fischertechnik

STEM: PREP

Physics, Robotics, Energy and Power

Featuring the fischertechnik Construction System

Written by Tom White & Associates
All rights reserved
©2015

Table of Contents

fischertechnik section 9
How Components Go Together 12
Pin and Groove 12
Girders and Rivets 14
Axles 16
Clip Axles 17
Snap Fit Parts 20
Angle Pieces: 21
Assembling the lights 22
Motor and Transmission 22
Using the Motor With the Propeller 23
Part Identification 24
Building a Simple Model 27
STEM: PREP Kit Contents 33
Teacher Section 48
Project Based STEM Education 51
Sketching and Documentation 53
Purpose of the Project: 53
Concepts: 54
Outline: 54
Assessment: 54
Essential Question: 55
Student Scenario: 55
Daily Plan: 55
Vocabulary: 57
Resources: 57
Simple Machines 59
Introduction: 59
Concepts: 60

Outline: 60
Assessment: 60
Essential Question 61
Student Scenario: 61
Daily Plan: 61
Vocabulary: 63
Resources: 63
Mechanical Systems 65
Introduction: 65
Concepts: 66
Outline: 66
Assessment: 66
Essential Question 67
Student Scenario: 67
Daily Plan: 67
Vocabulary: 69
Resources: 69
Structures: 71
Introduction: 71
Concepts: 72
Outline: 72
Assessment: 72
Essential Question: 73
Student Scenario: 73
Daily Plan: 73
Vocabulary: 77
Resources: 77
Conversion and Storage of Energy 79
Introduction: 79
Concepts: 80
Outline: 80
Assessment: 80
Essential Question: 81
Student Scenario: 81

Daily Plan: 81
Vocabulary: 83
Resources: 83
Basic Electricity 86
Introduction: 86
Concepts: 87
Outline: 87
Assessment: 87
Essential Question 88
Student Scenario: 88
Daily Plan: 88
Vocabulary: 89
Resources: 90
Electronics 91
Introduction: 91
Concepts: 92
Outline: 92
Assessment: 92
Essential Question 93
Student Scenario: 93
Daily Plan: 93
Vocabulary: 95
Resources 95
Optics 97
Introduction: 97
Concepts: 98
Outline: 98
Assessment: 98
Essential Question 99
Student Scenario: 99
Daily Plan: 99
Vocabulary: 100
Resources: 101
Digital Communication 103

Introduction: 103
Concepts: 104
Outline: 104
Assessment: 104
Essential Question 105
Student Scenario: 105
Daily Plan: 105
Vocabulary: 106
Resources: 107
Programming Control Systems 109
Concepts: 110
Outline: 110
Assessment: 110
Essential Question: 111
Student Scenario: 111
Daily Plan: 111
Vocabulary: 115
Resources: 115
Activities 117
Sketching Activity 118
Purpose: 118
Equipment: 118
Procedure: 118
Conclusion: 120
Linkage Diagrams 121
Mechanical Energy and Conservation of Energy 123
Purpose: 123
Equipment: 123
Procedure: 123
Conclusion: 125
Mechanical Energy and Conservation of Energy Answer Sheet 126
Purpose: 126
Equipment: 126
Schematics 130

Purpose: 130
Equipment: 131
Procedure: 132
Simple Circuit 132
Series Circuit 133
Parallel Circuit 134
Motors in Series and Parallel 135
Switches 136
Using switches 137
Schematics Worksheet 139
Schematics Worksheet Answer Sheet 141
Ohms Law and Power 144
Purpose: 144
Procedure: 144
Ohm’s Law Worksheet 146
Flow Charts 147
Purpose: 147
Equipment: 147
Procedure: 147
Conclusion: 149
BT Smart Controller 150
Introduction to ROBO Pro Light 151
BT Smart Controller Test 152
Connecting to the Computer 155
Open Loop Programming 157
Purpose: 157
Equipment: 157
Setting up the hardware: 159
Loops 160
Digital Branching 161
Adding the Motor 169
Sensors: Digital Phototransistor 174
Purpose: 174
Equipment: 174

Procedure: 174
Using the Phototransistor 176
Conclusion: 177
Engineering Documents 181
The Engineering Notebook 182
Design Process 185
Design Documentation 188
Problem Statement 190
Design Brief 191
TESTING PROTOCOL 192
Engineering Report 193
Assessment Rubrics 194
Literacy Rubric for Argumentative or Persuasive Project 195
Literacy Rubric for Informational or Explanatory Project 197
Sketching and Documentation Rubric 199
Simple Machines Rubric 200
Mechanical Systems Rubric 201
Structures Rubric 202
Conversion and Storage of Energy Rubric 203
Electricity Rubric 204
Electronics Rubric 205
Optics Rubric 206
Digital Communications Rubric 207
Programming Rubric 208

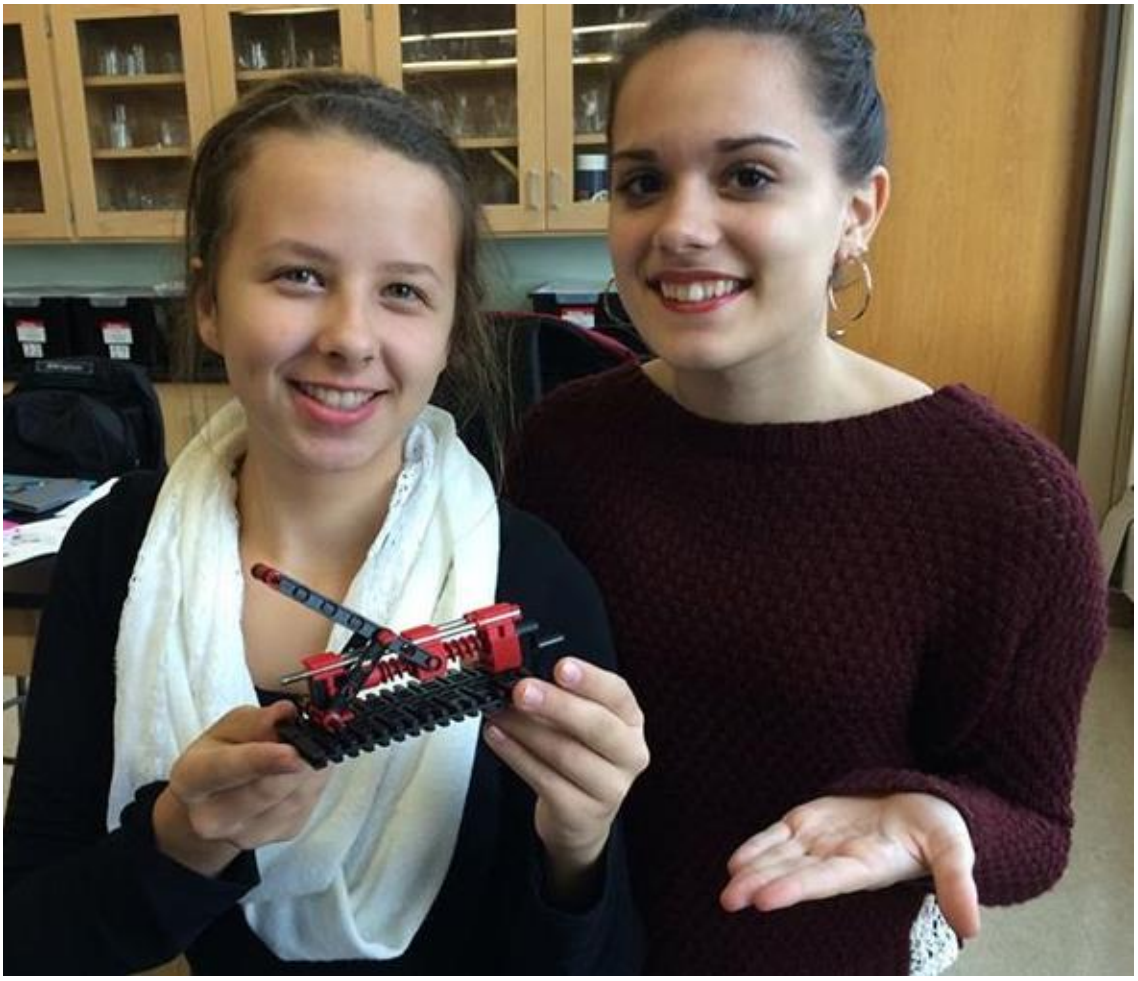

fischertechnik section

How Components Go Together	
Part Identification	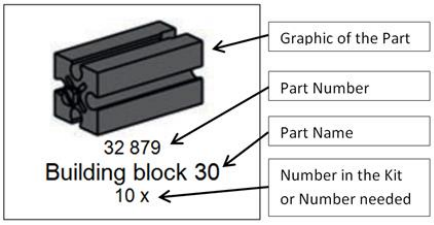
STEM: PREP Kit Contents	
Drive Systems	
Generator	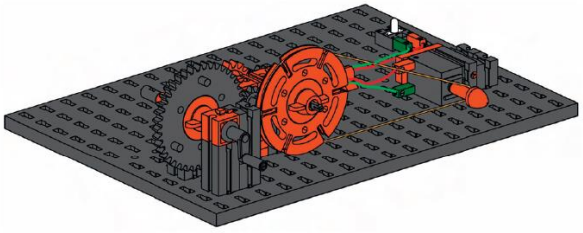

Green Energy	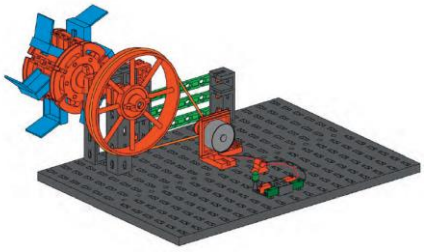
Pneumatics	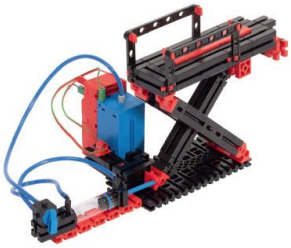
Mechanic & Statics	
Physics I	
Physics II	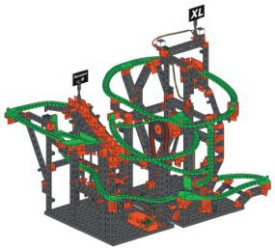

Electronics	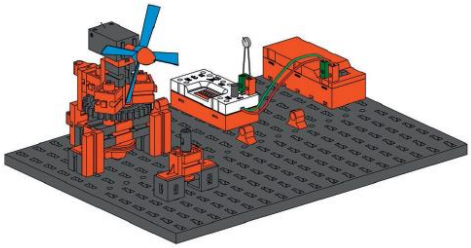
Optics	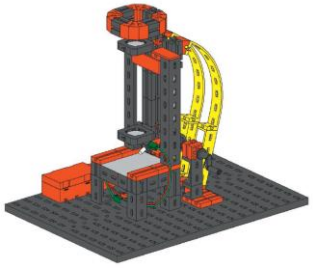
Introduction to Robotics Programming	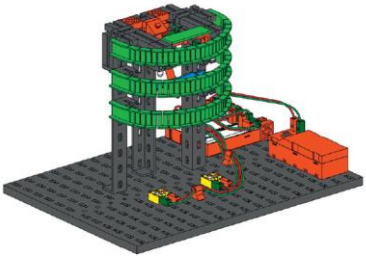

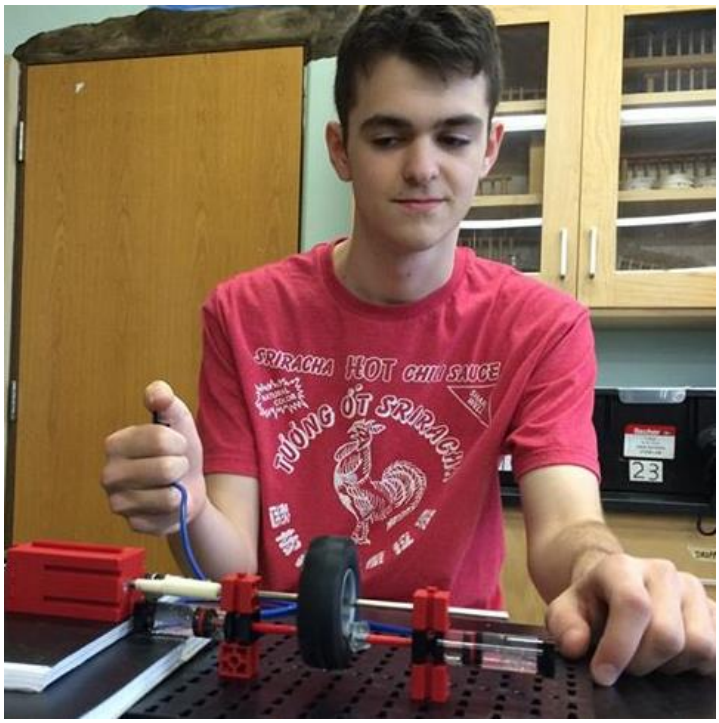

Back

How Components Go Together

The fischertechnik modeling system is a modularized system. This means that a reference dimension is used and then all the components are based upon the same dimension. With this building system 15mm is the base measurement. This makes them easier to assemble. The components fit together in a variety of ways depending on the design and what we want the parts to do when they are actually assembled.

Pin and Groove

The basic assembly is done with what is known as pin and groove. The pin (shown in the close-up below is wider at the end with a narrow neck.

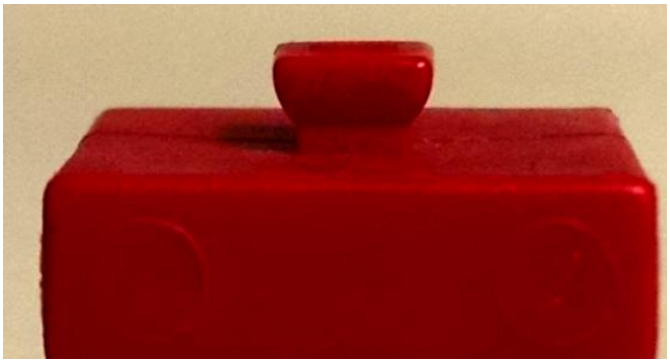

The Groove is shaped to accommodate the pin. It might appear as a circular path (left) or on some parts it might resemble a dovetail shape (right.

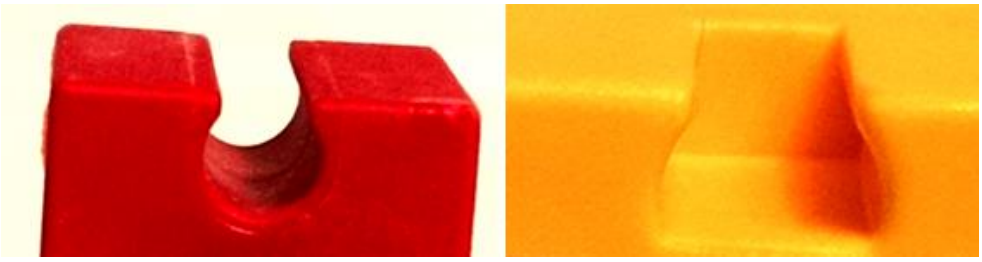

These fit snuggly together. The pins are designed to enter at a 90 degree angle and not allow the part to rotate.

The parts need to slide in from the end and then down the groove until the desired position is reached.

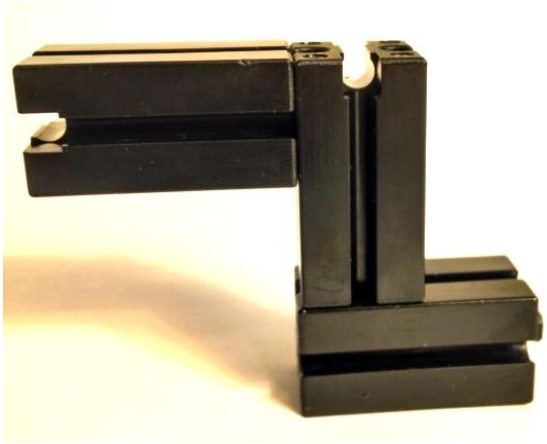

To remove the components they must be slid apart in the same manner they were put together with the part sliding to the end where the pin releases from the groove. Pulling straight out will damage the pin.

When a pin is needed on a component a part known as a spring cam is used. The spring cam is red and shown in the photo below. It is slid into the selected groove and positioned where needed. This allows you to place a pin anywhere in a groove.

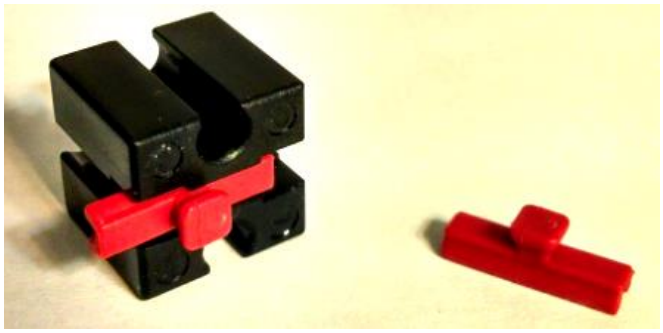

The picture below shows several different types of components that have been slid into the grooves of the baseplate.

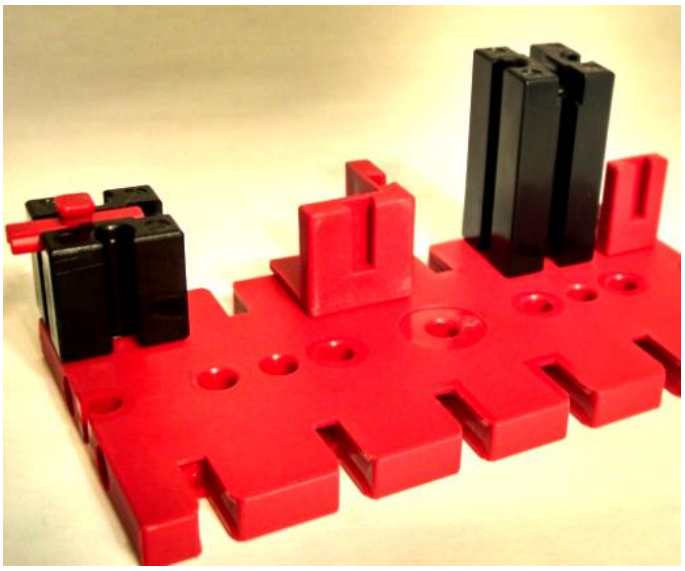

Back

Girders and Rivets

When building larger structure; girders, beams and struts are utilized to create the structure and add support to resist tension and compression forces. Rivets are used join the struts to the girders and to align the components. The ends of the girders and beams have the pin and groove system and the centers have a different type of shape.

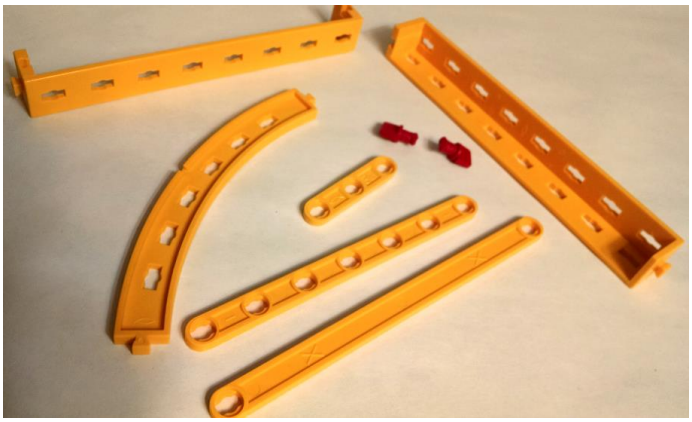

There are two sizes of rivets. The most common is the 4 mm rivet that is shown in the upper position. The 6mm rivet is used to join three components all together.

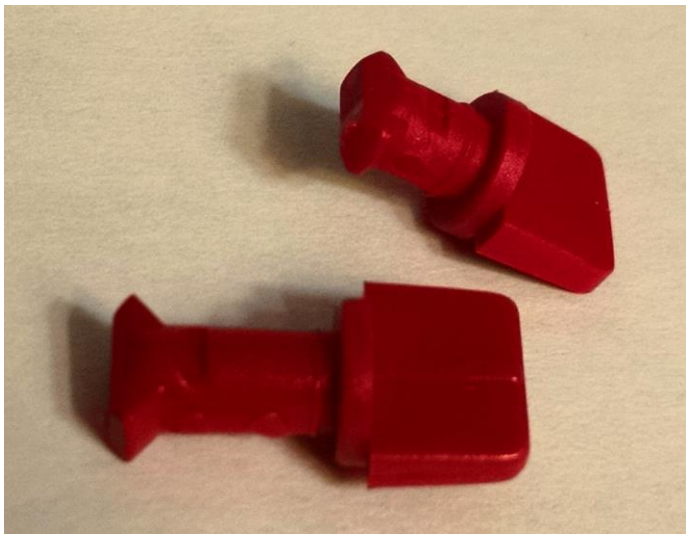

The rivets are shaped so they only pass through the shape in one position and then are rotated to make removing the rivet difficult.

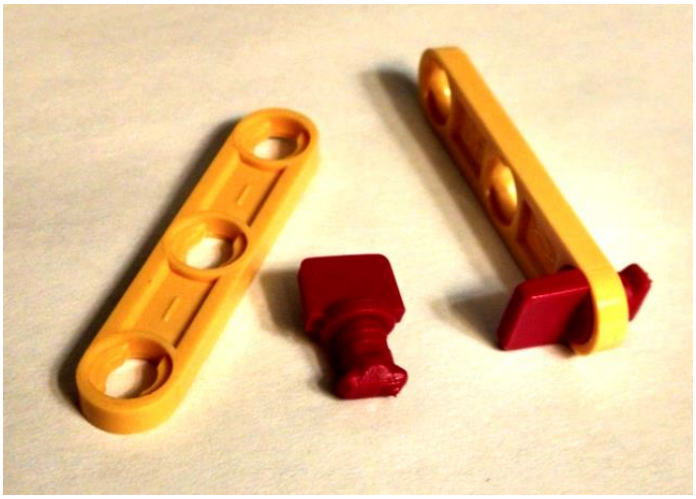

The rivet passes through a bore in a strut and then into the desired location on a girder of beam.

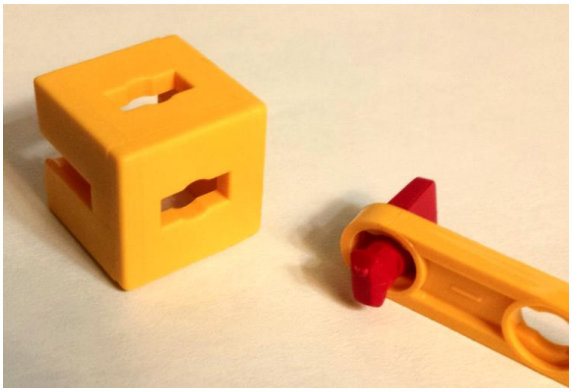

Once they are in the desired position the rivet is rotated 90 degrees to tighten the joint and to hold it in position.

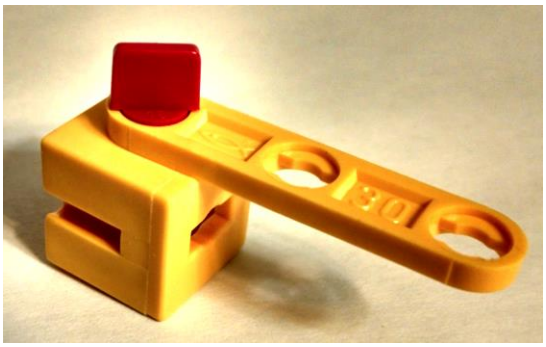

Back

Axles

When parts need to rotate axles are used. The axles need to be supported so special blocks are used. In the picture below the axle is passing through a 15mm building block with two pins and bore.

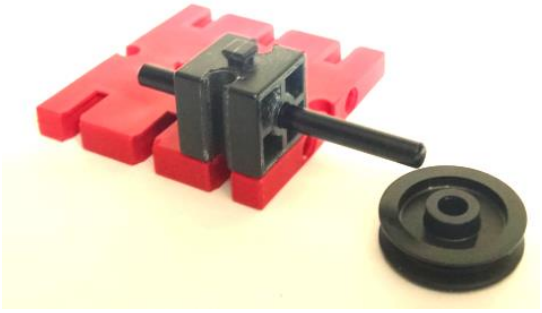

There are also times when we want to use objects besides a pulley on an axle. Hubs are used to allow soft objects such as tires to be utilized with the specially sized axles. The hubs are designed to push into the center of the tire and the friction fit keeps them aligned.

Back

Clip Axles

There are two major types of axles in use with the system. The smooth axle is shown in use above. Below is a picture of many of the clip axle components. These axles have a specially shaped end that makes joining components together much easier.

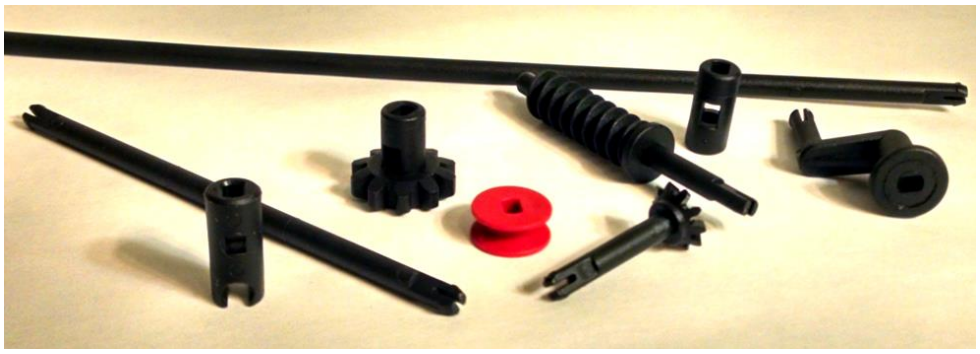

The special shape on the end allows the part to compress when entering the other component and then expand holding it firmly in place. The picture below shows the clip axle end on the bevel gear and the clip axle receptor on the cog wheel. The bevel gear is aligned and then slowly inserted into the cog wheel until a small click is heard. The remove the parts the force is directly reversed with a smooth pulling action to separate the components.

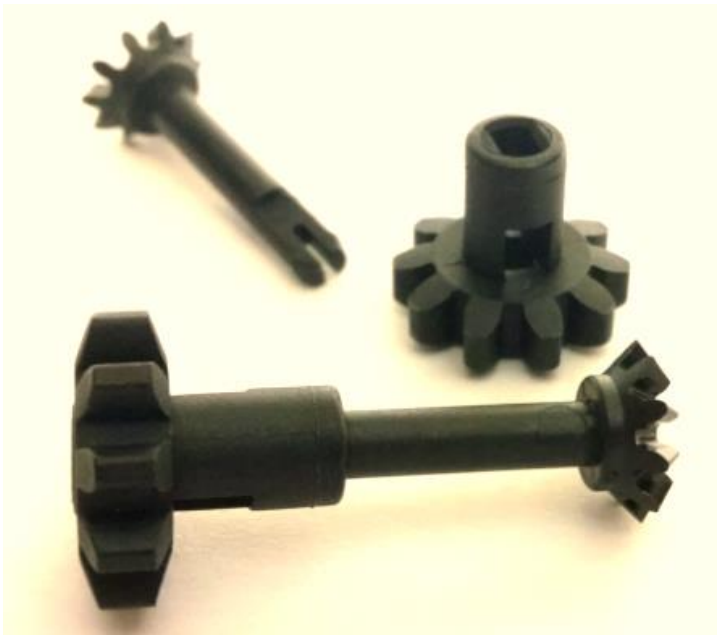

If we need to attach a component to an axle or make the system adjustable we utilize a component known as a collet. A collet is a type of chuck or clamp that forms a collar around the shaft. Pictured below are two different collet systems.

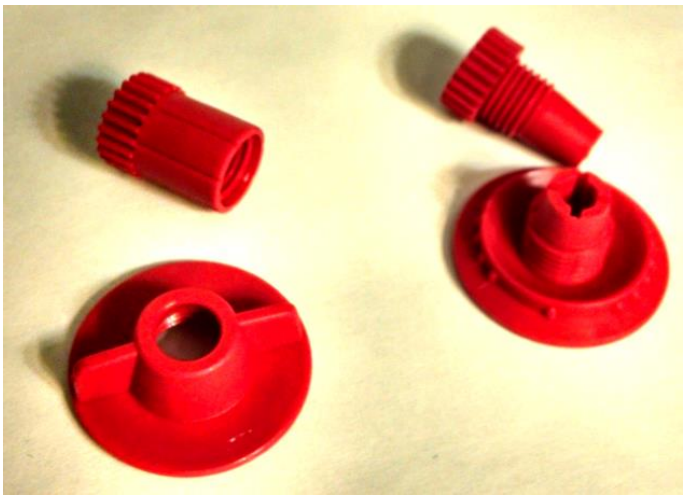

They consist of a threaded part that has separations in it. As the tapered cap is threaded onto the collet the sections of the collet squeeze together and clamp onto the shaft passing through the center. When the collet is lose the shaft is free to pass in and out. When the cap is tightened the movement ends and the shaft is caught in position. In the example below a collet is used to hold a gear in position on a shaft.

The gear is place upon the collet.

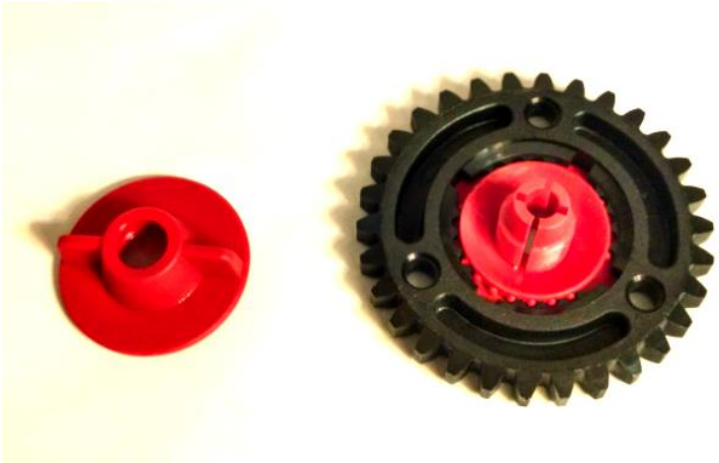

Notice the collet has notches on the outside to help the gear connect with the collet.

The cap is lightly placed on the axle and the entire assemble is slid into position and tightened. To adjust you will need to loosen the nut and then retighten the cap when it is exactly where you want it.

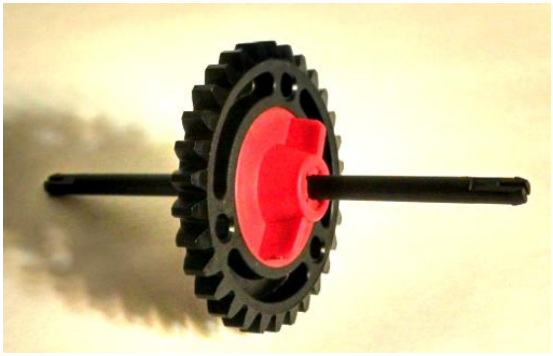

There are a number of gears, cams, pulleys, tires and other components that can be placed upon shafts in this way.

Below is pictured a different type of collet that is attached to a shaft.

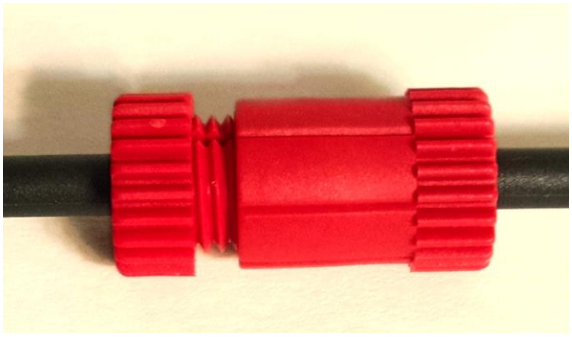

Back

Snap Fit Parts

There are some components that are just snapped together. The shape of the parts allows them to be pushed together and the once together remain in position. If they are not needed separately anywhere else you might consider leaving them together.

Below is the cable winch drum and cable winch frame.

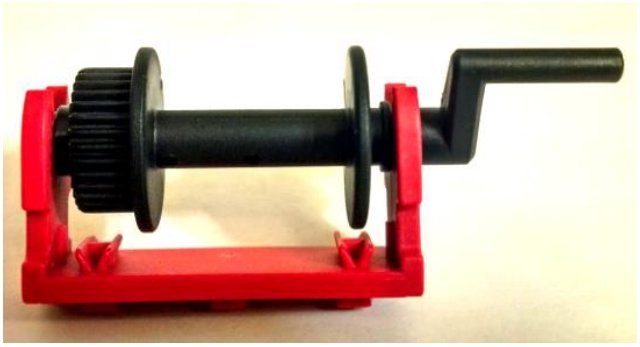

Hinge block and claw are commonly used together to allow movement in assemblies. Generally they are only used together.

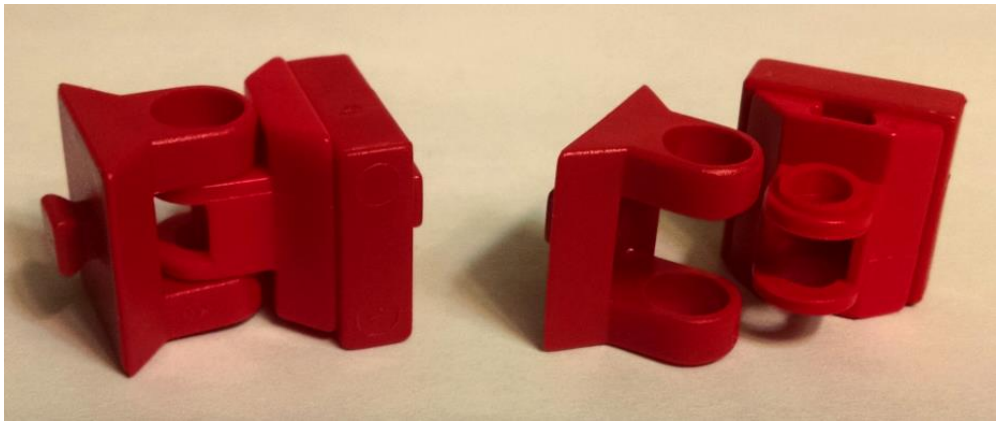

Another component that is joined in this way is the chain link. The links are set up so they are in the same position and then the long link is snapped into the shorter link. The chain is then used with gears for making drive trains. It is also commonly used with track links to make conveyor belts or caterpillar tracks.

Back

Angle Pieces:

In addition to square blocks the kit comes with angle blocks. There are four sizes 7.5, 15, 30 and 60 degree blocks. There is a number on one side of the block. This way you can visually check to see the angle of the block.

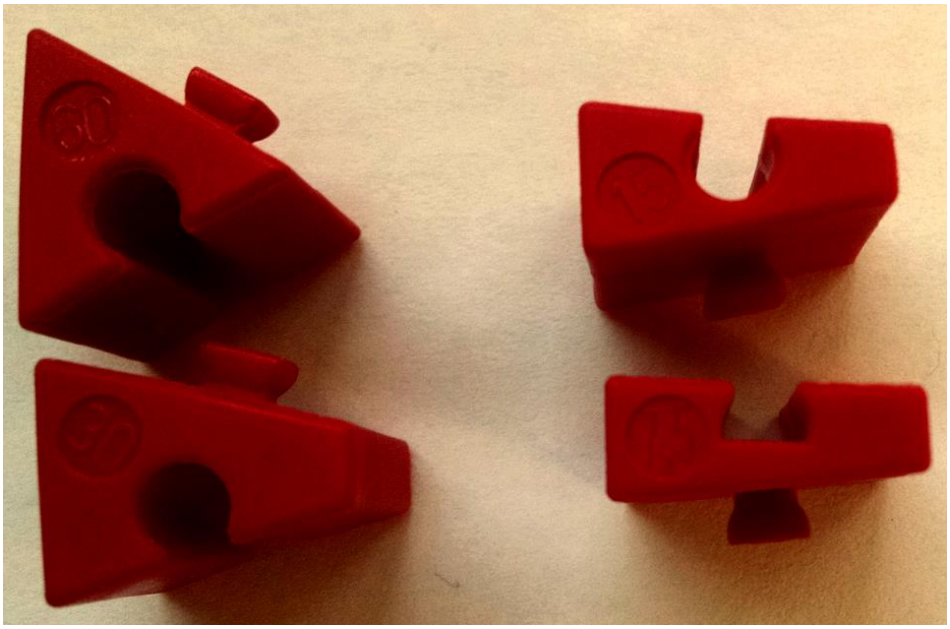

Back

Assembling the lights

The kit comes with two different kinds of lamps. They look very similar. The lens tip bulb has a heavy lens in the front and is in a grey socket shown in the left of the picture below. The regular bulb is in a white socket and has an even glass all the way around. The lens tip bulb can be used anywhere but when you are using the phototransistor you should use the lens tip bulb as it focuses the light.

Before using the lamps they must be inserted into a socket. In the picture below you can see the lamp and the socket. The lamp must be lined us so the wires on the sides of the bulb will contact the metal bars in the socket. The correct alignment is shown in the picture in the middle. Be sure the lamp if fully seated in the socket before using. See the picture on the right.

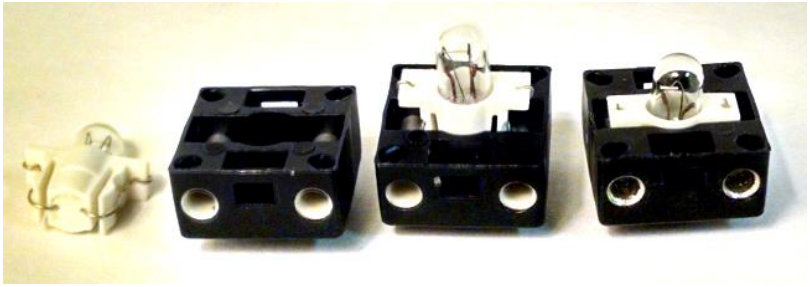

Back

Motor and Transmission

The motor has two long pins on the end with the worm gear. The transmission has two grooves on the end. These are shown in the left hand side of the picture below. The pins are slid into the long grooves as shown in the middle picture. The picture on the right shows the motor fully seated in the transmission. You can tell it is fully seated when the gears on the side no longer turn.

Sometimes the motor and transmission are used by themselves. Other times an additional clip axle with gear wheel is added. The clip axle can then connect to any clip axle coupling or device. The axle is inserted through the hole in the side of the transmission. The clip axle will click into place and the gears should be fully meshed.

Back

Using the Motor With the Propeller

Sometimes the motor is used without the transmission. This is the case when you are using the propeller. The propeller is assembled with the pointed adaptor for the propeller. The pointed adaptor slides over the worm gear on the end of the motor. Care should be taken that you slide the pointed adaptor evenly over the gear to keep it aligned.

Back

Part Identification

For each kit and project there is a list of necessary components. Each list is graphical and contains a wealth of information. This section will help you read and interpret the data presented. Every list contains a lot of parts and we have attempted to provide you with a lot of information about the parts and how they are used.

In the picture below you see a typical part.

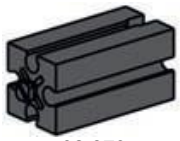

32 879
Building block 30
10 x

When you look at the part you will see four basic pieces of information shown in the graphic below.

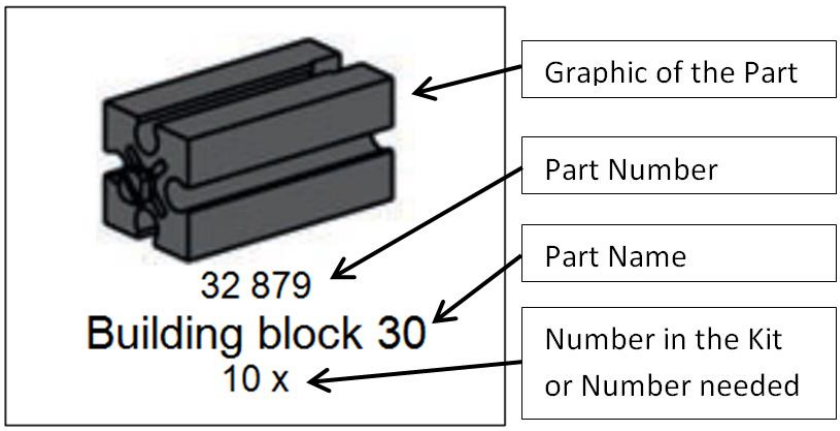

The graphic representation of the part is usually color accurate. Parts can be physically the same but a color change will give them a separate part number. The part numbers can be used to order spare parts and be sure you are getting exactly what you need. An exercise will have a parts list of what is needed for that specific section of the curriculum. Generally with young students the breath of parts can be intimidating and many experienced teachers will use the list to build small kits of just what is needed. This helps with getting all the parts back. Many people take the parts list and use those as labels for the various part bins for storage. The number of parts in the kit is the same, but the number needed for each exercise will change.

The part name contains a lot of information about the part. It is important to note that these components are modular in nature so you will see many of the dimensions follow patterns. In the pictures below you will see several examples of the naming conventions and what they mean.

 31 019 Large pulley 60 1 x	This large pulley is also 60 mm in diameter. The number after the name generally points to a size description	 36 336 X-Strut yellow 169,6 2 x	Struts are mechanical components used to resist compression forces. This one is 169.6 mm in length. In many parts of the world the comma is used to represent decimals.
 31 021 Gear wheel T20 1 x	This Gear Wheel has 20 teeth around the circumference. This knowledge comes in handy when combining with other gears to help calculate the gear ratio and mechanical advantage	 35 063 Clip axle 30 2 x	There are many parts such as this clip axle that come in various lengths. The length becomes important to models. This one is 30 mm.
 31 061 Link 30 2 x	This part known as a link can slide into the grooves between parts for a good fit. This one is 30 MM long.	 36 299 Angle girder 30 8 x	Girders are structural components. Each part has the length listed. This one is 30 MM
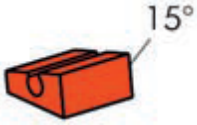 31 981 Angular block 15° 2 x	The angle blocks are each identified by the number of degrees between the surface with the pin (bottom of the part) and the surface with the groove (top of the part)	 37 238 Building block 5 with 2 pins 4 x	When a part is not in the traditional pattern it is noted in the name. For example this one is 5mm thick but has a pin on both faces
 32 064 Building block 15 with bore 7 x	This is a 15 mm by 15 mm block. The term “with bore” is used to let you know that an axle will slide through the bore and have freedom to rotate.	 37 468 Building block 7,5 6 x	This building block is half the thickness of the modular thickness
 35 049 Building block 15x30x5 with groove and pin 2 x	This building block is 15 mm wide, 30 mm long and 5 mm thick. It has a pin on one end and a groove the length of the other. It is handy for making adjustments to mechanisms	 38 258 Rope pulley 12 2 x	This pulley is 12 mm in diameter

When your students are following the instructions in the manuals you will see groups of parts listed with the step number. In the example pictured below you see there are three different kinds of parts needed for the step. The first part needed is the 30mm block and the students will use four of that part. Then three of spring cams and one of the of 15mm blocks will be used.

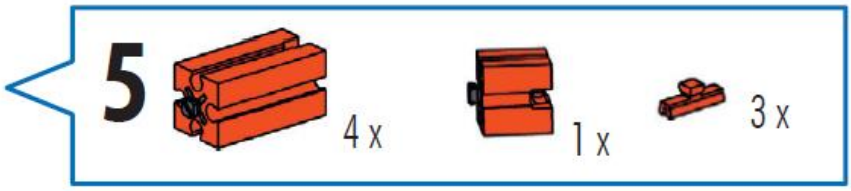

In the case where there could be confusion there is usually a graphic to assist you. In the example below you will see that a clip axle 75 is needed. The picture of the clip axle below the call out is actual size so student can get visual feedback they have the correct device.

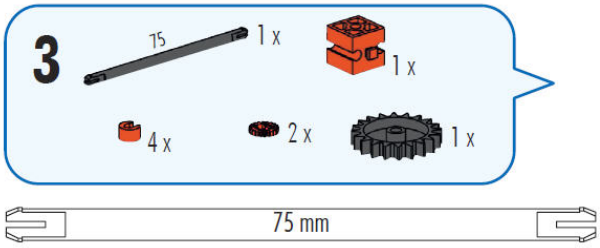

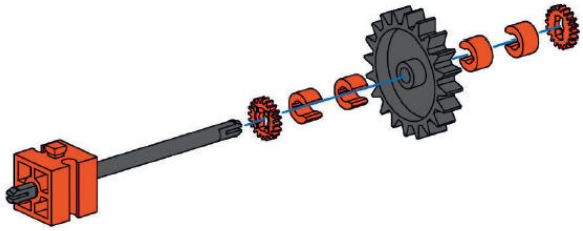

Back

Building a Simple Model

This exercise will help you understand how to build a simple model with the fischertechnik modeling system. The first step in building a model is to be sure you have the correct parts. This model will use the following parts.

 35 129 Base plate 120x60 1 x	 35 063 Clip axle 30 2 x	 35 088 Crank shaft 1 x	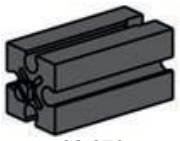 32 879 Building block 30 2 x
 32 064 Building block 15 with bore 2 x	 36 264 Gear wheel T30 1 x	 35 945 Cog wheel T10 1 x	 35 031 Flat hub collet 1 x
 31 058 Hub nut 1 x			

Once you have the twelve parts lay them out on the organizer above. There are three parts that you will need a quantity of two.

The first step is to take a building block 15 with bore and join this to a building block 30 by sliding the pin of the building block 15 with bore into the groove on the building block 30. A bore is a term we use for a really round hole.

Do that step a second time so you have two sets.

Set those aside and find the crank shaft and one of the clip axles. Set them next to each other on your table.

Line up the clip end of the axle with the opening in the crank shaft. Insert the shaft into the crank shaft. It will look like the picture below.

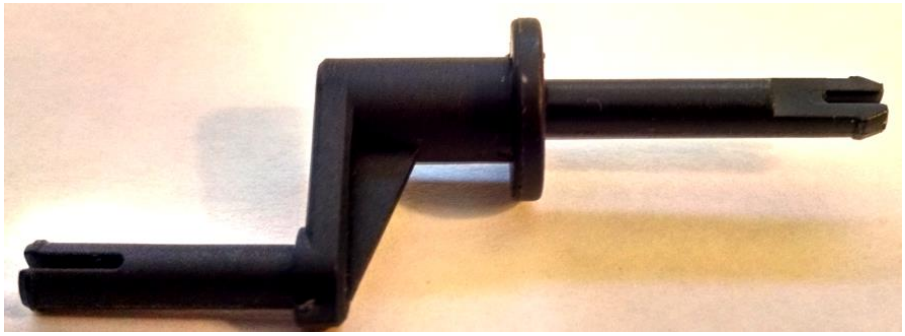

Take one of the sets of building blocks you created in the first step and a cog wheel. Place them on your table like the picture below.

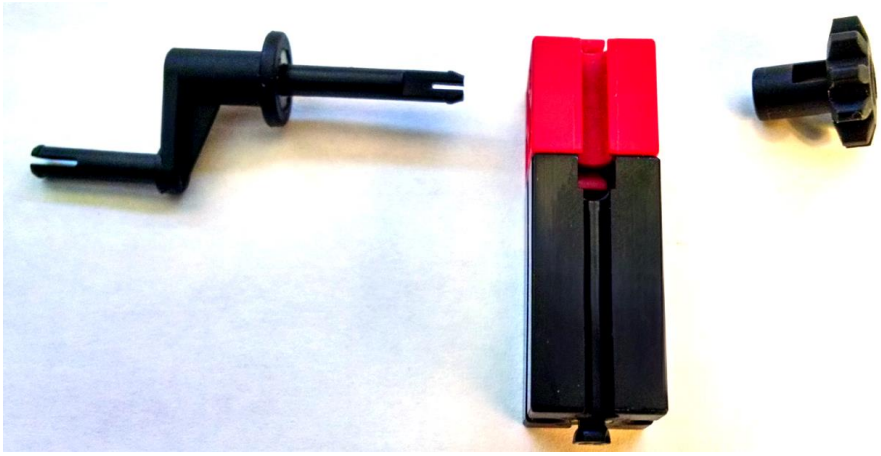

Slide the clip axle through the bore in the block. Insert the cog wheel on the other end of the clip axle. It should look like the picture below.

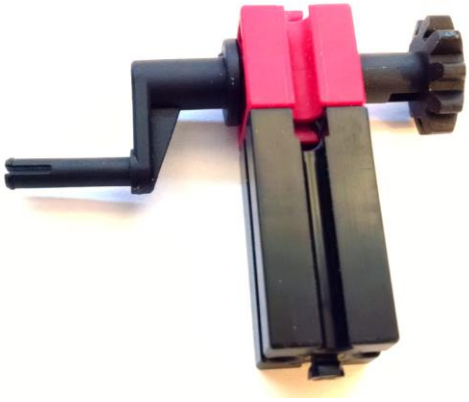

Find the base plate and place that on your table. Slide the end of the block 30 into the first short groove on the plate. Below are two views of the assembly so far.

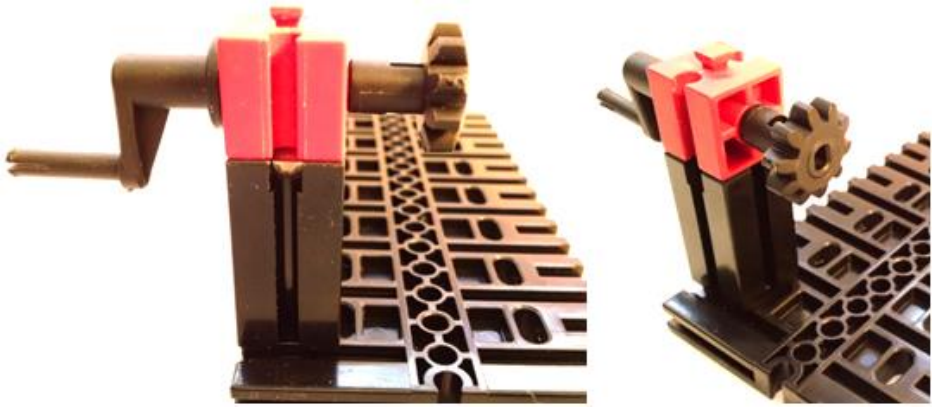

Now take the other clip axle, the gear wheel 30, the flat hub collet and the hub nut and place them on the table in front of you.

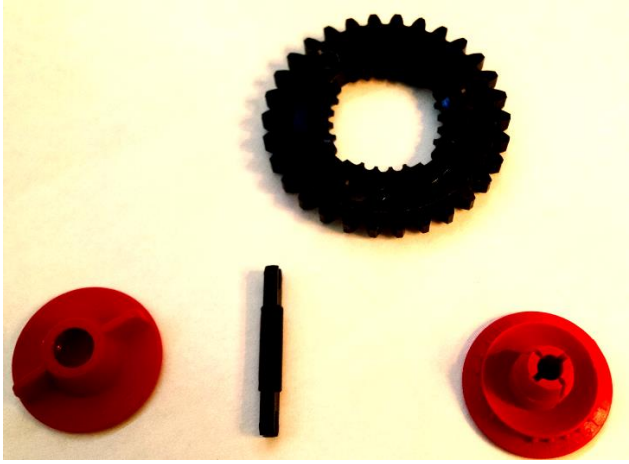

Place the gear wheel 30 on the flat hub collet. It should look like the picture below.

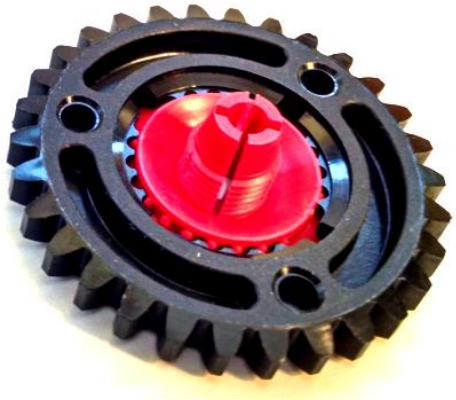

Now insert the clip axle in the center of the flat hub collet. The table will keep the axle from going all the way through the collet.

Place the hub nut over the axle and tighten the nut so it is tight and the axle will not move. Tighten it only with your fingers to prevent damage. Engineers call this finger tight.

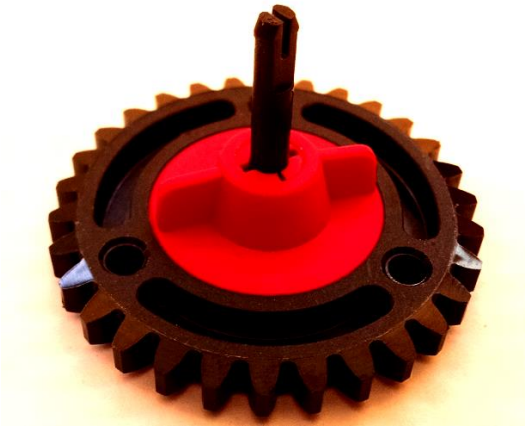

Now take the other block 30 and block 15 with bore that you put together before and add that to the base plate. Place this assembly in the third short slot on the base plate, leaving one short groove between the two block towers. Be sure the bore is facing in the same direction as the first assembly.

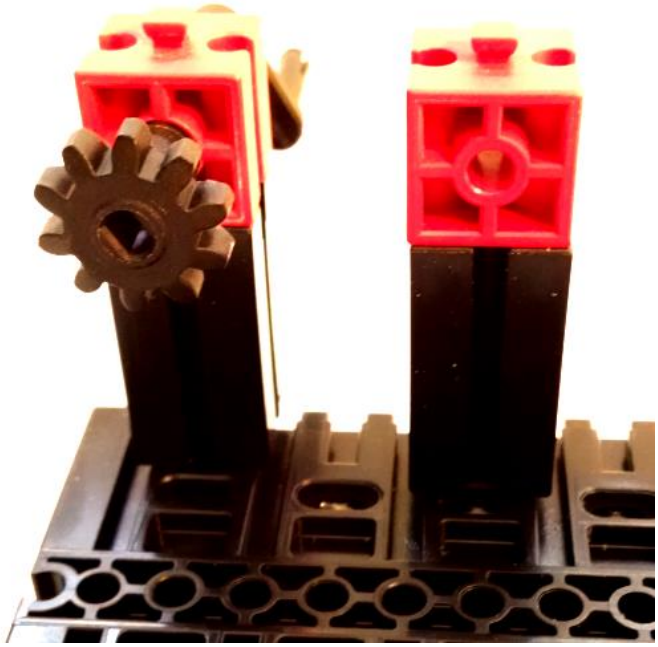

Insert the clip axle into the empty bore and line up the gears.

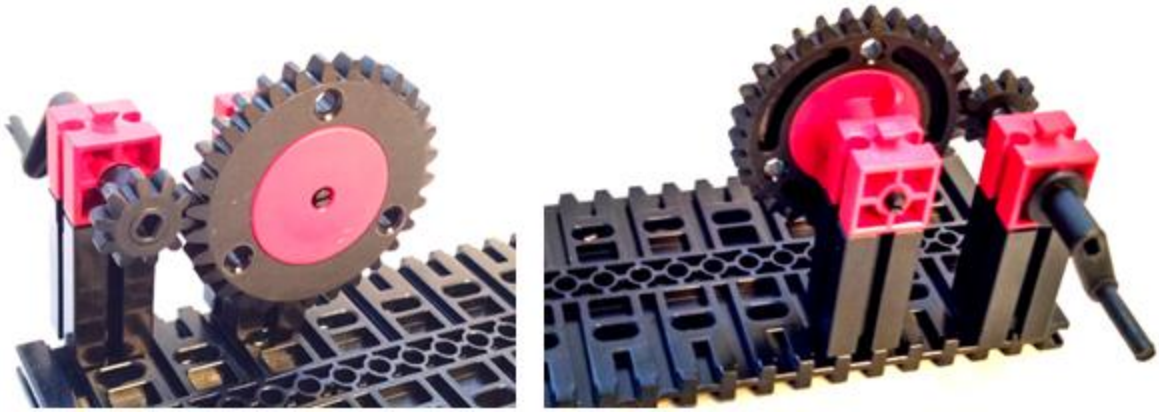

Your assembly is now complete. Turn the crank and observe what happens.

fischertechnik

STEM: PREP Kit Contents

 19 316 X-Strut Black 42,4 X1	 19 317 Spoke Wheel X1	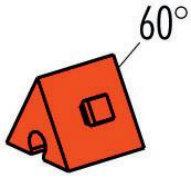 Angular Block 60 31 010 13	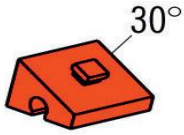 Angular Block 30 31 011 31
 Winch Drum 31 016 1	 Tire 45 31 018 4	 Large Pulley 60 31 019 2	 Clamping ring for rope drum 31 020 1
 Gear Wheel T20 31 021 2	 Gear Wheel T40/32 31 022 4	 Metal Axle 110 31 031 2	 Metal Axle 60 31 032 1
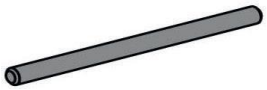 Metal Axle 125 31 036 1	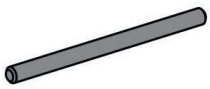 Metal Axle 90 31 040 1	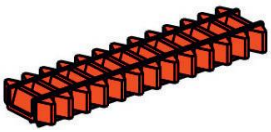 Rack M 1,5 31 053 2	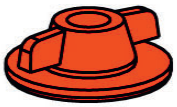 Hub nut 31 058 6

 Link 15 31 060 14	 Link 30 31 061 2	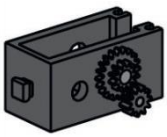 Motor reducing gearbox 31 078 2	 Clip axle with gear wheel T28, m=0,5 31 082 2
 Holding Axle 31 124 2	 Flat Plug Green 31 336 30	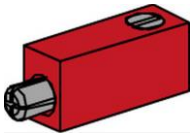 Flat Plug Red 31 337 22	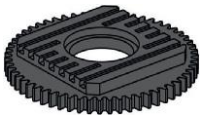 Turntable Top 31 390 1
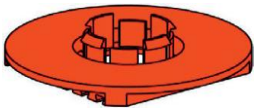 Turntable Case 31 391 1	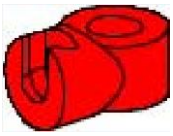 Adapter 31 422 4	 Hinged block tab 31 426 8	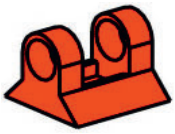 Hinged block Claw 31 436 11
 Sleeve Holder 31 592 4	 Spacer ring 31 597 8	 Skid 31 602 1	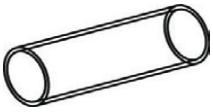 Cylinder tube 31 637 1
 T-Piece 31 642 3	 Connecting Strip 15 31 667 4	 Connecting Strip 21.2 31 668 4	 Angle-girth 31 670 4

 L-shaped lug 31 671 2	 Adaptor-girth 31 674 8	 Clip Axle 20 31 690 5	 P-plug 31 708 1
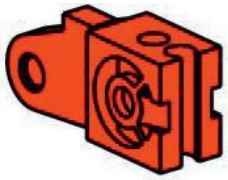 Steering block 31 843 2	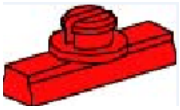 Strut Adapter 31 848 6	 Articulating Piece 31 888 2	 Spring baseplate 31 891 4
 Plastic Spring 31 892 4	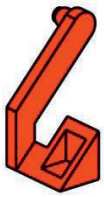 Wrist Pin 31 894 1	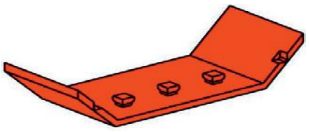 Mud Guard with pins 31 896 4	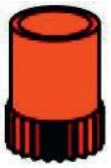 Hub nut 31 915 2
 Steering Wheel 31 916 1	 Angular block 60 with three grooves 31 918 1	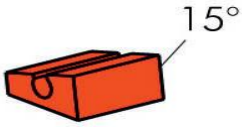 Angular Block 15 31 981 26	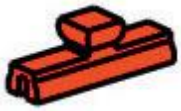 Spring Cam 31 982 68
 Sleeve 15 31 983 3	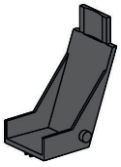 Bucket Seat 31 984 1	 Building block 15 with bore 32 064 32	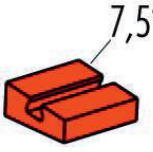 Angular block 7,5 32 071 29

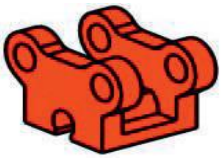 Roller Block 32 085 1	 I-Strut Yellow 75 32 200 12	 Steering Knuckle 32 228 2	 Tie Rod R30 32 229 1
 Steering wheel holder R 30 32 230 1	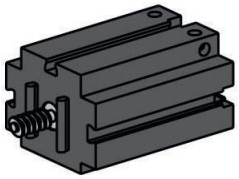 Mini Motor 32 293 1	 Connecting Plug 32 316 2	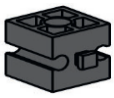 Building block 15 with counterbore 32 321 2
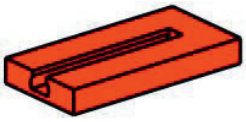 Building Plate 15x30x3,75 32 330 8	 Building block 15x15 32 850 15	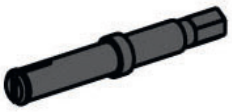 Steering column 32 851 1	 Steering column base 32 852 1
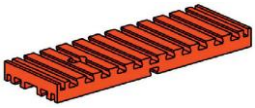 Bottom plate 30x90 Red 32 859 2	 Bottom plate 30x90 Yellow 32 861 4	 cable 1200mm 32 869 1	 Axle with clip 32 870 42
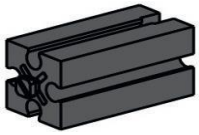 Building block 30 32 879 21	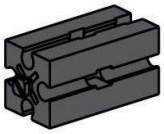 Building block 30 with bore 32 880 2	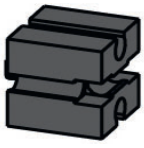 Building block 15 32 881 23	 Building block 15 with 2 pins 32 882 4

 Tire 50 32 913 2	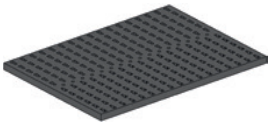 Base plate 258x186 32 985 2	 Tire 32.5 34 995 2	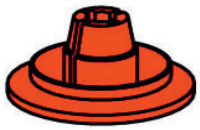 Flat hub collet 35 031 6
 Hub nut 35 033 4	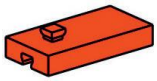 Building block 15x30x5 with groove and pin 35 049 42	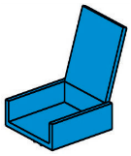 Seat 35 051 6	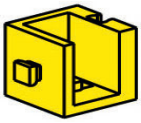 Angle girder 15 yellow 35 053 4
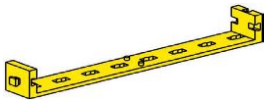 Flat girder 120 yellow 35 054 4	 X-Strut 106 Black 35 057 8	 X-Strut 106 Yellow 35 059 12	 I-Strut Yellow with bore 120 35 060 4
 Wheel axle with bevel gear 35 061 3	 Bevel gear with sleeve 35 062 2	 Clip axle 30 35 063 6	 Clip axle 45 35 064 4
 Clip axle 60 35 065 4	 Clip axle 90 35 066 3	 Steering column 35 067 1	 track rod hinged 35 068 2

 Cable winch frame 30 35 069 1	 Cable winch drum 35 070 1	 Worm 35 072 1	 Axle coupling 35 073 9
 Light cap red 35 079 1	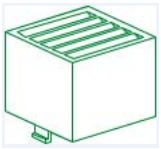 Light cap green 35 084 1	 Light cap transparent 35 086 2	 Clip axle 75 35 087 10
 Crank shaft 35 088 5	 Collet chuck 35 113 1	 Gear cube 35 115 2	 base plate 120x60 35 129 2
 4x80 Axle black 35 405 3	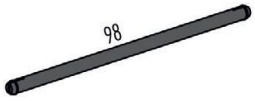 4x98 Axle 35 414 2	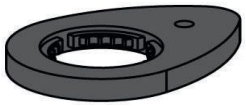 Cam plate black 35 466 1	 red wire 300 mm 35 608 1
 Inner toothed Gear T30 35 694 1	 Gear wheel T15 35 695 4	 Rope Pulley 21 35 797 2	 Cog wheel T10 m=1,5 35 945 6

 Reed contact and cable clamp 35 969 8	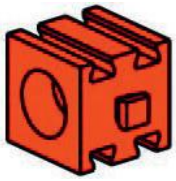 worm nut M1,5 35 973 1	 Clip axle with worm m=1 35 977 1	 Clip 35 980 2
 Steering claw 35 998 2	 Phototransistor 36 134 1	 Lead red/green 250mm 36 210 1	 Clip adaptor 36 227 14
 Chain link 11,5 red 36 248 220	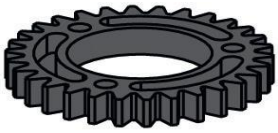 Gear wheel T30 36 264 1	 Angle girder 120 black 36 293 32	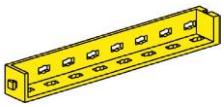 Angle girder 120 yellow 36 294 4
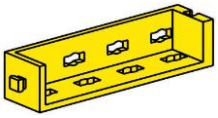 Angle girder 60 yellow 36 297 12	 Angle girder 15 with 2 pins yellow 36 298 6	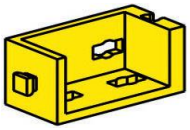 Angle girder 30 yellow 36 299 8	 Single rivet 4 36 323 76
  Single rivet 6 36 324 12	 X-Strut yellow 63,6 36 326 16	 X-Strut yellow 45 36 328 12	 Locking washer 36 334 15

 I-Strut Yellow 120 36 335 2	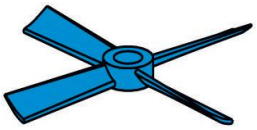 4-blade propeller 36 337 1	 X-Strut black 63,6 36 370 3	 Lead red/green 1000mm 36 382 1
 NTC resistor 1,5Kohms 36 437 1	 Screwdriver 36 443 1	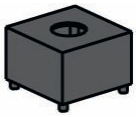 Masking light cap, hole 6,0mm 36 532 1	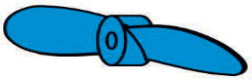 2 bladed propeller blue 36 559 1
 Axle sleeve 36 819 7	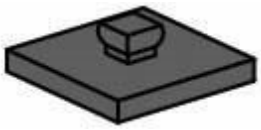 Mounting plate 15x15 36 911 2	 I Strut with bore, black 30 36 912 4	 I-Strut with bore, black 45 36 913 10
 I Strut black 15 36 914 12	 Angle connector 36 915 8	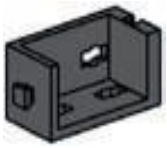 Angle girder 30 black 36 920 48	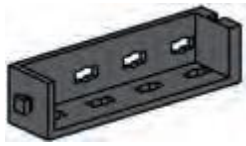 Angle girder 60 black 36 921 40
 Angle girder 15 black 36 922 47	 I-Strut with bore 75 black 36 923 4	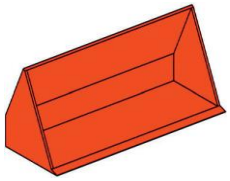 Shovel red 36 925 1	 Pneumatic hand valve 36 934 4

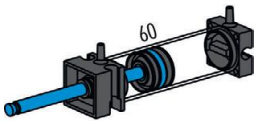 Pneumatic cylinder 60 36 938 3	 Angle girder 15 with 2 pins 36 950 26	 I-Strut with bore black 60 36 952 4	 Statics building block 36 973 9
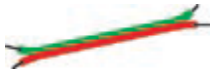 Lead red/green 300 mm 36 977 1	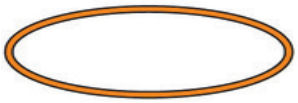 O-Ring 54x1,5 silicon 36 981 1	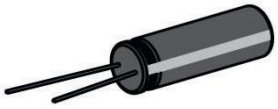 Gold capacitor 37 031 1	 Double sided adhesive strip 37 034 2
 Building block 5 37 237 71	 Building block 5 with two pins 37 238 12	 Building block 7,5 37 468 65	 Clip axle 180 37 527 1
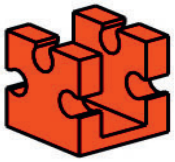 Roller bearing 37 636 4	 Clip 5 37 679 54	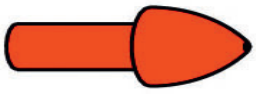 Pointed adapter for propellers 37 681 1	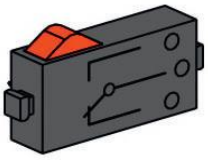 Mini Switch 37 783 2
 Locking worm 37 858 1	 LED White Assembled 162 134 2	 Light Barriers LED 162 135 2	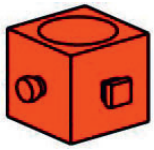 worm nut M1,5 37 925 1

 Worm m=1,5 37 926 3	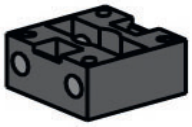 Plug in Light Holder 38 216 8	 Hook 38 225 1	 Mounting Plate 15x15 38 236 4
 Building block V15 Corner 38 240 70	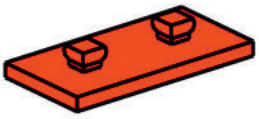 Mounting plate 15x30 red 38 241 21	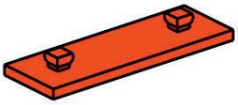 Mounting plate 15x45 red 38 242 5	 Mounting plate 15X45 yellow 38 243 5
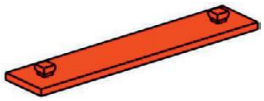 Mounting plate 15x75 red 38 244 3	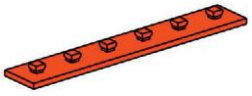 Mounting plate 15x90 red 38 245 3	 Mounting plate 15x15 red 38 246 18	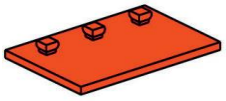 Mounting plate 30X45 38 248 4
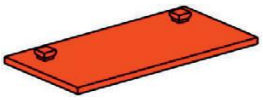 Mounting plate 30x60 red 38 249 1	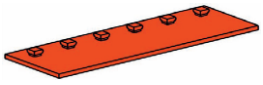 Mounting plate 30x90 red 38 251 2	 Rope pulley 12 38 258 2	 Coupling 30 38 260 4
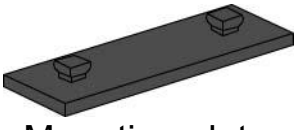 Mounting plate 15x45 38 261 4	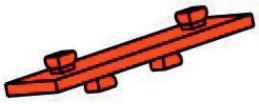 Building plate 15x45 with 2x2 pins 38 277 1	 Plastic axle 30 38 413 4	 Plastic axle 40 38 414 3

 Plastic axle 60 38 416 3	 Angular block 10x15x15 38 423 8	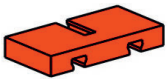 Building plate 15x30x5 with 3 grooves 38 428 17	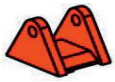 Articulated jaw for trailer coupling 38 446 4
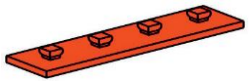 Mounting plate 15x60 with 4 pins 38 464 4	 Mounting plate 30x90 yellow 38 485 3	 I-Strut with bore 90 yellow 38 531 2	 I-Strut with bore 30 yellow 38 538 4
 I-Strut with bore 45 yellow 38 541 4	 X-Strut 42,4 Yellow 38 542 4	 I strut with bore, black 90 38 543 1	 I-Strut Yellow 15 38 544 4
 I-Strut with bore 75 yellow 38 545 4	 I-Strut with bore 120 black 38 546 18	 LED Green 5mm 68 451 1	 Freewheel hub black 68 535 1
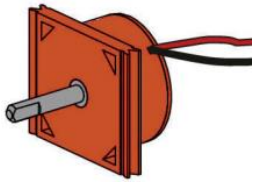 Solar Micromotor 156 494 1	 Tractor tire 80 106 766 4	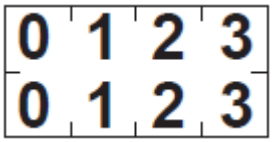 0 1 2 3 0 1 2 3 Number Stickers 114 175 1	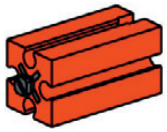 Building Block 30 red 116 251 12

 Building Block 15 Red 116 252 5	 Wheel Rim 30 Silver 116 913 2	 X-Strut Black 169,6 119 753 2	 Magnetic ball holder 119 850 3
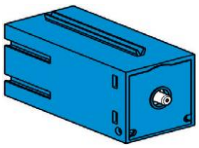 Air Compressor 9V 121 470 1	 Hose connection, Compressor 121 640 1	 Tractor tire 60 121 661 2	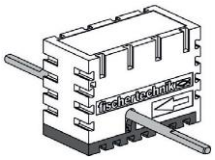 Pullback motor 122 267 1
 Pneumatic Hose 3000mm 122 363 1	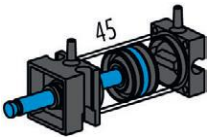 Pneumatic cylinder 45 122 641 1	 Clip wheel rim 43 122 646 4	 Cylinder tube 44 with head 122 647 1
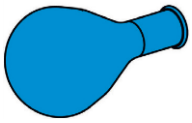 ft-balloon 122 648 1	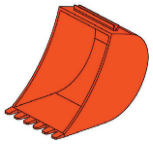 Dredger bucket 122 649 1	 Servo Lug 122 900 1	 Rubber band 122 950 1
 Stickers 123 052 1	 Sail Pattern 123 536 1	 Decals 123 539 1	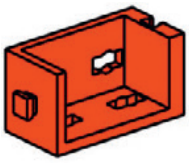 Angle girder 30 127 472 15

 Clip Axle with Mounting plate 130 593 5	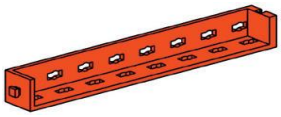 Angle girder 120 red 132 223 4	 Spring 132 875 2	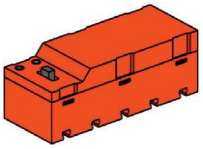 Battery holder 135 719 1
 Clip Pulley 136 775 1	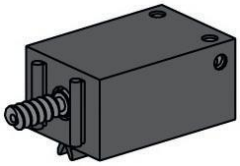 Motor XS 9V 137 096 1	 O-Ring 108 137 103 1	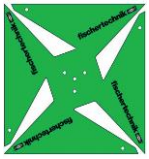 Windmill 137 357 1
 Clip Chain wheel T20 137 677 4	 20 cm hook up wire 141 426 2	 30cm hookup wire 141 427 3	 Tire 142 251 1
 Wheel Rim 20,5x12 143 231 1	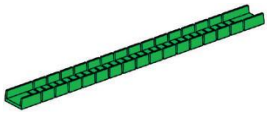 Flexible rail profile Green 143 234 31	 I-Strut with bore 30 Green 143 235 4	 I-Strut with bore 90 Green 143 236 14
 Steel Ball 144 262 12	 Adaptor for Solar Motor 145 416 1	 Lens Biconvex 145 860 2	 Lens holder Bioconvex 145 862 2

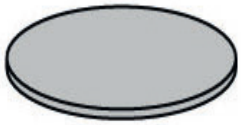 Lens Plano-convex 145 863 1	 Lens Holder Plano-convex 145 864 1	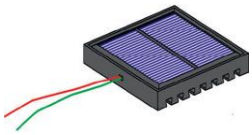 Solar Module 146 142 2	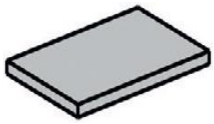 Reflecting Plate 146 373 2
 Styrofoam ball D20 146 374 1	 Styrofoam ball D50 146 375 1	 Tracing paper Optics 146 376 1	 Fiber Optic 146 377 1
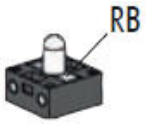 Rainbow LED Assembled 162 136 2	 I-Strut with bore 15 Green 146 529 4	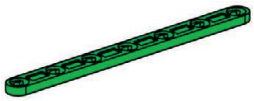 I-Strut with bore 45 Green 146 531 4	 I-Strut with bore 60 Green 146 532 4
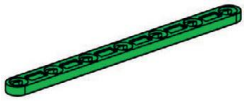 I-Strut with bore 120 Green 146 533 12	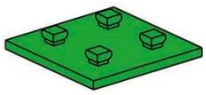 Mounting Plate 30x30 Green 146 534 3	 Wheel 23 Silver 146 535 2	 Template for Optics 146 876 1
 Green Wire 300mm 147 009 1	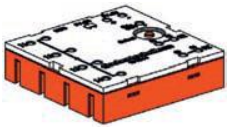 BT Smart Controller 147 225 1	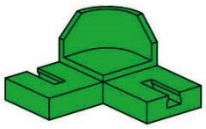 Corner 151 715 5	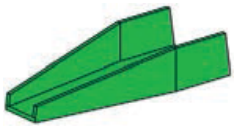 Chute 151 716 2

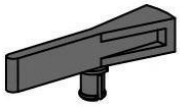 Splitter 151 717 1	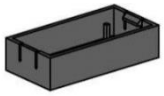 Case for Transistor holder 152 059 2	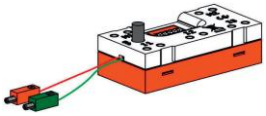 Electronics Module 152 063 1	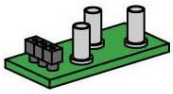 Transistor holder 152 218 2
 plug in capacitor 152 219 2	 Plug in resistor 100K 152 220 2	 Plug in Resistor 10K 152 222 1	 LED 152 223 2
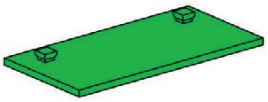 Mounting plate 30x60 Green 152 249 4	 Sticker 152 657 1	 Transistor 152 860 2	 Green Wire 3000 mm 152 948 1
 Red Wire 152 949 1	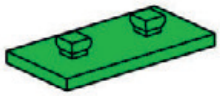 Green Mounting Plate 15X30 156 504 7	 LED Light 162 135 2	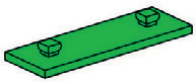 Green Mounting plate 15X45 163 041 5
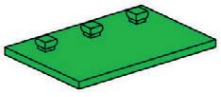 Green Mounting Plate 30X45 163 042 2	 Chain Wheel T20 31 779 2	 Track Link 31 790 44	 Chain Link 128 659 90

Back

Teacher Section

Project Based STEM Education	
Sketching and Documentation	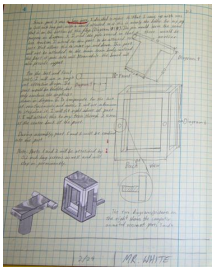
Simple Machines	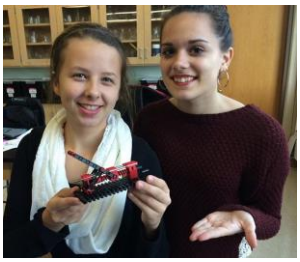
Mechanical Systems	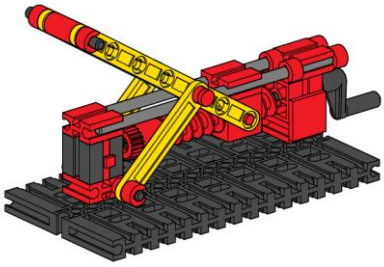
Structures	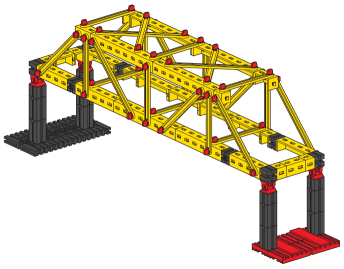

Conversion and Storage of Energy	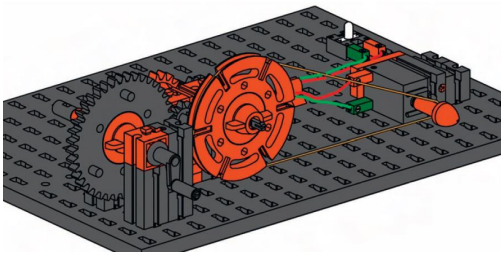
Basic Electricity	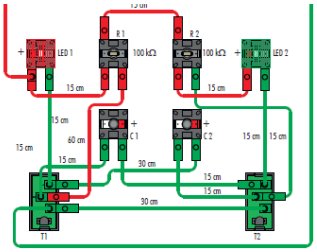
Electronics	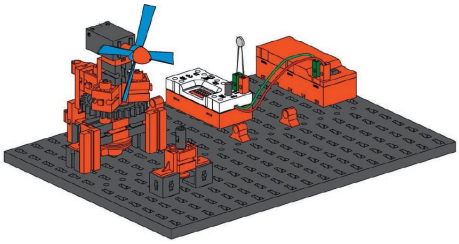
Optics	
Digital Communications	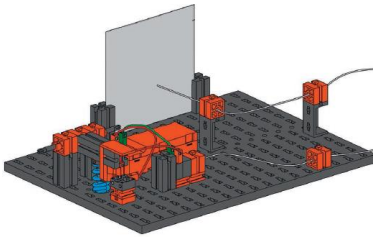

Robotics	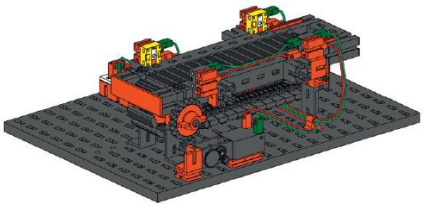

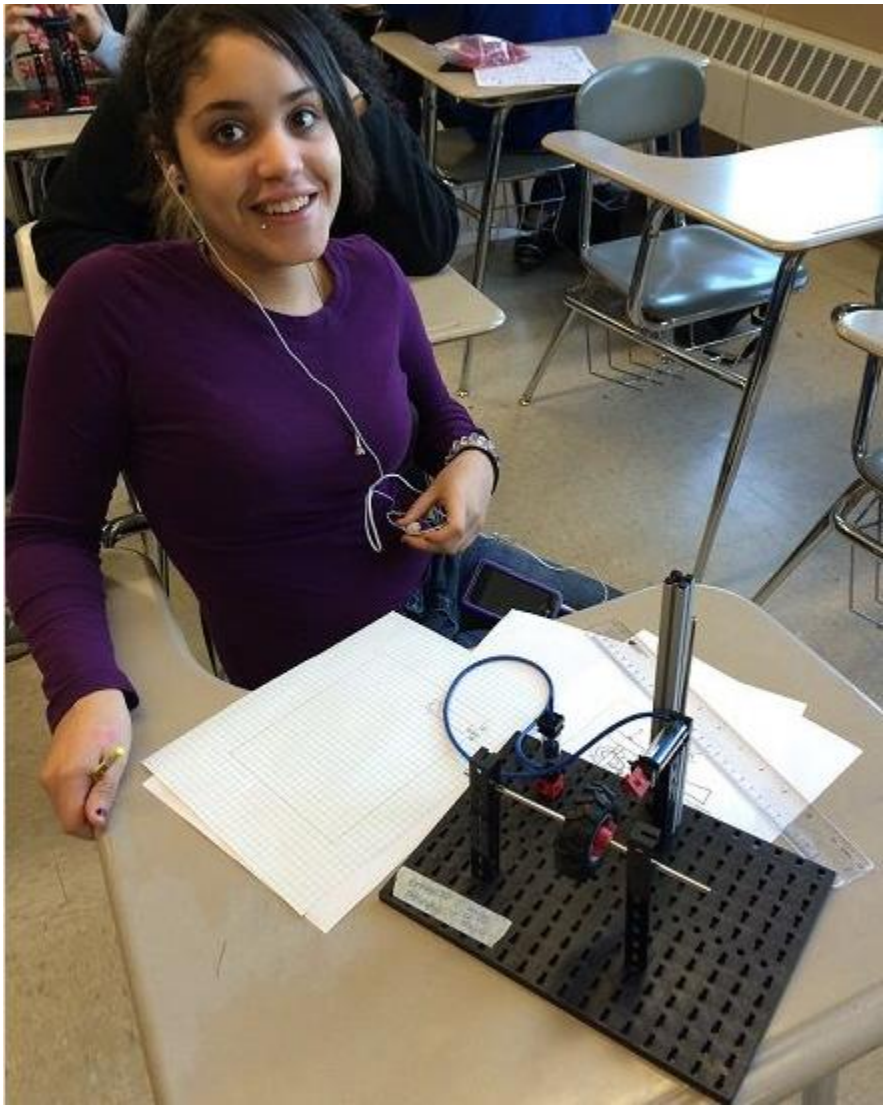

Back

Project Based STEM Education

One of the many benefits of STEM education is the integration and application of cross curricular content. This allows students to understand the relationship of the subjects they study. To be effective a STEM program needs to be fully integrated. The easiest and best way demonstrated so far is with a comprehensive project based curriculum. This helps students answer the questions “Why do I need to know this” and “Where will I ever use this”.

Project based curriculum allows for deep exploration of a problem. The project should be designed to allow different student groups to develop several and distinct solutions to the same problem. The problem presents the student with an opportunity to plan, organize and conduct research. Enabling activities can provide students with needed skills and knowledge “just in time”. Students utilize their research in the design, prototyping, testing, evaluation, and redesign of a solution.

The term engineering implies a mathematical evaluation of a design. This analysis allows students to create mathematical models that can inform decisions and increase the speed at which a solution can be put forth. Once the initial analysis is done a prototype can be created and evaluated. The data is gathered and organized. Flaws are further analyzed and the design improved.

Once an acceptable design solution is reached student create final documentation. This documentation includes sketches, drawings, notes, research reports, data analysis and anything else utilized in the creation of the final design. Students craft explanatory or argumentative writing to explain the merits of their solutions. The writing is glue for the integration of the learning. Having to explain the solution takes the learning to higher levels.

True project based curriculum needs to be standards based, utilizing several standard sets. College and career readiness science standards will be in place this year as a companion to the existing College and career readiness Math Standards. There is a temptation to ignore the literacy standards as they do not appear in the STEM designation. They are as important as the College and career readiness Math standards. Reading and Writing Standards for Literacy in History/Social Studies, Science, and Technical Subjects prepare students for further education and entering into employment.

One of the biggest impediments to successful preparation for careers in STEM fields is the need for remediation before true college work can begin. Project based STEM education provides students with the preparation necessary for successful entry into college programs. Several colleges are conducting studies of their students who have participated in STEM programs in high school. They find higher GPA, better retention and better preparation for the rigors of college study.

Back

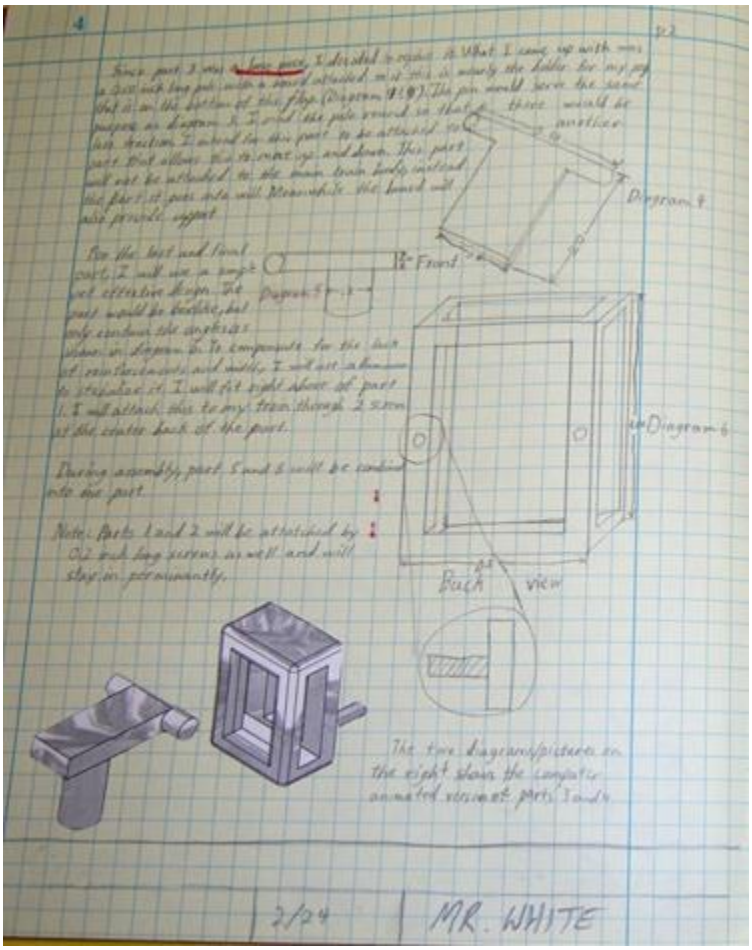

Sketching and Documentation

Purpose of the Project:

The purpose of this project unit is to introduce students to basic sketching and documentation techniques utilized as the primary mode of communication in the initial stages of the design process. This project focuses on some of the fundamental skills used in freehand sketching. Students will become familiar with type of lines and what they represent. They will explore the design process and sketching's role in that process. During this course students will frequently use sketching techniques in their engineering notebooks to convey their ideas.

The research and learning activities are designed to help students:

- Explain the of sketching in the design process
- Create sketches utilizing basic shapes such as lines circles and ellipses

- Communicate ideas to a group through the use of sketches and other documentation
- Understand the difference between isometric and orthographic sketches
- Utilize sketching techniques to aid in the design process

Concepts:

- Sketches are used to aid in creative thinking and to communicate ideas
- Sketching is frequently used to document original thought for future reference
- Design is an iterative process and there are many methods used to create and document ideas
- Lines form shape, value, color texture and space are all utilized to communicate and collaborate

Outline:

Documentation
- Engineering Notebook
- Documenting computer programs
- Documenting research

Sketching
- Line types
- Isometric
- Orthographic
- Dimensioning

Assessment:

Assessment comes in both formative and summative. It is an integral part of quality instruction. During the course of the projects one of the teacher's main functions is to work with student groups, keeping track of progress and providing formative assessment in the form of feedback and promoting reflection on the part of students. The focus should be on lifetime and 21st century skills. The goal of instruction is to promote abilities in research, problem solving, design, experimentation, testing and collecting data.

Rubrics are used in the assessment process to communicate expectations of quality of a task. Rubrics should be shared with students at the beginning of a project so they can clarify any misconceptions before beginning work. They can then build the skills and gather knowledge to solve the problem presented to the expectations of excellence described.

General Rubrics for Literacy tasks:
Argumentative_Pursuasive
Informational_Explanatory

Individual Project Rubric:
Sketching and Documentation Rubric

Essential Question:
How do I document an original idea so I can communicate with others easily?

Student Scenario:
You are a designer working for the Fischertechnik Company. The company has asked you to work with a client who needs some specialty parts created. Your supervisor would like to see ideas for a proposed design for a new building block. Your supervisor has asked you to sketch out some possible designs and present them to the design team for comment.

After conducting research on sketching techniques and participating in enabling activities you will select a part that does not exist and sketch out several variations. You will need to identify how it will connect with the rest of the building system, identify the material and select the proposed color of the proposed part. You will be responsible for giving a short presentation about the part using your sketch to highlight the points you wish to make.

Daily Plan:
Day 1
Key Question: What are the expectations for this project?

Introduce students to the main problem by providing them with the Essential question and the project description
Cover with your students the design process, engineering notebook and design documentation requirements. Discuss the problem statement design brief, testing protocol and management plan. Review the elements of a good engineering report.

Have the students form teams of two. Allow the students five minutes to discuss the problem. Students begin brainstorming ideas in their engineering notebooks. The teacher will provide a list of vocabulary terms that students will need to research. Student teams can break the lists up and determine how to define the terms.

Day 2
Key Question: Is there only one design process?

The teacher leads a discussion of how an object that the students are familiar with might be designed. Students break into groups and spend 10 minutes in discussion and then create a quick diagram of their process.
The teacher has the students view the webpage: NASA Engineering Design Process.
Once the students have viewed the page they return to their groups and compare their results with what NASA designed.
If there is time students can search out other design processes.

Day 3-4
Key Question: How do we properly communicate with sketching?

The teacher reviews the design process from Day 2 with the idea of generating ideas through sketching.
The teacher demonstrates how isometric sketches are created. The Teacher can use resources found by searching for isometric sketching.
The teacher will review drawing in isometric views. The teacher can use isometric graph paper to help student visualize what the sketch should look like. The template for Isometric graph paper can be downloaded from http://www.printfreegraphpaper.com/.
The teacher gives each group of students a die from a set of dice.
The teacher has the students draw an isometric sketch of the die including the dots on each face. Students save the sketch in their engineering notebooks.

Day 5-7
Key Question: How can I show detail on a surface?

The teacher reviews what the students had drawn.
The teacher introduces the orthographic sketching concepts. The teacher can use resources found by searching for orthographic sketching.
The teacher will introduce the sketching activity have each student sketch a fischertechnik 30 mm building block in their engineering notebook. The sketches should have notes and any other necessary descriptors. Students should show instructor when completed and insert into their engineering notebook.

Day 8-9
Key Question: How much information is really necessary to include in a sketch.

The teacher begins by reviewing various sketching techniques the students have learned. Students discuss other information that should be included in sketches.

The teacher introduces the sketching activity. The teacher should have prepared several objects made from different fischertechnik pieces before the students arrive. (an alternative is to have each student team build a model of miscellaneous parts that will be given to a second team to sketch, and reconstructed by a third team.) All the objects should be different. An object created from several different fischertechnik pieces is hidden behind a screen so that only the team working on the sketch will be able to see it. Teams will have 20 minutes to view the object and sketch out as much information as they can without removing the object. Partners must each create their own sketch.

Student teams are then forbidden to look at the object again. The student teams utilize the drawings they each created to create one sketch that will be given to another team who will then have to recreate the object without asking questions

or seeing the original model. The new models are compared to the original to see how accurate the process was.

The students should comment in their engineering notebooks about the information that they needed in their sketch to solve the issue. Students should also comment on what they wish had been included on the sketch they used.

Day 10-11
Key Question: How do we organize our thoughts on paper?

The teacher will discuss a student scenario where a team of students will sketch out their design to submit to Fischertechnik pertaining to a new building block that does not exist yet.
Students will examine some fischertechnik blocks and see how they interconnect.
The teams of students will brainstorm their new designs. The teacher should encourage different sketching techniques and annotations. Students may also wish to sketch how their new block might link to existing blocks.

Day 12
Key Question: How do we convey our ideas?

The teacher outlines the options students have for their presentations. Teams decide how to best present their material.
Students present their solutions to the class one at a time. At the end students reflect on their work and how they would have improve their designs

Vocabulary:

Annotated sketch
Brainstorming
Center Line
Design process
Engineering notebook
Hidden Line
Isometric sketch
Isometric Graph Paper
Multi-view sketch
Object Line
Orthographic

Resources:

Websites:

Engineering notebook:
http://www.wisegeek.com/what-is-an-engineering-notebook.htm
Engineering sketching:

http://www.me.umn.edu/courses/me2011/handouts/drawing/blanco-tutorial.html#isodrawing
http://www.youtube.com/watch?v=KN7281MUp_U
http://www.youtube.com/watch?v=ZBuhGaGPYfQ
http://www.technologystudent.com/designpro/isocube1.htm

Department of Labor:
http://www.bls.gov/bls/topicsaz.htm
http://www.mynextmove.org/

Back

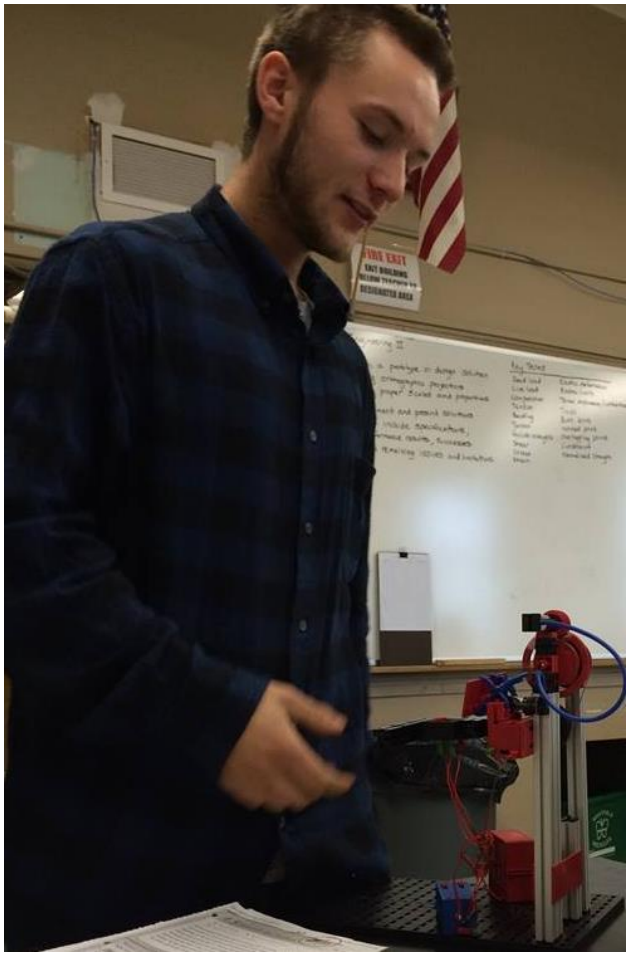

Simple Machines

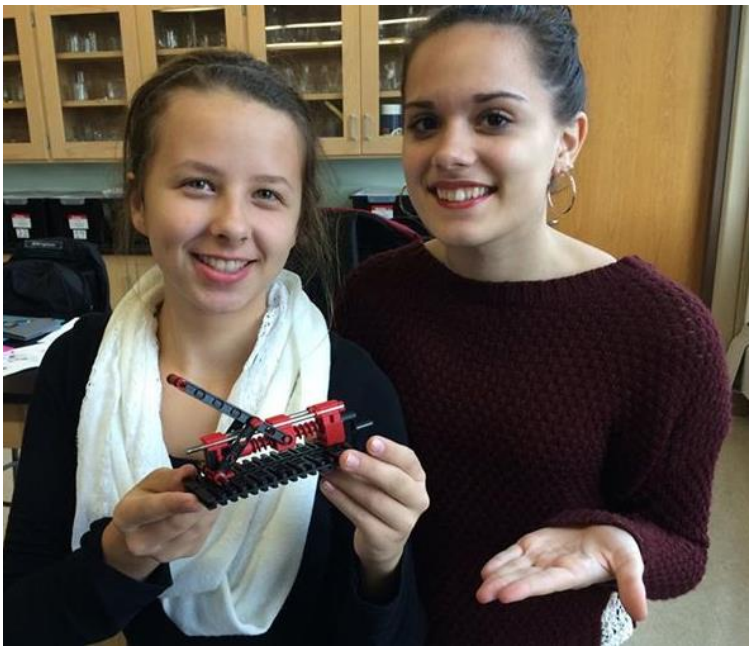

Introduction:

The purpose of this project is to introduce students to the six types of simple machines and how they are used every day. Simple machines are basic devices used to make work easier. A force is said to do work when there is a displacement of the point of application in the direction of the force. Simple machines make this process easier, although the same work will be done. In this activity the students will research the different types of simple machines and then build a model of one or several machines. They will demonstrate their application of the simple machine to the instructor and to the class.

The research and learning activities are designed to help students:

- Utilize mathematical analysis, scientific inquiry and engineering design to develop solutions to open ended problems.
- Access, generate, process, and transfer information using appropriate technologies
- Apply the design process in the design of a mechanical system.
- Read and analyze detailed descriptions of machinery and provide a concise summary for documentation purposes.
- Assign mathematical relationships to analyze mechanical advantage.

- Apply problem solving methodology in the creation of unique solutions to mechanical motion problems.

These authentic learning experiences will provide the students with awareness and skills valuable for a multitude of careers in the programming, robotics, automation, manufacturing and related industries.

Concepts:

Simple machines have been around since ancient times and have helped humans in many ways.

Simple machines can work alone or as a combination known as a compound machine to make work easier

All simple machines have a mechanical advantage.

Work is done when a force causes motion in the direction of the force.

The mechanical advantage can be mathematically calculated and used in the design of products.

A machine can reduce the force required to perform a task but cannot reduce the work required.

If the force required is reduced the distance through which the force acts must be increased if the work is to be the same.

Outline:

Simple Machines
- Wedge
- Inclined plane
- Lever
  - First class
  - Second class
  - Third class
- Screw
- Pulley
- Wheel and Axle

Mechanical Advantage
Work
Force
Energy
Efficiency

Assessment:

Assessment comes in both formative and summative. It is an integral part of quality instruction. During the course of the projects one of the teacher's main functions is to work with student groups, keeping track of progress and providing formative assessment in the form of feedback and promoting reflection on the part of students. The focus should be on lifetime and 21st century skills. The goal of instruction is to promote abilities in research, problem solving, design, experimentation, testing and collecting data.

Rubrics are used in the assessment process to communicate expectations of quality of a task. Rubrics should be shared with students at the beginning of a project so they can clarify any misconceptions before beginning work. They can then build the skills and gather knowledge to solve the problem presented to the expectations of excellence described.

General Rubrics for Literacy tasks:
Argumentative_Pursuasive
Informational_Explanatory

Individual Project Rubric:
Simple machines Rubric

Essential Question
How do simple machines make our lives easier?

Student Scenario:
You have recently joined a team of exhibit designers for an event management company. Your company builds displays for trade shows, conferences, television and museums. Your team has been assigned the responsibility of creating an exhibit of simple machines for a children's museum. The museum curator has asked for an interactive display that clearly demonstrates the advantage of the simple machine. They need a display of the mathematical formula showing how the mechanical advantage is found. You should have a picture collage showing a number of uses for the specific simple machine.

After researching online resources on simple machines and mechanical advantage and participating in enabling activities you will design, build and test your model to be sure it functions. You will create the display that will go with the model you will present your simple machine to the class for approval for use in the children's museum.

Daily Plan:
Day 1-2
Key question: What is mechanical advantage and what has it ever done for me?

Introduce students to the main problem by providing them with the Essential question and the project description
Cover with your students the design process, engineering notebook and design documentation requirements. Discuss the problem statement design brief, testing protocol and management plan. Review the elements of a good engineering report.

The Teacher provides the Student Scenario to the students. Have the students form teams of two. Allow the students five minutes to discuss the problem. Students begin brainstorming ideas in their engineering notebooks.

The teacher will provide a list of vocabulary terms that students will need to research. Student teams can break the lists up and determine how to define the terms.
Students will begin research simple machine concepts and mechanical advantage. Students should begin at http://dev.cosi.org/downloads/activities/simplemachines/sm1.html. Students should sketch each simple machine and make notes about mechanical advantage in the students engineering notebook.

Day 3
Key question: How come it took so long to invent the wheel?

The teacher reviews simple machines with the students checking for understanding of mechanical advantage offered by each simple machine and how it might be calculated. Have students construct the Crank Gear 2 from page 12 of the Mechanic-Static manual. Have students sketch the model in their engineering notebook. Have them determine the gear ratio of the model and explain what effect the gear ratio has on the speed of the output gear.

Days 4-7
Key question: What is a gear train

The teacher reviews the concept of a gear train with the students and how the Crank gear 2 the students constructed the previous day changed the speed. Students should know that the purpose of a gear train is to change speed or direction of the power. Students should build the Gearbox from Page 25 of the Mechanic-Static manual.

Students should document their construction of the gear box and how it can change the output speed depending on their settings. Students should record their observations in their engineering notebook.

When students are finished have them construct the Planetary Gear from page 30 of the Mechanic-Static manual recording observations in their engineering notebook.

Day 8-11
Key question: How can I tell in advance what the mechanical advantage of a design will be?

Student groups will be assigned a simple machine to be included in a model to be built. Students will work in teams and construct a working model of a simple machine. The design and building process should be captured in the engineering notebook.

The teacher checks on the progress the students are making to be sure there are no major issues. Students will watch a video on mechanical advantage. Some suggestions for videos can be found in the resources section below, making notes in their engineering journal. This should help them measure and calculate mechanical advantage of their simple machine model.

Students will finish construction. Students will make entries in their engineering notebook about their observations and challenges during the construction of the project. Students can photograph their project to include in their engineering notebook. Students begin preparation for their display.

Day 12-13
Key question: How can I communicate about my design?

Students finish the creation of their display and print out necessary materials. Students will present their prototyped simple machine design project display to the teacher and the class. There should be time allowed for each team of students to handle and observe every simple machine model.

Vocabulary:

1st class lever
2nd class lever
3rd class lever
Distance
Energy
Force
Fulcrum
Inclined plane
Lever
Mechanical advantage
Pulley
Screw
Simple machine
Wedge
Wheel and axle
Work

Resources:

Websites:

Simple machines Java applet:
http://dev.cosi.org/downloads/activities/simplemachines/sm1.html
Simple machines:
http://www.msichicago.org/play/simplemachines/
http://www.cosi.org/downloads/activities/simplemachines/sm1.html
http://legacy.mos.org/sln/Leonardo/InventorsToolbox.html

Mechanical advantage:
http://www.edinformatics.com/math_science/simple_machines/mechanical_advantage.htm
http://cposcience.com/home/Portals/2/Media/post_sale_content/PHY2/Ancillaries/SkillSheets/Unit_4/10.1_MechAdvSimpMach.pdf
http://www.school-for-champions.com/machines/mechanical_advantage.htm#.Vj0FZLerTBQ

VIDEO:

Mechanical advantage:
https://www.youtube.com/watch?v=yhzMYHiuEC4
https://www.khanacademy.org/science/physics/work-and-energy/mechanical-advantage/v/introduction-to-mechanical-advantage
http://www.schooltube.com/video/e8419c70e9bdf67d3d85/
http://www.sciencekids.co.nz/videos/physics/pulleys.html

Back to daily plan
Back

fischertechnik

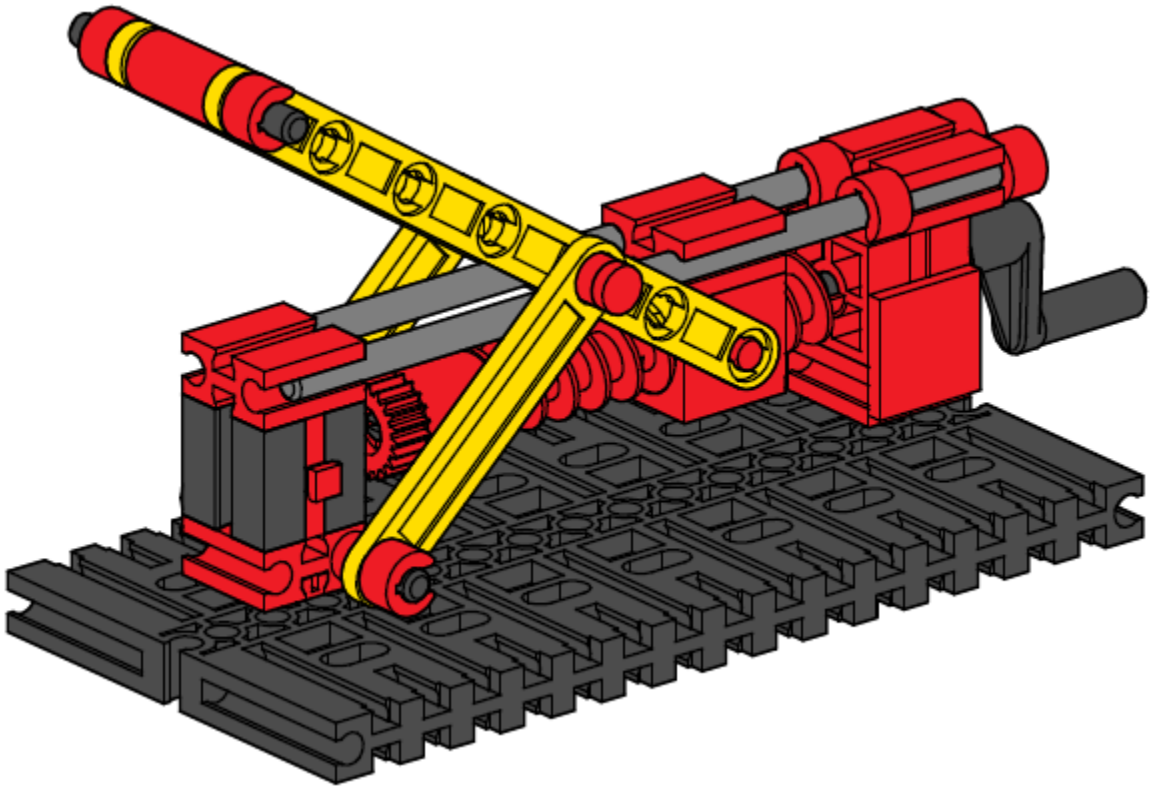

Mechanical Systems

Introduction:

Mechanisms were first recognized during the renaissance and made from simple machines. A mechanism is an arrangement of parts in a mechanical device or machine that is capable of defined movement. It is usually accepted that mechanisms produce a change in motion from the input to the output. Mechanisms change the movements speed, direction or type of motion. The elements in a mechanism are referred to as links. Linkages can be represented by schematic sketches. In this unit students will be introduces to some forms of mechanisms and how they behave and how to represent the linkages as schematics.. During the course of this project, students will design and implement a mechanism to solve a problem. They must apply concepts related to mechanisms and practice proper documentation techniques. They will become familiar with several types of mechanisms and how they are controlled.

The research and learning activities are designed to help students:

- Utilize mathematical analysis, scientific inquiry and engineering design to develop solutions to open ended problems.

- Access, generate, process, and transfer information using appropriate technologies
- Apply the design process in the design of a mechanical system.
- Read and analyze detailed descriptions of machinery and provide a concise summary for documentation purposes.
- Assign mathematical relationships to schematics to apply forces.
- Apply problem solving methodology in the creation of unique solutions to mechanical motion problems.

These authentic learning experiences will provide the students with awareness and skills valuable for a multitude of careers in the programming, robotics, automation, manufacturing and related industries.

Concepts:

- Mechanisms utilize a combination of simple machines to change the speed, direction or type of motion.
- A mechanism can be modeled as an assembly of links and the motion and forces can be mathematically predicted.
- Linkages are a series of links connected by joints represented in schematic drawings which show fixed and movable pins (joints) and links.
- Understand practical uses of mechanisms

Outline:

Mechanisms
- Gears and Gear Ratios
- Crank and slider
- Cams

Motions
- Rotary
- Inline
- Reciprocating

Forces
- Tension
- Compression
- Torque
- Efficiency

Assessment:

Assessment comes in both formative and summative. It is an integral part of quality instruction. During the course of the projects one of the teacher's main functions is to work with student groups, keeping track of progress and providing formative assessment in the form of feedback and promoting reflection on the part of students. The focus should be on lifetime and 21st century skills. The goal of instruction is to promote abilities in research, problem solving, design, experimentation, testing and collecting data.

Rubrics are used in the assessment process to communicate expectations of quality of a task. Rubrics should be shared with students at the beginning of a project so they can clarify any misconceptions before beginning work. They can then build the skills and gather knowledge to solve the problem presented to the expectations of excellence described.

General Rubrics for Literacy tasks:
Argumentative_Pursuasive
Informational_Explanatory

Individual Project Rubric:
Mechanical Systems Rubric

Essential Question
How can I design a mechanism to do what I want it to?

Student Scenario:
You are a bicycle designer that has been given the task of designing a concept braking mechanism to be used on a new line of bicycles. This design will be a braking system for racing bikes. The brakes will be controlled by a hand operated spring loaded lever and will stop a free spinning wheel. The brakes normally would be operated by a steel wire cable but we could substitute a solid linkage or even a gear system in place of the cable. After researching online resources on mechanisms and schematics and participating in enabling activities you will design, build and test your model to be sure it functions. You will create a schematic of your system to present for approval before the building commences. The large 60 pulley with a hub nut and axle through it can simulate a free spinning bicycle wheel. The brake mechanism must fit around the wheel and apply pressure to it from opposite sides.
Once the prototype is constructed and working, the students should record a brief movie. Their final presentation should document the design process and then describe the features of your brake control system that makes it unique.

Daily Plan:
Day 1
Key Question: What are the expectations for this project?

Introduce students to the main problem by providing them with the Essential question and the project description
Cover with your students the design process, engineering notebook and design documentation requirements. Discuss the problem statement design brief, testing protocol and management plan. Review the elements of a good engineering report.

Have the students form teams of two. Allow the students five minutes to discuss the problem. Students begin brainstorming ideas in their engineering notebooks.

The teacher will provide a list of vocabulary terms that students will need to research. Student teams can break the lists up and determine how to define the terms.

Students should begin by researching simple mechanisms. Good sites for mechanisms are found below.

Day 2
Key Question: How do we begin designing a mechanism?

The teacher reviews the simple mechanisms and how they work with the students. The teacher should provide the students with the document on Linkage Diagrams to aid them in organizing their thoughts. Students work through the activity and create sketches in their engineering notebooks.

Day 3-7
Key question: If I see an idea for a mechanism someplace how can I record it for later use?

After completing the document on creating schematics, the students will build the Car Jack design on page 45 of the Mechanic-Static manual.
The students should record their jack in motion and save the video for use in their presentation video. The students should create a linkage diagram from the model. Students record their observations in their engineering notebook.
When students have finished the car jack they should select another mechanism from the Mechanic Static manual. Guide them to pages 34-76 and have them select a mechanism to construct. Each group should select a different model They should record a video of what they created and how it works. They should create a linkage diagram of the model.

Day 8-9
Key Question: How can I construct a mechanism to do what I want it to?

Students will research bicycle braking systems and begin the design of their breaking system. Students will brainstorm ideas and complete a mechanism diagram before beginning the build. Student should use digital photographs and sketches to record the progress in their engineering notebooks.

Day 10-11
Key Question: What information does my presentation need?

Students will finish their mechanisms. They should record a brief movie to be presented to the teacher and the class. They should point out their best concepts and mechanisms used and record a short presentation about the design process. Students should save their video to a shared folder and watch other groups videos.

Vocabulary:

- Bell Crank
- Cam
- Compression
- Crank and slider
- Efficiency
- Follower
- Force
- Gear
- Lever
- Linear motion
- Linkage
- Linkage diagram
- Links
- Reciprocating motion
- Rotary motion
- Tension
- Torque
- Work

Resources:

- Web Pages
  - Mechanisms:
    - http://www.technologystudent.com/cams/camdex.htm
    - http://www.technologystudent.com/cams/link1.htm
    - http://www.technologystudent.com/gears1/geardex1.htm
    - http://www.technologystudent.com/cams/crkslid1.htm
    - http://www.brockeng.com/mechanism/index.htm
    - http://www.physicsgames.net/game/Mechanism.html
  - Animated mechanisms:
    - http://www.mekanizmalar.com/

  - Gear ratio:
    https://www.youtube.com/watch?v=D_i3PJIYtuY

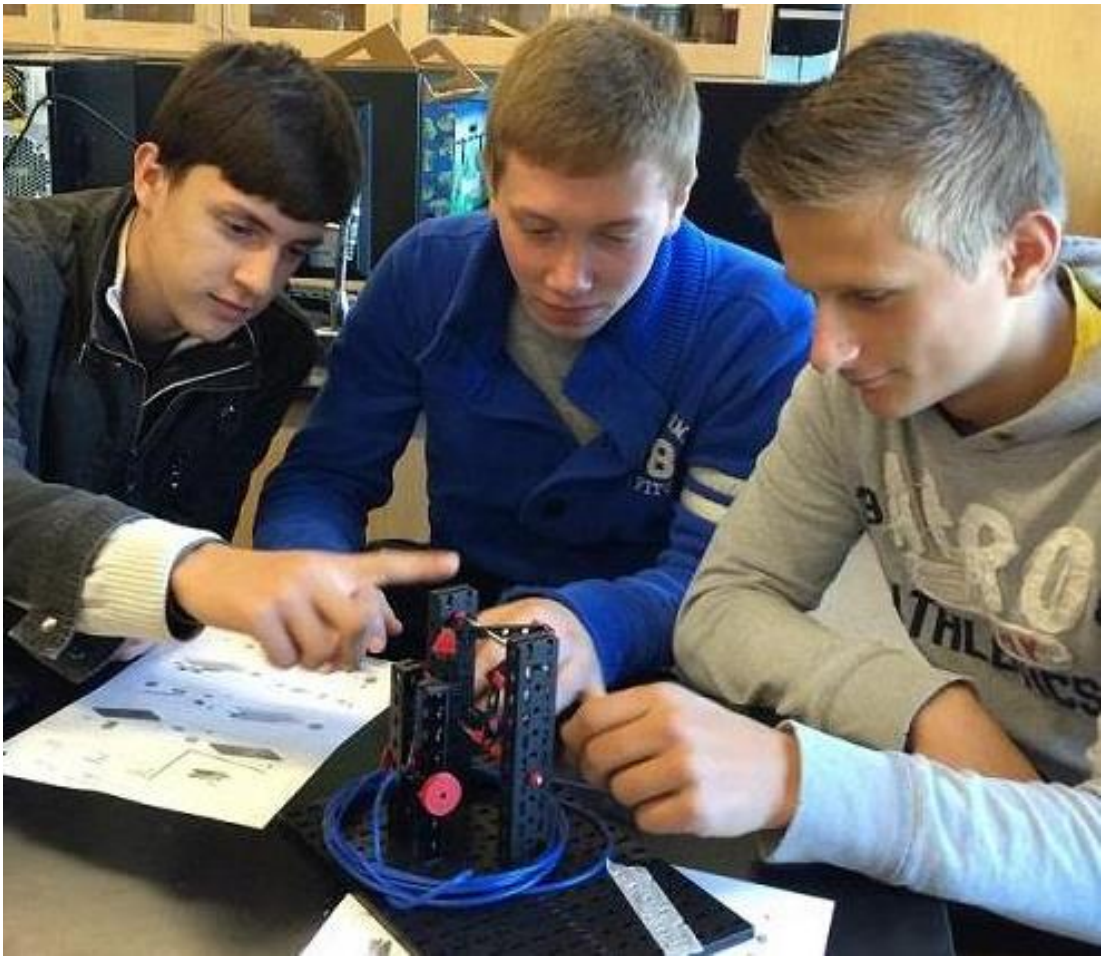

Back to Lesson
Back

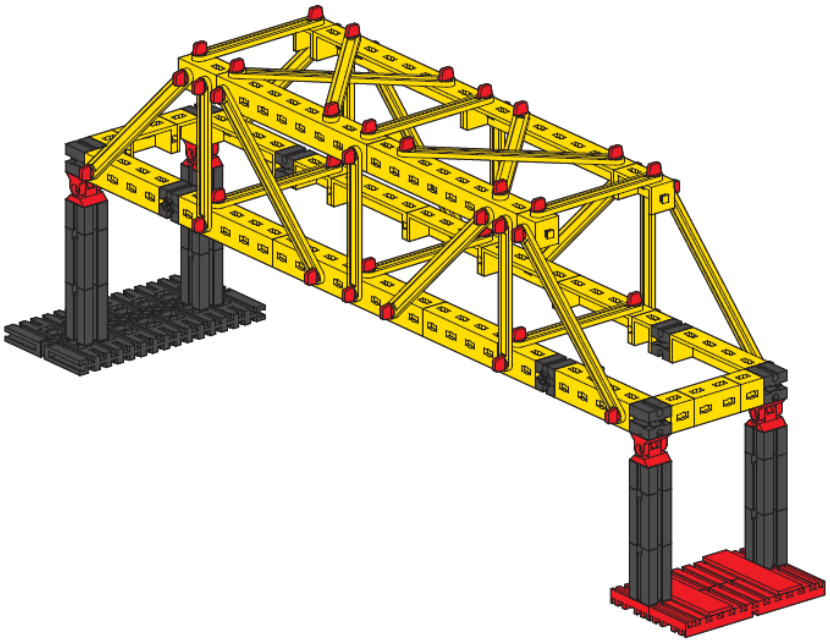

Structures:

Introduction:

The purpose of this project is to introduce students to how structures are created to withstand the forces placed upon them and the process of designing, constructing and testing a mechanical system involving moving components. During the course of this project, students will design, analyze and implement a solution to a roller coaster design problem. Students will apply concepts related to the physics of motion, energy, friction, and multimedia presentation techniques.

The research and learning activities are designed to help students:

- Identify the effects of the following variables on the velocity of ball rolling on the coaster track: initial track height, track angle (shape), track loop height, track loop shape, friction.
- Identify the effects of velocity on the balls ability to stay on the track.
- Utilize mathematical analysis, scientific inquiry and engineering design to develop solutions to open ended problems.
- Apply the problem solving methodology in the creation of a unique roller coaster design.
- Analyze the characteristics of their coaster design using a computer simulation tool.

- Construct a working prototype of their coaster design.

Concepts:

- Conservation of Energy- energy cannot be created or destroyed; energy can only be converted from one form to another.
- Mechanical energy includes: Kinetic energy (KE)- the energy of motion and Potential energy (PE)- the energy of position.
- Friction forces between a moving object and the surroundings convert the mechanical energy into thermal energy.
- Centripetal forces are present whenever objects move in a circular path.
- The velocity and acceleration of an object changes as it travels along the track of a roller coaster.
- The forces exerted on an object in motion are often described as g-forces.
- Reaction forces are transferred to the track of the coaster as the object moves along the path defined by the track.
- Safety of the passengers and spectators is an important consideration in the design of roller coasters.

Outline:

Energy
    Potential
    Kinetic
    Mechanical
Forces
    Friction
    Reaction
    Centripetal
Conservation of Energy
Velocity
Acceleration
Vectors
G-Forces

Assessment:

Assessment comes in both formative and summative. It is an integral part of quality instruction. During the course of the projects one of the teacher's main functions is to work with student groups, keeping track of progress and providing formative assessment in the form of feedback and promoting reflection on the part of students. The focus should be on lifetime and 21st century skills. The goal of instruction is to promote abilities in research, problem solving, design, experimentation, testing and collecting data.

Rubrics are used in the assessment process to communicate expectations of quality of a task. Rubrics should be shared with students at the beginning of a project so they can clarify any misconceptions before beginning work. They can then build the skills and

gather knowledge to solve the problem presented to the expectations of excellence described.

General Rubrics for Literacy tasks:
Argumentative_Pursuasive
Informational_Explanatory

Individual Project Rubric:
Structures Rubric

Essential Question:
How can we predict if something we design will work when we are finished?

Student Scenario:
You are a designer working for the Drop Dynamics Coaster Company. Your team has been given the assignment of designing the “Desperate Plunge”, a combination coaster and water ride for the latest Las Vegas theme park. There is stiff competition to obtain the contract and the work is important to your firm. The design calls for a loop the loop section of the coaster before taking the final plunge into the water at the end of your ride. Your team will design and build a prototype as part of your final design presentations to your clients.

After researching informational texts and online resources on the coaster design and participating in the enabling learning activities intended to assist you in the designing, building and testing on your coaster prototype, write a design brief, develop a design proposal and create a multimedia presentation that identifies the problem (design a coaster) and argues for your solution. Support your position with evidence from your research and from conclusions you draw from the enabling activities.

Daily Plan:
Day 1
Key Question: What are the expectations for this project?

The Teacher provides the Student Scenario to the students. Have the students form teams of two. Allow the students five minutes to discuss the problem. Students begin listing information they already know in their engineering notebooks along with information they think they might need. The teacher will facilitate a discussion of what the students have written.

Cover with your students the design process, engineering notebook and design documentation requirements. Discuss the problem statement design brief, testing protocol and management plan. Review the elements of a good engineering report.

Teacher will provide a list of vocabulary terms that students will need to research. Student teams can break the lists up and determine how to define the terms. The

teacher can assign a few words for the students to research each day so they have an understanding of the discussions as they occur. The teacher should also help the students outline the research they will need to do to be ready to work independently on the project at the end of the unit.

Day 2-3

Key Question: How can I be sure my structure will stand up.

The teacher discusses with the class about their observations of structures, what they observe in their own houses, school buildings, bridges and other structures they are familiar with. Discuss stable and unstable structures. The goal is to have students recognize that a rectangle is unstable structurally while a triangle or arch is stable.

Students should begin by building the Girder Bridge from page 92 of the Mechanic and Static manual. Once the bridge is completed, have the students place a hand gently on the top of the girder bridge, and rock the bridge back and forth. Have them record their observations in their engineering notebook.

Day 4-5

Key Question: Why do we use triangles in trusses?

Have the student groups improve the basic girder bridge by using either the Bridge with Underbeam from page 95 of the Mechanic and Static manual or the Bridge with Overbeam from page 97 of the Mechanic and Static manual. Let student groups compare the underbeam and the overbeam. Is one more stable than the other? What about the structures makes them capable of holding more weight? What improvements would allow them to be more stable? Have the students record their observations in the engineering notebook.

Day 6-10

Key Question: How can I assure that all the things I design stay in the correct place?

Discuss with students how structures are used to hold components in the correct position. The structure combined with mechanisms are used to align components and cause actions in the desired place.

Have students construct the Chain Conveyor and Spring Launcher on page 89 of the Physics 2 manual. Students should record progress and observations in their engineering notebook.

Day 11-12

Key Question: How can I be sure the Rollercoaster will stay on the track?

The teacher begins the discussion about rollercoasters and asks the students to think about the forces working on the car. If students have not had physics they will need extra time to understand the forces involved. The teacher will provide the Energy Research document to students. Students divide into teams to research and record their findings on the sheet to be included in their engineering notebooks.

The students will form small groups of four to six students to discuss the results of their findings. If they have trouble the teacher can assist. Mechanical Energy and Conservation of Energy- Answer Key will allow the teacher a reference.

Once the students have answered the questions from the energy research document they will then have the background to understand the websites about rollercoasters. Students should begin with the site Roller Coaster Gallery. They should also view the video about Conservation of Energy.

Day 13-14
Key Question: Is there a way to test a design?

The teacher will begin the class by asking the groups to comment about their research. Discussion should center on what they already have learned and what they need to learn.

Students will work in teams of two and construct Model for Experiment 2 on page 8 in the Physics I manual.

Students will create a computer model of Model 2 using the *Roller Coaster Physics* program. This program should be downloaded from the Website. You might have to download the Java applet and have the students run it locally. The direct link to download the applet is http://www.compadre.org/portal/document/ServeFile.cfm?ID=8228&DocID=873&DocFID=8039&Attachment=1. Students will run the java applet and follow the instructions for operating the software. Students will get a screen capture of the program and make note of the differences between track 1 and track 2 (PE, KE, max velocity, max reaction force location and size)

Day15-16
Key Question: How much will friction affect our models?

The class begins with a discussion of modeling. Parallels should be drawn between the fischertechnik model and the computer model created by the software. The conversation should allow students to discover that modeling is very important to anyone designing any kind of a product.

Two student groups will work together. One group of two students will construct Model 3: looping on page 18 of the Physics 1 manual. The other group of students will construct Model 4:Half Pipe on page 22 of the Physics I Manual.

Students will create a computer model of Models 3 and 4 using the *Roller Coaster Physics* program. Students will get a screen capture of the program and make note of the PE, KE, max velocity, max reaction force location and size.

Day 17-20
Key Question: How much do my corners need to be banked?

The class begins with a discussion of the two models just completed. These are basically two dimensional models with no turns. Most rollercoasters have turns. Students should wonder how much the track should be banked to allow the cars to easily stay on the track.

Students should spend some time with further readings from the list of resources with special attention to centripetal force.
Students will construct the Stage Conveyor from page 47 of the Physics II manual.
Students will make entries in their engineering notebook about their observations and challenges during the construction of the project. Students will photograph their project to include in their engineering notebook.

Day 21-26
Key Question: What should I prepare for our sales pitch?

This section begins with the teacher reviewing the requirements of the project.
Students should ask needed questions before beginning.
Students will write a design brief for the coaster design project.
Students will work as a team to brainstorm and sketch ideas in their engineering notebook.
Students will begin construction and computer modeling of their coaster design. The *Roller Coaster Physics* program is limited to a 2-D simulation while the actual coaster is a 3-D assembly. The computer model will be a simplified version of the real model. Students should discuss the simplifying assumptions that are required to use the 2-D computer model with the instructor prior to starting the computer model.
Students will complete construction and computer modeling of their coaster design.
Students will get a screen capture of *Roller Coaster Physics* program. Students will calculate the PE and KE at the start and end points of the coaster.
Students will identify the point along the track where the largest reaction force (R) occurs and how this affects the design of the coaster.
Students will develop an outline for the design proposal.
Students will prepare a multimedia sales presentation.

Day 27
Key Question: Is it the best idea or the best presentation that will win the bid?

The class should begin by asking the students the key question.
Students will present their design proposal to the class in groups and take under 5 minutes per group.
Students are asked to rank the proposals they would recommend to a committee of people.
Students do not include their own group in the rankings.
Once the results are tabulated a discussion on the key question should be held a second time.

Vocabulary:

Acceleration
Centripetal forces
Circular path
Compression
Conservation of Energy
Friction forces
G-Forces
Kinetic energy (KE)
Mechanical energy
Potential energy (PE)
Reaction forces
Tension
Thermal energy
Velocity

Resources:

Websites:

- Roller Coaster gallery
  http://www.flickr.com/photos/physicsclassroom/galleries/72157625262614925/
- Conceptual Physics- Conservation of Energy
  http://www.youtube.com/watch?v=BVxEEn3w688
- Centripetal Force
  http://www.flickr.com/photos/physicsclassroom/galleries/72157625230331260/
- How Roller Coasters Work
  http://science.howstuffworks.com/engineering/structural/roller-coaster8.htm
- Amusement Park Physics
  http://www.learner.org/interactives/parkphysics/coaster.html
- The Physics Classroom
  http://www.physicsclassroom.com/Class/circles/u6l2b.cfm
- Roller coaster g forces
  http://www.physicsclassroom.com/mmedia/circmot/rcd.cfm
- Roller coaster physics modeler

http://www.compadre.org/Repository/document/ServeFile.cfm?ID=8228&DocID=873

- The G-Force Controversy
  http://www.iaapa.org/industry/funworld/2003/Mar03/Features/G%20Forces/G%20Forces.html
- Occupational Handbook
  http://www.bls.gov/oes/2008/may/naics5_541330.htm#b17-0000

Back to Lesson
Back

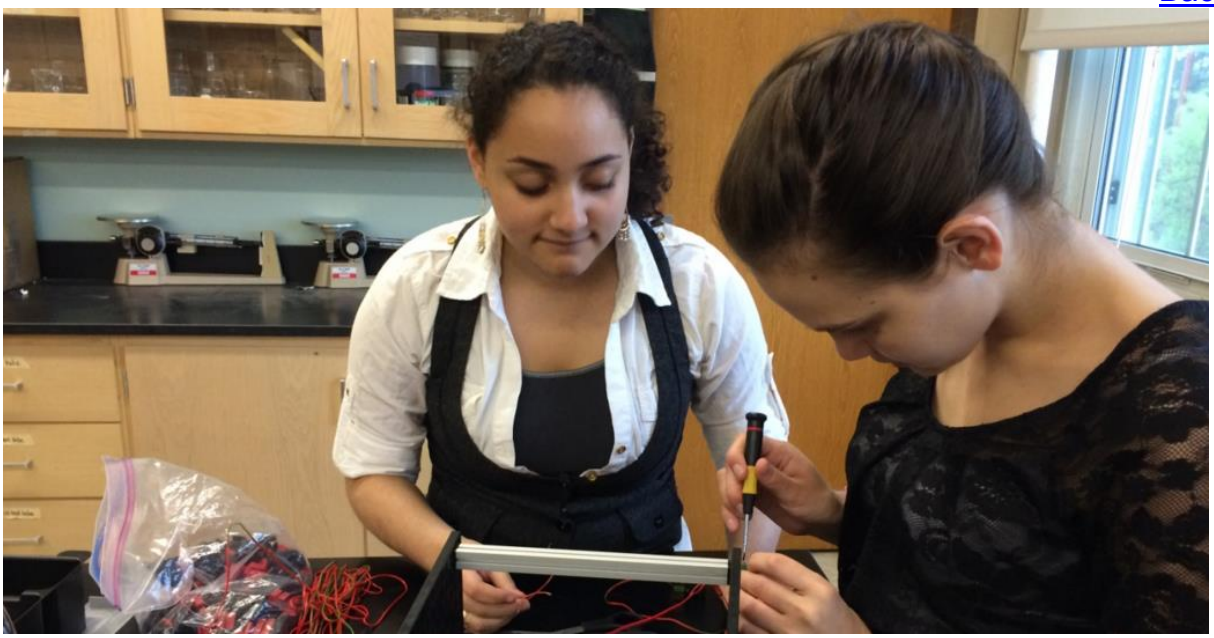

Conversion and Storage of Energy

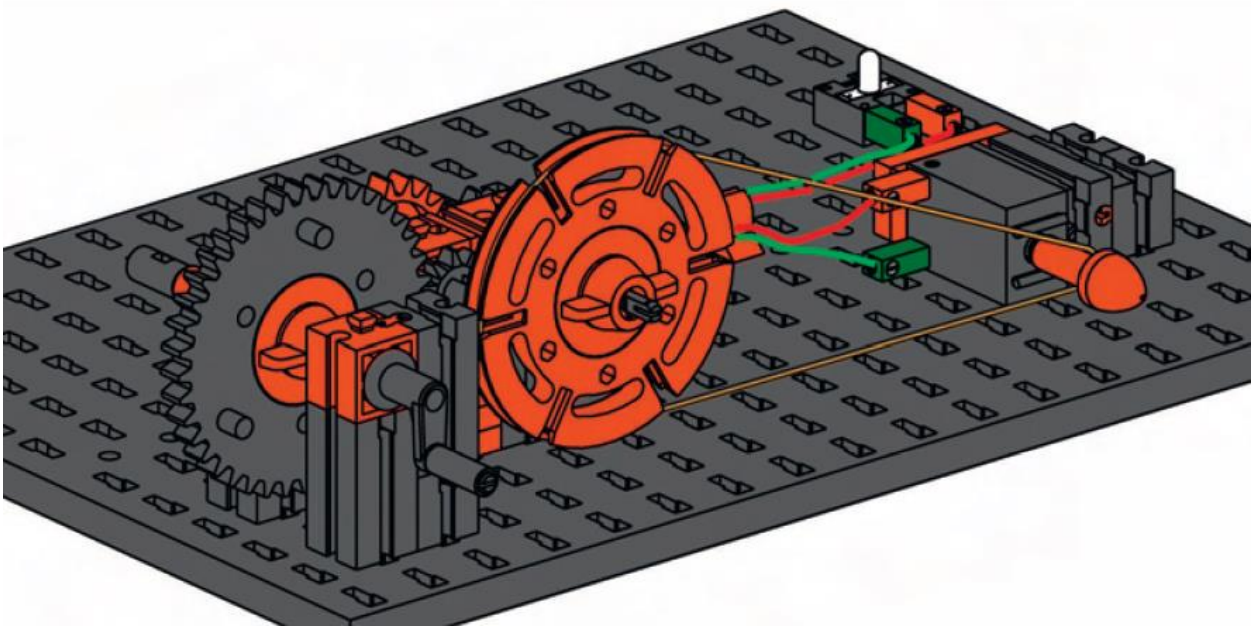

Introduction:

How is a single piece of coal converted to the electricity for your home? How many transformations does it go through? How is energy stored and then dispersed? In this unit we will learn about how energy is changed and moved around. During the course of this project, students will design and implement several energy producing systems. They must apply concepts related storage and conversion of energy, and documentation techniques. They will become familiar with different types of energy sources and how it's converted from one form into another.

The research and learning activities are designed to help students:

- Utilize mathematical analysis, scientific inquiry and engineering design to develop solutions to open ended problems.
- Access, generate, process, and transfer information using appropriate technologies.
- Design mechanisms for converting energy from one form to another.
- Read and analyze detailed descriptions of energy and power conversions.
- Connect the relationship between the outputs and the inputs to energy systems.
- Apply problem solving methodology in the creation of unique solutions to energy problems.
- Understand there are tradeoffs with any form of energy and its costs to the environment.

These authentic learning experiences will provide the students with awareness and skills valuable for a multitude of careers in the programming, robotics, automation, manufacturing and related industries.

Concepts:

- Energy is the ability to do work
- Energy has the ability to change from one form to another
- There are many different machines that convert energy forms
- Energy can be stored to use at a later time
- Stored energy is potential while moving energy is kinetic
- Energy can convert from one form to another, but the total amount of energy in the system stays the same.
- There are losses caused by inefficiency in any transfer process, usually in the form of heat
- There are environmental and social costs associated with any energy usage

Outline:

Energy
    Potential
    Kinetic
    Power
Generation
Pneumatic
Environmental Concerns
Sources
    Renewable
    Nonrenewable

Assessment:

Assessment comes in both formative and summative. It is an integral part of quality instruction. During the course of the projects one of the teacher's main functions is to work with student groups, keeping track of progress and providing formative assessment in the form of feedback and promoting reflection on the part of students. The focus should be on lifetime and 21st century skills. The goal of instruction is to promote abilities in research, problem solving, design, experimentation, testing and collecting data.

Rubrics are used in the assessment process to communicate expectations of quality of a task. Rubrics should be shared with students at the beginning of a project so they can clarify any misconceptions before beginning work. They can then build the skills and gather knowledge to solve the problem presented to the expectations of excellence described.

General Rubrics for Literacy tasks:
Argumentative_Pursuasive
Informational_Explanatory

Individual Project Rubric:
Conversion and storage of energy Rubric

Essential Question:
How can energy be converted to a form I can use?

Student Scenario:
Purchasing electricity has become very expensive and in some cases can pollute the local environment. Businesses and homeowners are looking for ways to save money and electricity to help the planet. You have been given the task of lowering the electrical bill of your school along with looking at sources that might have less of an impact on the planet. There are several ways we know of that could create electricity in order to help provide power to your school building. You will explore several methods of creating energy, storing it and then converting it to provide electricity.

After participating in research and building an example of their power source each student group will select one energy source for their presentation. They will demonstrate how their selected system works and explain the benefits and drawbacks of their system. They will include a section on how the energy can be stored for future use. They will also include a section on how their chosen form will help protect the environment and outline the costs to the environment and community from their choice.

Daily Plan:
Day 1
Key Question: What are the expectations for this project?

Introduce students to the main problem by providing them with the Essential question and the project description
Cover with your students the design process, engineering notebook and design documentation requirements. Discuss the problem statement design brief, testing protocol and management plan. Review the elements of a good engineering report.

Teacher will provide a list of vocabulary terms that students will need to research. Student teams can break the lists up and determine how to define the terms. The teacher can assign a few words for the students to research each day so they have an understanding of the discussions as they occur. The teacher should also help the students outline the research they will need to do to be ready to work independently on the project at the end of the unit. The teacher will divide students into groups and assign a different topic to each group if necessary. The students will deeply research their chosen topic and present their findings as part of their final report.

Students should begin by researching Potential and Kinetic energy. Links can be found in the resources section.

Day 2
Key Question: How can I convert potential to kinetic energy?

The teacher will check for understanding of potential and kinetic energy definitions and relationship between them. Students will construct the Bending rod drive vehicle page 13 of the Drive Systems Manual

Day 3
Key Question: What types of energy sources can we use?

The teacher will introduce the students to the site http://www.electrocity.co.nz/Game/game.aspx and show students that they can discover different ways to power their towns. Students will create their own towns, make decisions on development and supply them with energy sources.

Day 4-5
Key Question: What are the different types of energy and how is it converted to another form?

The teacher reviews comments about the ElectroCity game checking for student reactions. The concept of generation is introduced. Students research the background of generators from a site on generators. An example can be found in the resources section.

The students assemble and test the Generator. Students should sketch the completed generator in their engineering notebooks and explain how if functions. They should define the gear ratio in use. Remind students that the LED bulb only functions when wired correctly. If the LED does not light reverse the connection.

Days 6-10
How can I convert simple energy sources around me to energy I can use?

The teacher checks for understanding about the generator project. Once students are familiar with the concept of generation the teacher can assign groups one of the following topics to research and model to build. Sites that can help in the research are found in the resources section. Students will prepare a short presentation about the energy source they are exploring by creating a short PowerPoint presentation. Storage of the energy for future use needs to be a part of the presentation. Students should sketch the completed mechanism in their engineering notebooks and explain how if functions. They should define the gear ratio in use.

Hydropower: Students will construct the Water turbine pg9 Green Energy tech manual
Wind Power: Students will construct the Windmill pg18 Green Energy tech manual.
Photovoltaic: Students will construct the Bicycle rider pg 34 Green Energy techmanual.
Pneumatic: Students will construct the Double Sliding Doors page 15 of the Pneumatics manual.

Day 11
Key Question: What information does my presentation need?

Students will present their PowerPoint multimedia presentation to the teacher and the class.

Vocabulary:

Battery
Conservation of energy
Efficiency
Electrical energy
Energy transfer
Horsepower
Kinetic energy
Nonrenewable source of energy
Pneumatics
Potential energy
Renewable source of energy

Resources:

Webpages

The energy story:

http://energyquest.ca.gov/story/index.html
http://www.boemre.gov/omm/pacific/kids/Watts/Appendix/1.%20Intro.pdf
http://www.renewablegreenenergypower.com/

Energy transformation:

http://www.wisegeek.com/what-is-energy-transformation.htm

Generators

http://energyquest.ca.gov/story/chapter06.html

Hydropower:

http://www.eia.gov/kids/energy.cfm?page=hydropower_home-basics-k.cfm
http://www.microhydropower.net/basics/intro.php

http://www.energybeta.com/hydropower/hydropower-explore-the-power-of-water/

Mechanical energy
http://www.physicsclassroom.com/Class/energy/u5l1d.cfm

Photovoltaic systems
http://www.greenbuildingadvisor.com/blogs/dept/musings/introduction-photovoltaic-systems
http://www.nrel.gov/learning/re_photovoltaics.html

Potential and kenetic energy
https://www.youtube.com/watch?v=L2mdAvdPhT4
https://www.youtube.com/watch?v=xXXF2C-vrQE
http://zonalandeducation.com/mstm/physics/mechanics/energy/introduction/introduction.html

Storage of Energy
http://energyquest.ca.gov/story/chapter05.html
http://greenopinion.wordpress.com/2009/04/20/types-of-energy-storage/
http://www.visionofearth.org/industry/energy-storage/

Wind Power
http://www.renewablegreenenergypower.com/wind-energy-facts-and-information-an-introduction-to-wind-energy/
http://www.energybeta.com/windpower/introduction-to-wind-power/

Back to Lesson
Back

fischertechnik

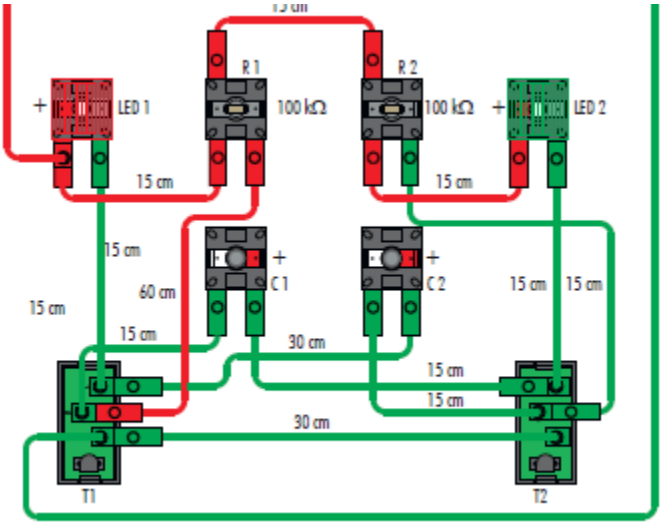

Basic Electricity

Introduction:

Where does electricity come from? Electricity makes everything from your lights in your classroom work all the way down to your cell phone. In this unit we will explore the terms of electricity and the theory behind it. Students will build several models that will allow them to measure and calculate basic electrical terms like volts, amps and watts. This process will introduce several basic electricity concepts that they will be able to apply in upcoming units. They will give a small presentation at the end of this unit to the teacher.

The research and learning activities are designed to help students:

- Identify and apply appropriate methodology when designing electrical circuits.
- Utilize mathematical analysis, scientific inquiry and engineering design to develop solutions to open ended problems.
- Access, generate, process, and transfer information using appropriate technologies.
- Use proper electrical design to process sensor information and control output.
- Read and analyze schematics and provide a concise summary for documentation purposes.
- Express graphically an electrical circuit.
- Apply problem solving methodology in the creation of unique solutions to robotic problems.

These authentic learning experiences will provide the students with awareness and skills valuable for a multitude of careers in the programming, robotics, electronics, machine maintenance automation, manufacturing and related industries.

Concepts:

- Current is the flow of electrons and measured in amperage
- Current, voltage and resistance are all related in basic electricity
- A circuit can be series, parallel or a combination of the two.
- Current only flows when there is a complete electrical path
- Current is the same anyplace in a series circuit
- Voltage is the same across branches of a parallel circuit.
- Electrical circuits can be represented by schematics

Outline:

Circuits
- Open circuit
- Closed Circuit
- Short Circuit
- Series Circuit
- Parallel Circuit
- Schematics

Ohm's Law
- Voltage
- Current
- Resistance

Power

Assessment:

Assessment comes in both formative and summative. It is an integral part of quality instruction. During the course of the projects one of the teacher's main functions is to work with student groups, keeping track of progress and providing formative assessment in the form of feedback and promoting reflection on the part of students. The focus should be on lifetime and 21st century skills. The goal of instruction is to promote abilities in research, problem solving, design, experimentation, testing and collecting data.

Rubrics are used in the assessment process to communicate expectations of quality of a task. Rubrics should be shared with students at the beginning of a project so they can clarify any misconceptions before beginning work. They can then build the skills and gather knowledge to solve the problem presented to the expectations of excellence described.

General Rubrics for Literacy tasks:
Argumentative_Pursuasive
Informational_Explanatory

Individual Project Rubric:
Basic Electricity Rubric

Essential Question

How do I document and communicate the electrical circuit design?

Student Scenario:

You are in head engineer in charge of wiring a new factory that is being built. It is very important to the workers that will be there that they have plenty of bright lights in the ceiling so they can see their work. There will be large manufacturing equipment on the factory floor running all day long. We do not want the lights and the machines interfering with each other. If wired incorrectly, the lights could become too dim or the machines might slow down. This situation could cause accidents to workers or damage to machines. It is your job to make sure the building is wired correctly.
You will conduct internet research to discover electrical theory. Then we will test this theory by building prototype circuits. All work should be documented in the engineering notebook. Students will create a schematic to wire three lights to maximize the lights and to connect one motor so it will not slow down. Students will create a prototype wiring of the schematic. A small presentation on PowerPoint including the schematic and digital photo will be submitted at the conclusion to the teacher.

Daily Plan:

Day 1

Key Question: What are the expectations for this project?

The Teacher provides the Student Scenario to the students. Have the students form teams of two. Allow the students five minutes to discuss the problem. Students begin listing information they already know in their engineering notebooks along with information they think they might need. The teacher will facilitate a discussion of what the students have written.
Introduce students to the main problem by providing them with the Essential question and the project description

Introduce students to the main problem by providing them with the Essential question and the project description
Cover with your students the design process, engineering notebook and design documentation requirements. Discuss the problem statement design brief, testing protocol and management plan. Review the elements of a good engineering report.

Teacher will provide a list of vocabulary terms that students will need to research. Student teams can break the lists up and determine how to define the terms. The teacher can assign a few words for the students to research each day so they have an understanding of the discussions as they occur. The teacher should also help the students outline the research they will need to do to be ready to work independently on the project at the end of the unit.

Day 2
Key Question: How does electricity work?

Students divide into groups. Each group will be responsible for assuring all members of the group understand the basics of electricity. Students will research the basics of electricity using sites listed in the resource area to get started. As a wrap up activity the teacher should call on each team to explain one aspect of the basics of electricity. The team will select a spokesperson to provide the basic explanation of the assigned aspect. Other groups can add comments as needed. Each group explains a different aspect or term.

Day 3-4
Key Question: What is the difference between series circuits and parallel circuits?

The teacher will take some time to review the basics of electricity to be sure they understand. Working in their teams the students should research series circuits, open circuits and short circuits and parallel circuits. Have the students work with https://phet.colorado.edu/en/simulation/circuit-construction-kit-dc-virtual-lab. Once the teams finish they should work through the activity on circuits and schematics.

Day 5
Key question: How can I figure out the relationship between Voltage, Current, and Resistance?

The teacher reviews with the students the concepts of the basics of electricity. The teacher explains the concept of direct and inverse relationships checking for understanding. The teacher should show how X=Y is a direct relationship. When X increases, Y increases. The teacher should also show that X=1/Y is an inverse relationship where X increases as Y decreases and X decreases as Y increases. Students should then break into teams to research Ohms Law. Students should begin with https://phet.colorado.edu/en/simulation/ohms-law. When finished students should work on the Ohms Law and Power activity.

Day 6-7
Key Question: What needs to be in my presentation?

Students will finish up any readings and calculations on the different types of circuits. Students will prepare their schematics and assemble a test circuit to demonstrate their schematic. Students will prepare their findings in a brief PowerPoint and submit to the teacher.

Vocabulary:

Alternating Current
Amperage

Branches
Circuit breaker
Current
Direct Current
Multimeter
Ohms Law
Open circuit
Parallel
Power
Resistance
Series
Short circuit
Voltage
Watts

Resources:

Websites

Basics of Electricity
http://www.reprise.com/host/electricity/atoms.asp
http://www.allaboutcircuits.com/vol_1/index.html
http://www.physics4kids.com/files/elec_intro.html
http://www.eia.gov/kids/energy.cfm?page=electricity_home-basics-k.cfm
http://science.howstuffworks.com/electricity.htm

Schematic symbols
http://www.rapidtables.com/electric/electrical_symbols.htm

Series Circuit:
http://technologystudent.com/elec1/srcirc1.htm

Parallel circuit:
http://technologystudent.com/elec1/prcir1.htm

How to use a multi-meter:
http://technologystudent.com/elec1/metre1.htm

Ohms law
http://www.allaboutcircuits.com/vol_1/chpt_2/1.html

voltage dividers
http://www.youtube.com/watch?v=XxLKfAZrhbM

Back to Lesson
Back

fischertechnik®

Electronics

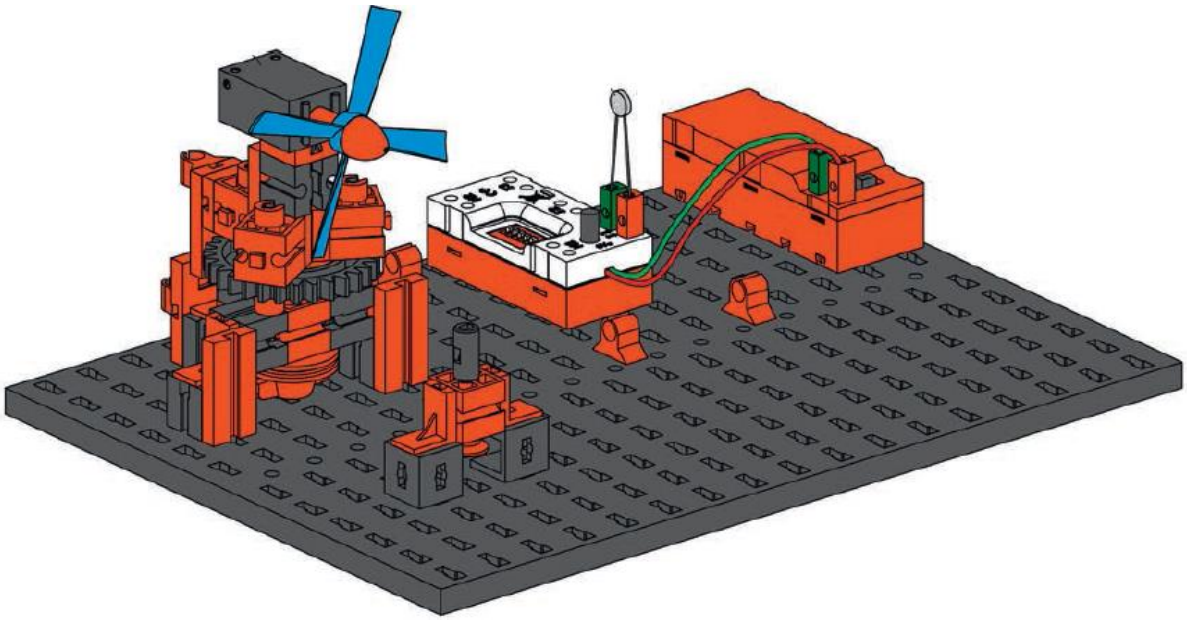

Introduction:

Electronics is the study of how electric energy is controlled and utilized. To begin an understanding of matter is essential to discovering why some elements conduct electricity and some impede the flow of electrons. Active and passive components allow us to define circuitry to perform functions. The main active component is the transistor. Transistors can be used by themselves or in integrated circuits which can have millions of transistors in very small areas. Passive components such as resistors and capacitors regulate or store or maintain energy in the form of electrons.

The research and learning activities are designed to help students:

- Identify and apply appropriate methodology when designing electrical circuits.
- Utilize mathematical analysis, scientific inquiry and engineering design to develop solutions to open ended problems.
- Access, generate, process, and transfer information using appropriate technologies.
- Use proper electrical design to process sensor information and control output.
- Read and analyze schematics and provide a concise summary for documentation purposes.
- Express graphically an electrical circuit.
- Apply problem solving methodology in the creation of unique solutions to robotic problems.

These authentic learning experiences will provide the students with awareness and skills valuable for a multitude of careers in the programming, robotics, automation, manufacturing and related industries.

Concepts:

- Current is the flow of electrons and measured in amperage
- Current, voltage and resistance are all related in basic electricity
- A circuit can be series, parallel or a combination of the two.
- Current only flows when there is a complete electrical path
- Current is the same anyplace in a series circuit
- Voltage is the same across branches of a parallel circuit.
- Electrical circuits can be represented by schematics
- Transistors are semiconductor devices that can be used as switches, amplifiers
- Semiconductor material is manufactured to have an excess of electrons (N-Type) or an excess of holes (P-Type).
- Sandwiching N-Type material with P-Type material allows the designer to define how a component will perform. These components are classified as semiconductors.

Outline:

Circuits
- Open circuit
- Closed Circuit
- Short Circuit
- Series Circuit
- Parallel Circuit
- Schematics

Ohm's Law
- Voltage
- Current
- Resistance

Power

Assessment:

Assessment comes in both formative and summative. It is an integral part of quality instruction. During the course of the projects one of the teacher's main functions is to work with student groups, keeping track of progress and providing formative assessment in the form of feedback and promoting reflection on the part of students. The focus should be on lifetime and 21st century skills. The goal of instruction is to promote abilities in research, problem solving, design, experimentation, testing and collecting data.

Rubrics are used in the assessment process to communicate expectations of quality of a task. Rubrics should be shared with students at the beginning of a project so they can clarify any misconceptions before beginning work. They can then build the skills and

gather knowledge to solve the problem presented to the expectations of excellence described.

General Rubrics for Literacy tasks:
Argumentative_Pursuasive
Informational_Explanatory

Individual Project Rubric:
Electronics Rubric

Essential Question
How can I predict if my circuit will be safe to turn on?

Student Scenario:
You are in head engineer in charge of designing the circuitry for the company's new flasher. It is important that technicians who will be servicing the electronics have a schematic that shows the flow of electricity in the circuit. It is important that the technicians be able to read the schematic and find the value of the appropriate components. It is your job to create the schematic in an organized fashion so that it is easy to read by the technicians.

You will conduct internet research to discover electronic schematic theory. Then design, build, test and create schematics for a number of designs. All work should be documented in the engineering notebook. Students will create a schematic to represent the electronic flasher circuit. Students will create a prototype wiring of the schematic. A small presentation on PowerPoint including the schematic and digital photo will be submitted at the conclusion to the teacher.

Daily Plan:
Day 1
Key Question: What are the expectations for this project?

The Teacher provides the Student Scenario to the students. Have the students form teams of two. Allow the students five minutes to discuss the problem. Students begin listing information they already know in their engineering notebooks along with information they think they might need. The teacher will facilitate a discussion of what the students have written.
Introduce students to the main problem by providing them with the Essential question and the project description

Introduce students to the main problem by providing them with the Essential question and the project description
Cover with your students the design process, engineering notebook and design documentation requirements. Discuss the problem statement design brief, testing protocol and management plan. Review the elements of a good engineering report.

Teacher will provide a list of vocabulary terms that students will need to research. Student teams can break the lists up and determine how to define the terms. The teacher can assign a few words for the students to research each day so they have an understanding of the discussions as they occur. The teacher should also help the students outline the research they will need to do to be ready to work independently on the project at the end of the unit.

Day 2-3
Key Question: How does a transistor work?

The teacher will introduce students to transistor theory. Students should explore the resources area to begin their exploration of semiconductors and transistors. Students should take notes in their engineering notebooks with special attention paid to the schematic symbols of the components.

Day 4-5
Key Question: How do I know what the schematic symbols represent?

When the teacher judges the students know enough about semiconductors and transistors have the students begin working on the schematic symbols worksheet. They will utilize this sheet later to produce their schematic of the flasher. An answer sheet for the schematic symbols worksheet is provided.

Days 6-7
Key Question: How can I create a schematic from a model?

Have students assemble the Hallway Lighting found page 21 in the Electronics manual. Have students record their work in the engineering notebook. A major component of this model is the creation of the schematic showing the two switches, the light and the power supply. Be sure to check their schematics for accuracy.

Days 8-10
Key Question: How can I explain a circuit to someone else?

Have students assemble the Alternating Flasher found on page 30 of the Electronics manual. Student teams are responsible for creating a schematic diagram of the flasher along with an explanation of how the circuit works. Students should research the topics they don't understand.

Days 11-12
Key Question: What information is needed for my presentation?

Students create their schematic and explanation of the circuit to present.

Vocabulary:

Capacitor
Crystal Lattice Structure
Doping
Impurities
Light Emitting Diode
N-type
Phototransistor
P-Type
Resistor
RC Time Constant
Semiconductor
Thermistor
Transistor
Valence electron

Resources

Transistors
http://www.explainthatstuff.com/howtransistorswork.html
http://www.allaboutcircuits.com/textbook/semiconductors/chpt-2/bipolar-junction-transistors/
http://learn.parallax.com/node/258
http://learn.parallax.com/lightspectrum
http://hyperphysics.phy-astr.gsu.edu/hbase/solids/dope.html#c3

Capacitors
http://www.explainthatstuff.com/capacitors.html

Resistors
http://www.explainthatstuff.com/resistors.html
http://www.allaboutcircuits.com/textbook/reference/chpt-9/wires-and-connections/

Back to Lesson
Back

Optics

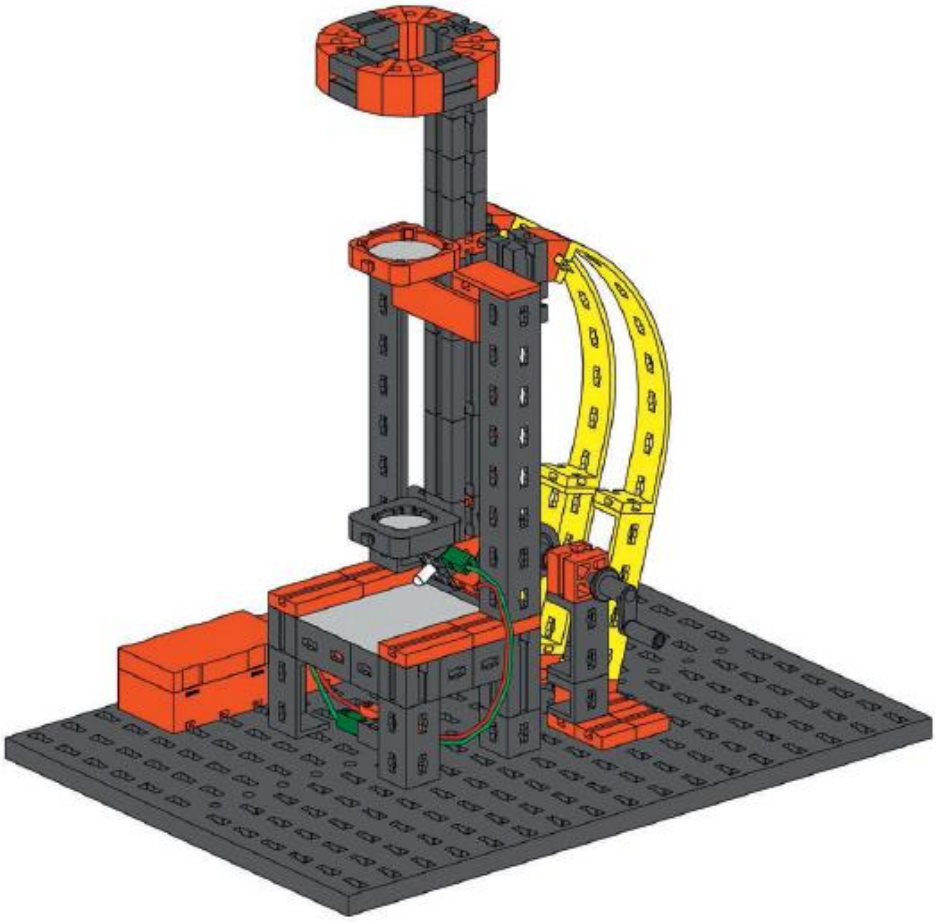

Introduction:

Optical lenses have been around since ancient times. Around 1600 the telescope was invented and later that century the microscope was also created. These inventions allowed humans to see brand new environments more clearly than ever.. In the 1960's the LASER was invented but did not have a practical use at the time. Optics deals with the science of light and the way it affects and is affected by other objects. In this unit students will be introduced to some forms of optics and how they behave and how to utilize them to solve problems. During the course of this project, students will design and implement an optical device(s) to solve a task. They must apply concepts related to optics and practice proper documentation techniques. They will become familiar with several types of optics, their theories and how light can be controlled.

The enabling learning activities are designed to help students:

- Utilize mathematical analysis, scientific inquiry and engineering design to develop solutions to open ended problems.
- Access, generate, process, and transfer information using appropriate technologies
- Apply the design process in the design of a system.
- Read and analyze detailed descriptions of optics and provide a concise summary for documentation purposes.
- Assign mathematical relationships to optics theories.
- Apply problem solving methodology in the creation of unique solutions to optics problems.

These authentic learning experiences will provide the students with awareness and skills valuable for a multitude of careers in the programming, robotics, automation, manufacturing and STEM related industries.

Concepts:

- Lenses are used to disperse or concentrate light rays
- There are three ways in which light paths can be altered.
- A telescope collects and concentrates light in order to create an image.
- The angle in which a beam of light hits a surface is the same as the angle reflecting from that same surface.
- Understand practical uses of optics in today's world.

Outline:

Optics
- History of optics
- Basic theories of optics

Lenses
- Types
- Uses & Applications
  - Microscope
  - Telescope

LASERS
- Theory
- Uses & Applications

Assessment:

Assessment comes in both formative and summative. It is an integral part of quality instruction. During the course of the projects one of the teacher's main functions is to work with student groups, keeping track of progress and providing formative assessment in the form of feedback and promoting reflection on the part of students. The focus should be on lifetime and 21st century skills. The goal of instruction is to promote abilities in research, problem solving, design, experimentation, testing and collecting data.

Rubrics are used in the assessment process to communicate expectations of quality of a task. Rubrics should be shared with students at the beginning of a project so they can clarify any misconceptions before beginning work. They can then build the skills and gather knowledge to solve the problem presented to the expectations of excellence described.

General Rubrics for Literacy tasks:
Argumentative_Pursuasive
Informational_Explanatory

Individual Project Rubric:
Optics Rubric

Essential Question
How can I design an optical system to work for me?

Student Scenario:
You are a design engineer working for a scientific research company that will be developing new instruments. You have been given the task of designing equipment to be used in classrooms and in industry around the world. After researching online resources on optics and participating in enabling activities you will design, build and test your models to be sure they function. The pieces of equipment being redesigned are the microscope, the telescope and a LASER engraver.

Once their prototyped equipment is constructed and working, the students should record a brief movie. Their final presentation should document the design process and then describe the features of your optical system that makes it unique.

Daily Plan:
Day 1
Key Question: What are the expectations for this project?

The Teacher provides the Student Scenario to the students. Have the students form teams of two or three. Allow the students five minutes to discuss the problem. Students begin brainstorming ideas in their engineering notebooks. The teacher will provide a list of vocabulary terms that students will need to research. Student teams can break the lists up and determine how to define the terms.
Students should begin by researching optics. Good sites for optics are found below.

Cover with your students the design process, engineering notebook and design documentation requirements. Discuss the problem statement design brief, testing protocol and management plan. Review the elements of a good engineering report.

Day 2
Key Question: How do we begin designing an optical system?

The teacher reviews optical systems and how they work with students. The teacher should provide the students with any information on optical systems and theory to aid them in organizing their thoughts. Students work through the activity while they record notes and create sketches in their engineering notebooks.

Day 3
Key question: If I see an idea about optics someplace how can I record it for later use?

After completing their research and notes, each group of students will build one of the models listed here.
Microscope found on page 13 of the Optics manual
Telescope found on page 22 of the Optics manual
Reflection course page 35 of the Optics manual

The teacher should explain the challenges from the book and assign the tasks accordingly. The students will record their optical system at work and save the video for use in their presentation video later. The students should record their progress, findings and calculations in their engineering notebooks.

Day 4-7
Key Question: How can I construct an optical device or system to do what I want it to?

Students will build their assigned optics system. The microscope team is challenged with utilizing different lenses as well as utilizing an optional light feature. The telescope team is challenged to determine its magnification power with the lenses provided. The reflection course team is going to plot a path mathematically for a light or laser to follow. Students should use digital photographs and sketches to record the progress in their engineering notebooks.

Day 8-9
Key Question: What information does my presentation need?

Students will finish their optical projects. They should record a brief movie to be presented to the teacher and the class. They should point out their research findings and record a short presentation about their designs.
Students should save their video to a shared folder and watch classmate's videos on the other subject areas.

Vocabulary:
Convex
Concave

Convergence
Divergence
Reflection
Refraction
Snell's law
Absorption
Focal length
Magnification factor
Wavelength
Frequency
Focus
lens
LASER

Resources:

Optics resources:
http://www.compadre.org/precollege/static/unit.cfm?sb=13&course=1
http://optics.synopsys.com/learn/kids/index.html
http://www.juliantrubin.com/fairprojects/physics/optics.html

LASER light:
http://spie.org/Documents/Courses/Education_Outreach/laserlight.pdf

Videos on optics:
http://www.neok12.com/Light-Optics.htm

Telescope:
http://www.wisegeek.com/how-do-i-build-a-telescope.htm

Optics for students:
http://www.kathimitchell.com/light.htm
http://www.optics4kids.org/home/content/classroom-activities/advanced/

Optics for educators:
http://www.nasa.gov/audience/foreducators/topnav/materials/listbytype/Optics.Guide.html
http://www.hsphys.com/light_and_optics.html
http://msp.ehe.osu.edu/wiki/index.php/MSP:MiddleSchoolPortal/Light,_Optics,_and_Lenses

Back to Lesson
Back

Digital Communication

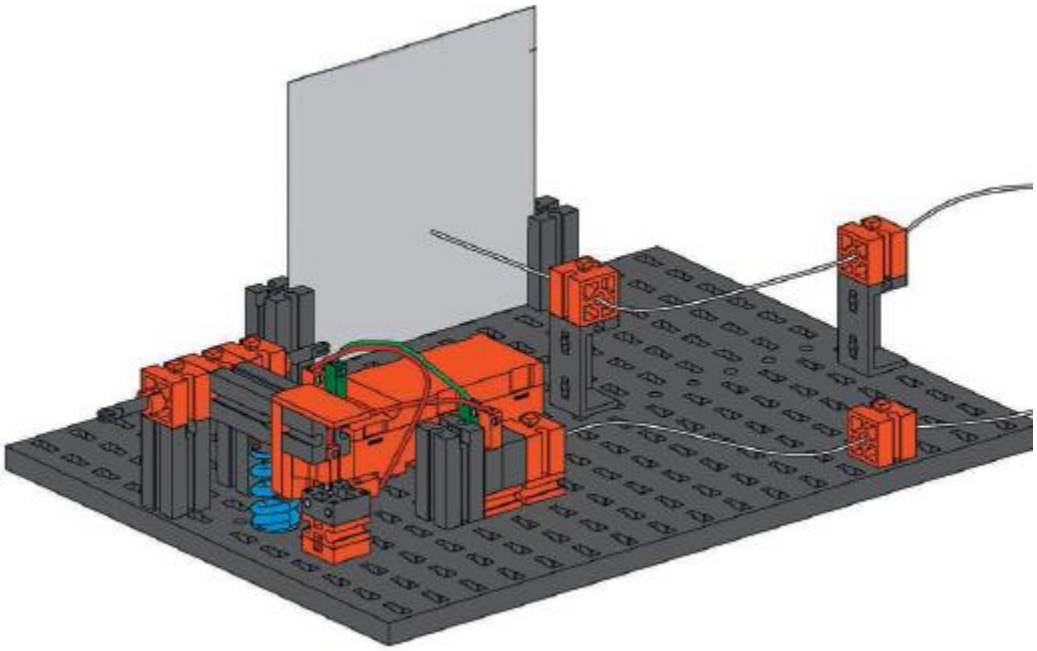

Introduction:

Communication is defined as the exchange of information. The telegraph is considered the first digital communication device and for the first time information could travel faster than man. In the 1960's there was a significant advances in data communication and the 8 bit character set was created which led to a standard code called ASCII. ASCII is the language computers use to speak to each other. During the 1970's researches were working with glass wire fibers and discovered that a strand could carry up to 65000 times more information than copper wire. This led to fiber optics and the ability to transfer data at very high rates of speed. Today we mostly communicate digital information through our computers, tablets and phones. In this unit students will be introduced to some forms of digital communication and how they behave. During the course of this project, students will design and implement a communication system to solve a problem. They must apply concepts related to digital communication and practice proper documentation techniques. They will become familiar with several types of communication systems and how they are utilized.

The enabling learning activities are designed to help students:

- Utilize mathematical analysis, scientific inquiry and engineering design to develop solutions to open ended problems.

- Access, generate, process, and transfer information using appropriate technologies.
- Apply the design process in the design of a technological system.
- Read and analyze detailed descriptions of communication systems and provide a concise summary for documentation purposes.
- Apply problem solving methodology in the creation of unique solutions to a communication problem.

These authentic learning experiences will provide the students with awareness and skills valuable for a multitude of careers in the programming, robotics, automation, manufacturing, communication and related industries.

Concepts:

- Data transmission has become more efficient and faster over time
- Recognize the basic elements of a digital communication system
- Understand practical uses of digital communication
- Fiber has become the medium of choice for just about every kind of communications today
- An optical fiber uses total internal reflection to transmit light over long distances

Outline:

Communication History
- Telegraph
- Morse code
- Digital communication
  - Bit
  - Byte
  - ASCII

Fiber optics
- Theory
- Application

Presentation

Assessment:

Assessment comes in both formative and summative. It is an integral part of quality instruction. During the course of the projects one of the teacher's main functions is to work with student groups, keeping track of progress and providing formative assessment in the form of feedback and promoting reflection on the part of students. The focus should be on lifetime and 21st century skills. The goal of instruction is to promote abilities in research, problem solving, design, experimentation, testing and collecting data.

Rubrics are used in the assessment process to communicate expectations of quality of a task. Rubrics should be shared with students at the beginning of a project so they can clarify any misconceptions before beginning work. They can then build the skills and

gather knowledge to solve the problem presented to the expectations of excellence described.

General Rubrics for Literacy tasks:
Argumentative_Pursuasive
Informational_Explanatory

Individual Project Rubric:
Digital Communications Rubric

Essential Question

How can I design a modern digital communication system to do what I want it to?

Student Scenario:

You are working for a military intelligence agency that has been given the task of designing a modern communication system to be used around the world. It might be utilized in tight spaces or in areas where it should not be seen. The system will use a known alphabet that is commonly familiar to all. After researching online resources on different types of communication and participating in enabling activities you will design, build and test your model to be sure it functions. You will create a short message and share it successfully with another group. You will brainstorm a sketch of your system to present for approval before building commences.
Once the system is constructed and working, the students should record a brief movie. Their final presentation should document the design process and then describe the features of your communication system that makes it unique.

Daily Plan:

Day 1
Key Question: What are the expectations for this project?

The Teacher provides the Student Scenario to the students. Have the students form teams of two. Allow the students five minutes to discuss the problem. Students begin brainstorming ideas in their engineering notebooks.
The teacher will provide a list of vocabulary terms that students will need to research. Student teams can break the lists up and determine how to define the terms.

Cover with your students the design process, engineering notebook and design documentation requirements. Discuss the problem statement design brief, testing protocol and management plan. Review the elements of a good engineering report.

Students should begin by researching communication history. Good sites for the vocabulary are found below.

Day 2
Key Question: How do we begin designing a communication system?

The teacher reviews the digital communication history and theory and how they apply to this project. The students should practice by sending a message to another group using ASCII code first. The teacher should provide the students with the link to the Morse code alphabet to aid them in organizing their thoughts. They should practice sending messages back and forth using Morse code. Students work through the activity and create possible sketches in their engineering notebooks. The teacher will pair your group with another group to trade messages.

Day 3
Key question: If I see an idea for a communication device someplace how can I record it for later use?

After completing their sketches and research, the students will build the Morse telegraph design on pages 55-57 of the Optics manual.
The students should record their progress and any changes to their design in their engineering notebooks.

Day 4-5
Key Question: How can I construct a communication system to do what I want it to?

Students should use digital photographs and sketches to record the progress in their engineering notebooks. The students should record their system communicating to another group and save the video for use in their presentation video. Students should discuss and incorporate other uses for fiber optics in their design such as warning indicators.

Day 6-7
Key Question: What information does my presentation need?

Students will finish their communication project. They should record a brief movie to be presented to the teacher and the class. They should point out their best concepts used and record a short presentation about their design. They should emphasize the advantages as well as the limitations of their project. Students should save their video to a shared folder and watch other classmates' videos.

Vocabulary:

Telegraph
ASCII
Bit
Byte
Encoder
Decoder
Input
Output

Discrete signal
Binary
Modem
Total Internal reflection
Fiber optics
Dispersion
Morse code

Resources:

ASCII codes:
http://www.ascii.cl/htmlcodes.htm
Telegraph:
http://www.howstuffworks.com/innovation/inventions/5-industrial-revolution-inventions8.htm
Video of fiber optics:
http://www.pbslearningmedia.org

Glossary Terms:
http://www.lanshack.com/fiber-optic-tutorial-glossary.aspx

How fiber optics works:
http://computer.howstuffworks.com/fiber-optic.htm
http://fiberu.org/basic/index.html

Morse code alphabet:
http://morsecode.scphillips.com/morse2.html

Back to Lesson
Back

Programming Control Systems

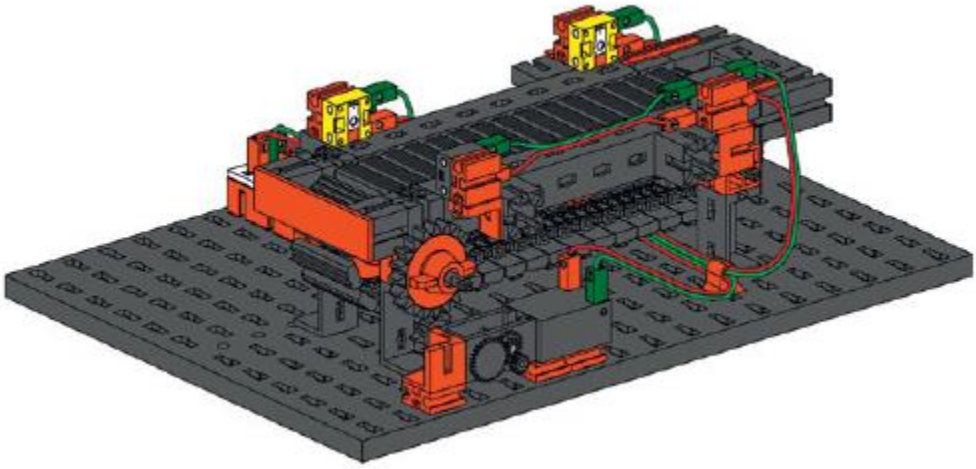

Introduction:

The purpose of this project unit is to introduce students to the process of designing, testing, troubleshooting, and documenting a simple system. During the course of this project, students will design and implement a program to control two automated systems. They will apply concepts related to flowcharting, open and closed loop systems and documentation techniques. Students will translate the given problem into the language that will run a computer to control the automation of a process. They will become familiar with techniques for controlling both open and closed loop systems.

The research and learning activities are designed to help students:

- Identify and apply appropriate methodology associated with logic.
- Utilize mathematical analysis, scientific inquiry and engineering design to develop solutions to open ended problems.
- Access, generate, process, and transfer information using appropriate technologies.
- Design control algorithms for the processing of sensor information and controlling output.
- Read and analyze detailed descriptions of programming situations and provide a concise summary for documentation purposes.
- Connect the relationship between the outputs and the inputs and expressed them in a flow chart.
- Apply problem solving methodology in the creation of unique solutions to programming problems.

These authentic learning experiences will provide the students with awareness and skills valuable for a multitude of careers in the programming, robotics, automation, manufacturing and related industries.

Concepts:

- Computer programs are collections of instructions that tell a computer how to interact with the user, interact with the computer hardware and process data.
- Control statements can be Sequential, Conditional (decision making) and/or Iterative.
- A flowchart is a diagram that represents a process.
- Some control systems utilize feedback while others do not.
- Control systems can be either digital or analog or both.
- Design is an iterative process.
- Automated systems perform with minimal human intervention.

Outline:

Methods of writing programs
- Flow charts
- Word problems

Program characteristics
- Open Loop System
- Closed Loop System
- Flow Chart
- PLC – Programmable Logic Control

Documenting Programs
- Adding Comments to programs
- Writing software documentation

Object Blocks
- Inputs
- Outputs

Loops
- Types
- exiting

Branching
- Digital

Assessment:

Assessment comes in both formative and summative. It is an integral part of quality instruction. During the course of the projects one of the teacher's main functions is to work with student groups, keeping track of progress and providing formative assessment in the form of feedback and promoting reflection on the part of students. The focus should be on lifetime and 21st century skills. The goal of instruction is to promote abilities in research, problem solving, design, experimentation, testing and collecting data.

Rubrics are used in the assessment process to communicate expectations of quality of a task. Rubrics should be shared with students at the beginning of a project so they can clarify any misconceptions before beginning work. They can then build the skills and gather knowledge to solve the problem presented to the expectations of excellence described.

General Rubrics for Literacy tasks:
Argumentative_Pursuasive
Informational_Explanatory

Individual Project Rubric:
Programming Rubric

Essential Question:

How can I create a program for my prototype so it will behave the way I envision?

Student Scenario:

You are a member of the design team of a firm that manufactures Garage door openers. You have been assigned to design the control system for the new door line that is coming out. The manufacturer has stated that the door should open and close smoothly using limit switches so the door can be adjusted to the frame in the home it will be installed in. There are also codes that there needs to be a safety system that will sense when anything is in the way and not let the door close until the path is clear. There is also an expressed desire to have a light that will come on for a minute when it is dark to allow people to see until they can get to the house. This light should automatically turn off to be energy efficient.

After researching online information on garage door opener regulations and programming as well as participating in enabling activities you will design a control system to meet the requirements. You will design a prototype garage door to demonstrate your program on. Your program should be completely documented to allow anyone to understand how the program functions.

Daily Plan:

Day 1

Key Question: What are the expectations for this project?

The Teacher provides the Student Scenario to the students. Have the students form teams of two. Allow the students five minutes to discuss the problem. Students begin listing information they already know in their engineering notebooks along with information they think they might need. The teacher will facilitate a discussion of what the students have written.

Cover with your students the design process, engineering notebook and design documentation requirements. Discuss the problem statement design brief, testing

protocol and management plan. Review the elements of a good engineering report.

Teacher will provide a list of vocabulary terms that students will need to research. Student teams can break the lists up and determine how to define the terms. The teacher can assign a few words for the students to research each day so they have an understanding of the discussions as they occur. The teacher should also help the students outline the research they will need to do to be ready to work independently on the project at the end of the unit. Students will conduct internet research on different types of control systems and their functions. They will enter their findings in their engineer's notebook.

The teacher should be sure that the RoboProLight software and drivers are installed on all the computers.

Day 2-3
Key Question: How can I organize my thoughts about what I want the controller to do?

The teacher begins by checking for questions about how the controller functions with the software.

Teacher provides the activity on Flow Charts. Students practice creating flow charts.
Students should have the teacher mark off their completion of the activity and store it in their engineering notebook.

Day 4
Key Question: How do computers interact with the outside world?

The Teacher reviews the vocabulary with the students checking for any difficulty in defining the terms. Other teams should offer their definitions, if a group has any difficulty. Teacher checks specifically about understanding of controllers.

The teacher leads a discussion of the BT Smart Controller and software interface and their purpose. The teacher will demonstrate hooking up the interface to the computers stressing safety.

The teacher distributes the document Introduction to the BT Smart Controller. Each student group will be given a controller to study while completing the assignment. Students should have the teacher mark off their completion of the activity and store it in their engineering notebook.

Day 5-7
Key Question: How does the computer know what I want it to do?

The teacher begins by discussing various types of interfaces with students. Students should understand that the controls of a car are an example of an interface.

The teacher then provides an overview of the RoboProLight Graphical User Interface. Teachers make sure students can launch the software.

Teacher provides the Introduction to RoboProLight Software activity. Students work through identifying various sections and recording the information. Students should have the teacher mark off their completion of the activity and store it in their engineering notebook.

When they finish the software interface the students should then work on the BT Smart Controller test activity. Students should record observations in their engineering notebooks. Once they finish with their observations they should then begin the exercise on Connecting the BT Smart Controller to the computer.

Day 6-7
Key Question: How does my dishwasher know when the dishes are clean?

The teacher leads a discussion of student thoughts on flow charts. Student groups should take a few minutes to discuss the most difficult part of the process and report to the main group. The teacher has the students write their own definition of what a loop is.

The teacher will provide the activity Open Loop Programming. Students begin the activity. The teacher answers questions from the groups about open loop programming and timers. Students should have the teacher mark off their completion of the activity and store it in their engineering notebook.

Day 8-9
Key Question: Where is open loop programming utilized?

Students begin by listing as many things as they can think of in 5 minutes that use open loop programming.

The teacher begins by leading a discussion on the similarities and differences of student observations. Students should build the Merry-go-round found on page 7 in the Introduction to Programming Robotics manual. Once students have constructed the model they will write an open loop program to run the Merry-go-round in one direction for 7 seconds. The program should stop the motor for a second then run the Merry-go-round backwards for 7 seconds and stop.

Students should make observations in their engineering notebook and record a copy of their program for inclusion.

Day 10-11
Key Question: How does a computer sense the world around it?

Students talk about the programs they wrote for the Merry-go-round. The discussion should then pay attention to how a machine actually knows when to accomplish a task.

The teacher will provide an introduction to closed loop programming and review the requirements with students. Students begin the activity on Digital Branching. They should demonstrate finished work to the teacher. Students should have the teacher mark off their completion of the activity and store it in their engineering notebook.

Students should add control of the motor to their example. Students should follow the instructions for adding the motor found in the Adding the Motor activity. Students should record observations and a copy of the program in their engineering notebook.

Day 12-13
Key Question: How do programs make decisions on the information they gather?

The teacher begins by having the students discuss Closed Loop programs. The teacher needs to focus the students on what happens when a loop is not flexible enough to accomplish what we want and a decision needs to be made in a program. Students should write an example in their engineering notebook. The students should break into their groups.

Have the students build the Refrigerator found on page 19 of the Introduction to Programming Robotics manual. Students should write a program that will turn the light on when the door opens. Have students record their observations and a copy of their program in their engineering notebooks.

Day 14-15
Key Question: How can I use other components to inform programming?

The teacher opens a discussion about all the various examples the students can think of that do not use switches to cause something to work. They might mention bathroom faucets that turn themselves on and off automatically. A supermarket door is another example.

The students should work on creating a digital branching program that uses a phototransistor. The teacher can direct them to the activity on the Phototransistor. Students should record a copy of the program in their engineering notebook.

Once they have finished the activity the students should build the Hand Dryer found on page 28 of the Introduction to Programming Robotics manual. Students should write a program that will turn the dryer on when the light beam is broken. They should have the fan run for two seconds after the hands are removed. Students should record thoughts, progress and a copy of their program in their notebook.

Day 16-23
Key Question: Why do I need a flow chart to solve this problem?

The class begins with a review of the project scenario. Students divide into teams to research garage door openers. Good information on the requirements can be found at http://www.dasma.com/PDF/Publications/TechDataSheets/OperatorElectronics/TDS351.pdf. Students should brainstorm a list of things the garage door opener should do and the order they should be done in. Students should then develop a flow chart for their program. Students should sketch a design for their garage door. All design documents should be kept in the engineering notebook. On the final day students should demonstrate the working of their opener plan. They should have a completely documented program to demonstrate.

Vocabulary:

Analog
Closed loop system
Digital
Feedback
Flowchart
Input device
Open loop system
Output device
Sensors

Resources:

Web pages

- Open vs closed loop:
  https://www.servocity.com/html/open_loop_vs__closed_loop.html#.Vj0NGLerTBQ
  http://www.ehow.com/about_6073255_open-closed-loop-motor-control.html
  http://www.controleng.com/single-article/open-vs-closed-loop-control/f8d8023a15738d0fcfe78d6a2d71dd60.html
- Garage door opener requirements
  http://www.dasma.com/PDF/Publications/TechDataSheets/OperatorElectronics/TDS351.pdf
- Drawing flowcharts with Word and Excel

https://support.office.com/en-us/article/Create-a-flow-chart-30f87402-ba3d-48c8-8e9f-a66bcee7e5aa
Flowchart Examples
http://www.rff.com/flowchart_samples.htm

Back

Activities

The activities are arranged in the order of the curriculum. They can be accessed from this page to make it easier for students to have them on their computers.

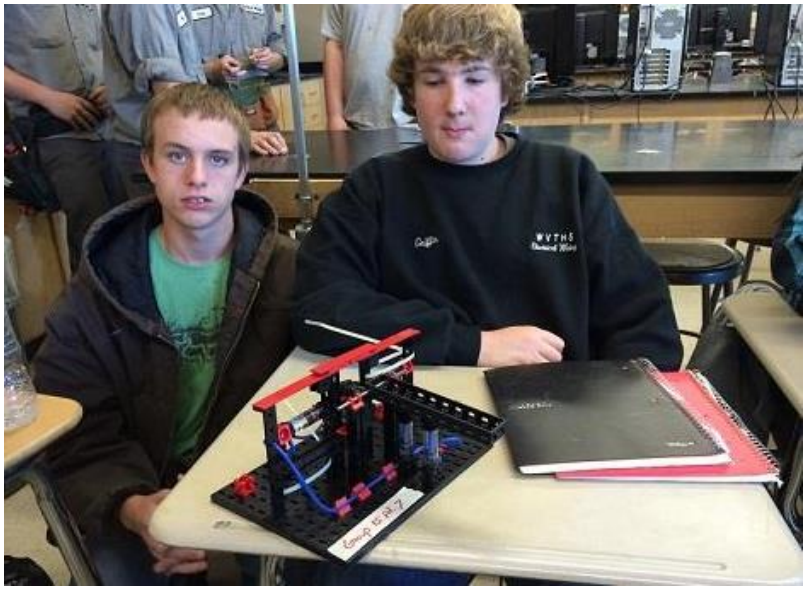

Sketching Activity
Linkage Diagrams
Mechanical Energy and Conservation of Energy
Mechanical Energy and Conservation of Energy Answer Sheet
Schematics
Schematics Worksheet
Schematics Worksheet Answer Sheet
Ohms Law and Power
Ohm's Law Worksheet
Flow Charts
BT Smart Controller
Introduction to ROBO Pro Light
BT Smart Controller Test
Connecting to the Computer
Open Loop Programming
Digital Branching
Adding the Motor
Sensors: Digital Phototransistor

Back

Sketching Activity

Purpose:

The primary objective of the sketch is effective communication. One of the most difficult things is to evaluate your work through someone else's eyes. If you put yourself in the position of the person who must interpret your sketch. If you have trouble finding the right piece of information someone else will not be able to either. Sketches are used for planning and design and to help visualization. Frequently several people work on the same sketch sharing ideas. Sketches are frequently used to create field drawings to record important information.

Equipment:

Pencil
Engineering notebook

Procedure:

All sketching should be done in the engineer's notebook with a pencil. No other tools are needed. Sketches that contain notes on them are considered annotated sketches. Below is an example of an annotated sketch in an engineer's notebook.

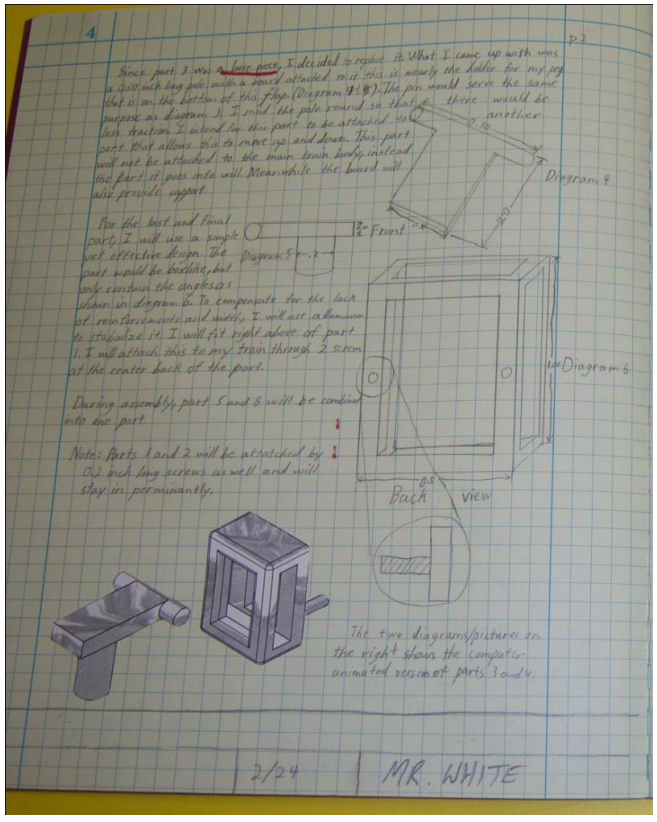

There are many different ways to sketch objects in your notebook. We always use pencil and we want to make the object or design look as real as possible. The first object we will practice sketching on is a 30mm building block. This following representation is called isometric, and it shows 3 sides at once. Each side is drawn approximately 30 degrees up from the horizon. Please be careful to pay attention to size and proportion. Now let's try sketching a 30 mm building block in an isometric view on our own. Students can also sketch a 15mm or other block of their choice in an isometric view.

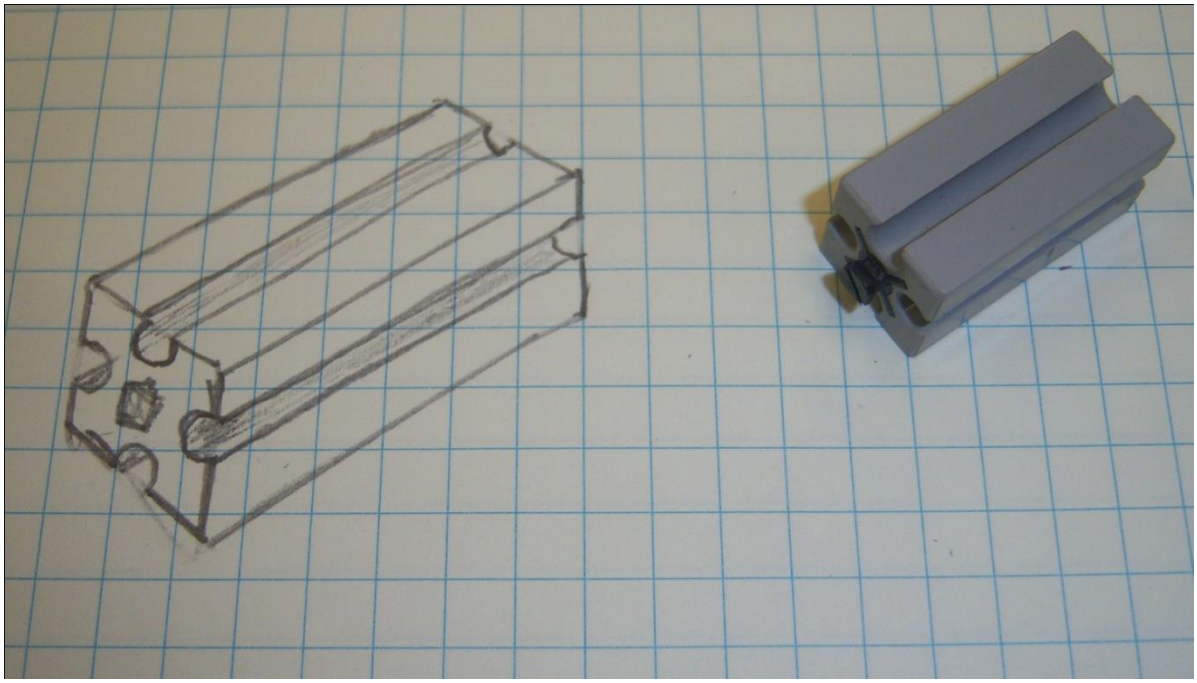

The next common way to sketch objects in our notebook is called mutiview or orthographic.. This is where we look at each side of the block straight on and sketch it as we see it. The lower left view is called a front view and this should be the most descriptive. The view on top is indeed the top view and the view on the right is the right side view. The short dashed lines are called hidden lines and indicate something is there but cannot be seen in that view. Now let's try sketching a multiview of a 30mm building block. Please keep all the views placed properly paying attention to size and proportion. Students can also sketch a 15mm block or another block of their choice. Final sketches should be shown to the instructor for approval.

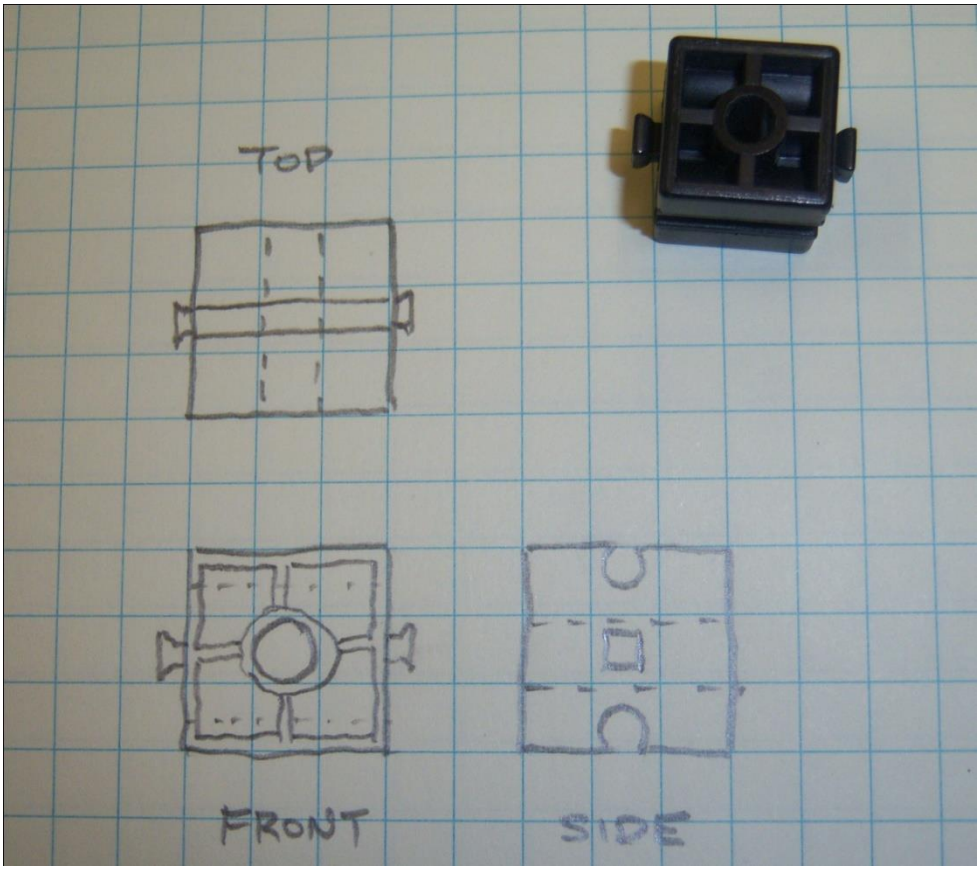

Conclusion:

Try sketching other objects using both graph paper and isometric graph paper. Once you have the sketch done on the graph paper try to create the same sketch without the graph paper.

Back to Lesson
Back to the Activity List

Linkage Diagrams

Purpose:

When sketching linkages it is standard practice to utilize schematic symbols to represent the parts. This allows a fast representation where the details can be filled in at a later time. It allows for the quick notation of existing systems and for quickly representing new ideas. In this activity you will be looking at mechanisms and creating a schematic representation of it.

Equipment:

Pencil
Engineering notebook

Procedure:

Since all the components of a mechanism are considered links the non-movable parts have a grounding symbol under them. See the fixed pivot point and housing symbols in the chart below. Everything else can move. The pins are placed where these components come together. The pin is a movable joint tying the two points together.

The chart below shows the most common symbols for you to use in your schematics.

	Pin Joint
	Fixed Pivot Joint
	Slider
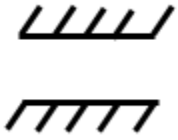	Housing

	Linkage

Browse to view the crank and slider at
http://www.technologystudent.com/cams/crkslid1.htm.
Watch the action. Compare the action to the schematic below.

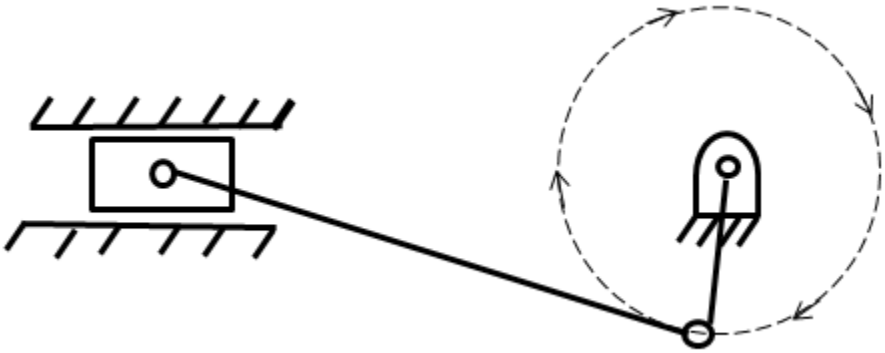

Label the parts on the schematic.

Conclusion:

Now browse to http://www.technologystudent.com/cams/link1.htm

You will see four linkages on that page. Sketch the four linkage schematics in your engineering notebook. Check with your partner to be sure you agree on what you have drawn.

Back to the Activity List
Back to Lesson

Mechanical Energy and Conservation of Energy

Purpose:

The concepts of mechanical energy and the conservation of energy are important aspects of understanding the physics of roller coasters. Understanding these concepts will help you design and construct a working prototype of your coaster. The use of correct units is very important when using equations to calculate the energy in a system.

Equipment:

Computers with internet access.

Procedure:

Find the engineering definitions and the metric unit of measure for each of the terms listed below. Use full sentences to explain the terms in your own words.

1. Force
    a. Definition-

    b. Units-

2. Friction Force

    a. Definition-

    b. Units-

3. Work
    a. Definition-

    b. Formula for Work: W =

    c. Metric units for each term in the Work formula:

4. Energy
    a. Definition-

    b. Units-

5. Mechanical Energy

a. Definition-

b. Units-

6. Kinetic Energy

    a. Definition-

    b. Formula for Kinetic Energy: KE =

    c. Metric units for each term in the Kinetic Energy formula:

7. Potential Energy

    a. Definition-

    b. Formula for Potential Energy: PE =

    c. Metric units for each term in the Potential Energy formula:

8. Velocity

    a. Definition-

    b. Units-

9. Vector

    a. Definition-

    b. Examples of vector quantities related to energy and motion-

10. Explain the concept of Conservation of Energy.

Solve the problems shown below. Write the equation you will use, show all your work and give your answer with the correct units.

11. A ball weighs 500 g. You roll it a distance of 5 meters and it takes 2.0 seconds. What is the kinetic energy of the rolling ball?

12. You raise the ball off the floor to the top of a meter stick. What is the potential energy of the ball?

13. Calculate the velocity of the ball at the bottom of the stick if it is dropped from the top of the meter stick.

Conclusion:

What are the sources of friction on the car of a coaster?

How does the conservation of energy apply to the roller coaster?

Back to Lesson
Back to the Activity List

Mechanical Energy and Conservation of Energy Answer Sheet

Purpose:

The concepts of mechanical energy and the conservation of energy are important aspects of understanding the physics of roller coasters. Understanding these concepts will help you design and construct a working prototype of your coaster. The use of correct units is very important when using equations to calculate the energy in a system.

Equipment:

Computers with internet access.

Procedure:

Find the engineering definitions and the metric unit of measure for each of the terms listed below. Use full sentences to explain the terms in your own words.

1. Force
    a. Definition- A **force** is a push or pull upon an object resulting from the object's interaction with another object.

    b. Units- Newtons, N

2. Friction Force

    a. Definition- The friction force is the force exerted by a surface as an object moves across it or makes an effort to move across it.

    b. Units- Newtons, N

3. Work
    a. Definition- The work done by a constant force of magnitude F on a point that moves a distance d in the direction of the force is the product,W=F*d

    b. Formula for Work: W = F*d

    c. Metric units for each term in the Work formula: F (Newtons), d (meter), W (Joule= N*m)

4. Energy

a. Definition- Energy is the capacity of a physical system to perform work. Energy exists in several forms such as heat, kinetic energy, light, potential energy, electrical, or other forms.

b. Units- Joule

5. Mechanical Energy

a. Definition-The mechanical energy is the sum of potential energy and kinetic energy present in the components of a mechanical system. It is the energy associated with the motion and position of an object.

b. Units- Joule

6. Kinetic Energy

a. Definition- The kinetic energy of an object is the energy which it possesses due to its motion.

b. Formula for Kinetic Energy: $KE = \frac{1}{2} mv^2$

c. Metric units for each term in the Kinetic Energy formula: KE (Joule), m (kg), V (m/s)

7. Potential Energy

a. Definition- The potential energy is the energy of an object or a system due to the position of the body or the arrangement of the particles of the system.

b. Formula for Potential Energy: PE = mgh

c. Metric units for each term in the Potential Energy formula: PE (Joule), m (kg), g (m/s^2), h (m)

8. Velocity

a. Definition- The velocity is the speed of an object and a specification of its direction of motion.

b. Units- V (m/s)

9. Vector
    a. Definition- A vector is a mathematical quantity that has both a magnitude and direction.

    b. Examples of vector quantities related to energy and motion- Velocity, acceleration, gravitational forces, and friction force are all examples of vectors.

10. Explain the concept of Conservation of Energy. Answers will vary. According to the Law of Conservation of energy the mechanical energy of an isolated system remains constant in time, as long as the system is free of all frictional forces, including eventual internal friction from collisions of the objects of the system. In any real situation, frictional forces and other non-conservative forces are always present, but in many cases their effects on the system are so small that the principle of conservation of mechanical energy can be used as a fair approximation. Though energy cannot be created nor destroyed in an isolated system, it can be internally converted to any other form of energy.

Solve the problems shown below. Write the equation you will use, show all your work and give your answer with the correct units.

11. A ball has a mass of 500 g. You roll it a distance of 5 meters and it takes 2.0 seconds. What is the kinetic energy of the rolling ball?
    Given: m= 500g = 0.5 kg
    d = 5 m
    t= 2 s
    Unknown: KE, v
    Equations: $KE = \frac{1}{2} mv^2$ $v=d/t$
    Solve for unknowns: v = 5/2 = 2.5 m/s
    KE = .5*.5 *2.5^2 = 1.56 J

12. You raise the ball off the floor to the top of a meter stick. What is the potential energy of the ball?
    Given: m= 500g = 0.5 kg
    h = 1 m
    g= 9.8 m/s^2
    Unknown: PE
    Equations: PE = mgh
    Solve for unknowns: PE = .5*9.8*1 = 4.9 J

13. Calculate the velocity of the ball at the bottom of the stick if it is dropped from the top of the meter stick.
    Given: m= 500g = 0.5 kg
    PE= 4.9 J
    Unknown: v
    Equations: PE=KE from Conservation of energy, assuming no friction
    KE = ½ mv²
    Solve for unknowns: v = sqrt (2*KE/m)
    Substitute values: v = sqrt (2* 4.9/.5) = 1.4 m/s

Conclusion:

What are the sources of friction on the car of a coaster?

How does the conservation of energy apply to the roller coaster?

Back to Lesson
Back to the Activity List

Schematics

Purpose:

Electricity makes everything work, from your lights in your classroom all the way down to your cell phone. Where does electricity come from? Electricity is a form of energy. It is a very convenient way to move energy. Energy cannot be created or destroyed. We can convert from one form of energy to another. In modern society we utilize one form of energy to create a different one. Since electricity is so convenient we generate lots of it. We burn coal, gas and oil to create steam. The steam is used to make turbines turn. A turbine is like a fan, in that it has blades. The steam hits the blades and the energy is transferred into mechanical rotating energy. The rotating shaft of the turbine is connected to a generator. The generator turns the rotating energy of the shaft into electricity.

Electricity is the flow of electrons from one location to another. Everything in the world is made up of small building blocks called atoms. Every atom has a number of electrons in addition to other particles. The number of electrons an atom has determines whether we consider it a conductor or an insulator. A conductor has electrons that we can excite and move easily. An insulator has electrons that are very happy where they are so it takes a lot more energy to get them to move.

What types of things are good conductors? Metals conduct electricity better than other materials such as wood or plastics. Some metals conduct better than others. The wire we use to connect electrical devices is made of a metal called copper. It is not the best conductor, but it is much better conductor than most metals and less expensive than gold or silver. Pennies are made of copper.

Insulators do not let electrons pass through them easily. Glass, plastics and ceramics are used as insulators as they are inexpensive. All the cords for our electrical devices have copper for the conductor and plastic coating to protect us from the electricity. Electricity is energy. Energy can burn people. If you have ever had a sun burn you know that energy can cause burns.

Electricity flows through wires. The push on the electrons to get them to move is called Voltage. Our cars have a battery. Most have a 12 volt battery. Our houses have 120 volts in the wires. The high tension wires that go between cities can be 750,000 volts. We have devices called transformers that allow us to change the push on the wires. You might have tall poles in your neighborhood. On the poles you will see big round devices called transformers. Before the electricity comes into your house we need to lower the voltage to make it safe. Other neighborhoods have green boxes which have transformers. The wires run underground. This helps keep them safe during storms. You should never touch a transformer or the wires that lead to them.

The flow of electricity is current. Once we push the electrons(with voltage) these electrons begin to flow. We can measure the flow. The amount of electrons is measured in a unit called Amps. This tells us how many electrons are going past a single point.

Schematic diagrams are like maps. They are used to show how all the electrical components in a system go together. Schematic drawings use a set of standardized symbols to show the arrangement of the conductors and components of your electrical devise or system. They are used to quickly convey the how a circuit should be set up using an organized two dimensional representation of the wiring. By using standardized symbols anyone who understands the symbols can read and interpret the drawing. This activity will show you the basics of how to create a schematic and use it to communicate your designs.

Schematic diagrams are used to show an element by element relationship of all the elements in a system. Schematics are drawings using a set of standardized symbols to show the arrangement and interconnections of the conductors and components of your electrical devise or system. They are used to quickly convey the how a circuit should be set up using an organized two dimensional representation of the wiring. By using standardized symbols anyone who understands the symbols can read and interpret the drawing. You should know that different countries use slight variations in symbols. This activity will show you the basics of how to create a schematic and use it to communicate your designs.

Equipment:

Motors (2)
Lamps (2)
Switches (2)
Wires
Battery compartment

Procedure:

The following table has the schematic symbols that will be used in this activity. You can find additional symbols at http://www.rapidtables.com/electric/electrical_symbols.htm.

Lamp	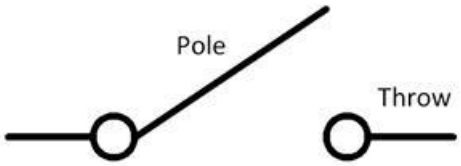 Single pole Switch
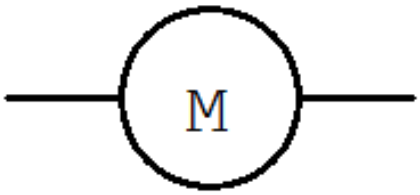 Motor	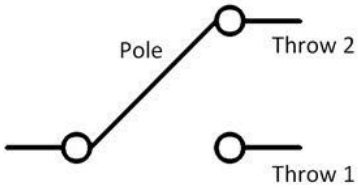 Single pole Double throw switch
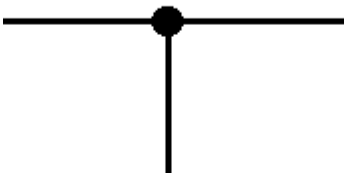 Wire connection used when wires joined	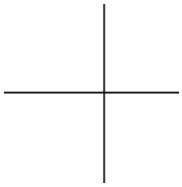 Two wires that do not connect have no node to avoid confusion

Simple Circuit

The following is a simple schematic of a closed circuit.

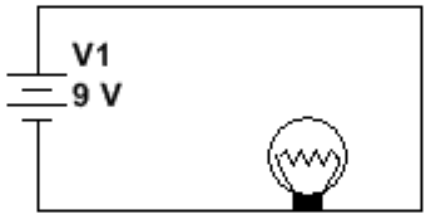

Battery holder Lamp

Using a wire, the lamp and the battery holder wire the circuit similar to the picture below. Get your teachers permission before turning on the battery holder.

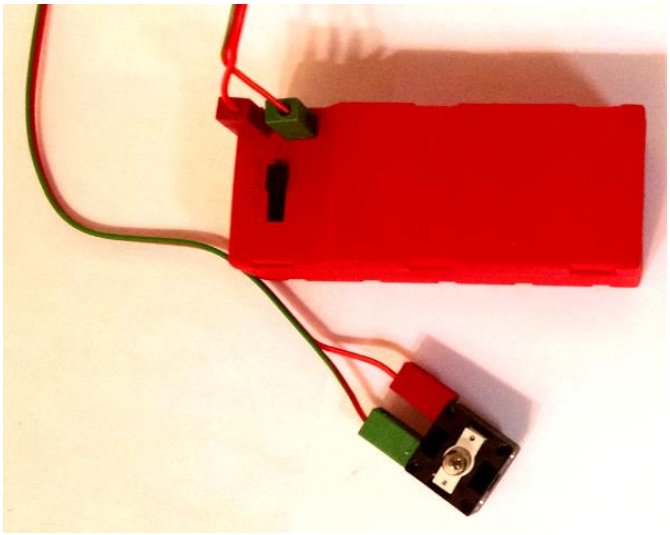

Record the schematic and your observations in the engineering notebook.

Series Circuit

This next section you will set up a Series circuit with two lamps. In a series circuit there is only one pathway for the electrons to travel.

Begin by connecting each lamp to different set of wires.

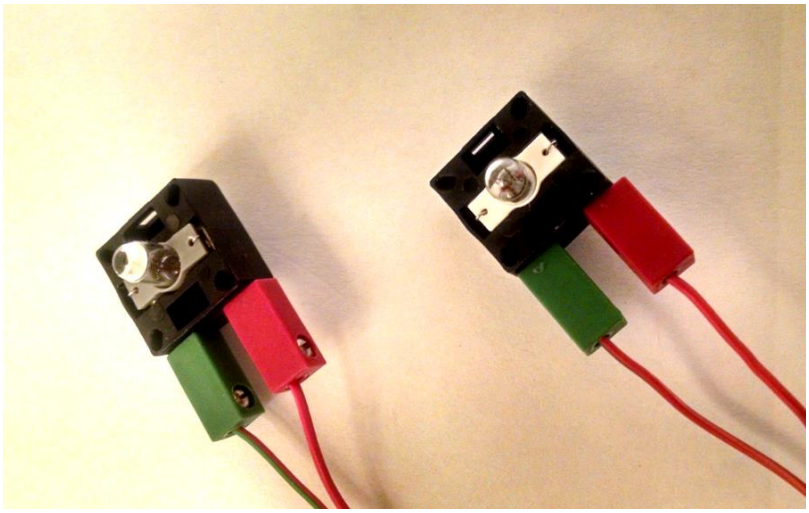

Plug one lamp into the battery holder as you did in the simple closed circuit above. Disconnect the green wire from the lamp you connected to the battery pack and connect the red wire from the other lamp in the place of the green wire. Then connect the green

wire from the second lamp to the first green wire. You now have a series circuit utilizing two bulbs. This circuit has only one path for electrons.

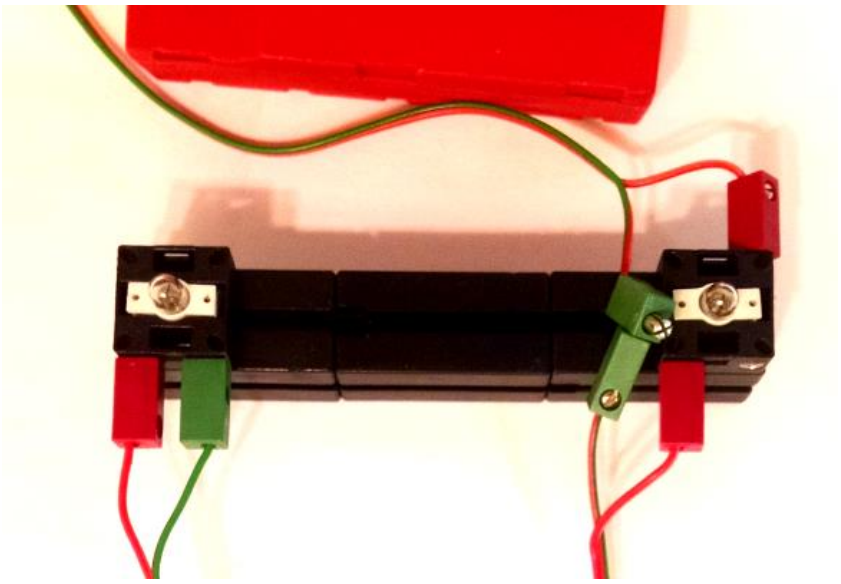

Draw a schematic of the circuit in your engineering notebook. Show the circuit and schematic drawing to your teacher and get permission to plug in the controller. When you have connected the power comment on what you see in your engineering notebook.

Disconnect the power form the circuit.

Parallel Circuit

Wire the circuit so the two bulbs are in parallel. It should look like the circuit below. Draw a schematic of the parallel circuit in your engineering notebook.

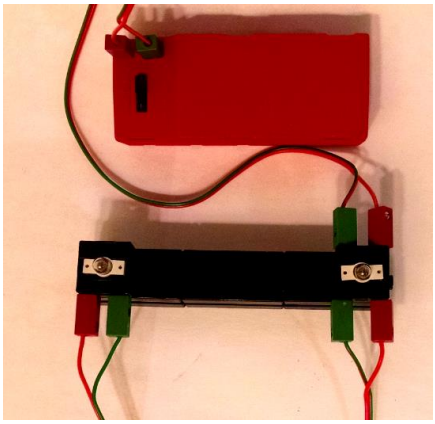

Obtain your teachers permission and turn on the circuit. How does the brightness of the bulbs differ from the series circuit? Are the outlets in your house hooked up in series or parallel?

Motors in Series and Parallel

Draw a schematic for a closed circuit using a motor a set of wires and the battery holder in your engineering notebook. Once you have wired the motor to the battery and shown the schematic to your teacher, turn on the power to the circuit. The motor should turn. Listen to the sound it makes.

Turn off the power. Wire a second motor in series with the first. The power will have to go through the first motor and then the second motor to return to the controller.

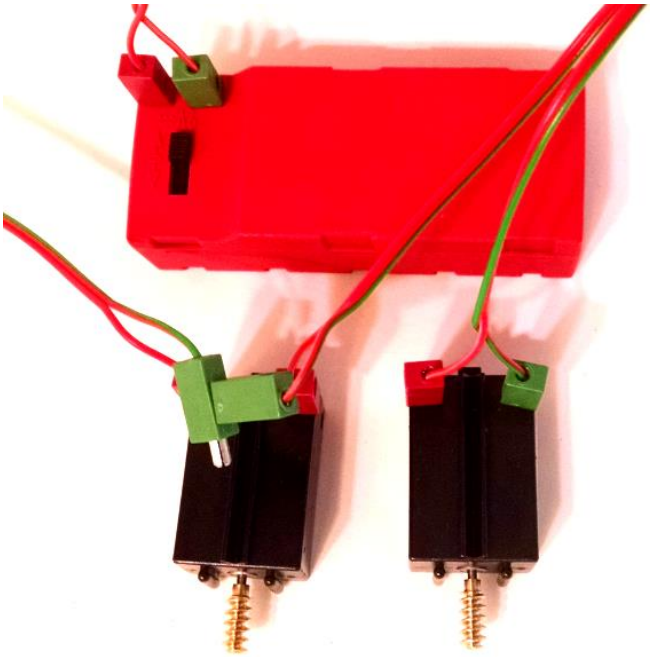

Draw the schematic in your engineering notebook. Once you have shown the schematic to your teacher turn the power on to the controller. Write an observation in your engineering notebook. Do you think the motors are moving as fast as the single one did? Why or why not?

Disconnect the power and wire the two motors in parallel. Draw the schematic in your engineering notebook. Once you have your instructors permission turn on the power. Explain the difference in speed between the series and parallel connections.

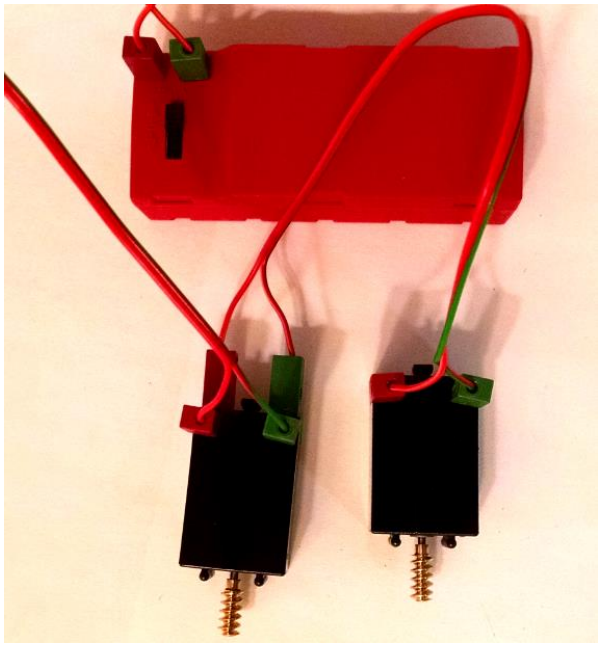

Switches

Switches are installed in circuits to control the flow of electrons through the circuit. They are categorized by the way they are actuated, by the number of poles and throws they have and their normal position. The actuator is the mechanical method that causes the switch to open and close. Common types include momentary, toggle, slide, rocker etc. A normally open switch is one where the circuit is open in its normal position and the actuator has to triggered in order to close the circuit and allow current to flow. A normally closed switch is one where the current can flow unless the actuator causes the switch to open blocking the current flow.

Poles provide the path for electrons. Throws control the circuits. The schematic below represents a single pole single throw switch (SPST). It provides a single path for electrons and controls one circuit.

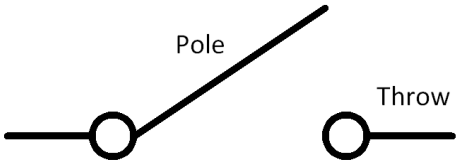

The basic fischertechnik switch is a Single pole double throw switch. It has a single path for electrons but two different paths. The schematic is shown below.

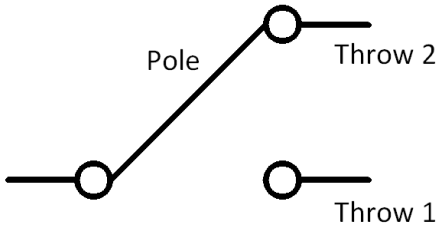

The picture below shows the actual switch. It is a momentary switch which means depressing the actuator causes a temporary changing of the path. As soon as you let go it reverts to its original position.

With the cover removed the internal components are visible. The number 1 connection is the middle contact. You can see that it is in contact with the contact with the number 2 connection making the 1 & 2 normally closed and the 1 &3 normally open. When the button is pushed the connection between 1 and 2 is opened and the connection between 1 and 3 is closed. This is a temporary connection as the spring will return the switch to its normal position as soon as the pressure is released.

Using switches

Wire the following: Get permission from your teacher before connecting to the power for any circuit.

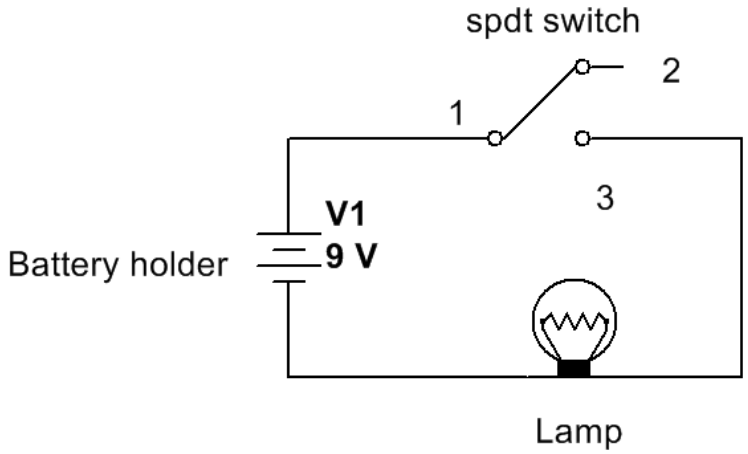

What happens when you connect the power to the circuit?

Describe what happens when you depress the switch.

Now wire the following circuit. This is similar to switches at the top and bottom of the stairs.

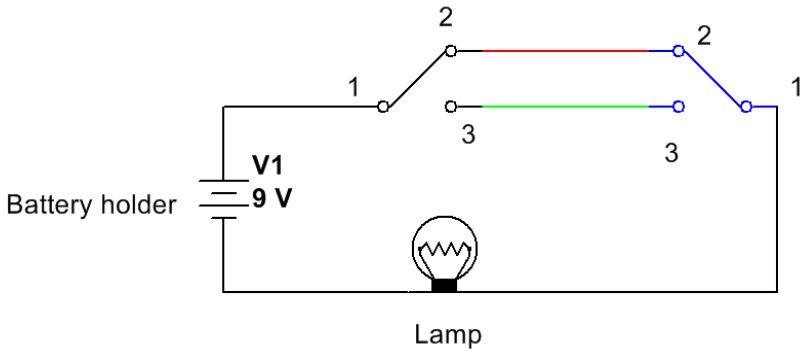

Using two SPDT switches allows you to create two pathways for electrons to take. Depress one switch and describe what happens to the lamp.

Keeping the first switch depressed push the second switch and record what happens.

Back to Lesson
Back to the Activity List

Schematics Worksheet

Schematics are a symbolic language. We use the schematic symbols and connecting wires to communicate the wiring of a circuit. Some of the common symbols are found below.

Lamp	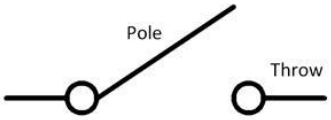 Single pole Switch	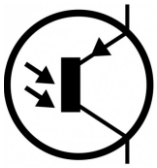 Phototransistor
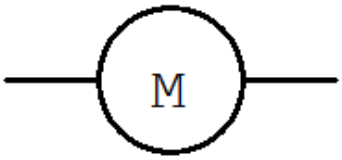 Motor	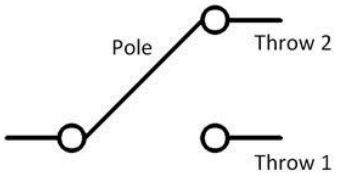 Single pole Double throw switch	Resistor
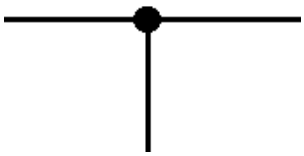 Wire connection used when wires joined	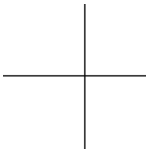 Two wires that do not connect have no node to avoid confusion	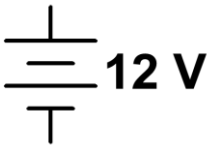 Battery or power supply
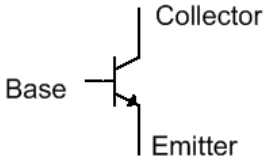 NPN Transistor	Capacitor	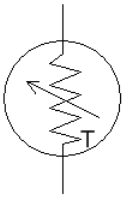 Thermistor
Light Emitting Diode		

1) Draw a schematic for a circuit that has a battery a single pole switch and a motor.

2) Draw a schematic for a circuit that has a battery, a double throw switch and a lamp on both sides of the switch.

3) Draw a schematic that utilizes a battery, a lamp, a switch and motor so that the lamp is always on and the switch controls the motor.

4) Draw a schematic that utilizes a battery and two lamps so that both lamps will be the same brightness as a single lamp.

Back To Lesson
Back to the Activity List

Schematics Worksheet Answer Sheet

Schematics are a symbolic language. We use the schematic symbols and connecting wires to communicate the wiring of a circuit. Some of the common symbols are found below.

Lamp	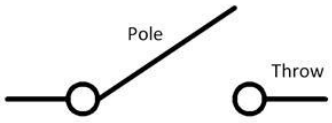 Single pole Switch	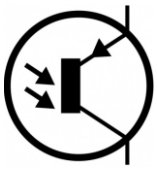 Phototransistor
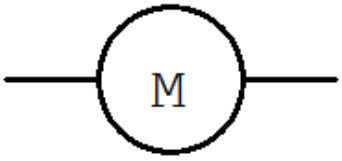 Motor	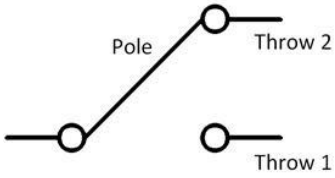 Single pole Double throw switch	Resistor
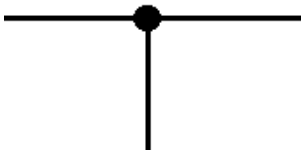 Wire connection used when wires joined	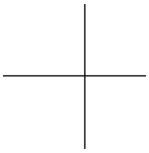 Two wires that do not connect have no node to avoid confusion	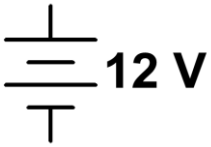 Battery or power supply
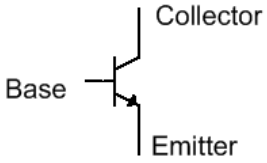 NPN Transistor	Capacitor	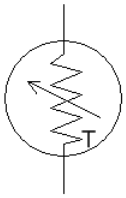 Thermistor
Light Emitting Diode		

1) Draw a schematic for a circuit that has a battery a single pole switch and a motor.

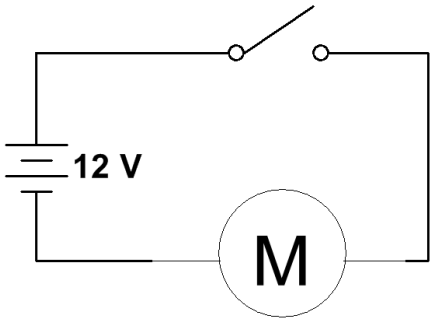

2) Draw a schematic for a circuit that has a battery, a double throw switch and a lamp on both sides of the switch.

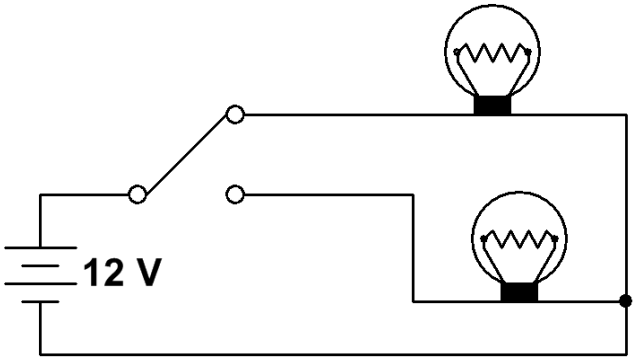

3) Draw a schematic that utilizes a battery, a lamp, a switch and motor so that the lamp is always on and the switch controls the motor.

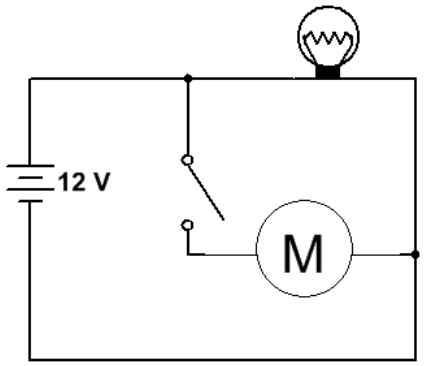

4) Draw a schematic that utilizes a battery and two lamps so that both lamps will be the same brightness as a single lamp.

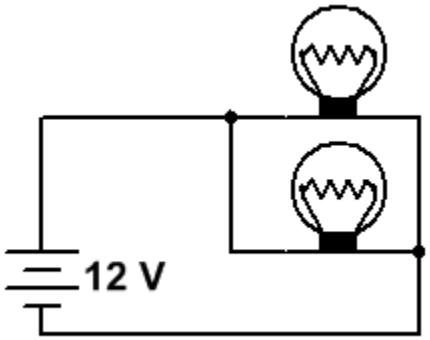

Back to Lesson
Back to the Activity List

Ohms Law and Power

Purpose:

Ohms law expresses the relationship between voltage, current and resistance. We use Ohms law to help us predict behavior of our components. We say the current is proportional to voltage and inversely proportional to resistance. If we take a motor or lamp of known resistance and increase the voltage, the lamp will glow brighter and the motor turn faster. Similarly if we reduce the voltage applied the lamp will grow dimmer and the motor slow. This relationship is known as Ohms law.

Electrical power is measured in watts in Direct Current situations. A Watt is equal to the work done in one second by one volt of potential difference moving one amp. Simply stated P=V X I or the total power is equal to the voltage times the current used. We can use the wattage to compare things. The light bulb in your lamp might be rated at 60 Watts. Another light bulb giving off the same light might be rated at 13 Watts. This is why many people are switching older style incandescent bulbs for LED or Compact Fluorescent ones as they cut the energy usage to accomplish the same work.

Procedure:

Open the webpage describing the Ohm's Law Wheel. This is found at http://www.ohmslawcalculator.com/ohms_law_wheel.php. This wheel is a handy device for showing the relationship between all the devices.

Use the wheel to assist you in solving some of the following problems. Show all work in your engineering notebook.

A fischertechnik lamp is measured at 9 ohms of resistance when cold. 9V is placed across the lamp. Calculate the startup current for the bulb. Show your formula and work in your engineering notebook.

Because of the way a lamp behaves it draws the most current when it is warming up. As the lamp gets brighter the voltage has to work harder to excite the filament. The hot resistance of the bulb is 85 ohms. If 9V is place across the bulb, how much power is the lamp consuming if the lamp is at full brightness?

If the limit on each motor channel is ¼ amp at 9V how many bulbs can you connect to each motor output of the BT Smart Controller?

The startup resistance of a fischertechnik motor is measured at 10.6 ohms. You can find this by measuring the resistance between the terminals with the motor stopped and no current applied. If we apply 9V to the motor, calculate the starting current of the motor. Show all your work in the engineering notebook.

The design of the motor allows it to reuse most of the collapsing magnetic field to offset the current required. This is why a motor when running with no load draws .059 amps in the example. What is the running resistance of the motor in this situation?

When the motor in the above situation is fully loaded driving a mechanism it is drawing .225 amps. What is the power consumed by the motor in driving the mechanism if the voltage is at 9V? Show your work in your engineering notebook.

Conclusion:

We use Ohm's law and Watt's laws to help us understand what is happening in circuits and keep us from overloading any one circuit. If a circuit is overloaded a lot of heat will be generated and a fire can result. To help us prevent that we use a special type of switch called a circuit breaker. Talk with your partner and see if you can figure out how a circuit breaker prevents circuits from overloading.

Back to Lesson
Back to the Activity List

Ohm's Law Worksheet

Read the article on Ohm's Law first.

1) Ohm's Law defines the relationship of what 3 elements? Write the names here.
- Voltage
- Current
- Resistance

2) Voltage can be described as the _____behind electron flow.
- Push behind the electrons
- Also known as Electromotive Force

3) Current is the measurement of the flow of _____ in a circuit.
- Electrons

4) Resistance it the _____to current flow.
- Opposition to current flow

5) If a TV utilizes 2 amps of current and the wall supply is 120V what is the resistance of the TV. Show your work.

$$I = \frac{E}{R} = R = \frac{E}{I} = \frac{120}{2} = 60\ Ohms\ of\ Resistance$$

6) A toaster utilizes 10 amps of current. With the wall supply at 120V what is the resistance of the toaster?

$$I = \frac{E}{R} = R = \frac{E}{I} = \frac{120}{10} = 12\ Ohms\ of\ resistance$$

Back to Lesson
Back to the Activity List

Flow Charts

Purpose:

Flowcharts are a graphic representation of an algorithm, often used in the design phase of programming to work out the logical flow of a program. Flowcharts use simple geometric symbols and arrows to define relationships between elements. This activity will introduce you to flowchart symbols. Since Robo Pro is software based on flow charts this will help you understand the logical flow of a Robo Pro program.

Equipment:

Paper
Pencil

Procedure:

While there are numerous symbols used by professional programmers we will concentrate on the ones used most often. You should familiarize yourself with the basic shapes and what they represent.

The Terminator block is used to indicate the Start or End of a program.

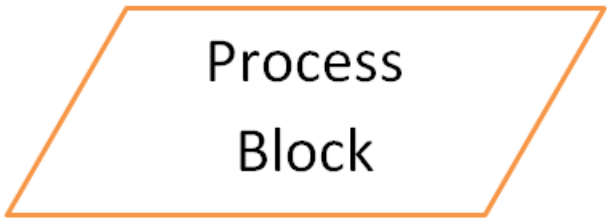

The process block represents a Process that occurs. This might be turning a motor or lamp on, getting the value of a variable, or setting input or output pins.

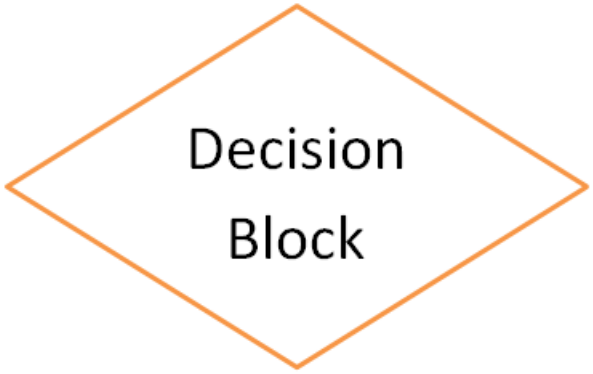

The Decision block is used to branch the program after comparing variables or checking the position of switches.

Data blocks are used to assign variables and allow us to set parameters. This shape is also used for assigning inputs and outputs to variables as well as defining delays.

Blocks are connected by arrows called Flow Lines which show how the blocks connect together.

Review the flow chart that follows. Step through it to follow the logic it is mapping out.

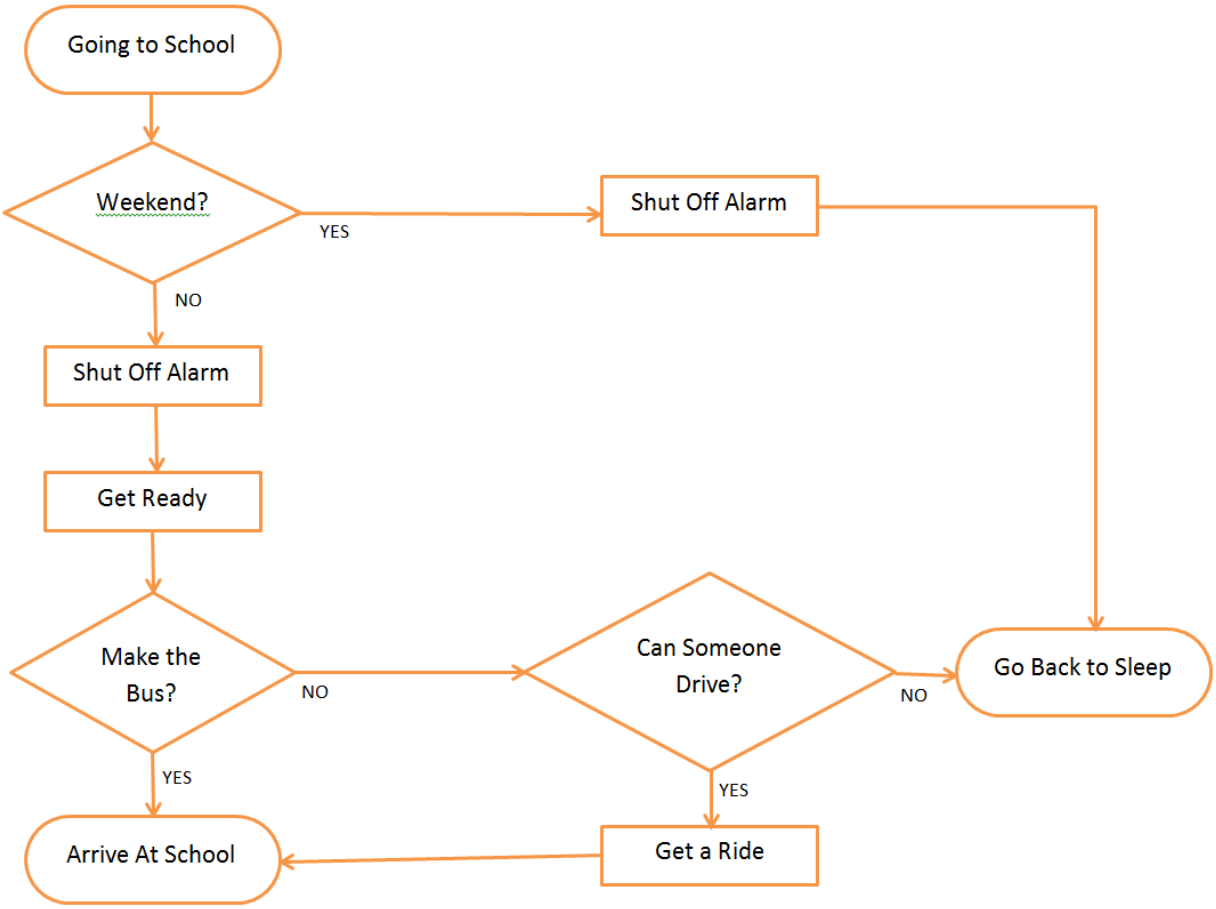

What is the eventual course of action if it is the weekend?

If it is not the weekend and you missed the bus what is your next action.

Conclusion:

Using the information from the flowchart section above prepare a flow chart for each of the following problems and attach them to this sheet.
1. Create a flow chart for placing toothpaste on a toothbrush and then brushing your teeth for 45 seconds.
2. Create a flowchart for creating a peanut butter and jelly sandwich.
3. Create a flowchart for helping a three-year-old child put on their jacket.

Back to Lesson
Back to the Activity List

BT Smart Controller

The BT Smart controller is the brain of the kit. The controller listens and talks to the computer and can follow directions. Knowing how things are connected will help you control the models you build.

Place the following labels on the picture below:

Power input
Ground
I1 positive input
Inputs
Motor 1 output
Motor 2 output
USB cable connection

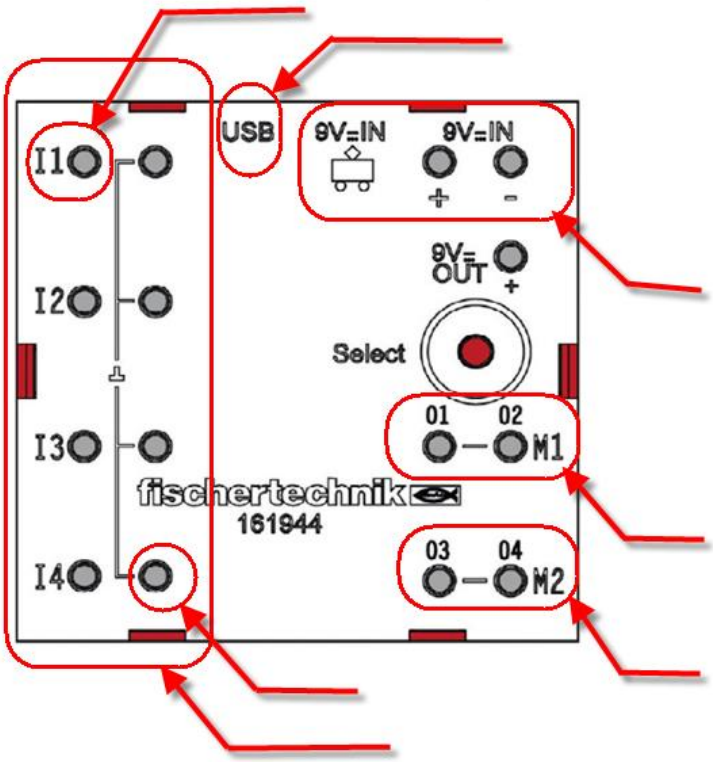

Back to Lesson
Back to the Activity List

Introduction to ROBO Pro Light

The image below is what you see when you open the ROBO Pro software. Lable the five areas of the screen.

Smart Controller Connection
Program Elements
Test Window
Toolbar
Working Screen

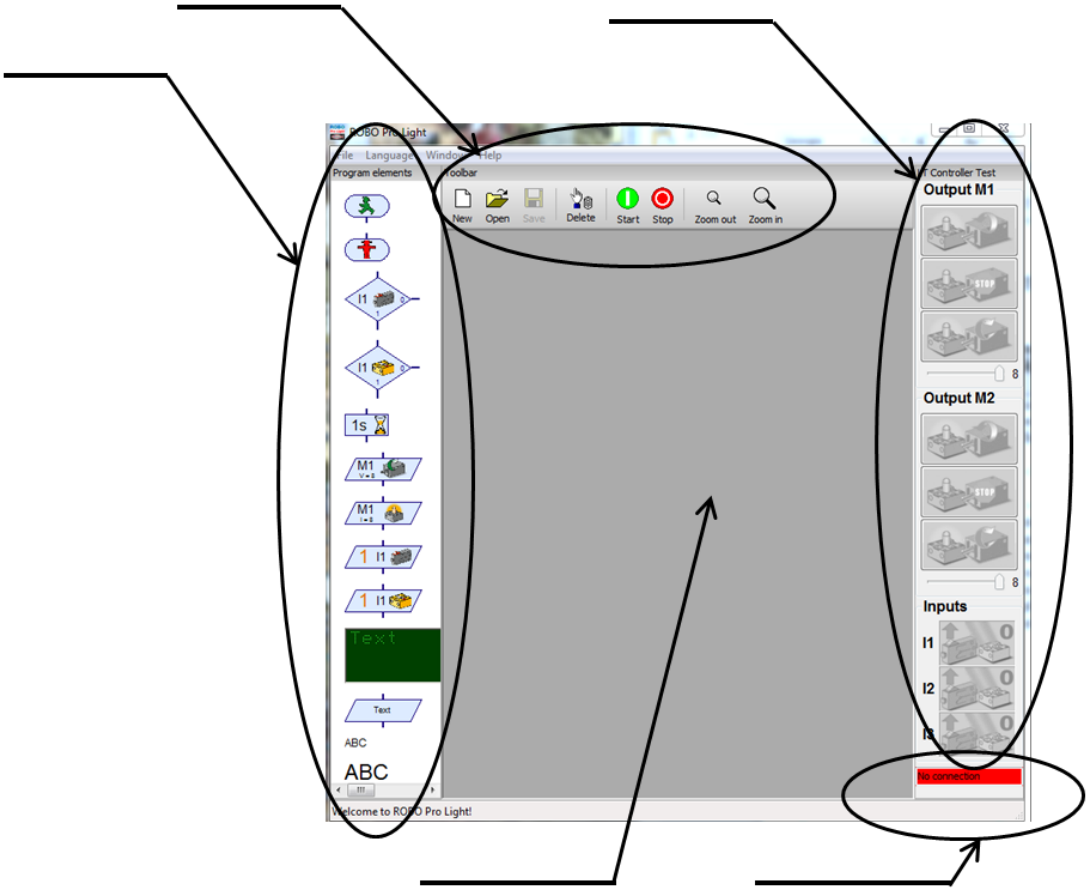

[Back to Lesson](#)
[Back to the Activity List](#)

BT Smart Controller Test

Before you can hook up and control a model with the interface you need to understand how it works. This exercise is designed to introduce you to the interface and help you understand how the control programs function.

Building the test setup

To complete this exercise you will need a few components.

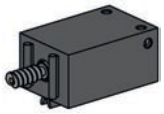

137 096
Motor XS
1

141 426
20 mm connecting wire
2x

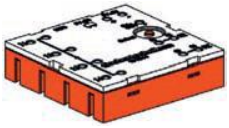

BT Smart Controller
147 225
1x

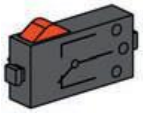

37 783
Mini Switch
1x

You should be familiar with how the components go together at this point. Ask for help if you need it. Do not connect your controller to the computer until your teacher gives you the OK.

We will be connecting a motor and a switch to the controller. Each will need one of the connecting wires. The picture below shows the switch. In the picture below you see the three connections of the switch. The middle pin is labeled 1, the bottom pin is labeled 2 and the top pin is labeled 3.

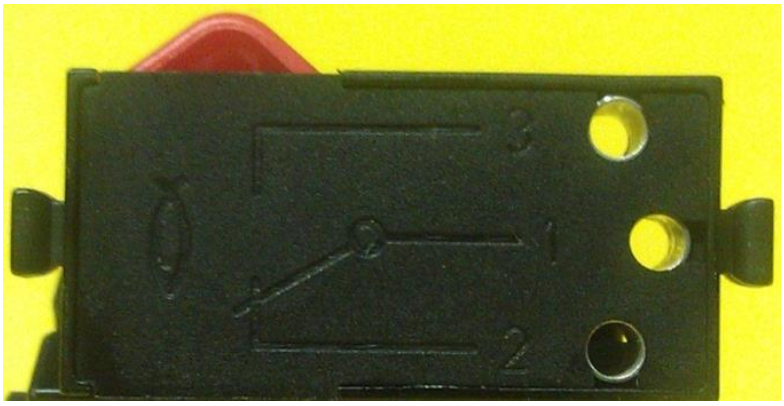

For this exercise we will connect the wire to holes 1 and 3. Connect the red wire to hole 1 and the green wire to hole 3. It should look similar to the picture below.

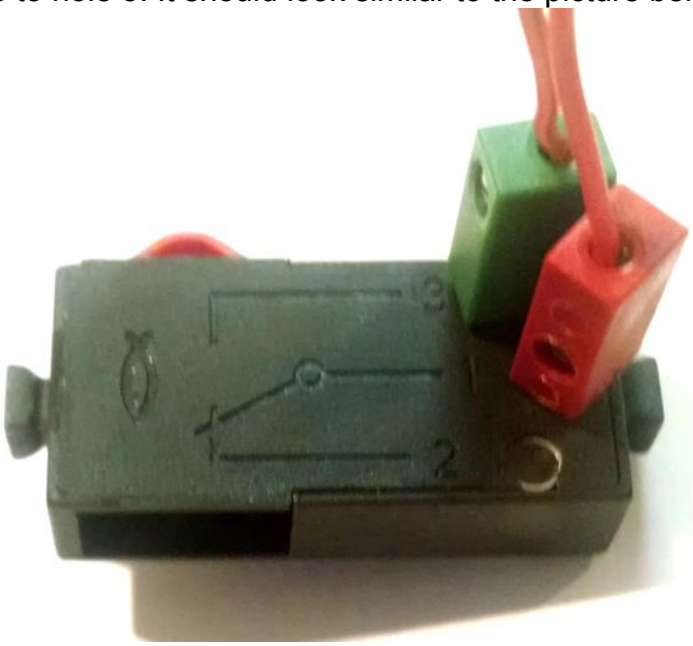

We need the switch to be stable so slide the pin of the switch into the Groove on the interface on the side near the I1 section.

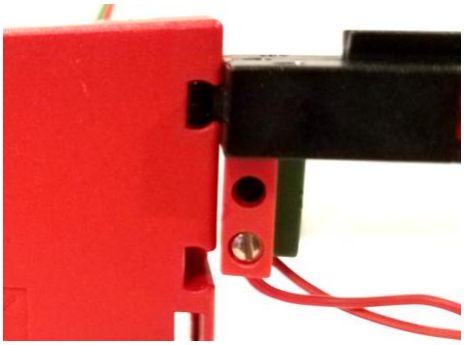

Place the green connector in the ground hole of the I1 connection. When you are done it will look like the picture below.

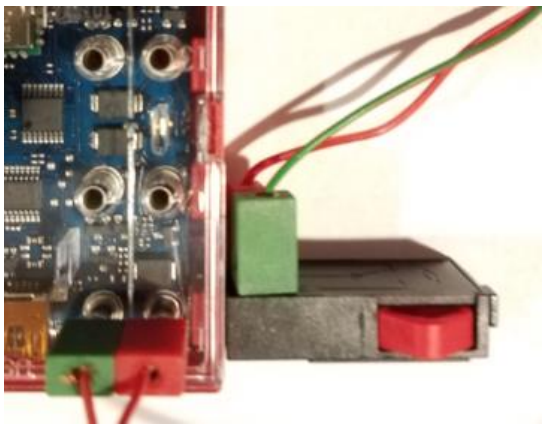

Place the motor with the smooth side down on the table. Connect the red and green wires by plugging them into the holes as shown in the picture below.

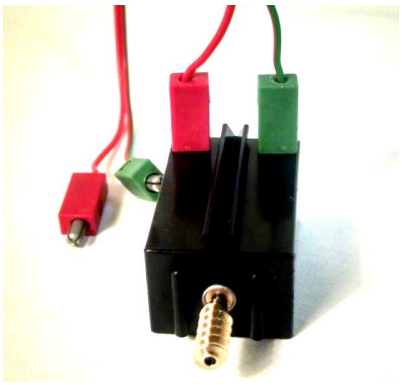

Slide the pin of the motor into the groove on the side of the controller near the M1 section.

Connect the wires to the Motor One (M1) connector. Your setup should look like the one below.

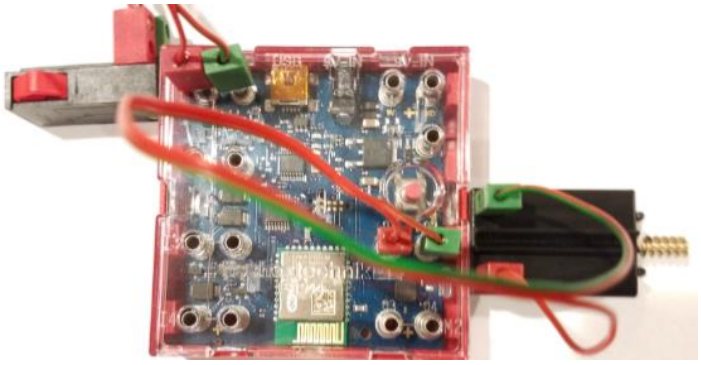

Back to Lesson
Back to the Activity List

Connecting to the Computer

After your teacher checks out your wiring you are ready to connect to the computer.

Connect the BT Smart Controller to the computer using the USB cable. With ROBO Pro open look in the lower right had side of the screen and locate the BT Smart Controller Connection indicator. If it is red, there is no connection and you should ask for help. If it is green you are ready to go.

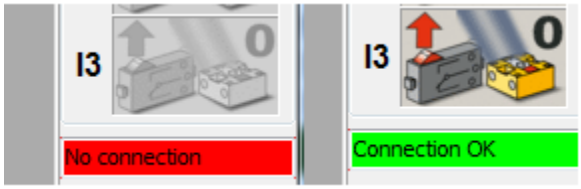

You will also see the items in the BT Smart Controller Test are no longer greyed out.

To test for communication push the button down on the switch. You should see the Input 1 register that it is being pushed. Notice it is showing a 1 instead of a 0.

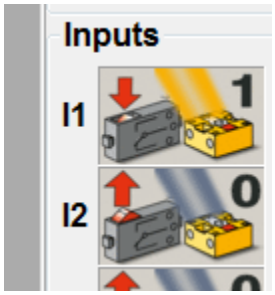

Let go of the switch. Move your mouse up to the Output M1 section. Notice the Stop is highlighted and the others are greyed out.

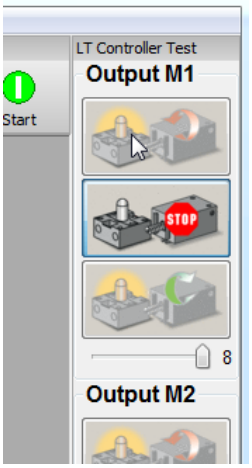

Click on the top icon which is the motor counterclockwise direction. You should hear your motor begin to turn. The top icon will be true color and the stop button greyed out. To stop the motor, left click on the STOP button. The motor should stop and the STOP button will be bright once more.

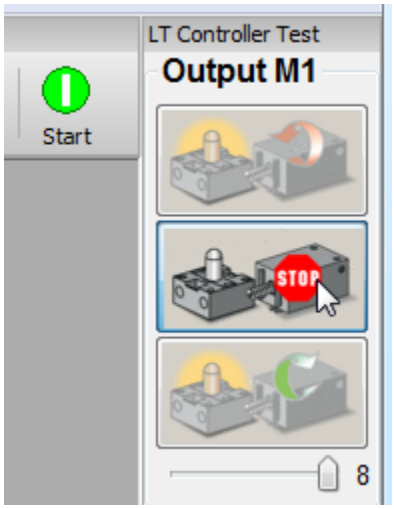

Back to Lesson
Back to the Activity List

Open Loop Programming

Purpose:

A loop in programming allows for code to be repeated. An open-loop system is one in which a control system receives no feedback as the system is running. There is an input, a process and then an output. For example when you put your dishes in the dishwasher and turn it on, the dishwasher runs through its cycle. The dishwasher doesn't know it the dishes are clean at the end or not. A human made a decision on how long the dishwasher will run and a timer turns off the machine when it is done. In this activity you will be learning about ways to control machines with no feedback.

Equipment:

BT Smart Controller
RoboPro
Light
Motor
Wires

Procedure:

Open loop programs run a machine or robot with no other input once they are turned on. The most common type of open loop control involves a timer to control action.

Setting up the program:

Open ROBO Pro Light. Start a new file.

You will be using the following programming blocks:

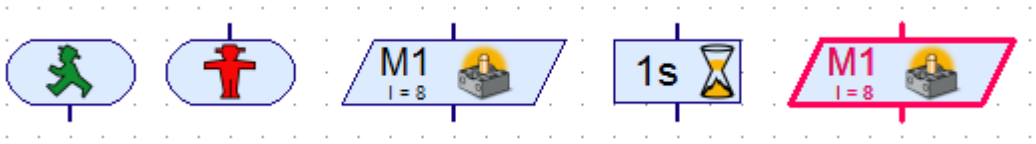

Drag one of each onto the screen.

Right click on one of the M1 elements. This opens a dialog box. Select the top right icon. This will turn the motor control off.

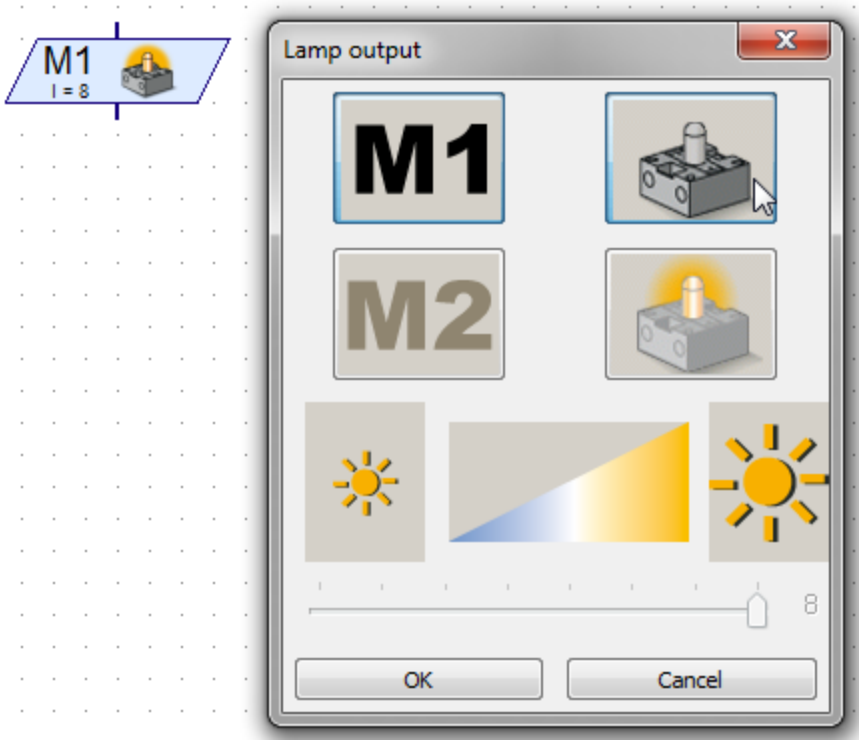

Select OK to exit the dialog box.

By right clicking on the Time Delay icon you will be able to change the duration time of the wait element

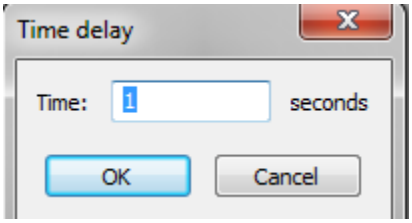

Create the following program. Arrange the icons and draw the flow arrows between the blocks. Do this by hovering over the terminal of the element until you see the hand with the pencil appear. Left click on the first block to attach a flow arrow. Hover over the terminal of the next element and left click again to attach the flow arrow.

Wire the elements together to create a flow from the start program element to the end program element.

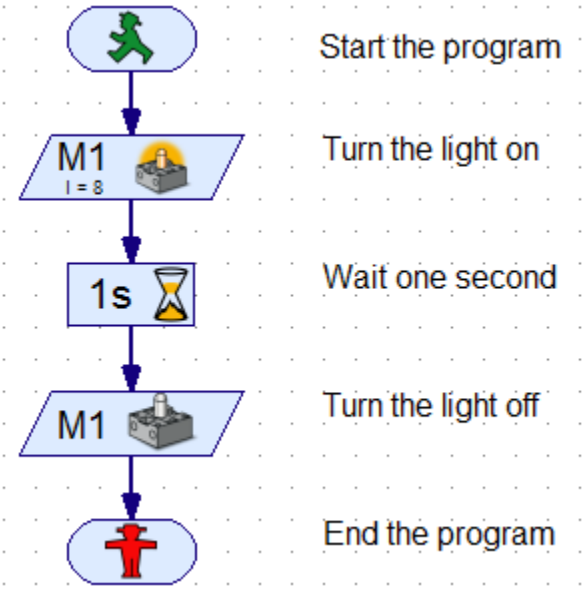

To add text for the comments select the icon for text from the menu.

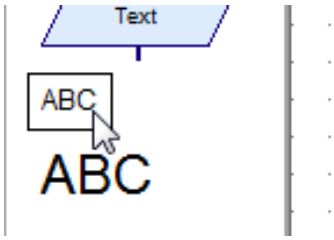

Click where you wish to begin typing. Good programmers always annotate their programs so other programmers can see what the intent of the program is.

Setting up the hardware:

Connect the lamp to the M1 connections shown below.

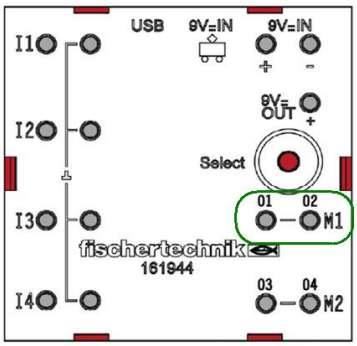

The setup should look like the picture below.

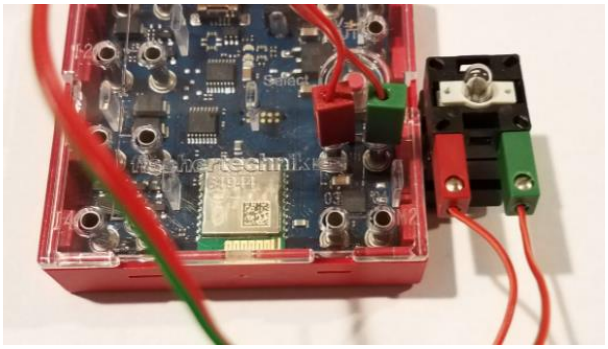

Run the program. The light should come on for a second and then turn off and the program ends.

Loops

To be an official loop the program must be changed to remove the end of program and return to another place. Modify your program to look like the following.

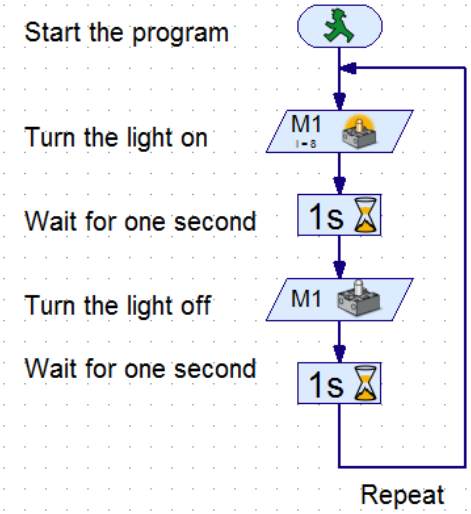

What should happen when you run the program? Run the program and see if you are correct. Since this program does not have an end you will have to cancel the program to stop it.

Conclusion:

Write a program to turn the light on for three seconds and off for 2.

Write a program to turn the light on for 5 seconds, off for 2 then on for 3.

Back to Lesson
Back to the Activity List

Digital Branching

Purpose:

In computer programming a loop is a sequence of instructions that is repeated until a condition is reached. Once the condition is reached then the program Branches sequentially to the next path of instructions. This concept allows us to use a concept called closed loop programming. This means a sensor provides information on when to switch the states of our system.

This activity is designed to introduce you to loops. The loop used here is called a Do/While loop. It is also called a Do loop or a While loop depending on the language you are using. In the example below operation B is repeated while condition A is true. When A is false then the program moves on to the next sequential step. True and false are markers for a digital signal. Sometimes these are labeled 1 and 0 representing on and off.

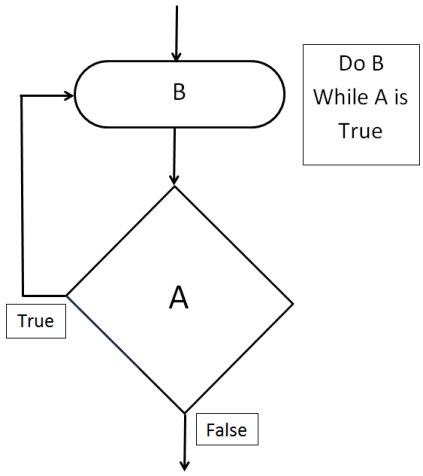

We can create a program to allow the switch to make a decision in the loop. Once we know the switch is controlling the action it is easy to change what happens by adding further elements.

At the left hand end of the toolbar, click on the new icon to create a new program.

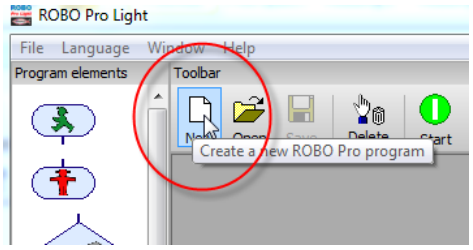

The screen will change to a white background. Now drag a Start element onto the working screen by left clicking on the start button and then moving your mouse on the screen.

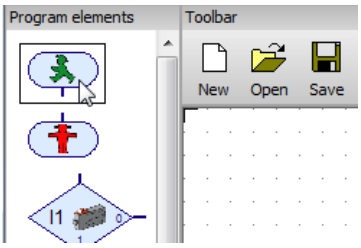

You will see the ghost of the start element as you move on the working screen.

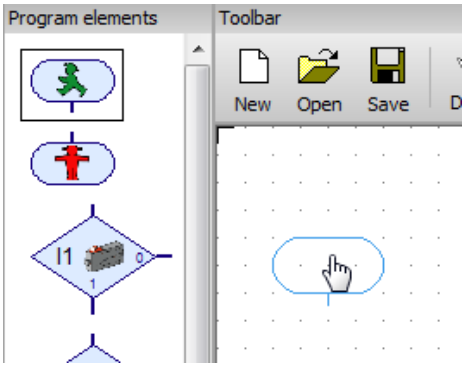

Once you have the start element where you want left click again to place it. You will see the entire icon then.

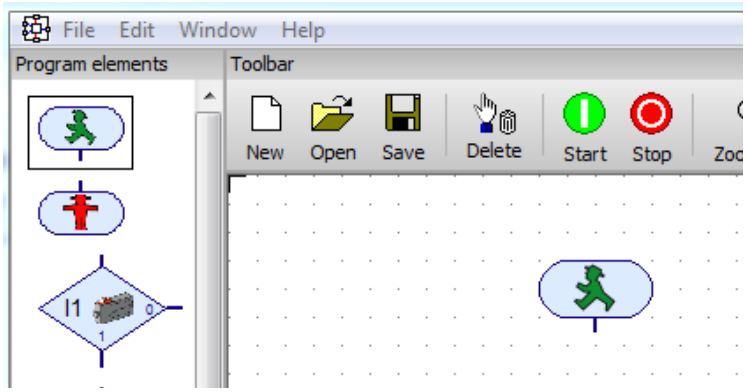

We want the program to tell us when the switch is pushed. The third icon down in the program elements is the block that looks at the switch. Left click on the switch block and place it on your screen.

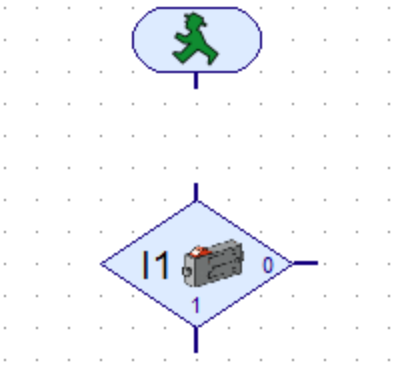

There is a 0 on the right and a 1 at the bottom of the element. If you remember when you were testing the switch you could see it change for a 0 to a 1 and back again. This element will allow us to make a decision on the state of the switch. We then use that information to select what direction the program should go. We call that branching. Just as a tree can have several branches a program can have many branches also.

We need to connect the logic blocks together. In flowcharts we use connecting lines to tie the blocks together. Begin by positioning your mouse at the bottom of the start element where the line meets the element. You will see the hand change to a hand holding a pencil.

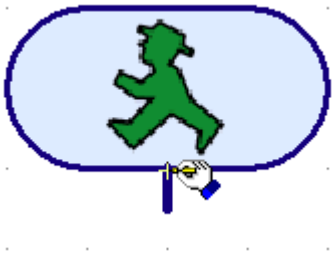

Now left click and release the mouse button. When you move off the pin you will see a line with an arrow at the end. Move your mouse to the next element. When you are on the end of the next pin left click again and it will stay connected.

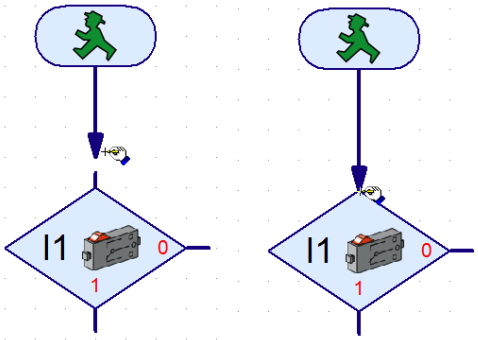

Your next step is to put screen for text on your screen. The text screen is close to the bottom of the elements. Left click on the screen and move it to the working screen.

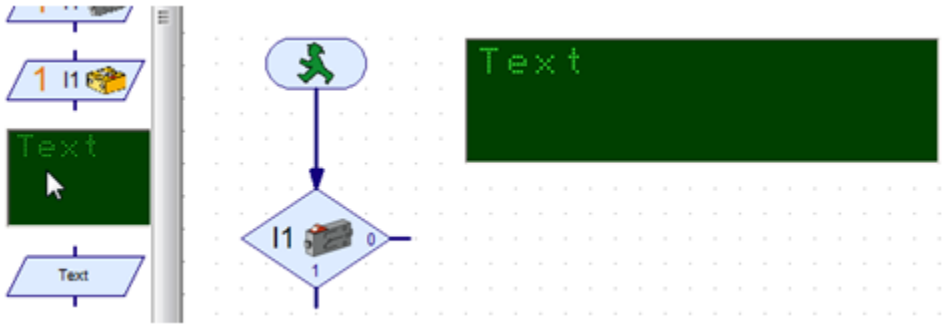

Our next element will allow us to put text up on the screen when we want. Look for the text output element.

This element is directly under the text screen. Left click on the element and place it on the screen

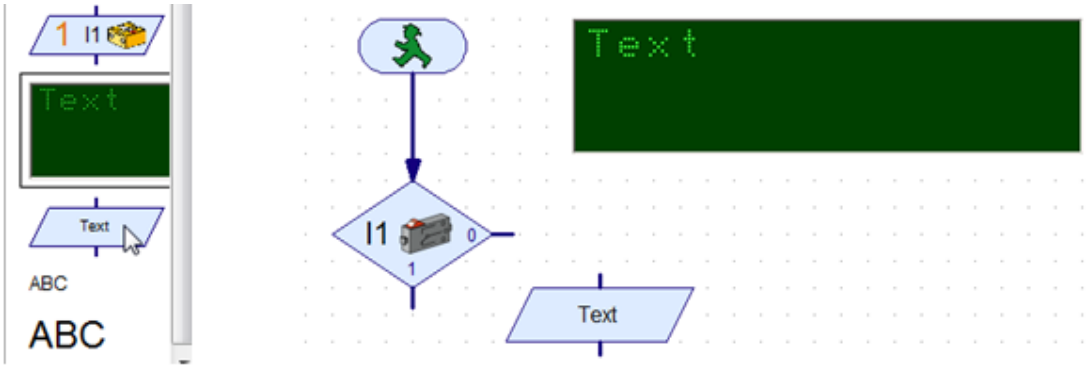

Move your mouse over the text output element. You will see your hand, which normally would allow you to move an element. This time right click and you will get a dialog box. You will see the word Text in the box. Delete the word and type in “Open Switch”

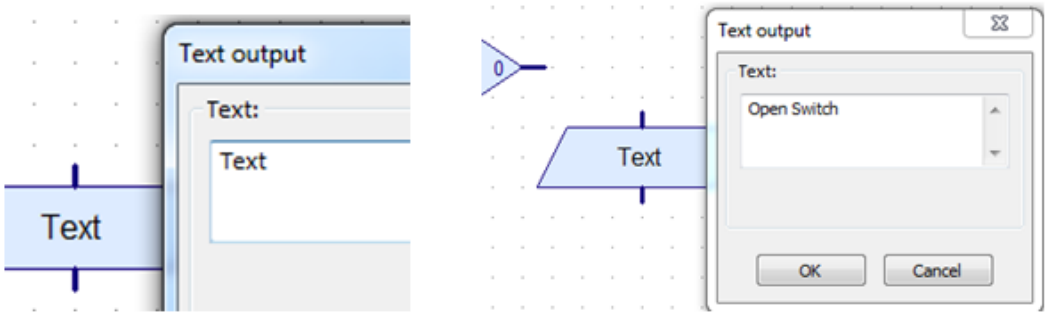

When we say a switch is open that means it is in the OFF position. Click the OK button and then join the two elements with a connecting line. When you want the wire to make

a turn click on the screen and then when you go down the wire will take a turn where you want. Notice the text output element now says Open Switch.

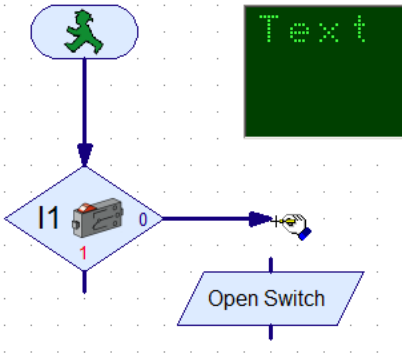

Do the same thing again but this time name the text output element Closed Switch. A closed switch is what you call a switch when it is ON.

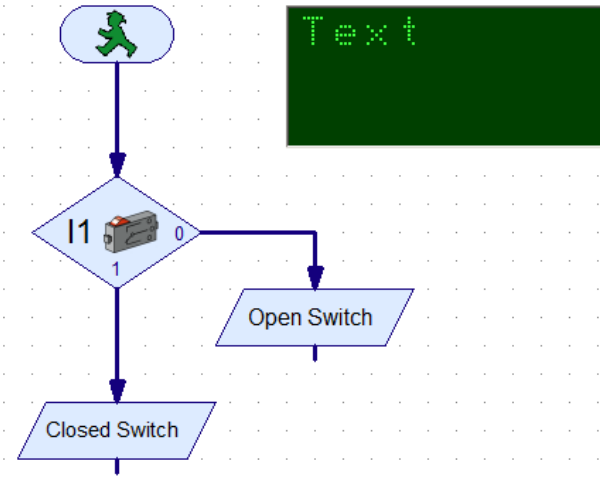

Finish wiring the programming following the picture below. Wire from the Closed Switch text output element to the wire leading from the start. This is shown on the left. Then wire from the Open Switch text output element to the turn in the wire.

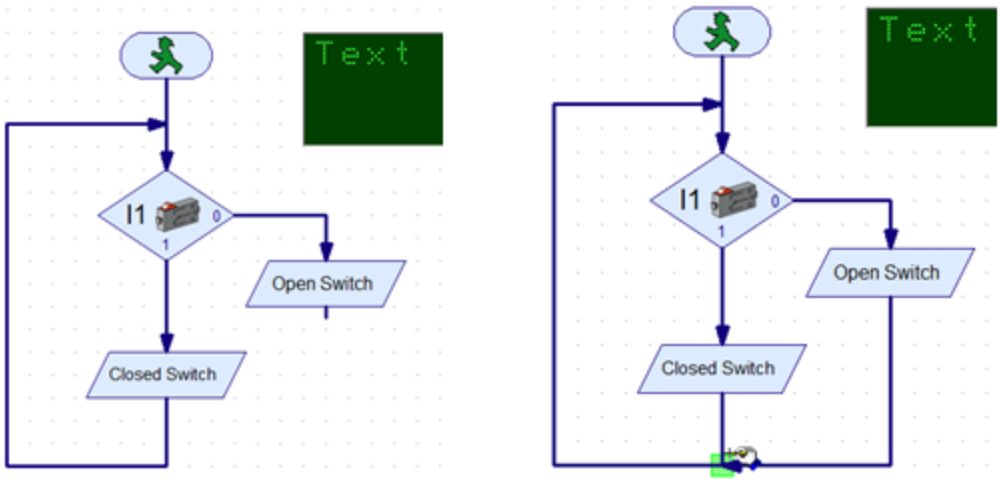

Now we can see what this program does. What do you think it will do? Talk with your partner and see if you can predict what will happen. Before running your program you should save it. Select the Save icon from the toolbar and save the file where your teacher tells you to. Have your teacher check the program and then connect the BT Smart Controller.

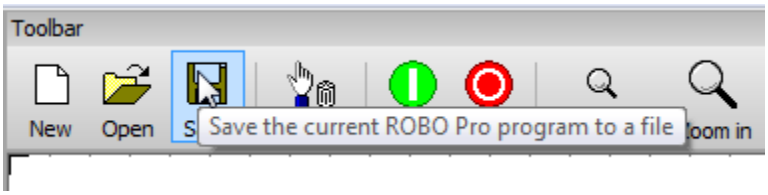

At the top of the screen on the toolbar look for the Start button. Notice the Stop button is right next to it.

Click the start button.

Does the text display window display what you predicted?

Click the stop button.

Sometimes we don't want the response to be so fast. Delete the wires from the text output elements. You do this by hovering over the wire and left clicking. The wire will turn red. Then click the delete button on the toolbar. The wire will go away.

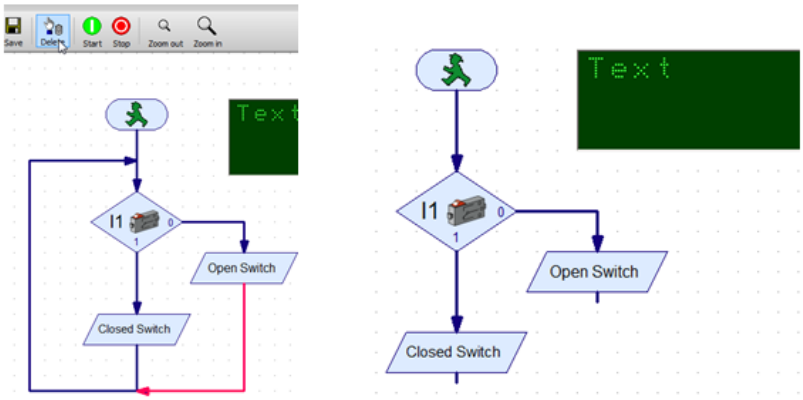

We want our program to wait a while so we add a wait element. The wait element looks like an hour glass. This time when you try to place the wait block bring it close to the text output element. You will see the ghost of a wire appear. If you left click to place the element it will automatically wire itself. Right click on the element and change the time to three seconds.

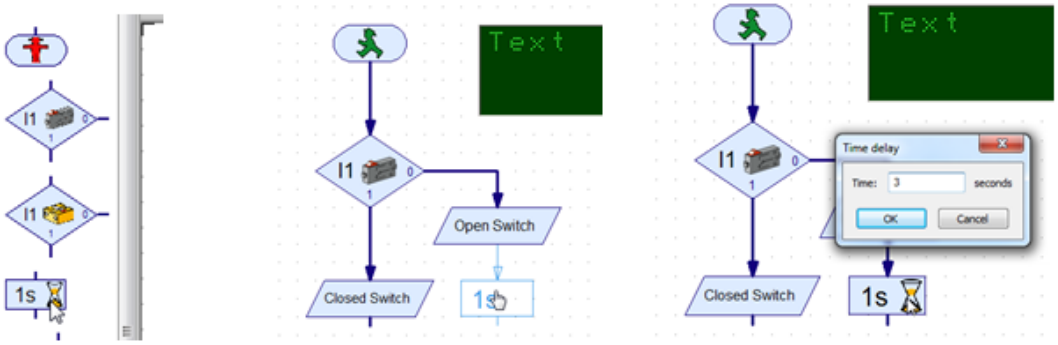

Repeat the process and place a wait element on the close switch side also. Set that one to also wait three seconds. Finish wiring the elements similar to the picture below.

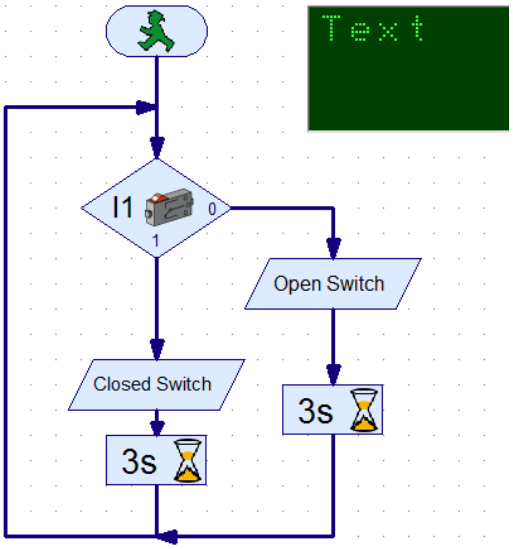

Discuss with your partner what you think will happen. Have your teacher check your program and wiring. When you have the OK, select the start button from the tool bar. Discuss what you see with your partner. Why does it take longer to change? Notice how the red box moves from element to element. Select the stop button to end running the program.

Back to Lesson
Back to the Activity List

Adding the Motor

The development of the electric motor has provided us with a great method of doing work. The fischertechnik motor is really a plastic case surrounding a permanent magnet DC motor.

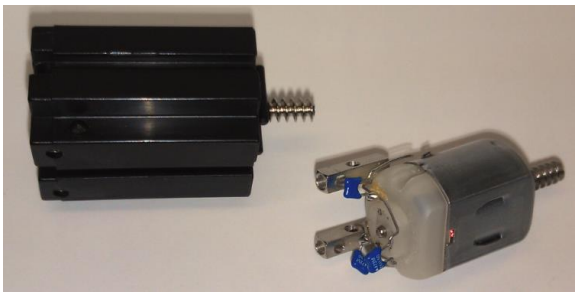

The motor itself consists of two permanent magnets in a case which establishes a magnetic field between them.

Inside the magnetic field we place a shaft wound with wire that is free to Rotate. This shaft is called an armature. Current passing through the wire of the armature causes a creation of a magnetic field. The wire is wound around a series of segmented plates to concentrate the magnetic fields.

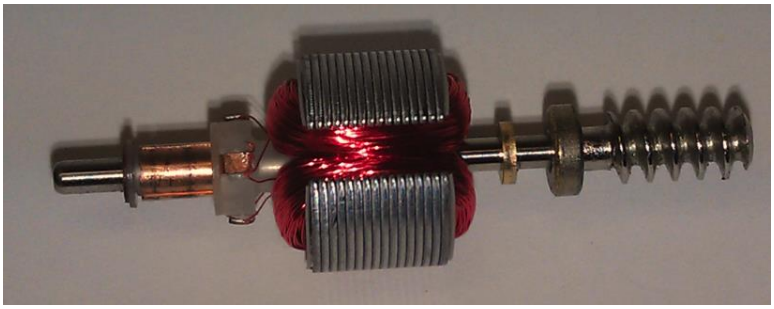

The current passes through brushes which are the two pieces in the red circle on the left in the picture below. These brushes contact the commutators on the armature allowing the armature to rotate in the magnetic field. The commutators are circled in red on the picture on the right. There are several commutators.

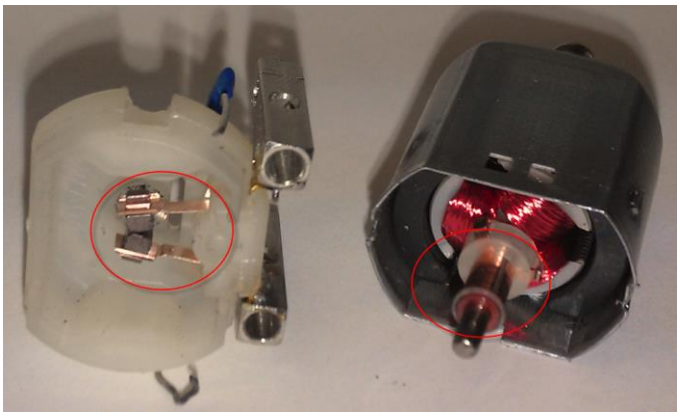

Motors come in all sizes. But they all work by spinning magnetic fields. Those spinning magnetic fields push against the fields created by the magnets. Like poles repel. This starts the motor spinning. As the motor turns a different set of commutators connect to the brushes and the field in the armature changes so a new set magnetic fields is repelling. This keeps the motor going.

When drawing a schematic we represent the motor with a symbol similar to the one below.

Connected to a power source with a switch it would look like the picture below.

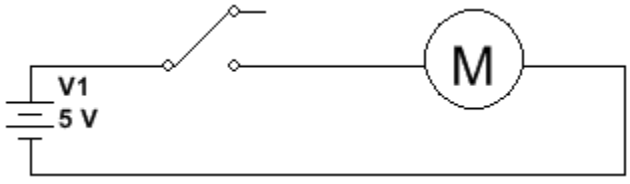

The next step is to add the motor control to a program you have already built. . When the switch is in the open position we want the motor to be off. When we have the switch in the closed position we want the motor to run for a while. Drag components around so you have some extra room. You can move elements by left clicking on them and then after they are highlighted in red left click and hold the button down to drag them with the mouse.

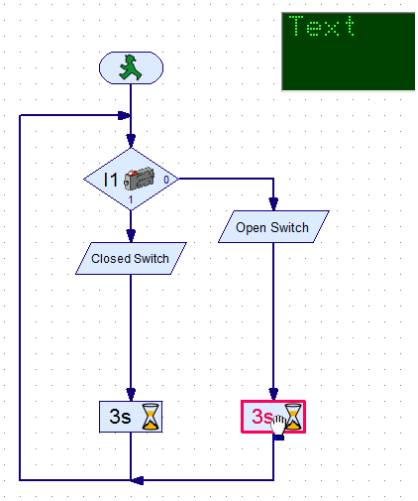

Delete the connecting lines from the text output elements. Drag out Output M1 onto the working screen. Repeat the process so we have 2 outputs on the screen.

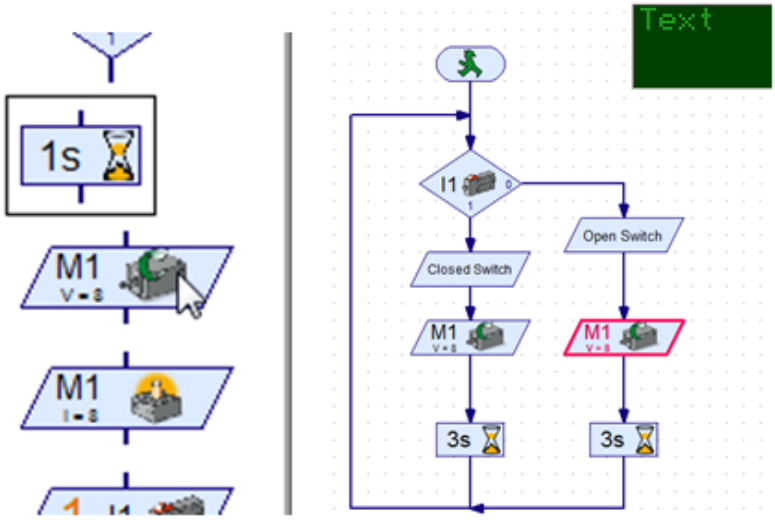

Finish wiring them into your program. Now right click on the Output M1 under the Open Switch text output element. This brings up the Motor Output dialog box. Click on the STOP button and then click OK.

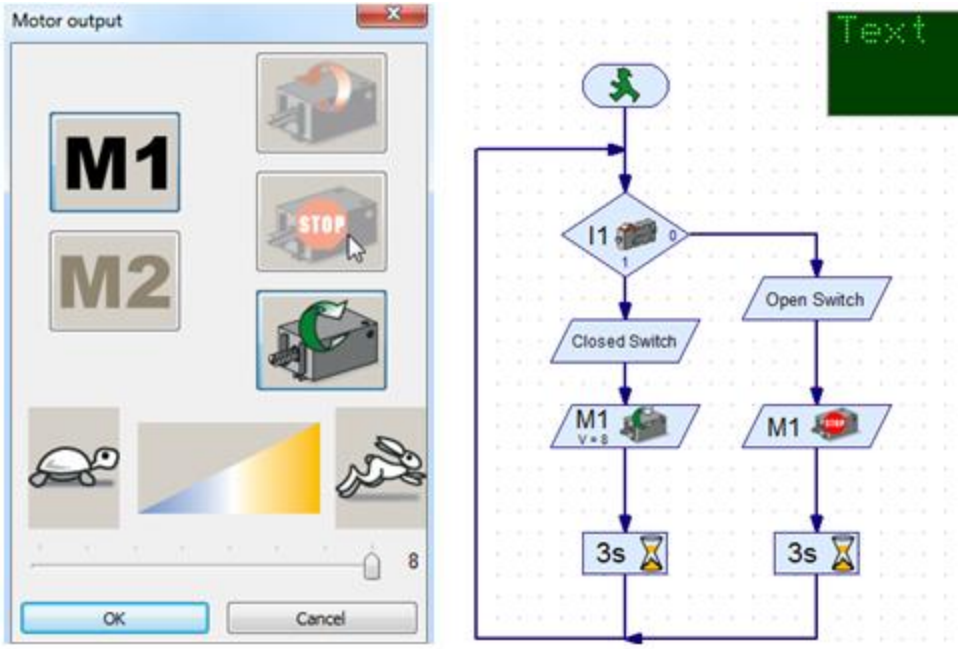

Discuss with your partner what you think will happen. Have your teacher check your program and wiring. When you have the OK, select the start button from the tool bar. Discuss what you see with your partner. When does the motor turn on? If you release the switch how long does it take to stop the motor? Notice how the red box moves from element to element. Select the stop button to end running the program.

Go back to the Output M1 under the Open Switch text output element. Change it from a STOP to a Counterclockwise rotation by right clicking on it and selecting the motor with the red arrow.

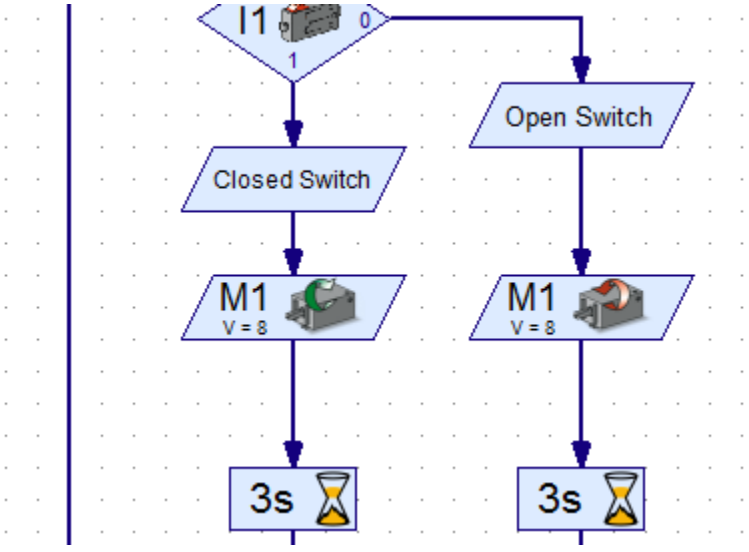

Discuss with your partner what you think will happen. Have your teacher check your program and wiring. When you have the OK, select the start button from the tool bar.

Discuss what you see with your partner. What happens when the switch moves the program from the open switch loop to the closed switch loop? When the time runs out what happens? Select the stop button to end running the program.

Back to Lesson
Back to the Activity List

Sensors: Digital Phototransistor

Purpose:

Digital inputs are those transducers that provide an output that is one of two states: high or low, open or closed, Logic 1 or Logic 0. Digital inputs are the easiest to deal with in programming. A phototransistor is a bipolar transistor in a transparent case. Light can enter the case and when it strikes the base-collector junction it causes electrons to be generated by the photons in the light. This will cause the phototransistor to conduct. Think of the phototransistor as a fast acting semiconductor switch. If strong light strikes the device it conducts. If the light is interrupted the device will not conduct.

Equipment:

BT Smart Controller
Wires
Phototransistor
Lamps (2)

Procedure:

Switches are installed in circuits to control the flow of electrons through the circuit. The phototransistor is setup as a fast acting semiconductor switch. Without light it is a normally open switch. When light strikes the device it begins to conduct and will continue to conduct until light is no longer there. The schematic for a phototransistor is shown below.

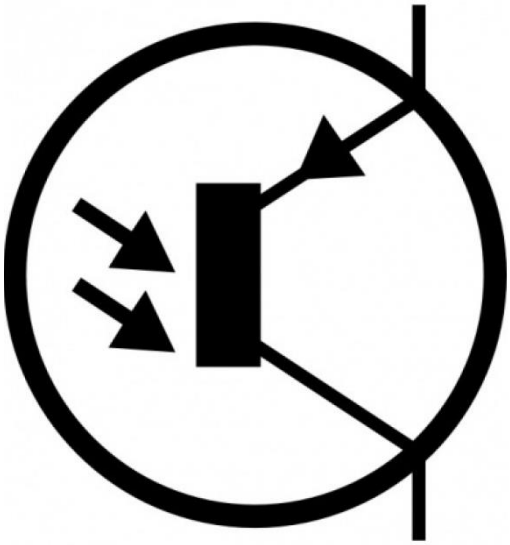

Because it is a semiconductor device polarity is critical. There is a red spot on the transistor.

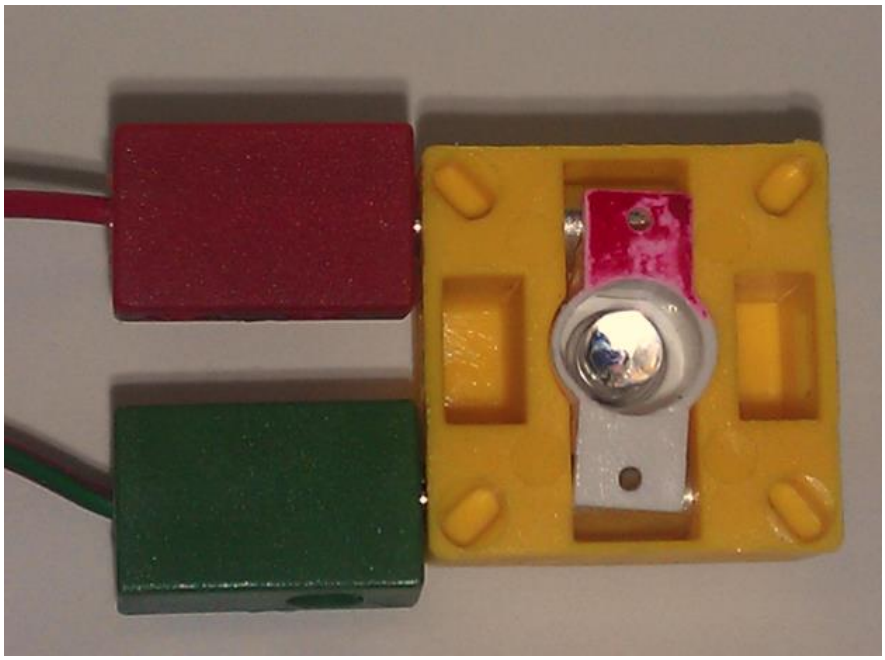

The red spot represents the collector of this transistor. This should be connected by a red wire to the positive input side of the connections on TX controller shown circled in red below. The ground or green wire should be connected to the ground terminal on BT Smart controller circled in green below.

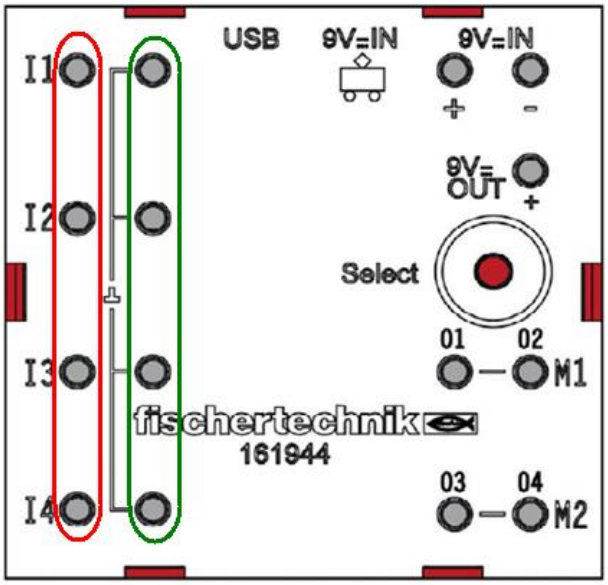

Using the Phototransistor

Take 5 building block 30 and create the setup shown in the picture below.

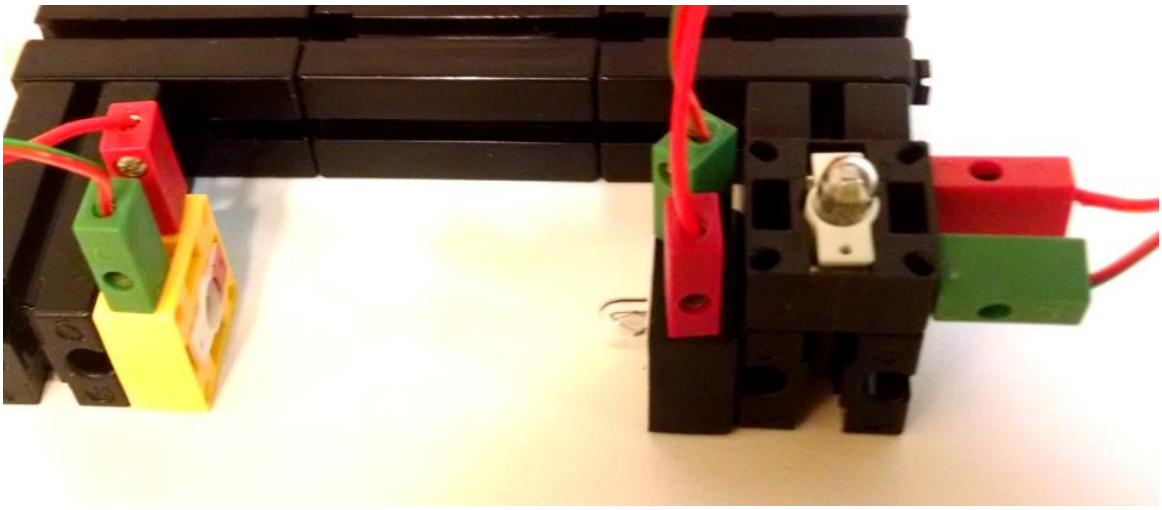

Connect the phototransistor to the BT Smart Controller using the I1 connection. Be sure you hook up the phototransistor using the correct polarity on the BT Smart Controller. Connect the lamp across from the phototransistor to M1. The lamp that is point up should be connected to M2.

Whenever you hook up a sensor to the BT Smart Controller it is a good idea to open the Interface and use controller test section of the application. Open the Robo Pro Light software. On the right hand side of the screen click on M1 on at the top of the Output M1.

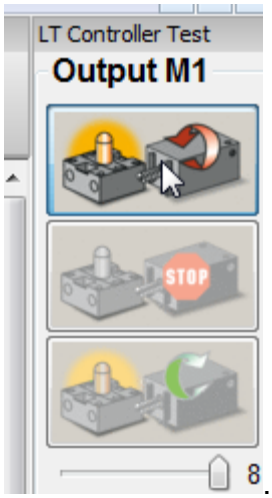

The light should turn on. Click the Stop Button. Repeat the process with the M2 motor output to be sure the lamp is wired correctly.

In the Inputs section I1 with the lamp turned off you should see a 0 for I1 input.

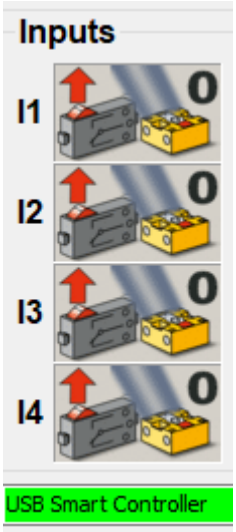

Turn M1 on and see if I1 changes from a 0 to a 1. If it does you are connected properly.

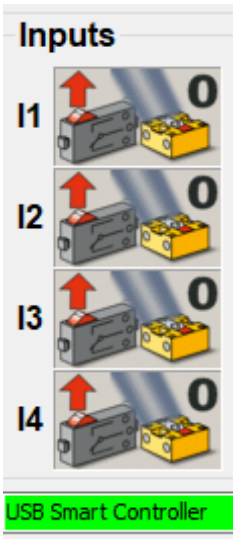

Conclusion:

Include a sketch of your setup in your Engineering notebook. Explain what happens when you shine the light on the phototransistor.

Reverse the wires on the BT Smart Controller. Does reversing the wires have any effect on the operation of the sensor?

Begin by creating a new file in Robo Pro Light

Drag one of each of the following elements to the screen.

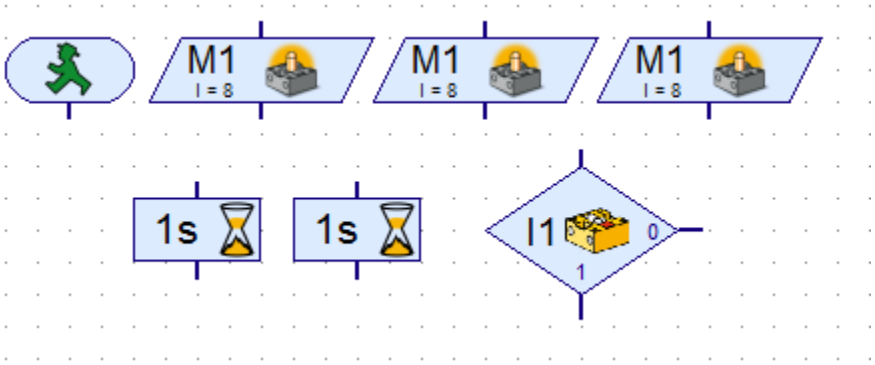

In our program we want to turn M1 on and leave it on. We want to be able to turn M2 on or off depending on the state of the phototransistor. To accomplish this right click on one of the motor elements you placed on the screen. Click on M2 and say ok.

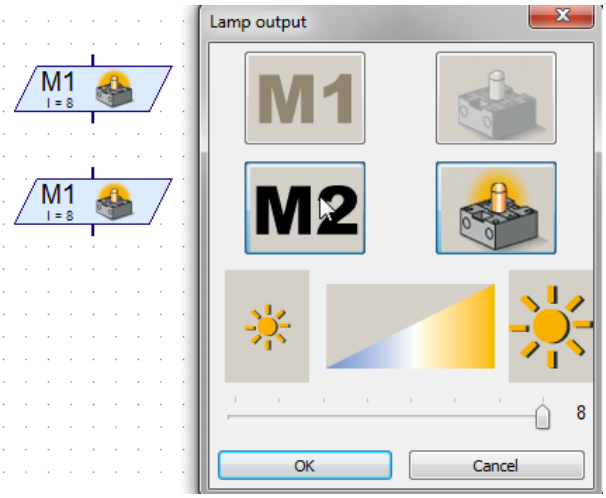

Repeat the process with the next block and this time set it to M2 and Off.

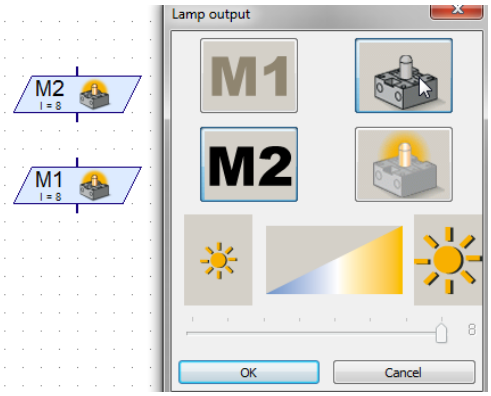

Setup the following simple circuit to test out your sensor:

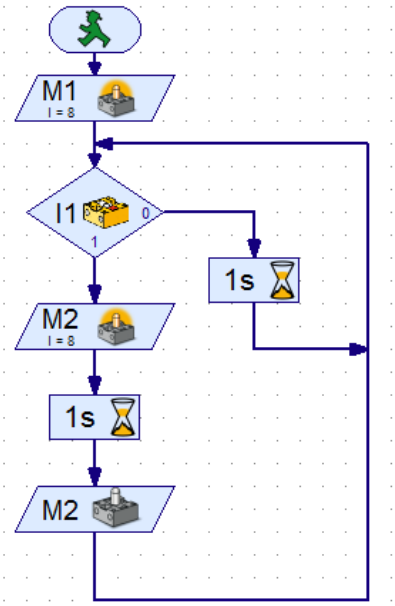

Obtain your instructors permission and then connect the controller to the computer. Turn on the power to the controller and run the program. What happens when you break the light beam to the phototransistor with your finger?

Stop the program. Right click on the branch element. This will bring up the phototransistor element dialog box. Click on the lower symbol to make a 0 move down and the 1 to move to the right. Say ok

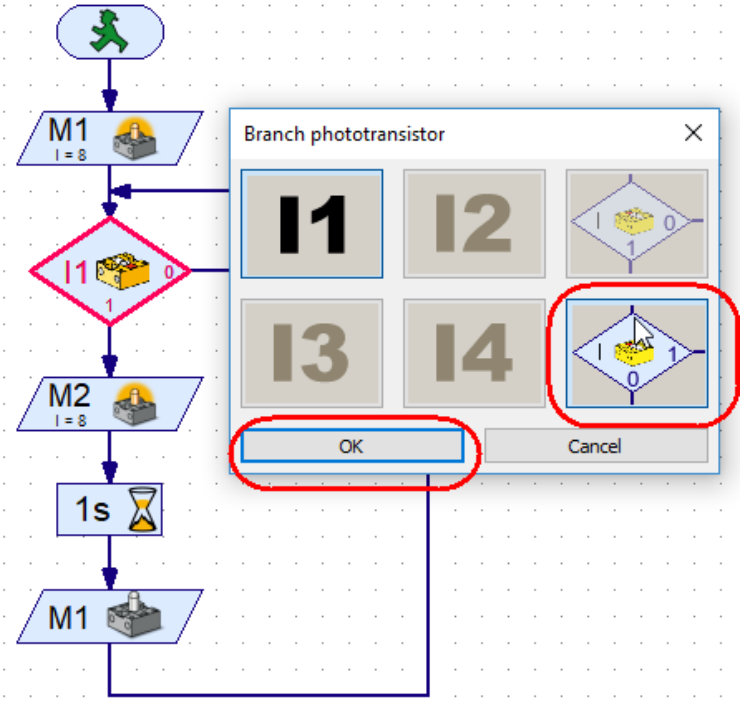

Run the program again. Observe the behavior of the system. Record you observations in your engineering notebook.
Print a copy of the program for your engineering notebook. Write an observation about what the effect of bringing the light over the phototransistor. Describe the operation of the circuit.

End the program by using the stop icon from the main toolbar. Turn the controller off.

Back to Lesson
Back to the Activity List

Engineering Documents

This section contains documentation to help students manage their projects. This allows students to take control and embeds technical literacy into the projects.

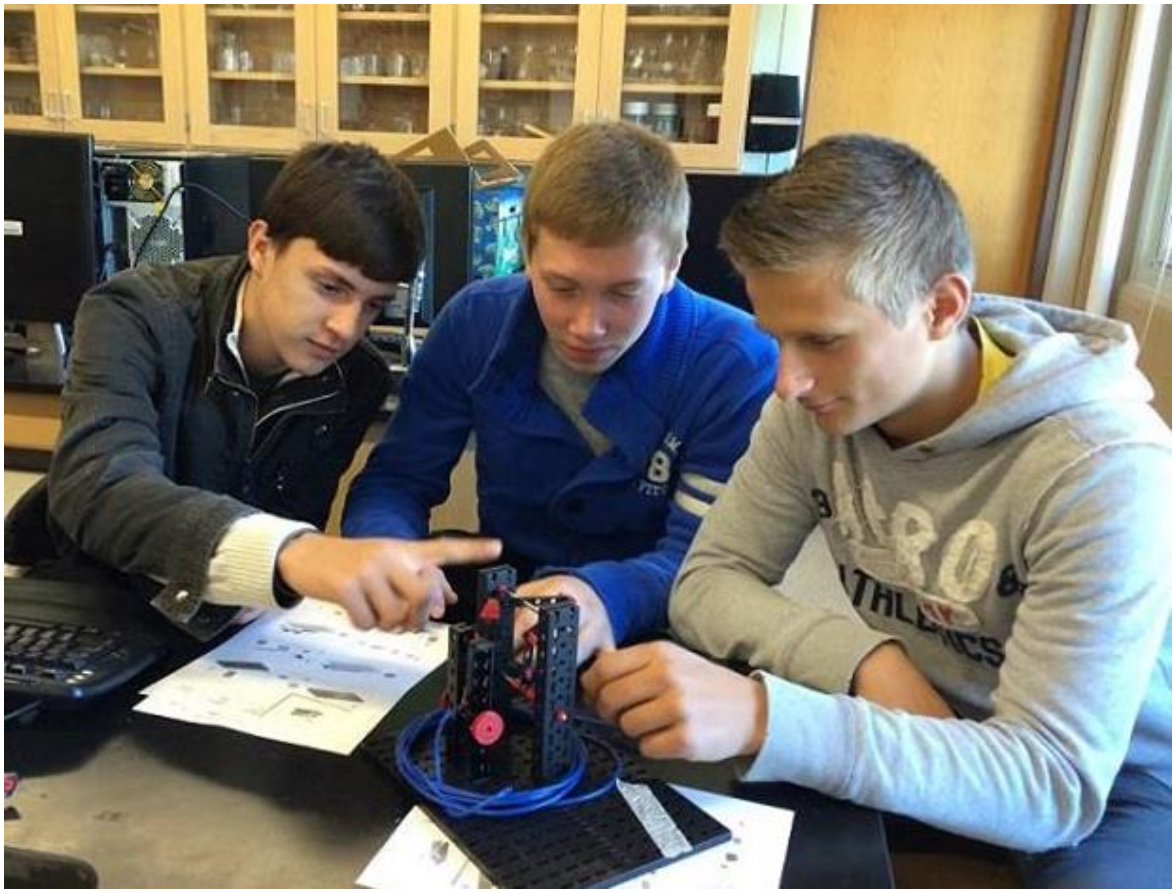

The Engineering Notebook
Design Process
Design Documentation
Problem Statement
Design Brief
Testing Protocol
Engineering Report

Back

The Engineering Notebook

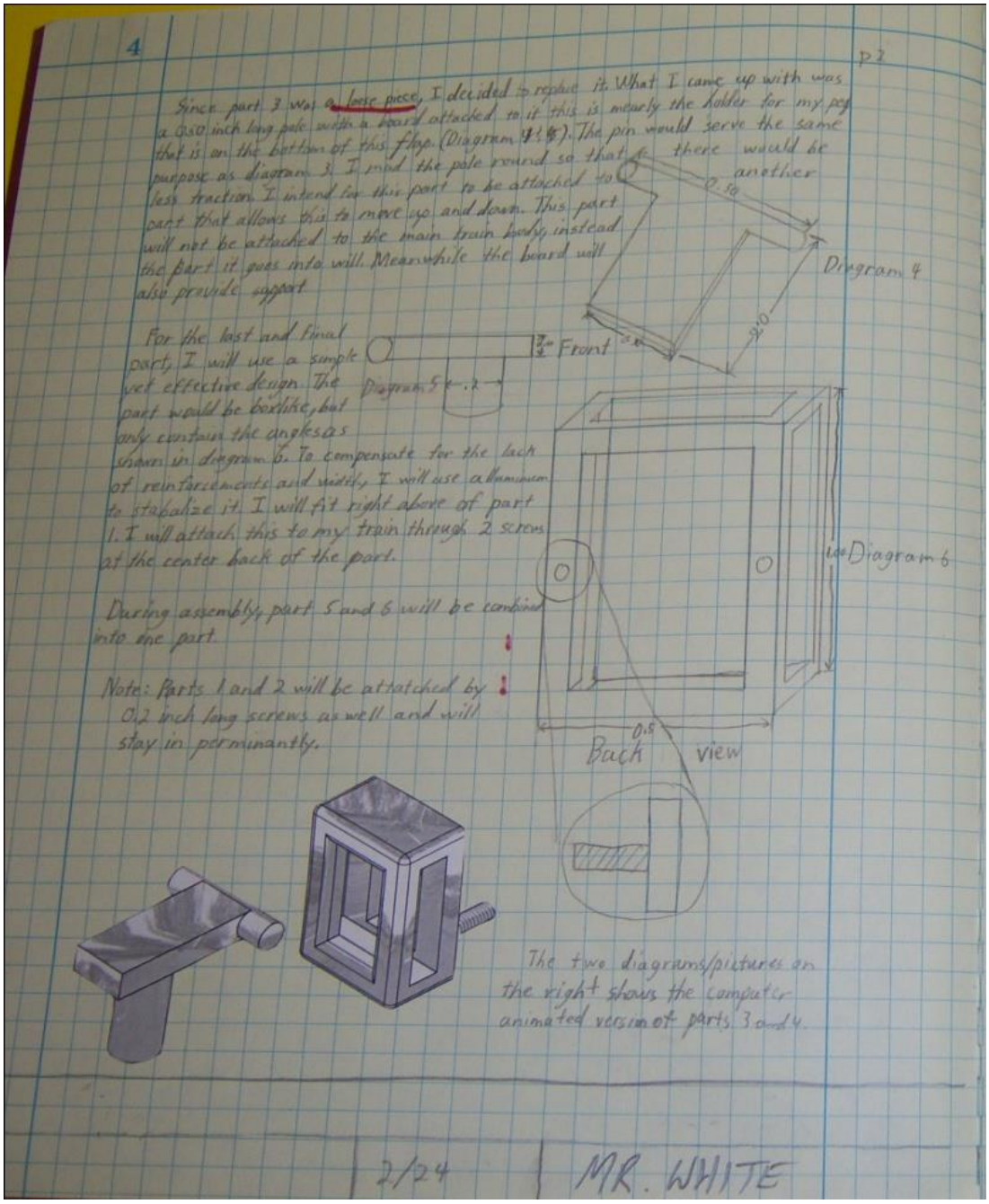

An engineering notebook is known by several names depending on the person and industry it is being used in. It is a bound book that contains the time-sequential written documentation of the development of the ideas of its author, along with all notes, data,

observations, calculations, and other information relevant to the discovery or experiment being conducted. It provides an important record of the progress of an engineer, scientist’s or inventor's work. When properly maintained, it may be submitted as a legal document for patent purposes or legal records.

It is the equivalent of a technical diary and has multiple uses. It presents the authors thought process and work in an easy to access manner, allowing an author to confirm conclusions, details, or dates.

Engineering research and development organizations usually require their engineers to keep a running record of their activities. In the event that a project is shelved or the person leaves employment it can provide others working on a project the paths of inquiry that have been investigated, and can offer justification for decisions or courses of action taken.

Use a bound notebook with a stitched binding. Do not use a loose leaf or Spiral bound notebook.

All entries should be in ink not pencil.

The title, project number, and book number should be accurately recorded when starting a new Page.

All data is to be recorded directly into the notebook. Elaboration of details is preferable. Notes and calculations should be recorded in the notebook. In the case of an error, draw a single line through the incorrect data. Do not erase or use correction fluid. All corrections should be initialed and dated. When making a correction, make a notation of the page number where the correct information is found.

After entering your data, sign and date all entries. Witness or witnesses should sign and date each entry. The witness must observe the work that is done, and have sufficient knowledge to understand what they have read. Names of all who were present during any demonstration, phone conversation or discussion should also be recorded.

Never leave any White Space: "X" out or Crosshatch all unused space, and don't forget to initial and date the entry. Use both sides of the page.

When the notebook is full, begin a new notebook with the title, project number, and book number. Also make a notation of the preceding notebook number. Archive the full notebook in a safe location.

If necessary, items may be taped into the notebook with a handwritten date and title. Permanently attach inserted items (glue is preferred). Sign across the edge of the inserted sheet with half of the signature on the page.

Following this procedure can help students. It will foster improved documentation, research and sketching skills. It can help with time management skills and provide a convenient method for class closure. Early adoption will help with the project reports they will asked to accomplish.

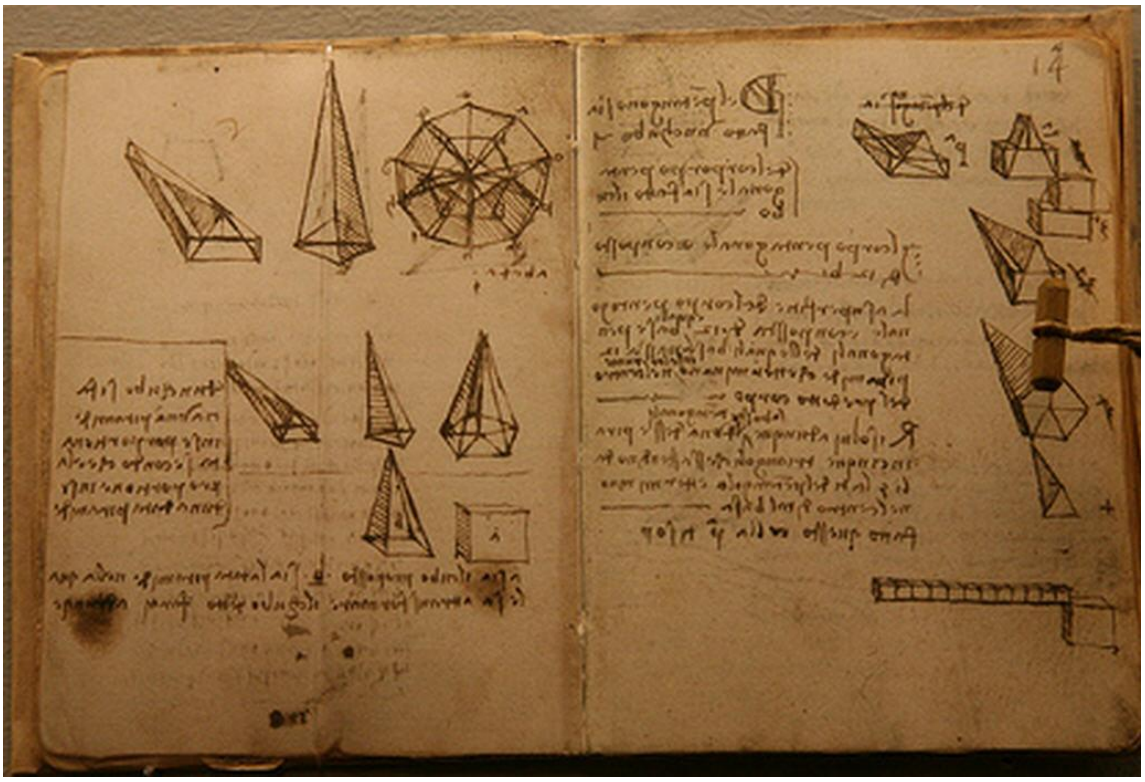

The pages above come from an engineering notebook kept by Leonardo da Vinci. It is a bound notebook containing sketches and explanations.

An example can be found at http://web.mit.edu/me-ugoffice/communication/labnotebooks.pdf.

Back to the Engineering Documents
Back to Sketching and Documentation
Back to Simple Machines
Back to Mechanical Systems
Back To Structures
Back to Conversion and Storage of Energy
Back to Electricity
Back to Electronics
Back to Optics
Back to Digital Communications
Back to Programming Control Systems

Design Process

The engineering design process is a series of steps that engineers follow when solving problems. There are many variations of the design process in use and every situation or problem will have different elements that you should investigate. The steps listed below as well as the bullets included should inform your process but not dictate this process for every situation.

Design Process

Conduct preliminary research

- Research background information and identify vocabulary.
- Identify criteria and constraints for the problem
- Define limits of the problem to be solved
- Refine the problem statement in the context of criteria and constraints
- Define areas of research needed to solve the problem
- Independent research
- Enabling activities
- Lab activities

Create the project management plan

- Overview
- Scope
- Schedule
- Budget
- Communication
- Closure

Create a design brief

- Objectives and goals of the design
- Client and Context
- Scope of the project
- Problem Statement or Description
- Resources and Budget
- Constraints
- Time needed

Brainstorm possible solutions

- Generation of ideas
- Preliminary sketches

Design testing methods and protocol for critical assumptions

- Introduction
- Test Strategy
- Data Collection Plan; Sampling Plan
- Definition of a Successful Test, Pass / Fail Criteria
- Test Conditions, Setup Instructions
- Logistics and Documentation:
- Analysis of Data
- Conclusion

Create optimization matrix for decision making and select solution

- Design matrix
- Identify key criteria
- Assign value to each
- Rate possible solutions

Develop, refine and document selected solution

- Creation of design documentation
- Identify new issues

Create a prototype

- Turning the plans into a prototype

Test and acquire data

- Design testing to evaluate the prototype
- Acquire testing data

Analyze test data

- Creation of graphs and charts
- Statistical examination of data

Refine and iterate the design

- Apply the changes suggested by the analysis of the test data

Finalize documentation of design

- Application of the results of the test data
- Propose design changes
- Retesting of the prototype
- Repeat

Prepare communication plan for authentic audience

- Research audience
- Plan for explanations and graphics
- Plan for feedback

Prepare reports, design documentation, design proposals and/or presentations for the authentic audience

Present/defend to an authentic audience with feedback

Back to the Engineering Documents
Back to Sketching and Documentation
Back to Simple Machines
Back to Mechanical Systems
Back To Structures
Back to Conversion and Storage of Energy
Back to Electricity
Back to Electronics
Back to Optics
Back to Digital Communications
Back to Programming Control Systems

Design Documentation

Design documentation is the collection of communications about the final design requirements and specifications that illustrate and thoroughly describe a designed product. Writing effective design documentation (like design itself) is really all about making sure you serve the needs of your audience.

- A design isn't "read" it is "used"
- The design process goes from least specific to most specific
- Never write a paragraph when a bullet point will do
- A bullet point should always be used instead of paragraph
- Use Diagrams
- A good table replaces even more paragraphs
- Never use adjectives. That is the function of sales people and project managers
- Use appendixes for irrelevant information that you think is relevant

Items that fall under the umbrella of documents prepared to communicate a design might include:

- 3D CAD Design
- Analysis
    - FEA
    - stress
    - load distribution
    - fluid flow
    - heat transfer
- Conceptual Designs
- Flowcharts
- Instructions,
- Linkage Diagrams
- Reference Guides
- Sketches
- Specifications,
- Tutorials,
- Working Drawings
- Prototypes
    - Black Box Prototype: An existing enclosure or box with mechanical, electrical, optical and or software internals fully functioning.
    - Concept Model: formally describing some aspects of the physical and social world around us for the purposes of understanding and communication

- Evolutionary Prototyping (also known as breadboard prototyping) a very robust prototype in a structured manner with the ability to constantly refine it.
- Feasibility Prototype: Determine feasibility of various solutions
- Functional Storyboarding: Determine useable sequences for presenting information
- Horizontal Prototype: Demonstrates outer layer of human interface only, such as windows, menus, and screens
- Mathematical Prototype: algorithm development for analysis operations
- Mock up: A rough construction using crude materials such as cardboard, foam, paper or wood typically done to show the idea in 3D form.
- Model: A form built and painted for aesthetic appearance only
- Presentation Prototype: representation of the product as it will be manufactured. Often used for promotional purposes.
- Proof of Concept: The use of existing materials, parts and components to prove the new Idea works or not.
- Rapid Prototype: A group of techniques used to quickly fabricate a scale model of a part or assembly using three dimensional CAD data. Frequently associated with 3D printing.
- Usability prototypes used to define, refine, and demonstrate user interface design usability, accessibility, look and feel.
- Vertical Prototype: Refine database design, test key components early
- Virtual Prototype: 3D Computer Aided Design (CAD) rendering
- Working Prototype: A fully functioning item yet may not be fully designed & engineered for manufacturability, nor it may not be appearance like.

Back to the Engineering Documents
Back to Sketching and Documentation
Back to Simple Machines
Back to Mechanical Systems
Back To Structures
Back to Conversion and Storage of Energy
Back to Electricity
Back to Electronics
Back to Optics
Back to Digital Communications
Back to Programming Control Systems

Problem Statement

The problem statement is the statement that the students develop from their preliminary research and is their definition, or redefinition, of the problem as they understand it. It is a clear and concise description of the issues that need to be addressed by the team.

The problem statement becomes part of the Design Brief and consists of several parts in a few sentences. It includes –

- The vision statement: This statement describes the goals, values or the desired results that solving the issue will have.
- The issue statement: This statement is a sentence or two that describes the problem or what is preventing the vision from being accomplished using specific issues. This would consist of the “Who, What, When, Where, and Why” of what is getting in the way of solving the issue.
- The method statement: This describes the approach the team will take to solve the problem.

Example

Bicycles are an efficient and low pollution method of transportation in overcrowded urban areas that frequently move faster than motorized transportation. Secure storage, passenger safety and inclement weather all impact the desirability of adopting this mode of transportation. We are proposing to design an enclosed hybrid pedal powered vehicle that will allow use in all weather, provide greater passenger safety and have the same ability to be secured as a car while taking up a fraction of the space.

Back to the Engineering Documents
Back to Sketching and Documentation
Back to Simple Machines
Back to Mechanical Systems
Back To Structures
Back to Conversion and Storage of Energy
Back to Electricity
Back to Electronics
Back to Optics
Back to Digital Communications
Back to Programming Control Systems

Design Brief

A design brief is used to provide a summary of how a problem will be approached. This way the customer will know the exact problem you will be solving for them and a projection of the resources needed. This is usually a one to two page document meant to quickly communicate the scope and goals of a specific design project. The document is focused on the desired results of design. It is frequently done in conjunction with the client.

Design briefs should have most of the following sections.

- Objectives and goals of the design
- Client and Context
- Scope of the project
- Problem Statement or Description
- Resources and Budget
- Constraints
- Time needed

Back to the Engineering Documents
Back to Sketching and Documentation
Back to Simple Machines
Back to Mechanical Systems
Back To Structures
Back to Conversion and Storage of Energy
Back to Electricity
Back to Electronics
Back to Optics
Back to Digital Communications
Back to Programming Control Systems

TESTING PROTOCOL

Introduction: what is the project about and what are the critical parts that need testing?

Test Strategy: How are you going to test the part or component and under what conditions?

Data Collection Plan; Sampling Plan: How are you going to collect the information? Will this be a random sample of a run? One time testing of a craft build prototype?

Measurement Capability, Equipment: What are we measuring and how accurate do we have to be? What kind of testing equipment will we need?

Definition of a Successful Test, Pass / Fail Criteria: This is a description of what constitutes success. For example, not breaking after 100 repetitions or being within measurement tolerances etc.

Test Conditions, Setup Instructions: How will you set up the test? If someone else has to duplicate your testing are there instructions they have to follow?

Logistics and Documentation: This is a description of what was tested and how.

Analysis of Data – Design Summary: What happened during testing?

Conclusion or Design Summary: what did the testing tell you?

Back to the Engineering Documents
Back to Sketching and Documentation
Back to Simple Machines
Back to Mechanical Systems
Back To Structures
Back to Conversion and Storage of Energy
Back to Electricity
Back to Electronics
Back to Optics
Back to Digital Communications
Back to Programming Control Systems

Engineering Report

Good report organization should promote readability and reflect the scientific method of attack, which proceeds with objective, method, results, and conclusions. It is logical to report a project in the sequence in which it is done, and many engineering reports are organized on this basis. Two improvements to the logical sequence are the addition of an abstract or executive summary and the insertion of headlines. These two features facilitate “scanning” of the report. Thus, a busy executive or engineer may quickly assess the major findings and conclusions of the report, and then easily find further details as required.

Sections that should be included:

- Title Page. Identify the group members, project, dates and timeframe.
- Summary or Abstract (Executive Summary)
- Nomenclature. Students need to list and define all science and engineering terms and measurements used in the report.
- Introduction. This should include the entire project description.
- Theory and Analysis
- Experimental Procedures
- Results and Discussion
- Conclusions and Recommendations
- Acknowledgments
- Literature Cited
- Appendix

Back to the Engineering Documents
Back to Sketching and Documentation
Back to Simple Machines
Back to Mechanical Systems
Back To Structures
Back to Conversion and Storage of Energy
Back to Electricity
Back to Electronics
Back to Optics
Back to Digital Communications
Back to Programming Control Systems

Assessment Rubrics

Assessment comes in both formative and summative. It is an integral part of quality instruction. During the course of the projects one of the teacher's main functions is to work with student groups, keeping track of progress and providing formative assessment in the form of feedback and promoting reflection on the part of students. The focus should be on lifetime and 21st century skills. The goal of instruction is to promote abilities in research, problem solving, design, experimenting, testing and collecting data.

Rubrics are used in the assessment process to communicate expectations of quality of a task. Rubrics should be shared with students at the beginning of a project so they can clarify any misconceptions before beginning work. They can then build the skills and gather knowledge to solve the problem presented to the expectations of excellence described.

General Rubrics for Literacy tasks

- Argumentative or Persuasive
- Informational or Explanatory

Individual Project Rubrics

- Sketching and Documentation Rubric
- Simple Machines Rubric
- Mechanical Systems Rubric
- Structures Rubric
- Conversion and Storage of Energy Rubric
- Electricity Rubric
- Electronics Rubric
- Optics Rubric
- Digital Communications Rubric
- Programming Rubric

Back

Literacy Rubric for Argumentative or Persuasive Project

	Not Yet	Getting There	Meets Expectations	Exceeds Expectations
	1	2	3	4
Focus	An attempt to answer the problem, but the response lacks focus.	Answers the problem and states a position but the focus is varying or weak.	Fully answers the problem keeping a clear focus. Argument is generally convincing.	Fully answers the problem keeping a very clear focus and strong, convincing argument.
Main Idea	Attempts to create a main idea but lacks focus and clarity. No mention of argument other than their own.	Creates an argument and makes note of claims of other than their own.	Creates a convincing argument; develops and presents argument and counter argument fairly.	Creates a convincing and meaningful argument; develops and presents argument and counter arguments fairly and fully.
Reading & Research	Tries to present information but does not connect it to the problem.	Presents information from research that addresses the problem with only small errors.	Presents accurate and relevant information from research that helps develop their argument	Effectively presents accurate and relevant information from research that develops a strong argument.
Development	Tries to give details but they are poorly written or do not apply to the problem. They make no claim, or make an irrelevant claim	Gives details to support their main idea with only minor weaknesses in reasoning. Makes a weak claim.	Gives details that fully support the main idea and answer the problem. Gives an example that helps clarify the claim.	Gives thorough details that fully support the main idea and strongly answer the problem. Makes strong connections to their argument that clarifies and helps the reader understand the claim.

Organization	Tries to organize ideas but lacks structure.	Organizes ideas to fulfill requirements, with some gaps in structure.	Organizes response to meet all requirements of the problem. Organization reveals the reasoning behind the claim.	Organizes response in a way that enhances the information given in response to the problem. Organization reveals the reasoning behind the argument and creates more support for it.
Conventions of English	Writes response with many errors in grammar, usage and writing mechanics. Sources of research are not cited.	Is inconsistent with grammar, usage, and mechanics; uses tone and language inappropriate to audience or topic. Only some sources are cited.	Work has very few errors in grammar, usage, and mechanics; tone and language are appropriate to the project and audience. Few errors in citation formatting.	Demonstrates a full command of the conventions of English; tone and language enhance the response. Consistently and correctly cites sources.
Understanding of Content	Tries to show understanding of content but knowledge is weak or incorrect.	Connects basic knowledge of content to problem, shows minor errors in understanding.	Presents full factual understanding of content as it applies to the project.	Presents in-depth understanding of content that applies to, and enhances, the response to the project.

Back to Sketching and Documentation
Back to Simple Machines
Back to Mechanical Systems
Back To Structures
Back to Conversion and Storage of Energy
Back to Electricity
Back to Electronics
Back to Optics
Back to Digital Communications
Back to Programming Control Systems

Literacy Rubric for Informational or Explanatory Project

	Not Yet	Getting There	Meets Expectations	Exceeds Expectations
	1	2	3	4
Focus	An attempt to answer the problem, but response lacks focus.	Answers the problem but the focus is varied or distracted.	Fully answers the problem keeping a clear focus.	Fully answers the problem keeping a very well developed and clear focus.
Main Idea	Attempts to create a main idea but lacks focus and clarity.	Creates a basic main idea with general purpose.	Creates a main idea with a clear purpose that is carried though the piece.	Creates a strong main idea with a clear purpose that guides the response throughout the piece.
Reading & Research	Tries to present information but does not connect it to the problem. Does not evaluate the integrity of sources.	Presents information from research that addresses the problem with only small errors Starts to evaluate the integrity of sources.	Presents detailed information from research that helps answer the problem. Evaluates the integrity of sources.	Selectively presents detailed information that helps answer all parts of the problem. Evaluates the integrity of sources and identifies credible sources.
Development	Tries to give details but they are poorly written or do not apply to the problem. Does not address implication of project, or it is irrelevant. Does not address unanswered questions.	Gives details to support the main idea and answer the problem. Mentions implications of project or an unanswered question.	Gives details that fully support the main idea and answer the problem. Explains the implications of project and an unanswered question.	Gives thorough details that fully support the main idea and strongly answer the problem. Entirely explains the implications of project and one or more unanswered questions.
Organization	Tries to organize ideas	Organizes ideas to fulfill	Organizes response to meet	Organizes response in a way

	but lacks structure.	requirements, with some gaps in structure.	all requirements of the problem.	that enhances the information given in response to the problem.
Conventions of English	Writes response with many errors in grammar, usage and writing mechanics. Sources of research are not cited.	Is inconsistent with grammar, usage, and mechanics; uses tone and language inappropriate to audience or topic. Only some sources are cited.	Work has very few errors in grammar, usage, and mechanics; tone and language are appropriate to the project and audience. Few errors in citation formatting.	Demonstrates a full command of the conventions of English; tone and language enhance the response. Consistently and correctly cites sources.
Understanding of Content	Tries to show understanding of content but knowledge is weak or incorrect.	Connects basic knowledge of content to problem, shows minor errors in understanding.	Presents full factual understanding of content as it applies to the project.	Presents in-depth understanding of content that applies to, and enhances, the response to the project.

Back to Sketching and Documentation
Back to Simple Machines
Back to Mechanical Systems
Back To Structures
Back to Conversion and Storage of Energy
Back to Electricity
Back to Electronics
Back to Optics
Back to Digital Communications
Back to Programming Control Systems

fischertechnik

	Sketching and Documentation Rubric				Points
Criteria	Novice-1	Apprentice-2	Proficient-3	Expert-4	
Engineering Notebook	No evidence of notes, sketches or research	Shows some evidence of notes, sketches and research	Evidence of most notes, sketches and research	Clear notes and sketches with all research documented and signed	
Cooperative Group Work	One student did all or most of the work in the group	Most team members did some work but workload varied	All team members did some work but workload varied	Workload is divided and shared equally by all group members	
Project Design	The sketches are incomplete or poorly drawn. They are hard to read	The sketches are complete , but design is poor and will not link to other blocks	The project is complete, well constructed and will link to other blocks	The project is complete, well planned, always works and is easily adaptable to the set.	
Presentation	Some difficulty communicating ideas. One member presents to class	Good communication. One member presents to class	Group communicates well and all members present to class.	Entire group communicates with enthusiasm. All members contribute and know their responsibilities	
Completeness of requirements	Less than 60% of the requirements are met	Between 60 and 80% of the requirements are met	Between 81 and 99% of the requirements are met	Total inclusion of all tasks. 100% of requirements are met	
				Total---->	

Comments:

Back

fischertechnik ®

	Simple Machines Rubric	Points

Criteria	Novice-1	Apprentice-2	Proficient-3	Expert-4	
Engineering Notebook	No evidence of notes, calculations or research	Shows some evidence of notes, calculations and research	Evidence of most notes, calculations and research	Clear notes and calculations with all research documented and signed	
Cooperative Group Work	One student did all or most of the work in the group	Most team members did some work but workload varied	All team members did some work but workload varied	Workload is divided and shared equally by all group members	
Project Design	The simple machines display is incomplete or poorly conceived	The simple machines display is complete , poorly constructed and partially works	The simple machines display is complete, well constructed and works	The simple machines display is complete, well planned, always works and is easily adaptable.	
Presentation	Some difficulty communicating ideas. One member presents PowerPoint	Good communication. One member presents PowerPoint	Group communicates well and all members present PowerPoint	Entire group communicates with enthusiasm. All members contribute and know their responsibilities	
Completeness of requirements	Less than 60% of the requirements are met	Between 60 and 80% of the requirements are met	Between 81 and 99% of the requirements are met	Total inclusion of all tasks. 100% of requirements are met	
				Total---->	

Comments:

Back

fischertechnik ®

Mechanical Systems Rubric

Points

Criteria	Novice-1	Apprentice-2	Proficient-3	Expert-4	
Engineering Notebook	No evidence of notes, calculations or research	Shows some evidence of notes, calculations and research	Evidence of most notes, calculations and research	Clear notes and calculations with all research documented and signed	
Cooperative Group Work	One student did all or most of the work in the group	Most team members did some work but workload varied	All team members did some work but workload varied	Workload is divided and shared equally by all group members	
Project Design	The prototype brake is incomplete or poorly conceived	The prototype brake is complete , poorly constructed and partially works	The prototype brake is complete, well constructed and works	The prototype brake is complete, well planned, always works and is easily adaptable.	
Presentation	Some difficulty communicating ideas. One member presents PowerPoint	Good communication. One member presents PowerPoint	Group communicates well and all members present PowerPoint	Entire group communicates with enthusiasm. All members contribute and know their responsibilities	
Completeness of requirements	Less than 60% of the requirements are met	Between 60 and 80% of the requirements are met	Between 81 and 99% of the requirements are met	Total inclusion of all tasks. 100% of requirements are met	
				Total---->	

Back

fischertechnik ®

	Structures Rubric	Points

Criteria	Novice-1	Apprentice-2	Proficient-3	Expert-4	
Engineering Notebook	No evidence of notes, calculations or research	Shows some evidence of notes, calculations and research	Evidence of most notes, calculations and research	Clear notes and calculations with all research documented and signed	
Cooperative Group Work	One student did all or most of the work in the group	Most team members did some work but workload varied	All team members did some work but workload varied	Workload is divided and shared equally by all group members	
Project Design	The prototype roller coaster is incomplete or poorly conceived	The prototype roller coaster is complete , poorly constructed and partially works	The prototype roller coaster is complete, well constructed and works	The prototype roller coaster is complete, well planned, always works and is easily adaptable.	
Presentation	Some difficulty communicating ideas. One member presents PowerPoint	Good communication. One member presents PowerPoint	Group communicates well and all members present PowerPoint	Entire group communicates with enthusiasm. All members contribute and know their responsibilities	
Completeness of requirements	Less than 60% of the requirements are met	Between 60 and 80% of the requirements are met	Between 81 and 99% of the requirements are met	Total inclusion of all tasks. 100% of requirements are met	
				Total---->	

Back

fischertechnik ®

Conversion and Storage of Energy Rubric

					Points
Criteria	Novice-1	Apprentice-2	Proficient-3	Expert-4	
Engineering Notebook	No evidence of notes, calculations or research	Shows some evidence of notes, calculations and research	Evidence of most notes, calculations and research	Clear notes and calculations with all research documented and signed	
Cooperative Group Work	One student did all or most of the work in the group	Most team members did some work but workload varied	All team members did some work but workload varied	Workload is divided and shared equally by all group members	
Project Design	The prototype energy source demonstration is incomplete or poorly conceived	The prototype energy source demonstration is complete , poorly constructed and partially works	The prototype energy source demonstration is complete, well constructed and works	The prototype energy source demonstration is complete, well planned, always works and is easily adaptable.	
Presentation	Some difficulty communicating ideas. One member presents PowerPoint	Good communication. One member presents PowerPoint	Group communicates well and all members present PowerPoint	Entire group communicates with enthusiasm. All members contribute and know their responsibilities	
Completeness of requirements	Less than 60% of the requirements are met	Between 60 and 80% of the requirements are met	Between 81 and 99% of the requirements are met	Total inclusion of all tasks. 100% of requirements are met	
				Total---->	

Back

Comments:

fischertechnik ®

Electricity Rubric

					Points
Criteria	Novice-1	Apprentice-2	Proficient-3	Expert-4	
Engineering Notebook	No evidence of notes , calculations or research	Shows some evidence of notes, calculations and electrical research	Evidence of most notes, calculations and electrical research	Clear notes and calculations with all electrical research documented and signed	
Cooperative Group Work	One student did all or most of the work in the group	Most team members did some work but workload varied	All team members did some work but workload varied	Workload is divided and shared equally by all group members	
Project Design	The electrical plan is incomplete or poorly conceived	The electrical plan is complete , poorly constructed and partially works	The electrical plan is complete, well constructed and works	The electrical plan is complete, well planned, always works and is easily adaptable.	
Presentation	Some difficulty communicating ideas. One member presents website	Good communication. One member presents website	Group communicates well and all members present website.	Entire group communicates with enthusiasm. All members contribute to website and know their responsibilities	
Completeness of requirements	Less than 60% of the requirements are met	Between 60 and 80% of the requirements are met	Between 81 and 99% of the requirements are met	Total inclusion of all tasks. 100% of requirements are met	
				Total---->	

Back

Comments:

fischertechnik

	Electronics Rubric	Points

Criteria	Novice-1	Apprentice-2	Proficient-3	Expert-4	
Engineering Notebook	No evidence of notes, calculations or research	Shows some evidence of notes, calculations and research	Evidence of most notes, calculations and research	Clear notes and calculations with all research documented and signed	
Cooperative Group Work	One student did all or most of the work in the group on the schematic.	Most team members did some work but workload varied on the schematic.	All team members did some work but workload varied on the schematic.	Workload on schematic is divided and shared equally by all group members	
Project Design	The schematic project is incomplete or poorly conceived	The schematic project is complete , poorly constructed and partially works	The schematic project is complete, well constructed and works	The schematic project is complete, well planned, always works and is easily adaptable.	
Presentation	Some difficulty communicating ideas. One member presents to class	Good communication. One member presents to class	Group communicates well and all members present to class.	Entire group communicates with enthusiasm. All members contribute and know their responsibilities	
Completeness of requirements	Less than 60% of the requirements are met	Between 60 and 80% of the requirements are met	Between 81 and 99% of the requirements are met	Total inclusion of all tasks. 100% of requirements are met	
				Total---->	

Back

Comments:

fischertechnik ®

Optics Rubric

Points

Criteria	Novice-1	Apprentice-2	Proficient-3	Expert-4	
Engineering Notebook	No evidence of notes, calculations, photos or research	Shows some evidence of notes, calculations, photos and research	Evidence of most notes, calculations, photos and research	Clear notes, photos and calculations with all research documented and signed	
Cooperative Group Work	One student did all or most of the work in the group	Most team members did some work but workload varied	All team members did some work but workload varied	Workload is divided and shared equally by all group members	
Project Design	The optical project is incomplete or poorly conceived	The optical project is complete , poorly constructed and partially works	The optical project is complete, well constructed and works	The optical project is complete, well planned, always works and is easily adaptable.	
Presentation	Some difficulty communicating ideas. One member presents pdf to class	Good communication. One member presents pdf to class	Group communicates well and all members present pdf to class.	Entire group communicates with enthusiasm. All members contribute and know their responsibilities	
Completeness of requirements	Less than 60% of the requirements are met	Between 60 and 80% of the requirements are met	Between 81 and 99% of the requirements are met	Total inclusion of all tasks. 100% of requirements are met	
				Total---->	

Back

Comments:

fischertechnik ®

Digital Communications Rubric

Points

Criteria	Novice-1	Apprentice-2	Proficient-3	Expert-4	
Engineering Notebook	No evidence of notes, calculations, photos or research	Shows some evidence of notes, calculations, photos and research	Evidence of most notes, calculations, photos and research	Clear notes, photos and calculations with all research documented and signed	
Cooperative Group Work	One student did all or most of the work in the group	Most team members did some work but workload varied	All team members did some work but workload varied	Workload is divided and shared equally by all group members	
Project Design	The optical communication project is incomplete or poorly conceived	The optical communication project is complete , poorly constructed and partially works	The optical communication project is complete, well constructed and works	The optical communication project is complete, well planned, always works and is easily adaptable.	
Presentation	Some difficulty communicating ideas. One member presents pdf to class	Good communication. One member presents pdf to class	Group communicates well and all members present pdf to class.	Entire group communicates with enthusiasm. All members contribute and know their responsibilities	
Completeness of requirements	Less than 60% of the requirements are met	Between 60 and 80% of the requirements are met	Between 81 and 99% of the requirements are met	Total inclusion of all tasks. 100% of requirements are met	
				Total---->	

Comments:

Back

fischertechnik ®

	Programming Rubric	Points

Criteria	Novice-1	Apprentice-2	Proficient-3	Expert-4	
Engineering Notebook	No evidence of notes, calculations or research	Shows some evidence of notes, calculations and research	Evidence of most notes, calculations and research	Clear notes and calculations with all research documented and signed	
Cooperative Group Work	One student did all or most of the work in the group	Most team members did some work but workload varied	All team members did some work but workload varied	Workload is divided and shared equally by all group members	
Group Activities	Many learning activities are incomplete or poorly done	Most learning activities are complete , poorly constructed and partially work	All learning activities are complete, well-constructed and work	The learning activities are complete, well planned, always work and are easily adaptable.	
Project Design	The garage door project is incomplete or poorly conceived	The garage door project is complete , poorly constructed and partially works	The garage door project is complete, well-constructed and works	The garage door project is complete, well planned, always works and is easily adaptable.	
Presentation	Some difficulty communicating ideas. 1 member presents to class	Good communication. 1 member presents to class	Group communicates well and all members present to class.	Entire group communicates with enthusiasm. All members contribute and know their responsibilities	
Completeness of requirements	Less than 60% of the requirements are met	Between 60 and 80% of the requirements are met	Between 81 and 99% of the requirements are met	Total inclusion of all tasks. 100% of requirements are met	
				Total---->	

Back to Programming

Comments:

FIRE EXIT

FIRE EXIT

fischertechnik

Drive Systems

Inhalt
Contents
Contenu
Inhoud
Contenido
Conteúdo
Contenuto
Содержание
目录

Einzelteilübersicht / Spare parts list / Liste des pièces détachées / Onderdelenoverzicht / Lista da piezas / Resumo de peça individual / Singoli componenti / Перечень деталей / 零件概览 2

Montagetipps / Tips for assembly / Tuyaux pour le montage / Montagetips / Consejos para el montaje / "Dicas" para montagem / Consigli per il montaggio / Советы по сборке / 装配建议 3

Wind-Antrieb / Wind drive / Traction éolienne / Aangedreven door de wind / Impulsión por viento / Acionamento eólico / Azionamento a vento / Ветровой привод / 风驱动 5

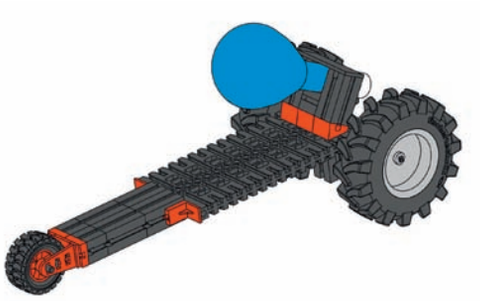

Luftballon-Antrieb / Balloon drive / Traction aérienne à l'aide d'un ballon / Aangedreven door een luchtballon / Impulsión por globo / Acionamento de balão de ar / Azionamento con palloncino / Привод от воздушного шарика / 气球驱动 10

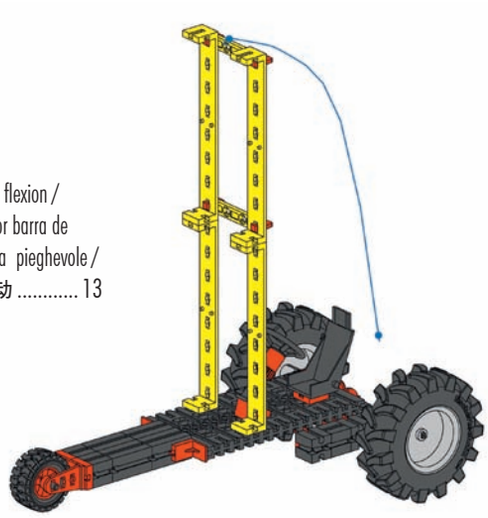

Biegestab-Antrieb / Bending rod drive / Traction par flexion / Aangedreven door een gebogen staaf / Impulsión por barra de flexión / Acionamento de arco / Azionamento a barra pieghevole / Привод от изогнутого стержня / 弯曲杆驱动 13

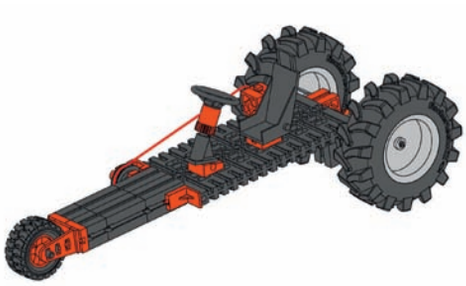

Gummimotor / Rubber band motor / Moteur caoutchouc / Gummimotor / Motor de goma / Motor de borracha elástica / Motore con elastico / Мотор с резинкой / 橡皮筋马达 16

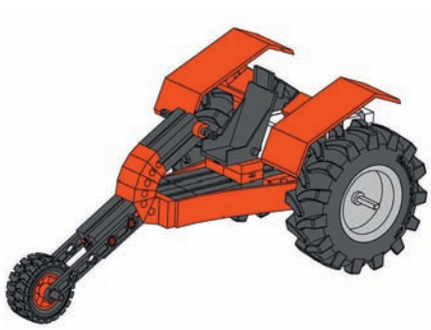

Trike mit Rückzugsmotor / Trike with pullback motor / Trike à moteur à ressort / Trike met terugtrekmotor / Triciclo motorizado con motor de retroceso / Triciclo com motor de corda / Trike con motore a carica / Трёхколёсный автомобиль с возвратным двигателем / 配回力马达的三轮摩托车 19

Inhalt
Contents
Contenu

Inhoud
Contenido
Conteúdo

Contenuto
Содержание
目录

Buggy mit Rückzugsmotor / Buggy with pullback motor / Buggy à moteur à ressort / Buggy met terugtrekmotor / Buggy con motor de retroceso / Buggy com motor de corda / Buggy con motore a carica / Багги с возвратным двигателем / 配回力马达的沙漠赛车 21

Fahrzeug mit Lenkung / Vehicle with steering / Véhicule à direction / Voertuig met besturing / Vehículo con dirección / Veículo com direção / Veicolo con sterzo / Автомобиль с рулевым управлением / 配转向系统的车辆 24

Offroader mit Lenkung und Federung / Offroad vehicle with steering and spring suspension / Véhicule tout-terrain à direction et suspension / Off-roader met besturing en vering / Todoterreno con dirección y suspensión / Veículo offroad com direção e suspensão de molas / Fuoristrada con sterzo e sospensioni / Внедорожник с подвеской и рулевым управлением / 配转向系统和弹簧减震系统的越野车 28

Offroader mit Rückzugsmotor / Offroad vehicle with pullback motor / Véhicule tout-terrain à moteur à ressort / Off-roader met terugtrekmotor / Todoterreno con motor de retroceso / Veículo offroad com motor de corda / Fuoristrada con motore a carica / Внедорожник с возвратным двигателем / 配回力马达的越野车..... 34

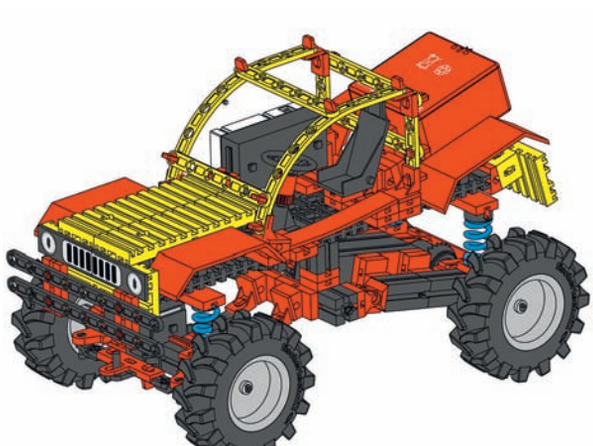

Ferngesteuerter Offroader / Remote controlled offroad vehicle / Véhicule tout-terrain téléguidé / Afstandsgestuurde off-roader / Todoterreno con control remoto / Veículo offroad com controle remoto / Fuoristrada telecomandabile / Внедорожник с дистанционным управлением / 遥控越野车..... 38

Einzelteilübersicht
Spare parts list
Liste des pièces détachées

Onderdelenoverzicht
Lista da piezas
Resumo de peça individual

Singoli componenti
Перечень деталей
零件概览

	31 010 1 x
	31 011 3 x
	31 016 1 x
	31 020 1 x
	31 060 7 x
	31 061 2 X
	31 426 2 X
	31 436 2 X
	31 597 2 X
	31 637 1 X
	31 670 2 x
	31 674 8 x
	31 690 1 x
	31 843 2 x
	31 848 6 x
	31 888 2 x
	31 891 4 x
	31 892 4 x
	31 894 1 x
	31 896 4 x
	31 915 1 x
	31 916 1 x
	31 981 12 x
	31 982 9 x
	31 983 2 x
	31 984 1 x
	32 064 4 x
	32 071 4 x
	32 851 1 x
	32 852 1 x
	32 861 4 x
	32 869 1 x
	32 879 6 x
	32 881 8 x
	32 882 2 x
	35 033 4 x
	35 049 19 x
	35 054 4 x
	35 060 2 x
	35 064 4 x
	35 065 1 x
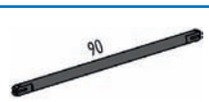	35 066 1 x
	35 067 1 x
	35 068 2 x
	35 073 2 x
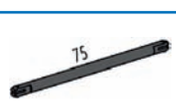	35 087 1 x
	35 129 2 x
	35 797 1 x
	35 998 2 x
	36 298 2 x
	36 323 18 x
	36 324 2 x
	36 334 2 x
	36 912 1 x
	36 913 2 x
	36 952 2 x
	37 237 16 x
	37 238 8 x
	37 468 5 x
	37 636 1 x
	37 679 4 x
	38 240 2 x
	38 241 4 x
	38 244 3 x
	38 246 4 x
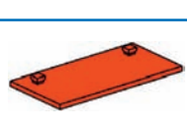	38 249 1 x
	38 260 2 x
	38 261 4 x

Einzelteilübersicht
Spare parts list
Liste des pièces détachées

Onderdelenoverzicht
Lista da piezas
Resumo de peça individual

Singoli componenti
Перечень деталей
零件概览

	38 413 1 x		38 546 2 x		122 900 1 x		142 251 1 x
	38 423 4 x		106 766 4 x		122 950 1 x		143 231 1 x
	38 428 9 x	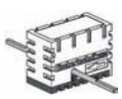	122 267 1 x		123 536 1 x		
	38 541 3 x		122 646 4 x		123 539 1 x		
	38 545 4 x		122 648 1 x		130 593 1 x		

Montagetipps
Tips for assembly
Tuyaux pour le montage

Montagetips
Consejos para el montaje
”Dicas” para montagem

Consigli per il montaggio
Советы по сборке
装配建议

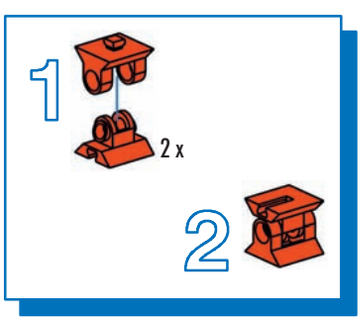

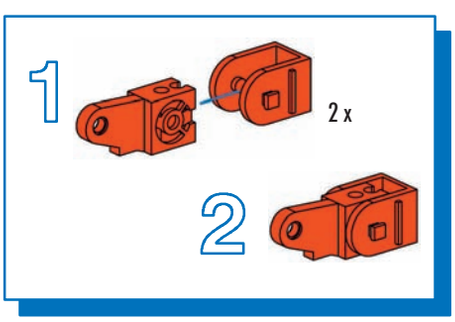

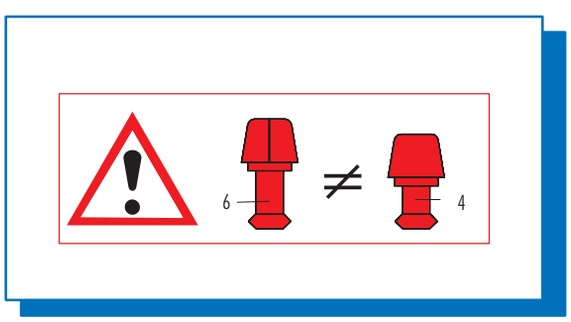

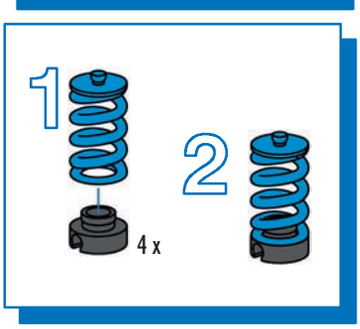

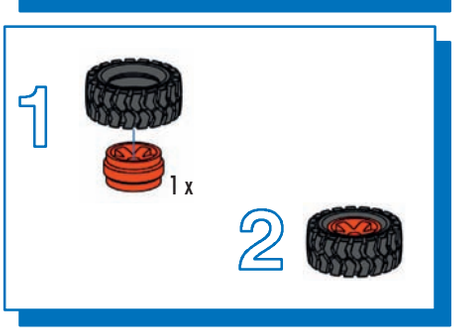

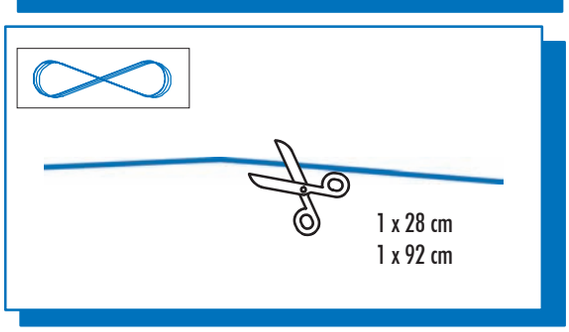

- Bei der Reifenmontage Profilrichtung links und rechts beachten!
- When mounting the tyres, please pay attention to the direction of the tread, left and right.
- Pour le montage des pneus, faire attention à la direction gauche et droite du profil.
- Let bij de bandenmontage op de profielrichting links en rechts.
- Al montar los neumáticos, tener en cuenta la dirección del perfil izquierdo y derecho.
- Ao proceder a montagem de pneus, levar em conta a direcção de perfil à esquerda e à direita.
- Al momento del montaggio delle gomme si deve osservare la direzione del profilo (a sinistra e destra)!
- При монтаже шин обратите внимание на правое и левое направление протектора!
- 装配轮胎时应注意左右轮胎沟纹的方向！

links
left
gauche
links
izquierda
à esquerda
sinistra
левое
左

rechts
right
droite
rechts
derecha
à direita
destra
правое
右

Montagetipps
Tips for assembly
Tuyaux pour le montage
Montagetips
Consejos para el montaje
"Dicas" para montagem
Consigli per il montaggio
Советы по сборке
装配建议

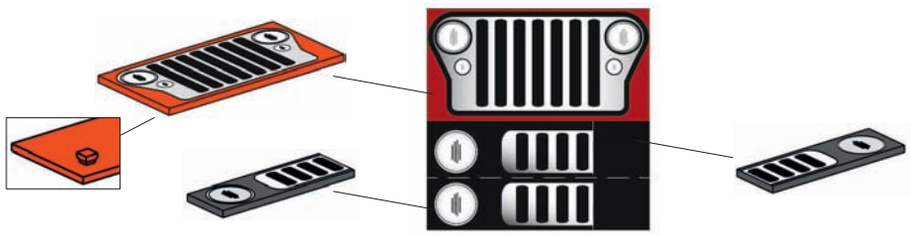

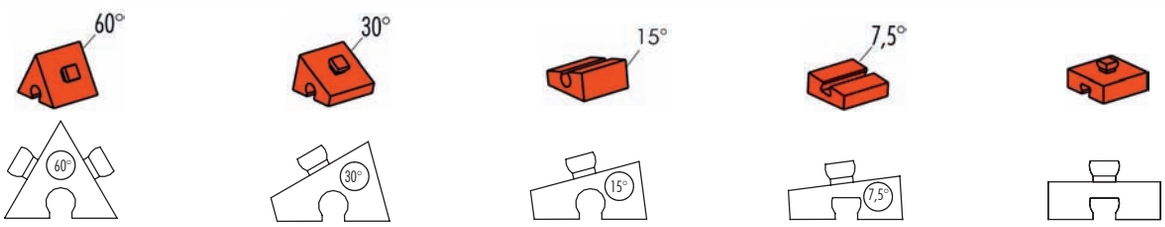

Sicherheitshinweise
Safety Information
Consignes de sécurité

- Achtung! Verletzungsgefahr an Bauteilen mit funktionsbedingten scharfen Kanten und Spitzen!
- Caution! Be careful not to hurt yourself on components with sharp or pointed edges!
- Attention! Risque de blessure sur les élements comportant des arêtes et o pointes vives indispensables au bon fonctionnement!
- Let op! U kunt zich bezeren aan bouwstenen met sherpe randen of punten!
- Attenzione! Esiste il pericolo di lesione con i pezzi di costruzione che hanno bordi e punte spigolosi necessari per la funzionalita del pezzo!
- Alle Einzelteile, insbesondere bewegliche Teile sind falls notwendig zu warten und zu reinigen.
- All components, especially moving parts, should be maintained and cleaned as necessary.
- Toutes les pièces détachées et en particulier les pièces mobiles, sont, si nécessaire, à entretenir et à nettoyer.
- Alle onderdelen, vooral de bewegende delen, kunnen, indien noodzakelijk, onderhouden en gereinigd worden.
- Es necesario limpiar y mantener en buen estado todas las diferentes piezas - especialmente las piezas móviles.

Veiligheidsrichtlijnen
Indicaciones de seguridad
Observações sobre segurança

- Atenção! Perigo de ferimentos em peças componentes com cantos vivos e pontas obrigatórios para o funcionamento !
- Attenzione! Pericolo di lesioni dovute a componenti con spigoli vivi e punte per motivi funzionali!
- Будьте осторожны! Об острые края деталей и и наконечники можно порезаться!
- 注意！
  因功能需要而带有锋利的棱边和尖角的部件可能会带来受伤危险！
- Caso necessário, todas as peças individuais, especialmente peças móveis, tem que ser submetidas à manutenção e ser limpadas.
- Se necessario, tutti i singoli componenti, soprattutto le parti mobili, si devono eventualmente sottoporre a manutenzione e pulizia.
- Все детали, особенно подвижные, требуют ухода и чистки.
- 必要时应保养和清洁所有零件，尤指运动部件。

Informazioni per la sicurezza
Указания по технике безопасности
安全指南

- Achtung. Kinder unter acht Jahren können an nicht aufgeblasenen oder geplatzten Ballons ersticken. Die Aufsicht von Erwachsenen ist erforderlich. Nicht aufgeblasene Ballons sind von Kindern fernzuhalten. Geplatzte Ballons sind unverzüglich zu entfernen. Hergestellt aus Naturkautschuklatex, der Allergien verursachen kann. Zum Aufblasen eine Pumpe verwenden!

- Warning. Children under eight years of age can suffocate on uninflated or ruptured balloons. Supervision by an adult is essential. Keep uninflated balloons away from children. Properly dispose of ruptured balloons immediately. Made of natural rubber latex which may cause allergies. Use a pump to inflate the balloon!

- Attention. Les enfants de moins de huit ans risquent de s'asphyxier avec des ballons non gonflés ou éclatés. La surveillance d'un adulte est imposé. Éloignez les ballons non gonflés des enfants. Écartez les ballons éclatés dans l'immédiat. En latex de caoutchouc naturel qui pourrait provoquer des allergies. Utilisez une pompe à ballon pour gonfler le ballon !

- Attentie. Kinderen jonger dan 8 jaar kunnen stikken in niet opgeblazen of geknapte ballonnen. Daarom is toezicht van een volwassene noodzakelijk. Dat betekent ook, dat niet opgeblazen ballonnen uit de buurt van kinderen moeten worden bewaard. Geknapte ballonnen moeten onmiddellijk worden weggegooid. Vervaardigd van latex.

- Atención. Los niños menores de 8 años pueden asfixiarse con globos no inflados o reventados. Se requiere la supervisión por parte de adultos. Globos no inflados deben mantenerse alejados de los niños. Los balones reventados deben ser eliminados inmediatamente. Fabricados de látex de caucho natural.

- Atenção. Crianças menores de oito anos podem sufocar em balões não cheios ou que estouraram. É necessária vigilância por parte de adultos. Manter balões não preenchidos fora do alcance das crianças. Remover imediatamente balões que estouraram. Fabbricato con lattice di gomma naturale che può causare allergie. Utilizzare una pompa appropriata per palloncini per il corretto gonfiaggio!

- Attenzione! I bambini con meno di otto anni di età possono soffocare con palloncini non gonfiati o scoppiati. È necessario il controllo da parte degli adulti. Tenere i palloncini non gonfiati lontano dalla portata dei bambini. I palloncini scoppiati si devono rimuovere immediatamente. Prodotti in lattice di caucciù naturale.

- Внимание. Дети младше восьми лет могут задохнуться от ненадутого или лопнувшего шарика. Разрешайте играть детям только под надзором взрослых. Убирайте ненадутые шарики от детей. Сразу же выбрасывайте лопнувшие шарики. Изготовлено из латекса на основе натурального каучука.

- 注意。未充气或破裂的气球可能对八岁以下儿童产生窒息危险。需有成人监护。未充气的气球要远离儿童。破裂的气球应立刻丢弃。由天然胶乳制成。

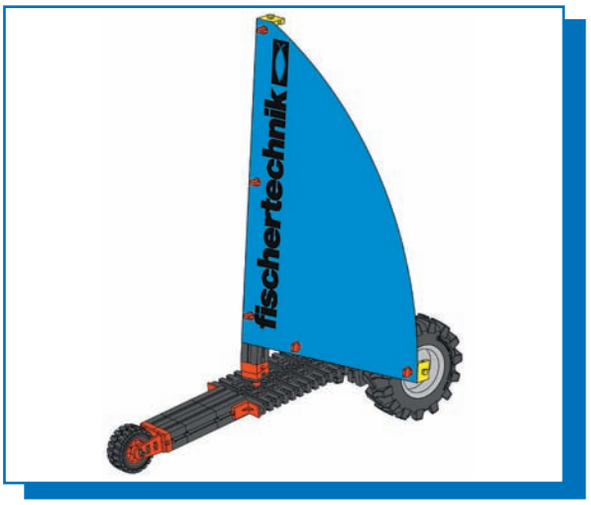

Wind-Antrieb
Wind drive
Traction éolienne
Aangedreven door de wind
Impulsión por viento
Acionamento eólico
Azionamento a vento
Ветровой привод
风驱动

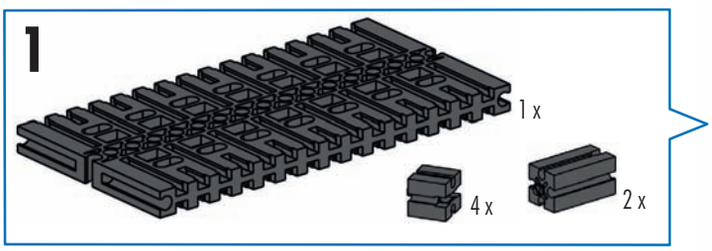

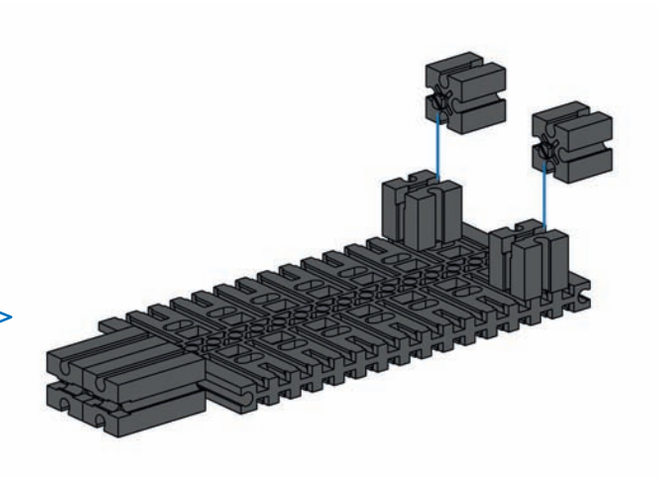

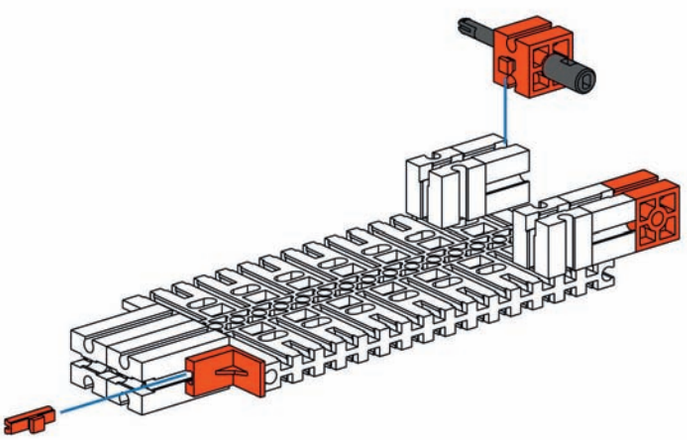

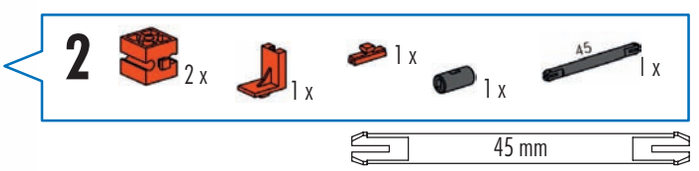

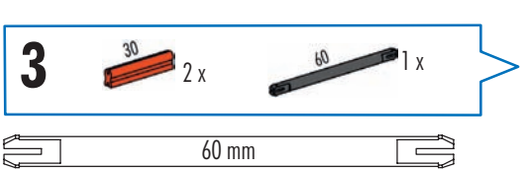

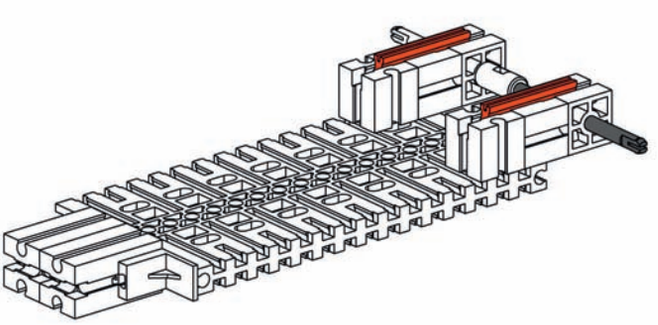

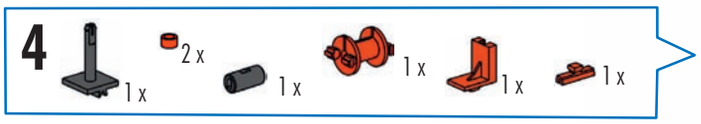
4
1 x
2 x
1 x
1 x
1 x
1 x

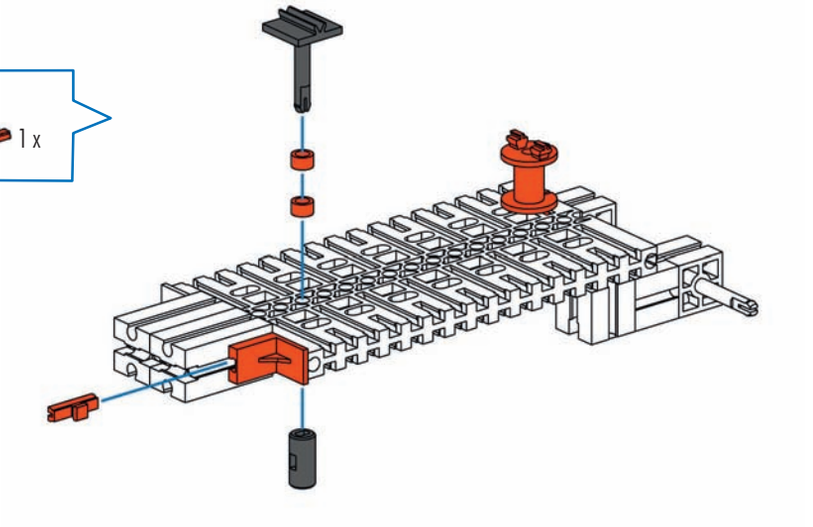

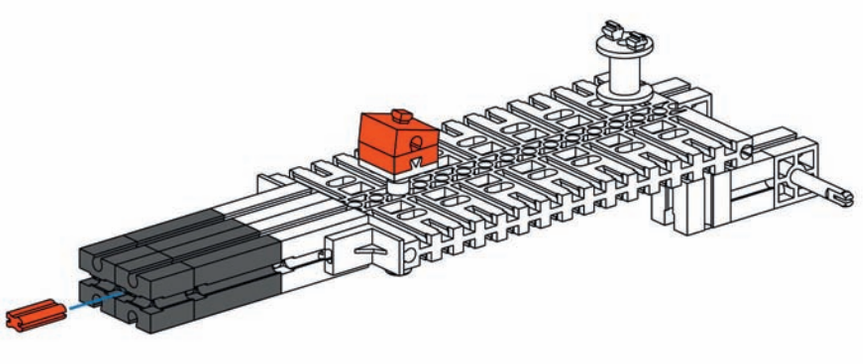

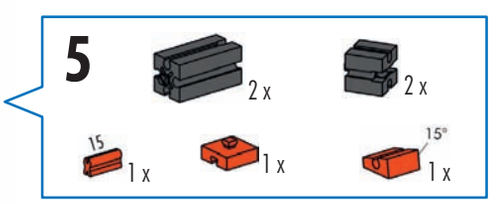
5
2 x
2 x
15
1 x
1 x
15°
1 x

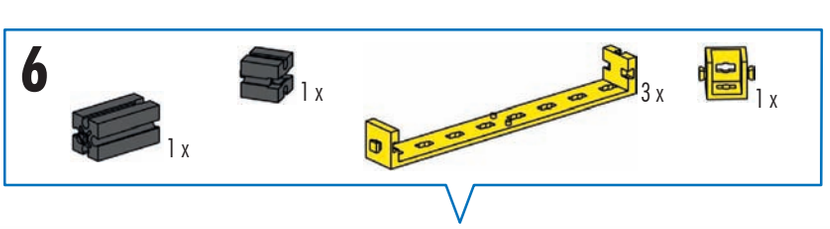
6
1 x
1 x
3 x
1 x

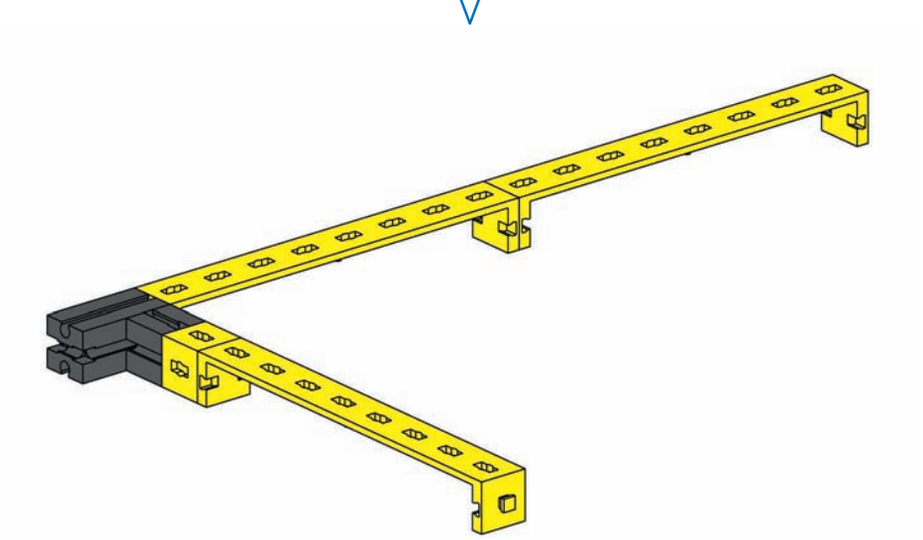

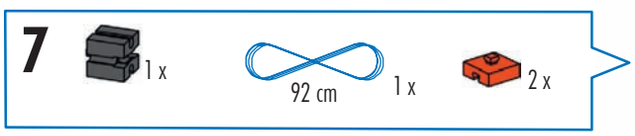
7
1 x
92 cm
1 x
2 x

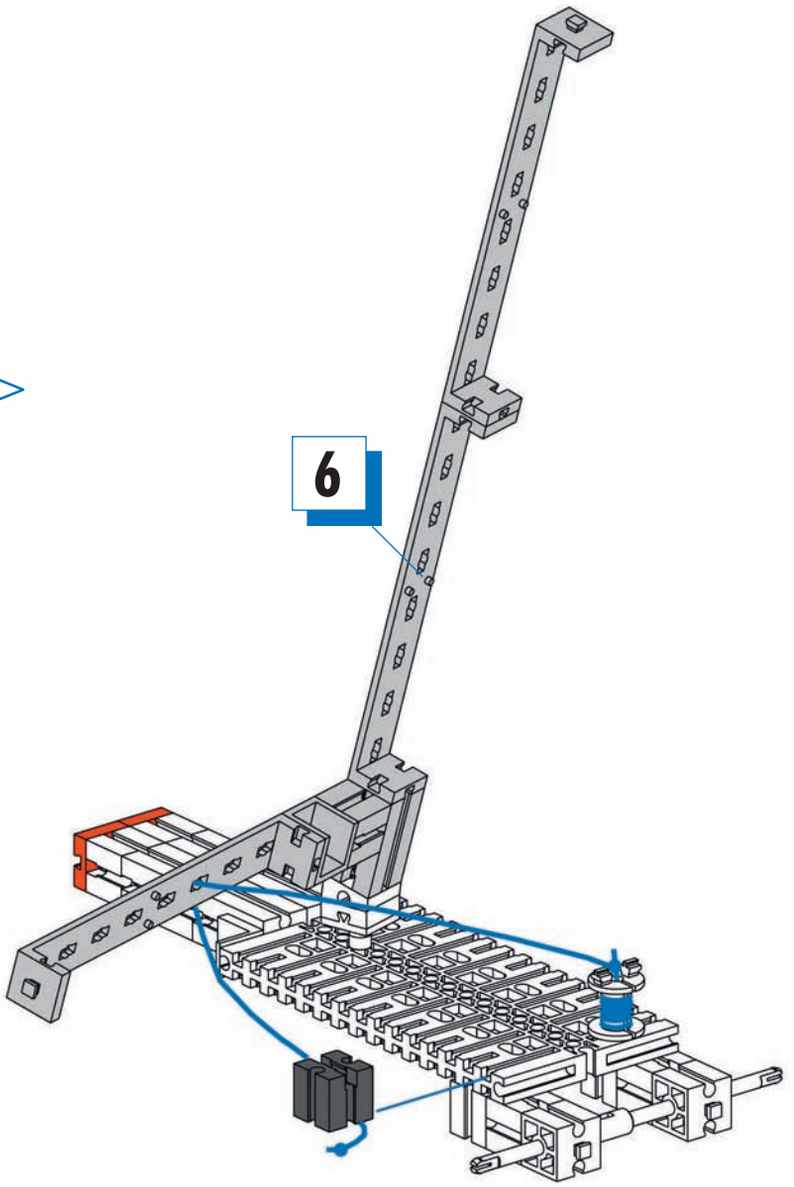
6

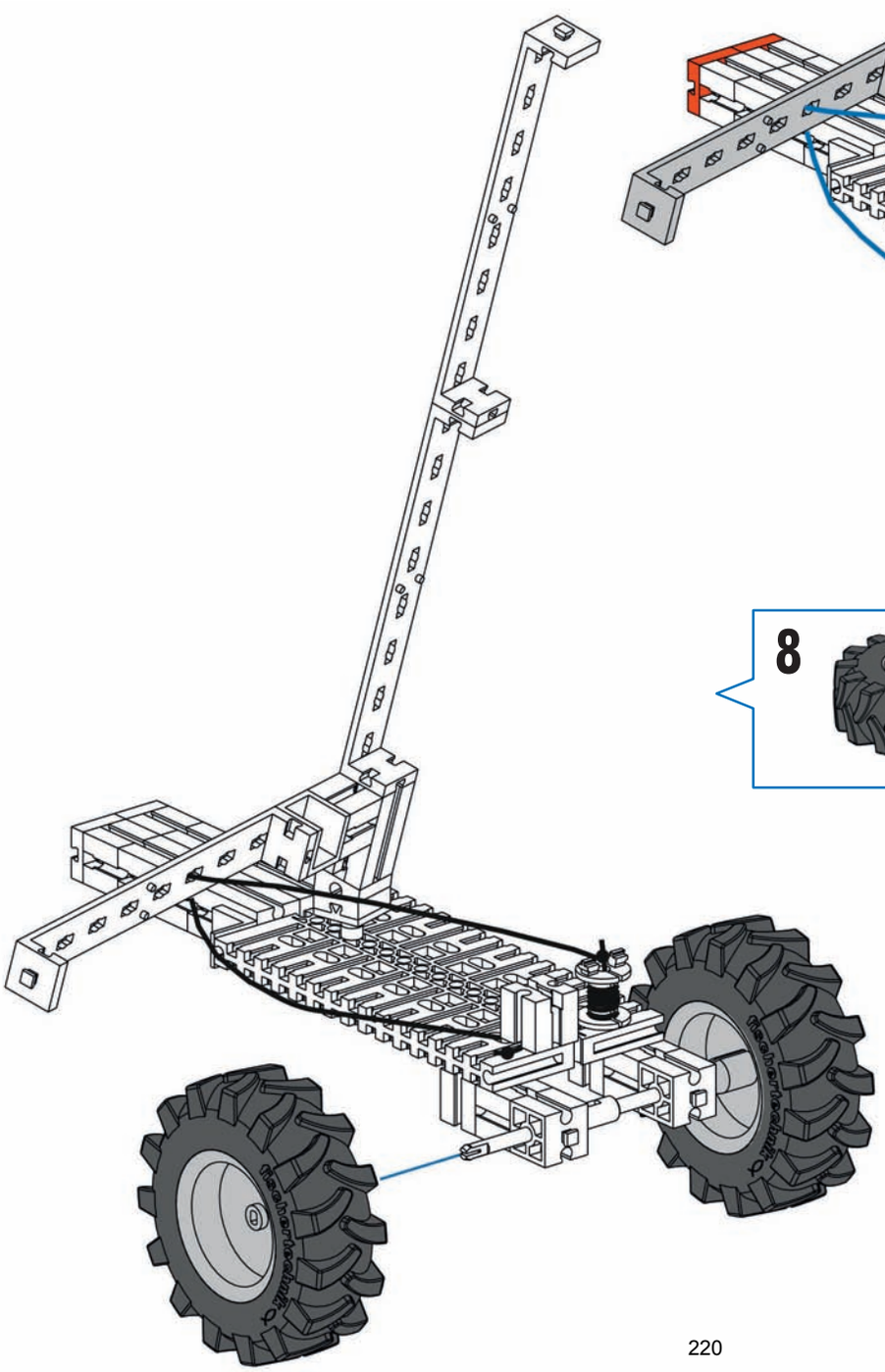

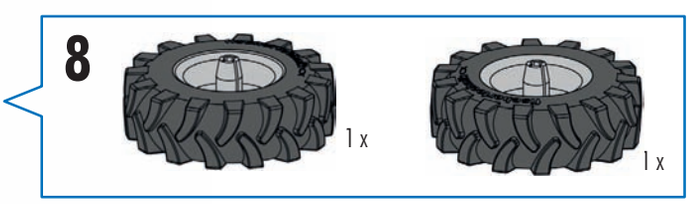
8
1 x
1 x

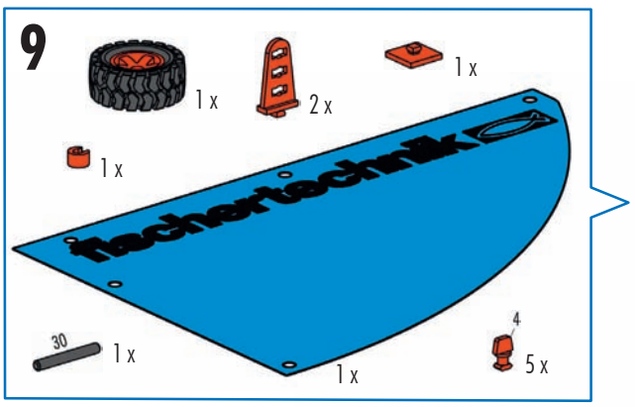
9
1 x
2 x
1 x
1 x
30
1 x
1 x
4
5 x
30 mm

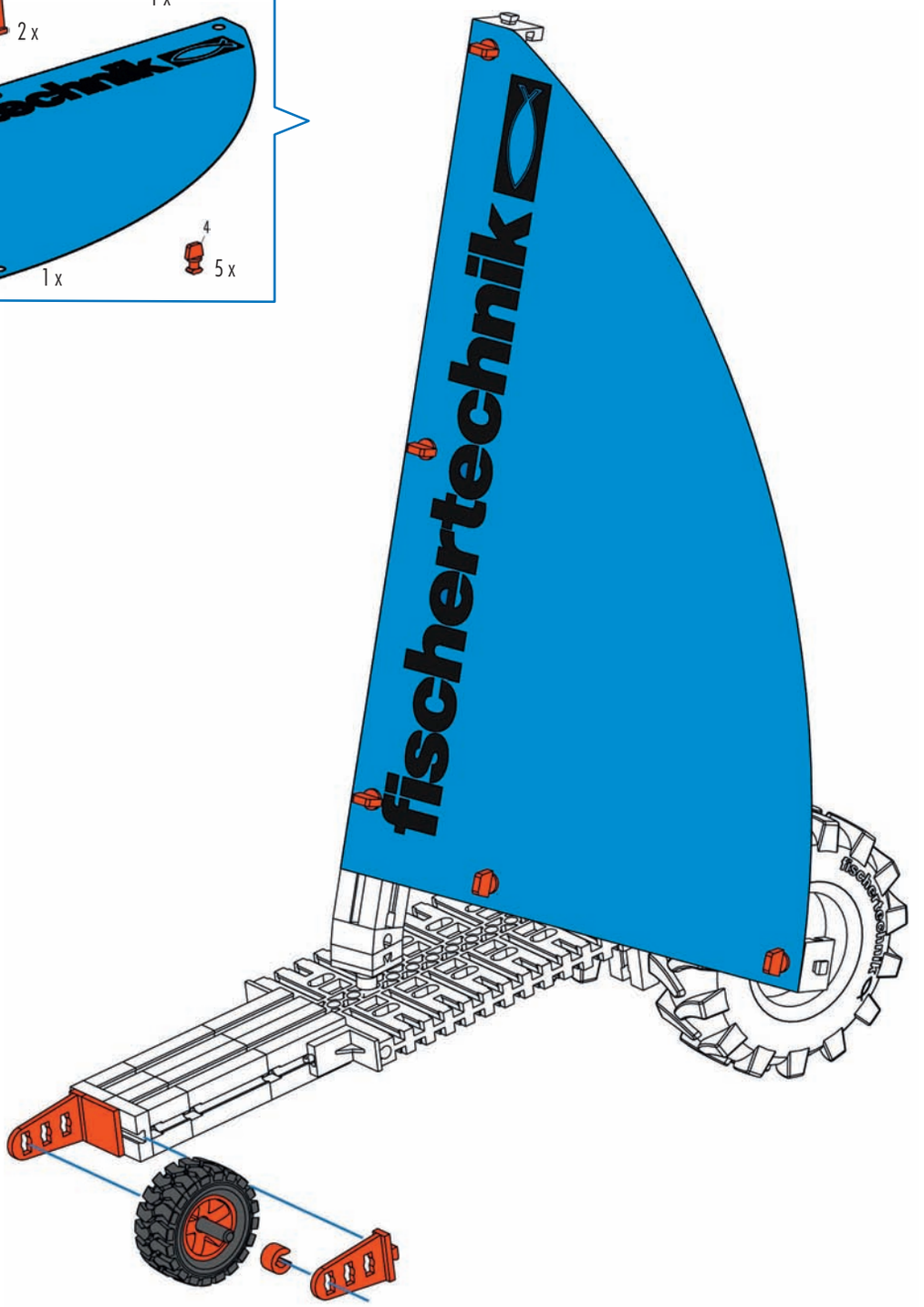
fischertechnik

fischertechnik

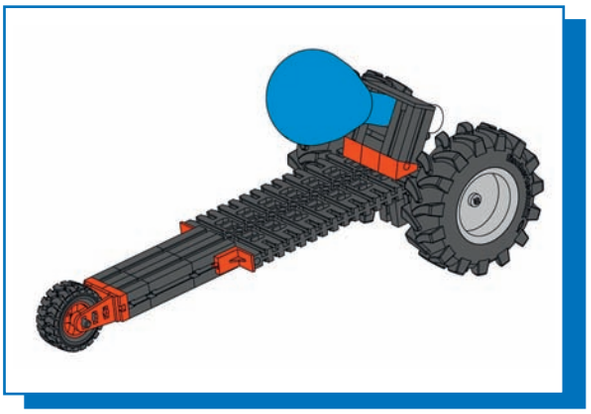

Luftballon-Antrieb
Balloon drive
Traction aérienne à l'aide d'un ballon
Aangedreven door een luchtballon
Impulsión por globo
Acionamento de balão de ar
Azionamento con palloncino
Привод от воздушного шарика
气球驱动

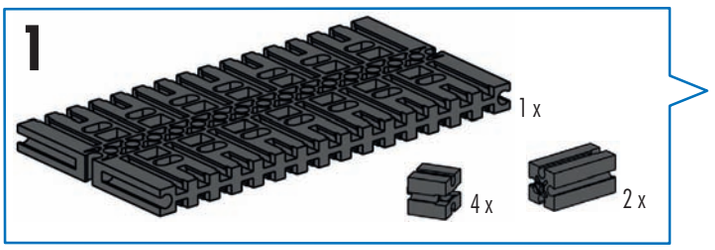

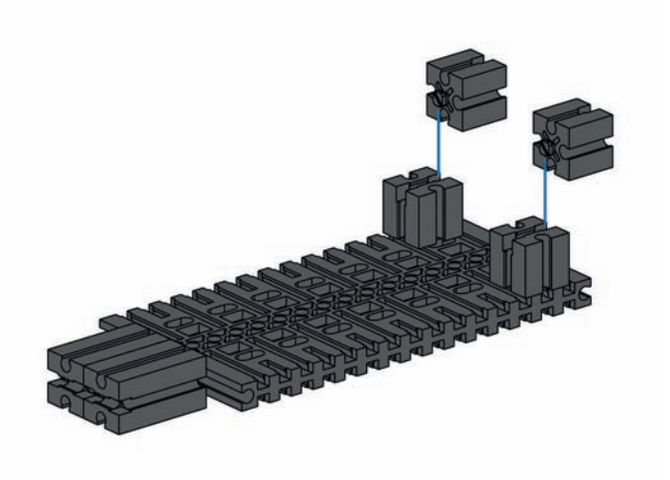

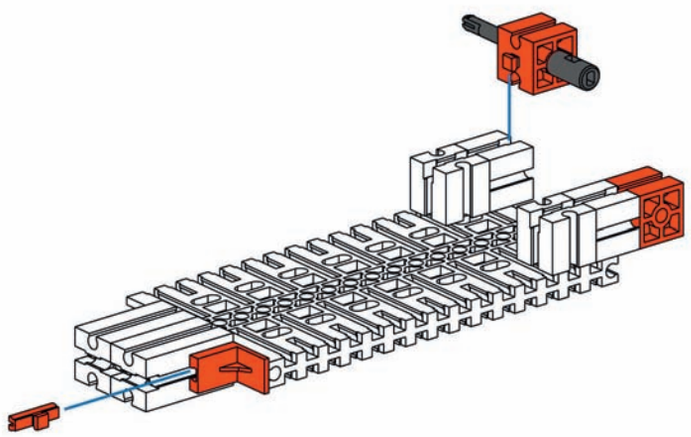

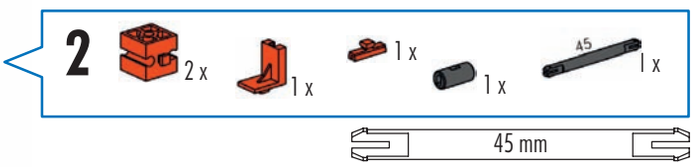

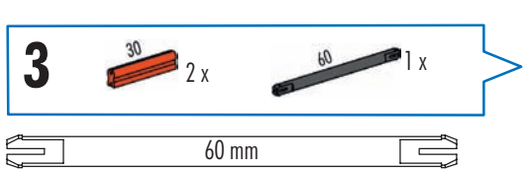

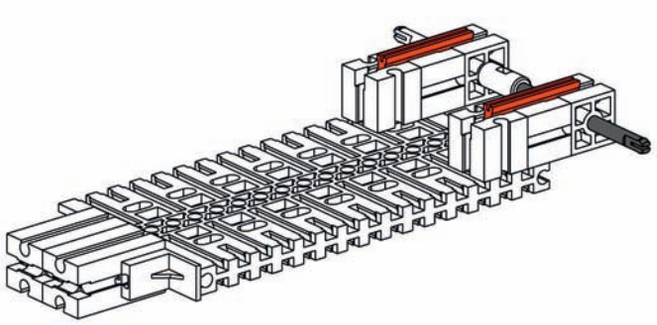

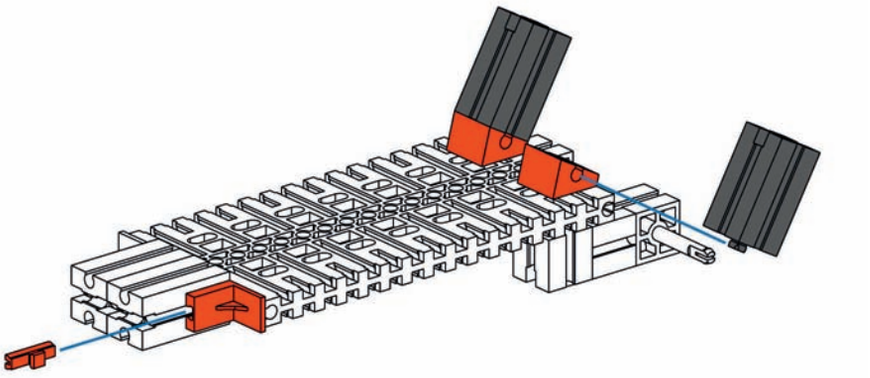

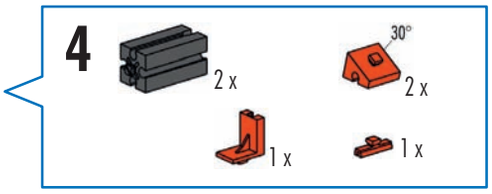
4
2 x
30°
2 x
1 x
1 x

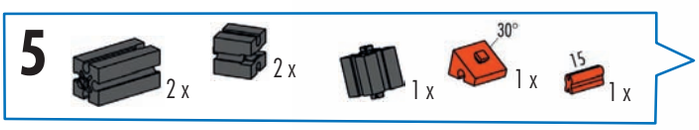
5
2 x
2 x
1 x
30°
1 x
15
1 x

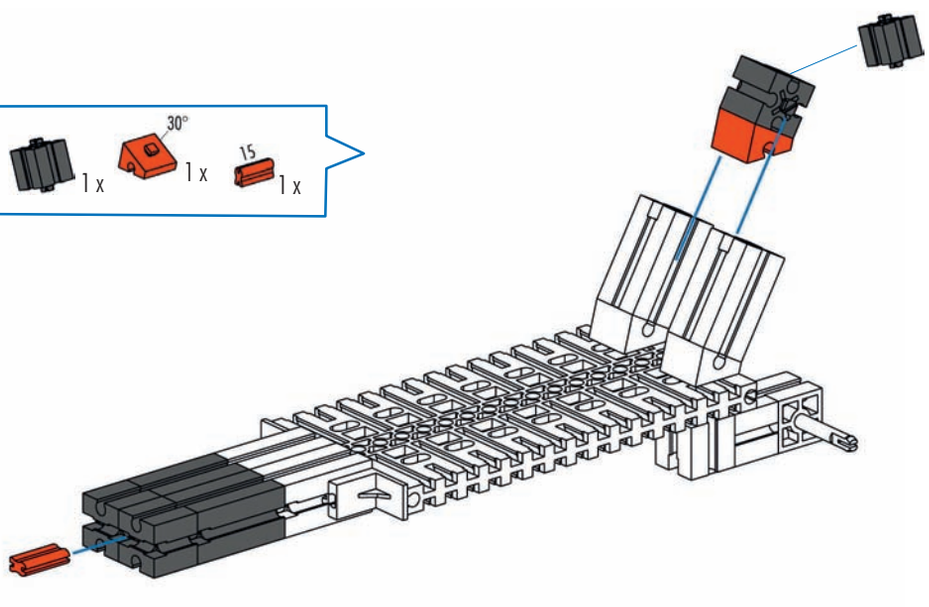

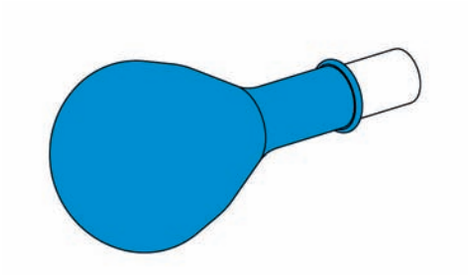

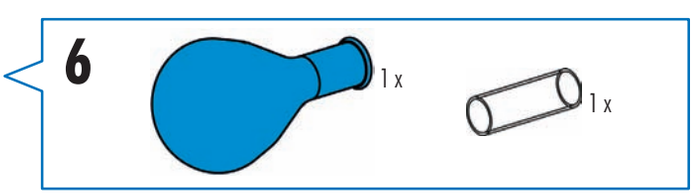
6
1 x
1 x

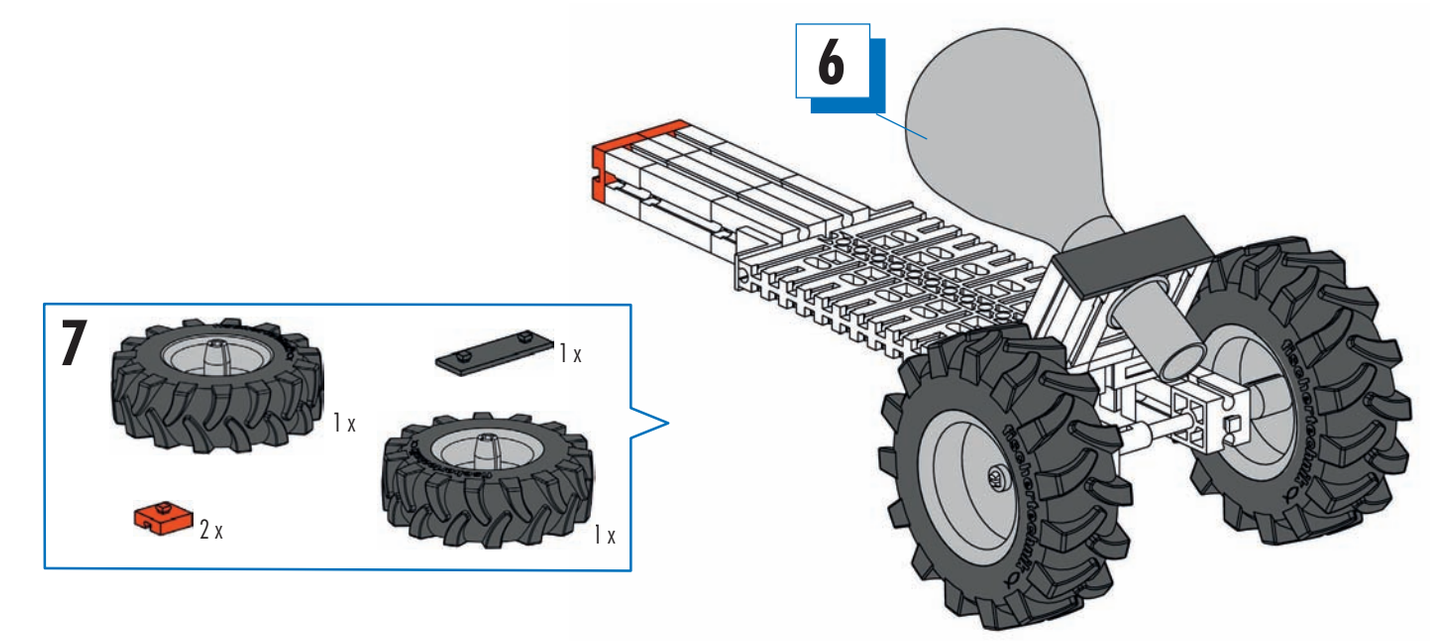
6
7
1 x
1 x
1 x
2 x

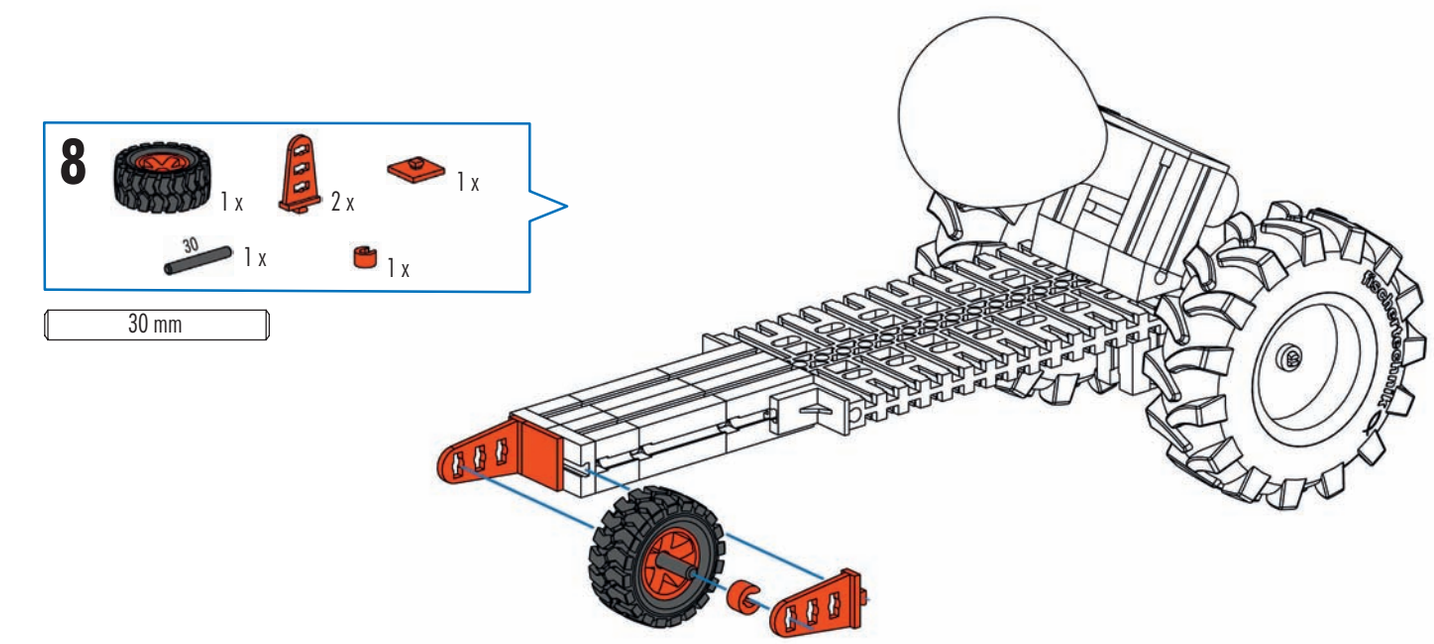
8
1 x
2 x
1 x
30
1 x
1 x
30 mm

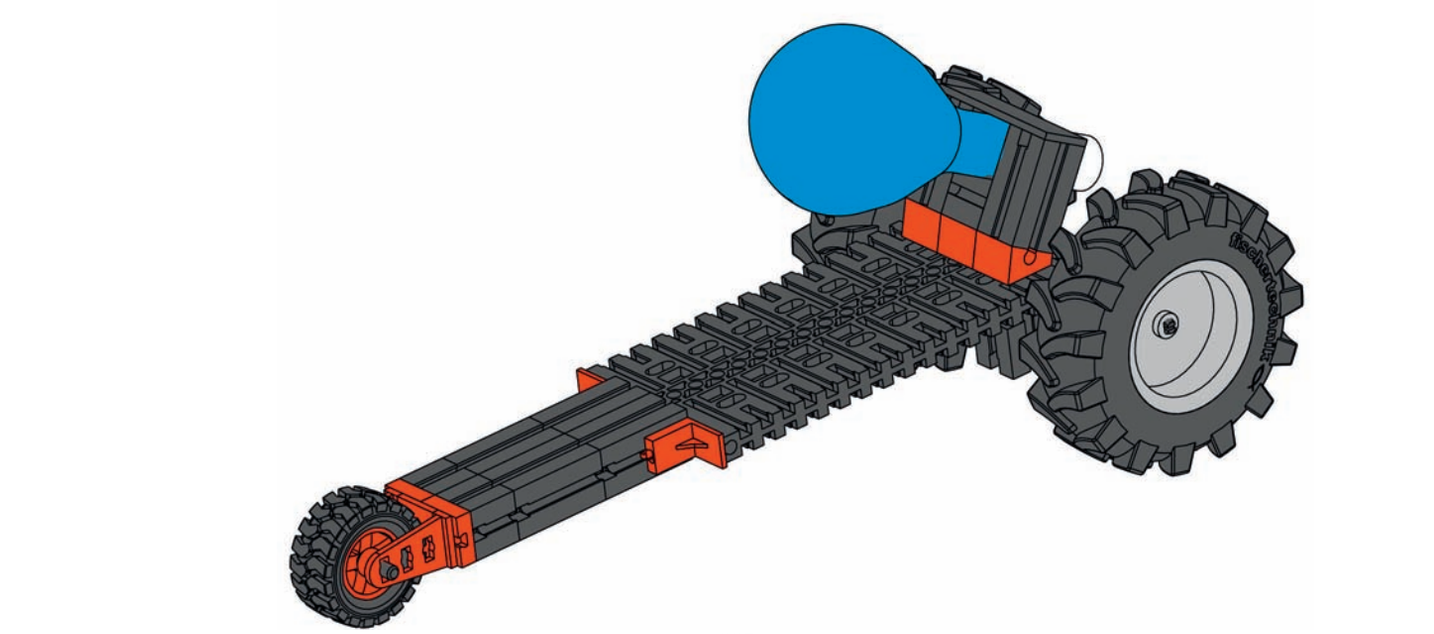

Biegestab-Antrieb
Bending rod drive
Traction par flexion

Aangedreven door een gebogen staaf
Impulsión por barra de flexión
Acionamento de arco

Azionamento a barra pieghevole
Привод от изогнутого стержня
弯曲杆驱动

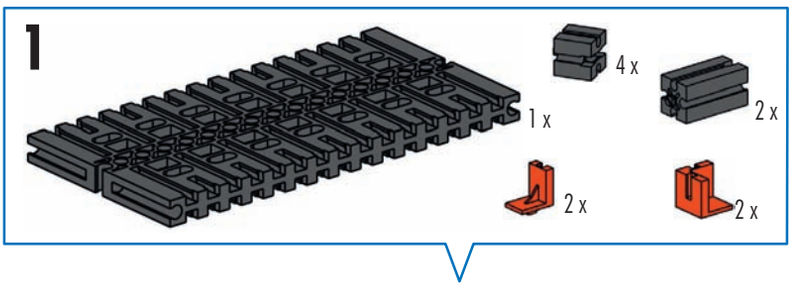

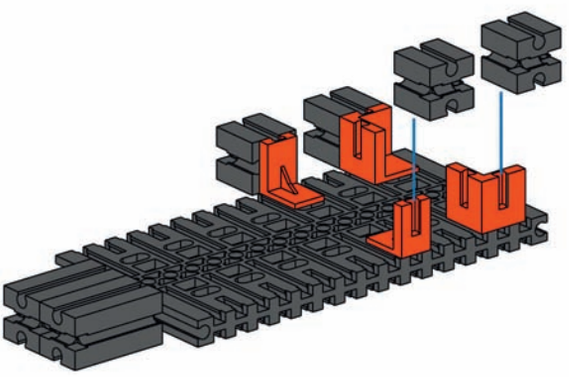

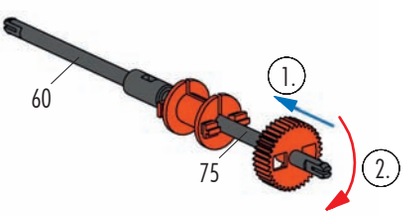

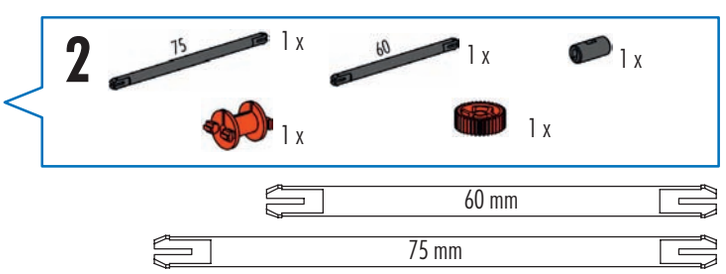

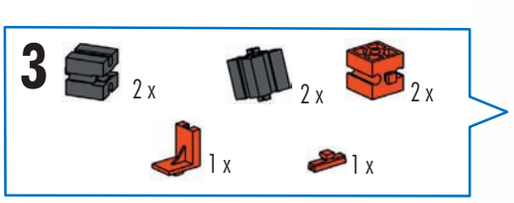

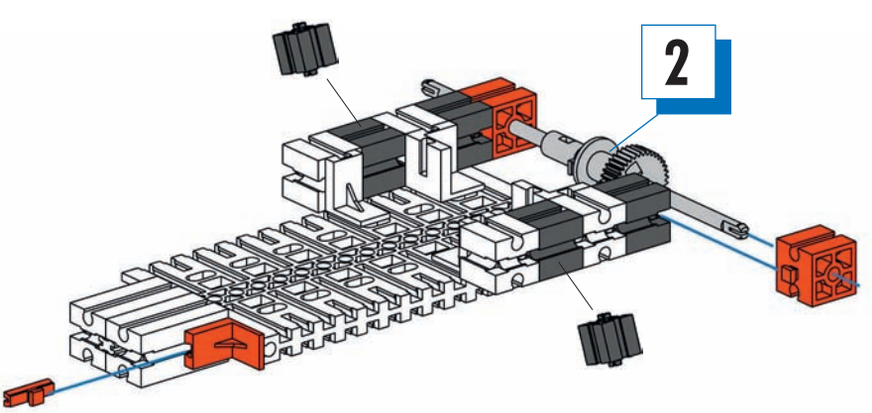

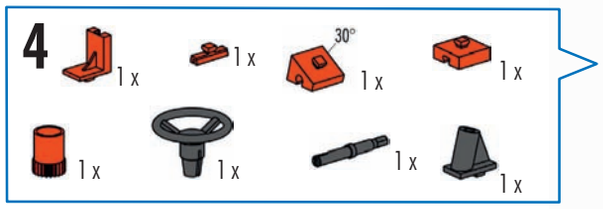
4
1 x
1 x
30°
1 x
1 x
1 x
1 x
1 x
1 x

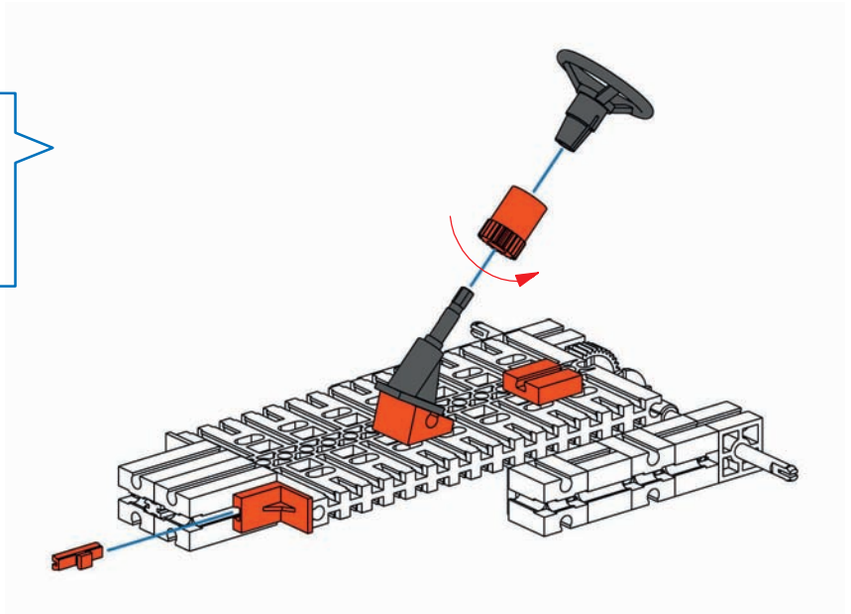

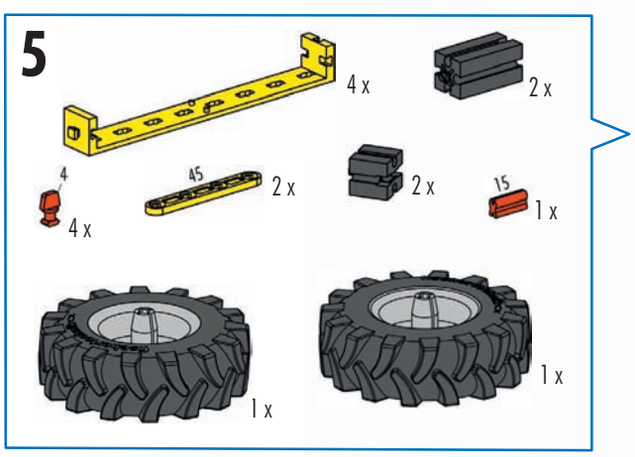
5
4 x
2 x
4
4 x
45
2 x
2 x
15
1 x
1 x
1 x

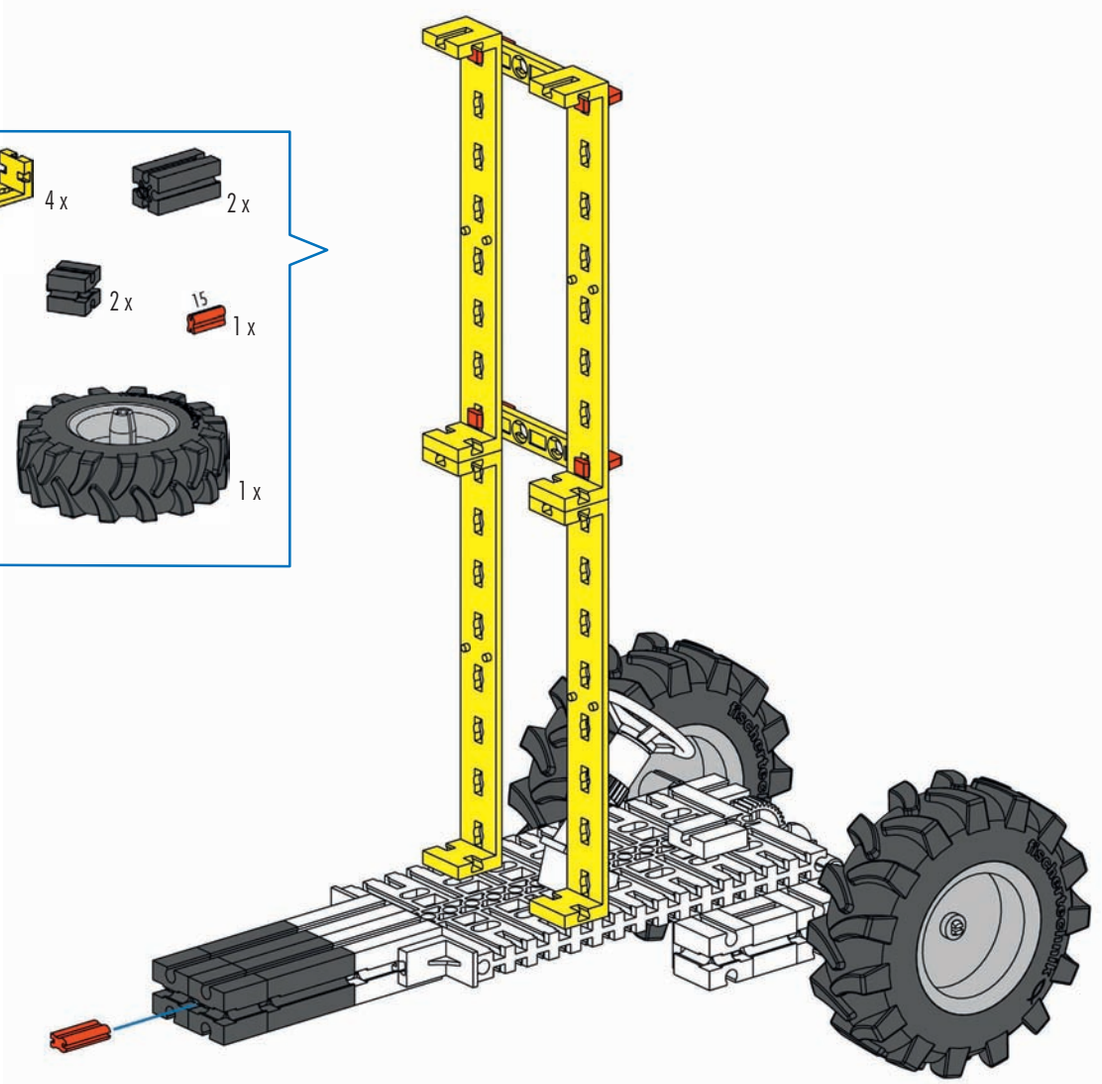

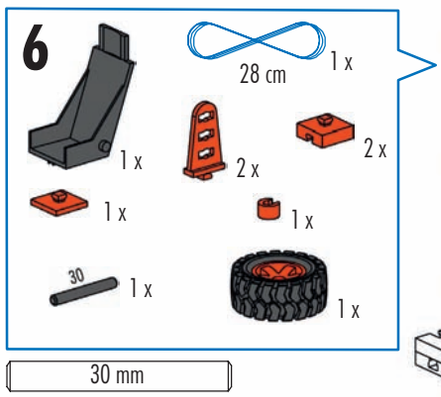

20 cm

- Auf richtige Seillänge achten!
- Ensure that cable length is correct!
- Veillez à la longueur correcte du câble !
- Let op de juiste lengte van het koord!
- ¡Observar la longitud correcta de la cuerda!
- Prestar atenção ao comprimento correto da cordão!
- Accertarsi che la fune abbia la lunghezza giusta!
- Следите за правильной длиной троса!
- 注意，绳子的长度必须正确！

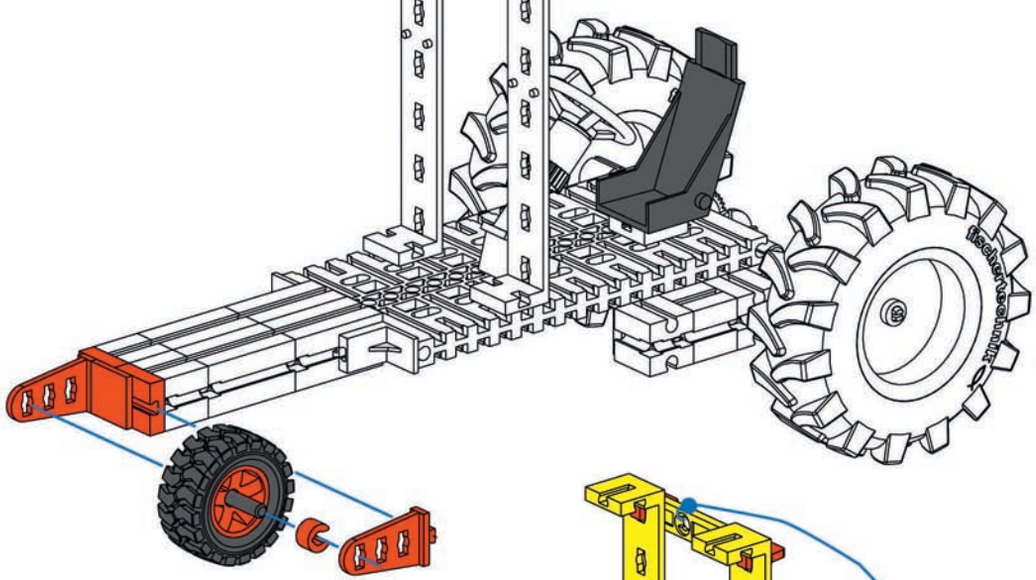

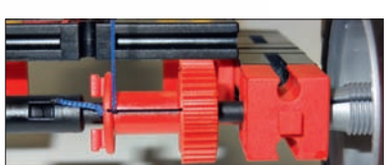

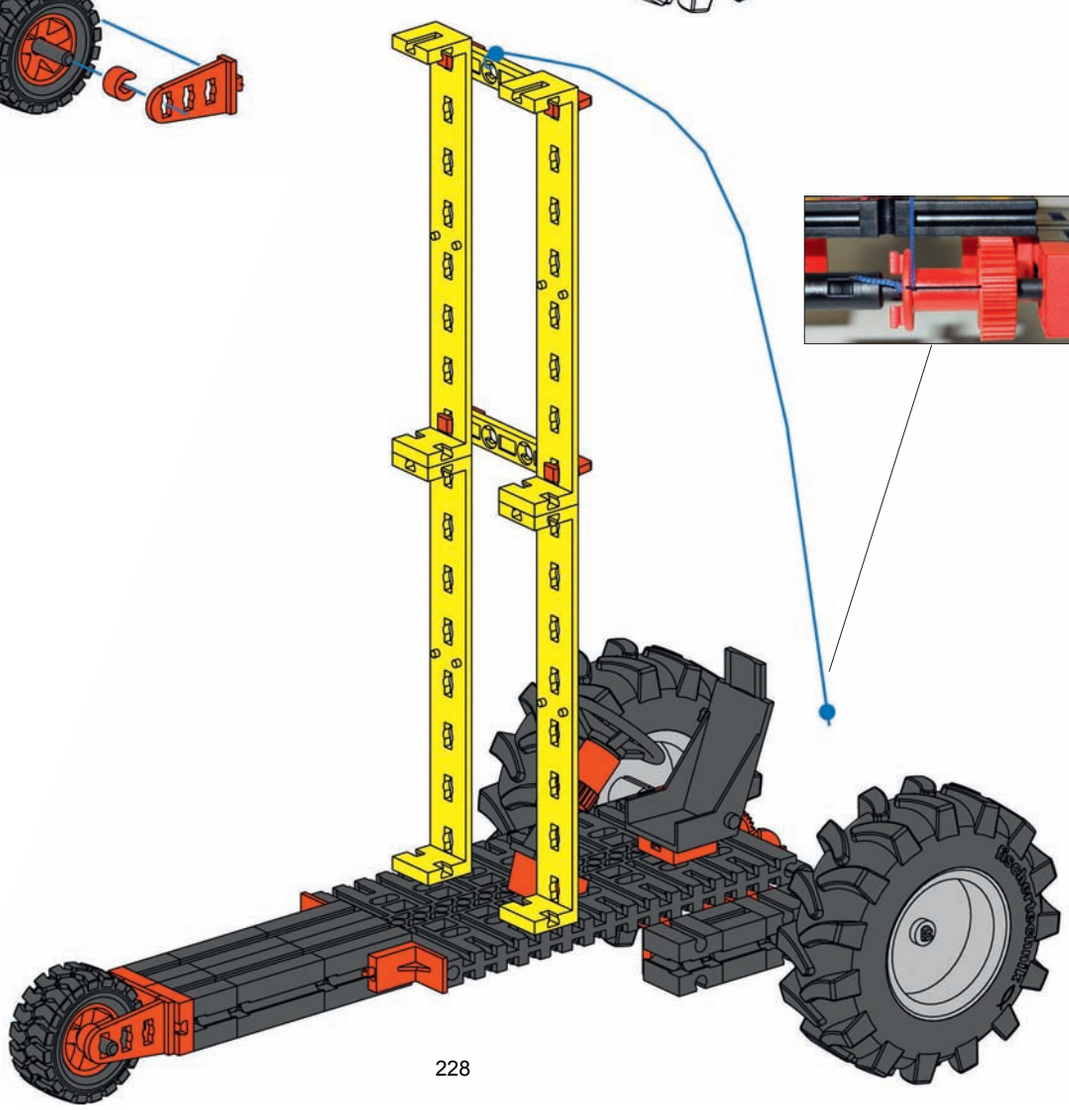

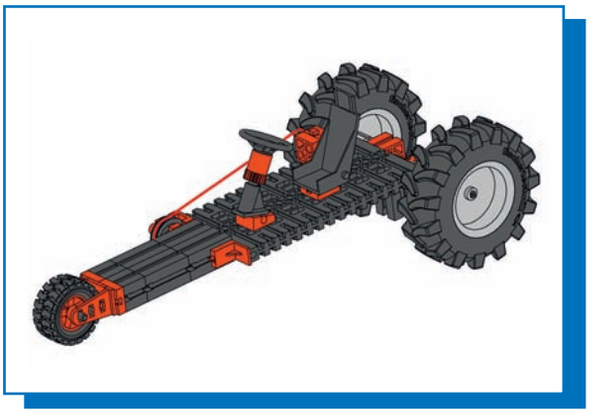

Gummimotor
Rubber band motor
Moteur caoutchouc

Gummimotor
Motor de goma
Motor de borracha elástica

Motore con elastico
Мотор с резинкой
橡皮筋马达

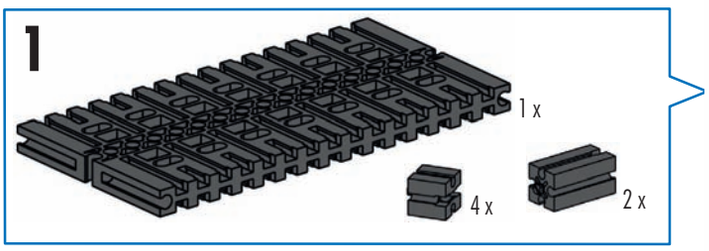

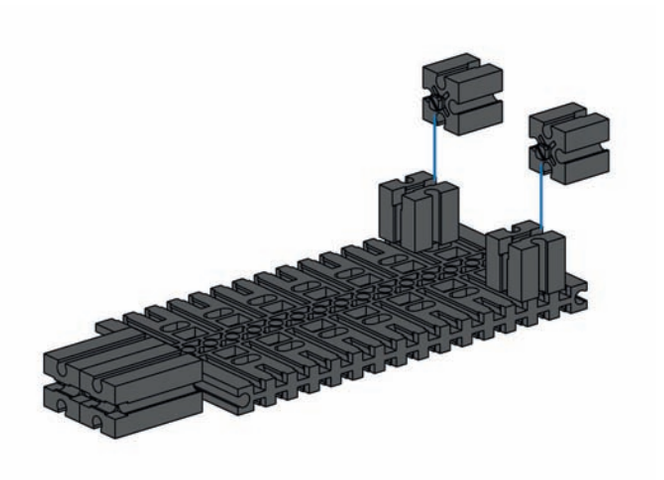

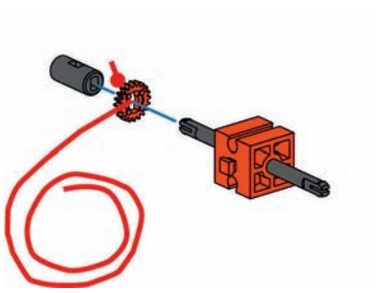

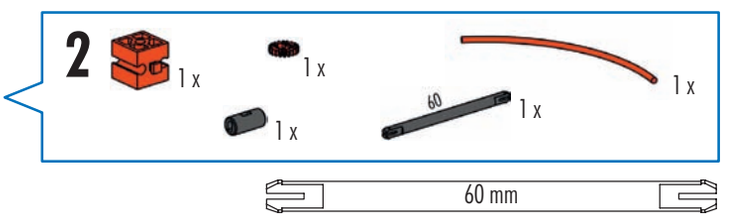

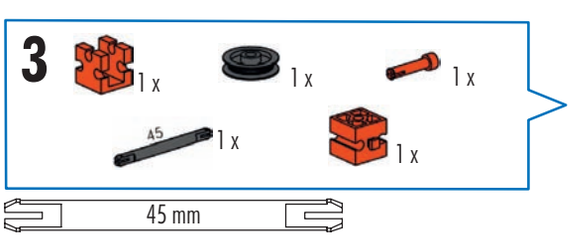

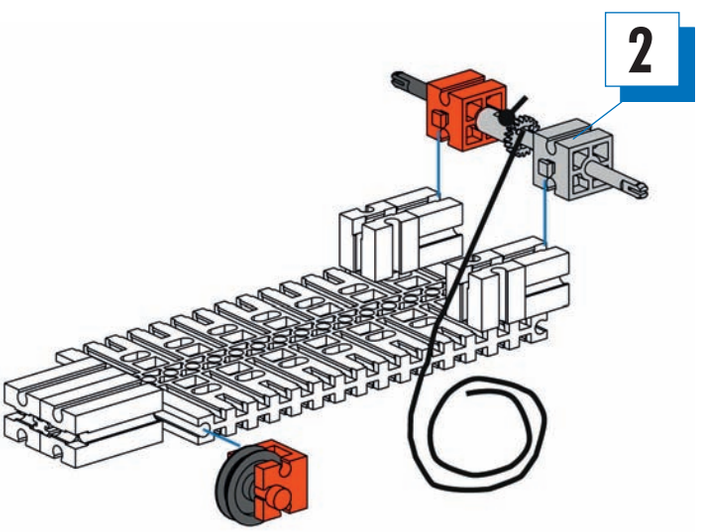

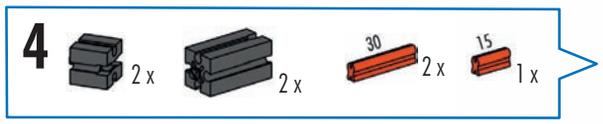
4
2 x
2 x
30
2 x
15
1 x

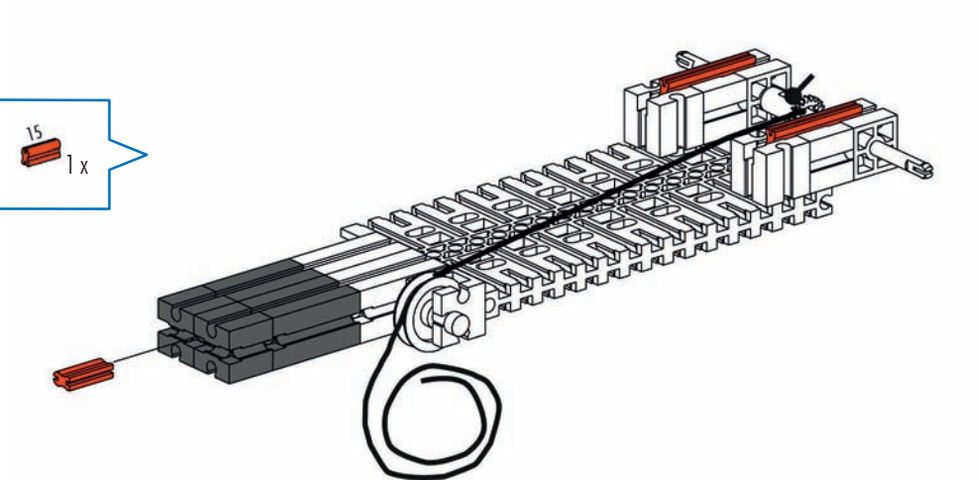

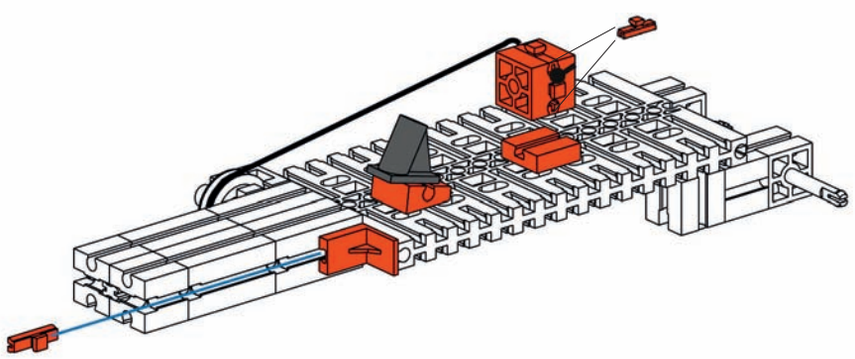

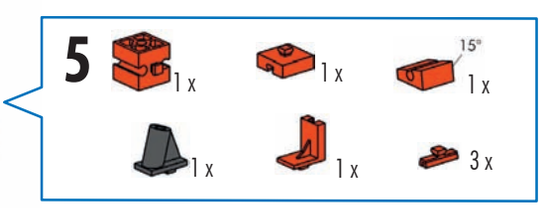
5
1 x
1 x
15°
1 x
1 x
1 x
3 x

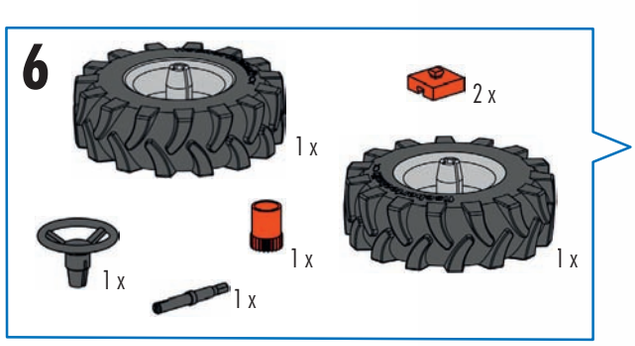
6
1 x
2 x
1 x
1 x
1 x
1 x

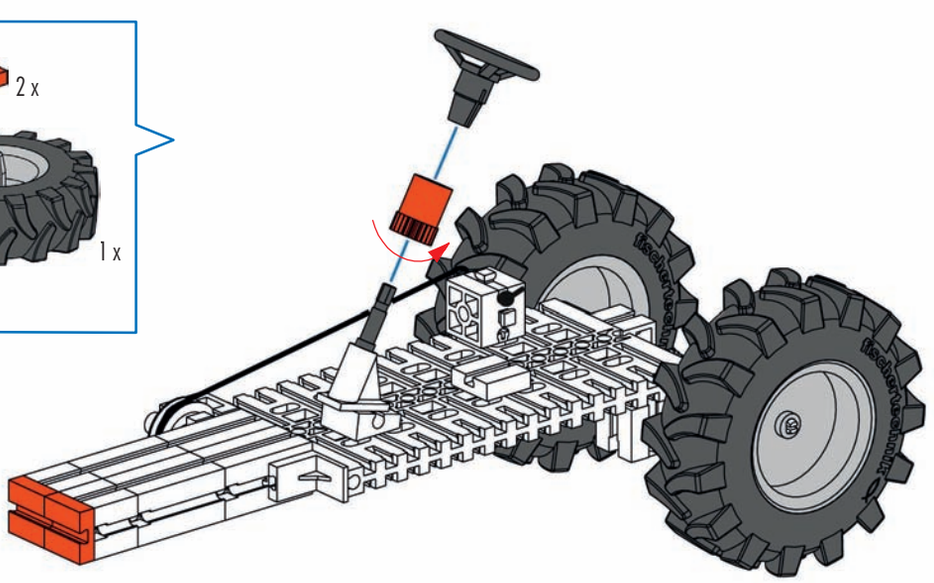

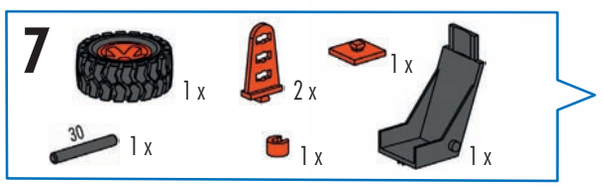
7
1 x
2 x
1 x
30
1 x
1 x
1 x
30 mm

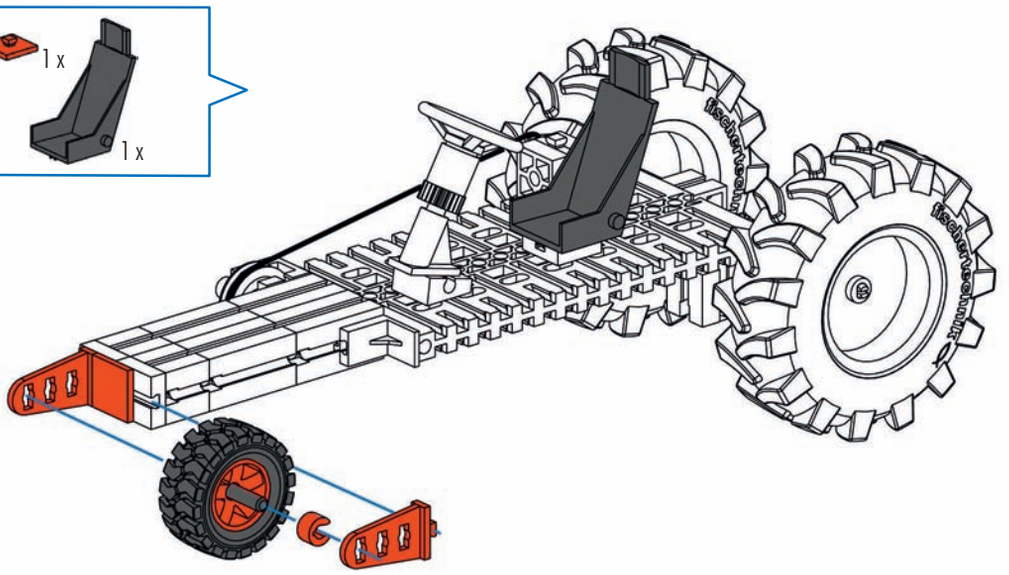

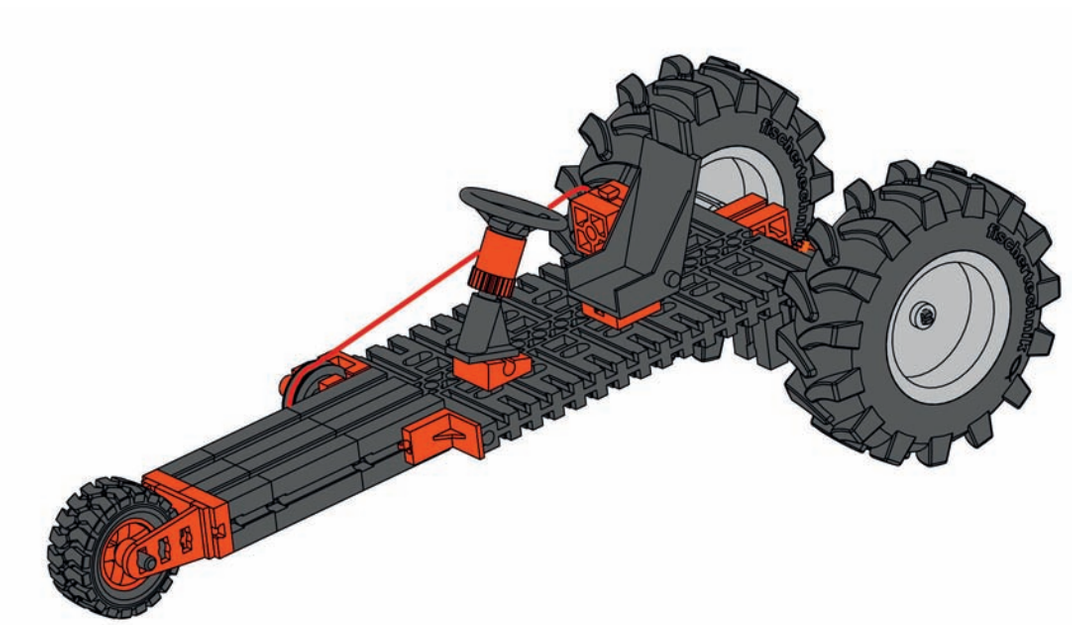

Trike mit Rückzugsmotor
Trike with pullback motor
Trike à moteur à ressort

Trike met terugtrekmotor
Triciclo motorizado con motor de retroceso
Triciclo com motor de corda

Trike con motore a carica
Трёхколёсный автомобиль с возвратным двигателем
配回力马达的三轮摩托车

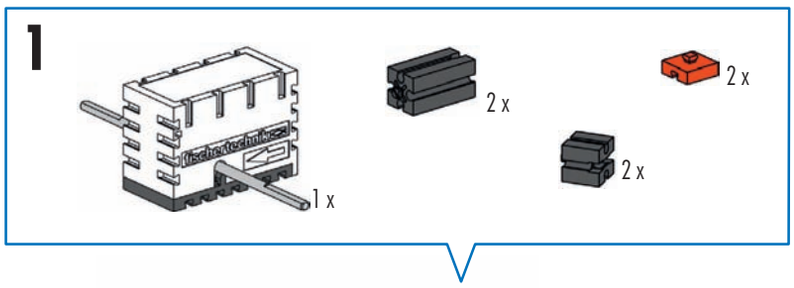

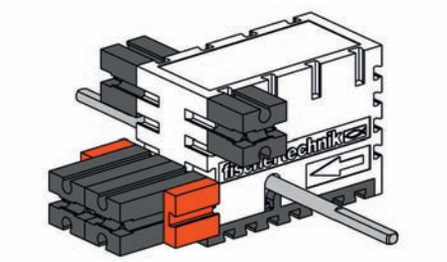

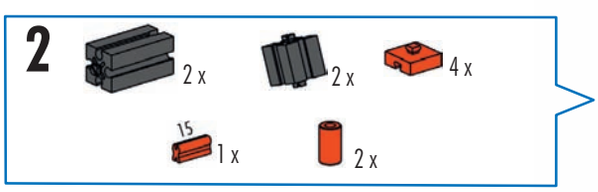

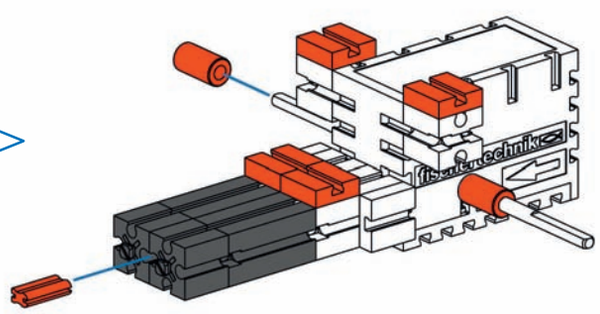

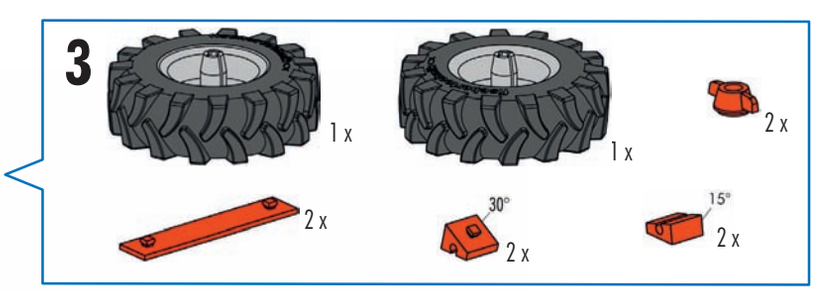

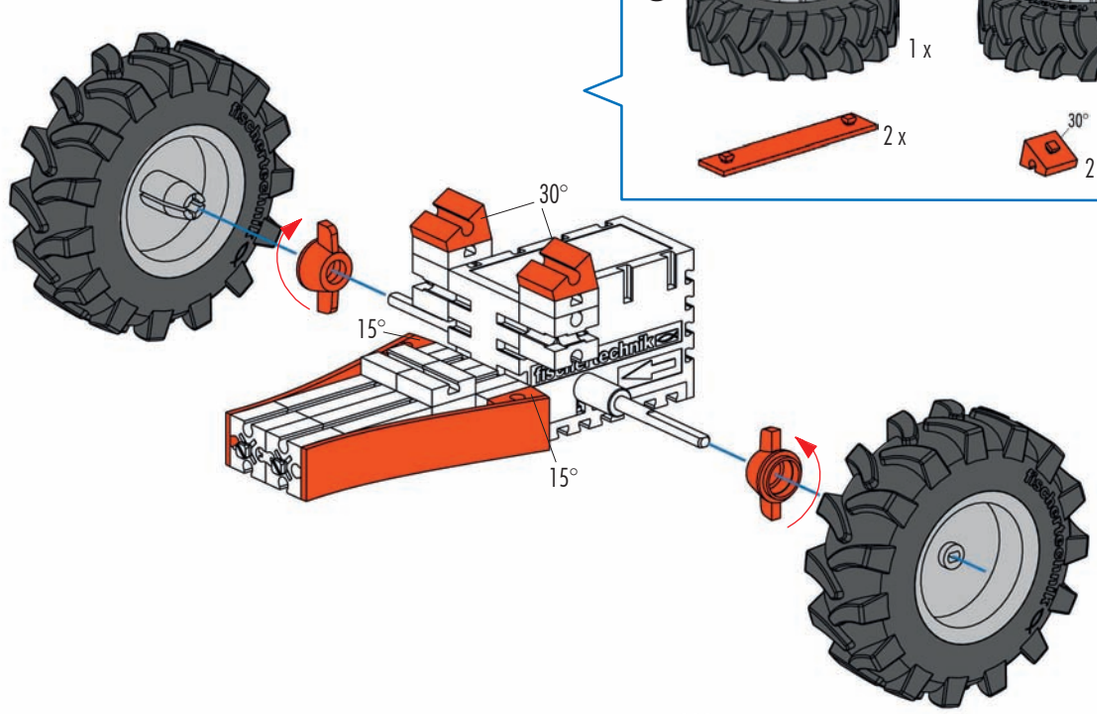

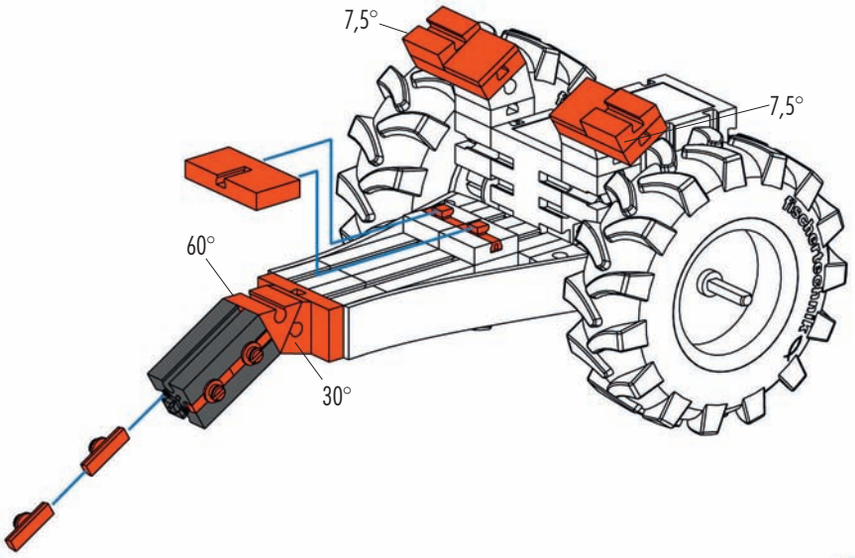
7,5°
7,5°
60°
30°

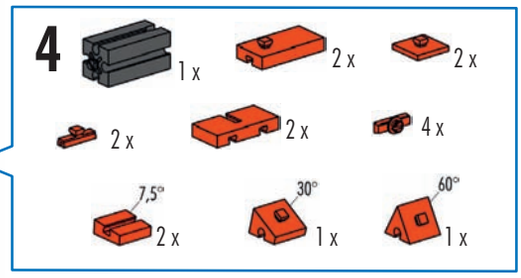
4
1 x
2 x
2 x
2 x
2 x
4 x
7,5°
2 x
30°
1 x
60°
1 x

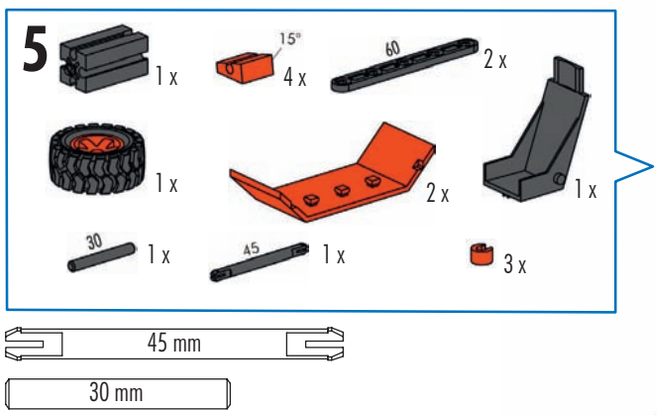
5
1 x
15°
4 x
60
2 x
1 x
2 x
1 x
30
1 x
45
1 x
3 x

45 mm
30 mm

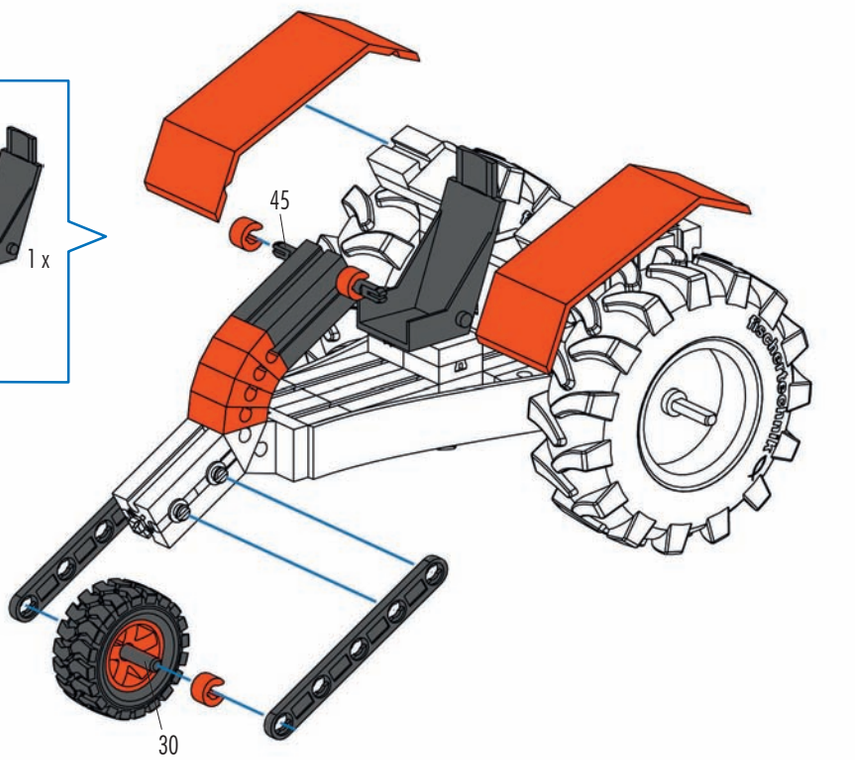
45
30

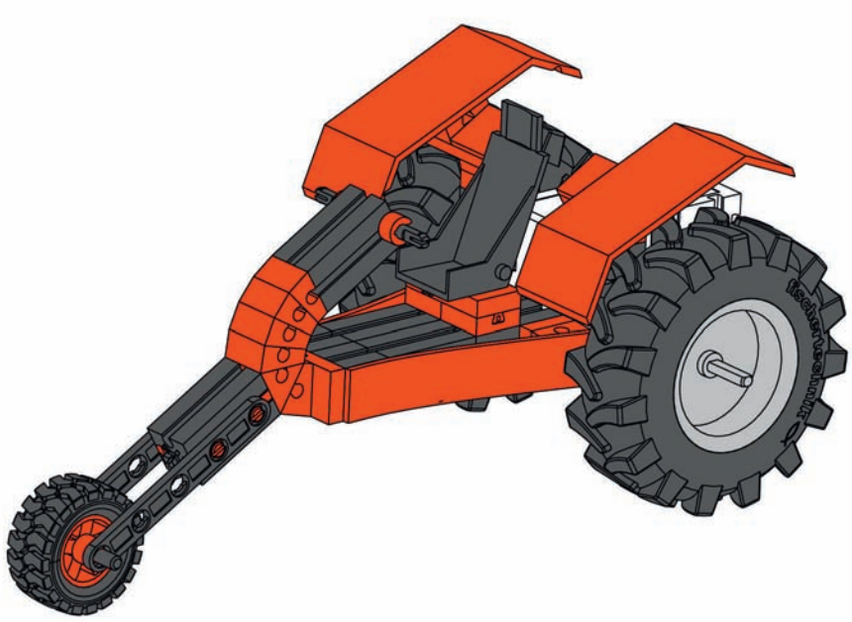

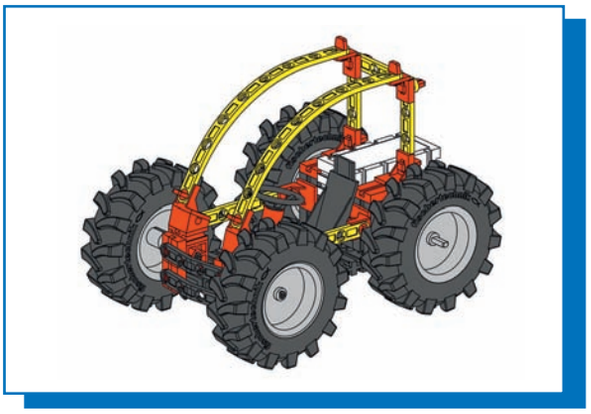

Buggy mit Rückzugsmotor
Buggy with pullback motor
Buggy à moteur à ressort

Buggy met terugtrekmotor
Buggy con motor de retroceso
Buggy com motor de corda

Buggy con motore a carica
Багги с возвратным двигателем
配回力马达的沙漠赛车

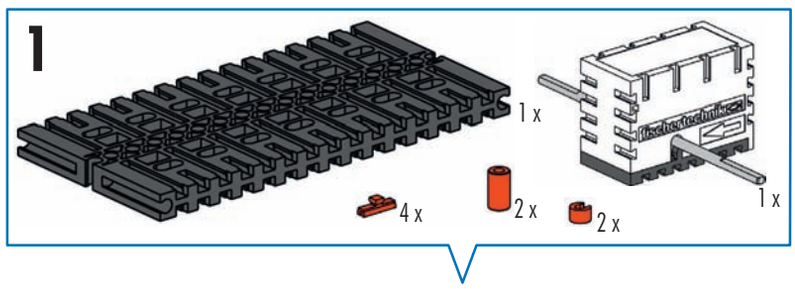

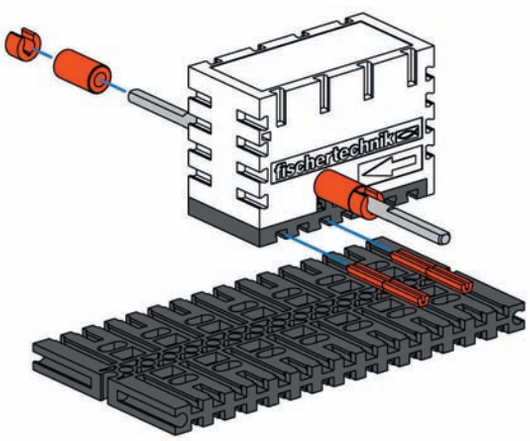

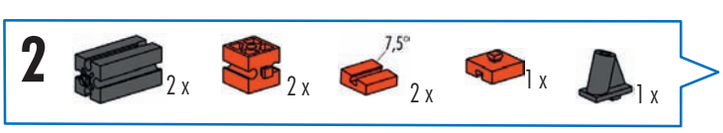

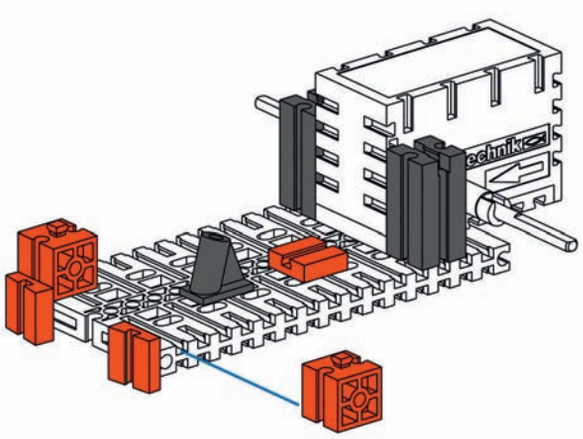

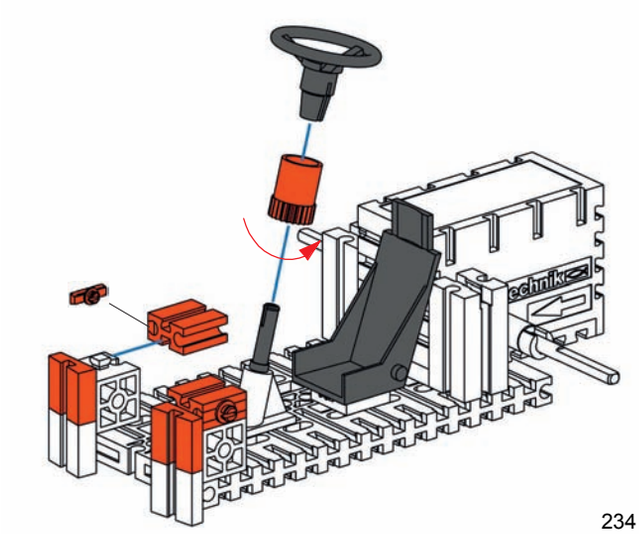

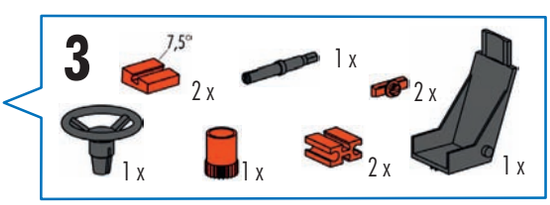

2 x

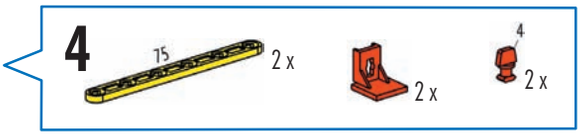
4
75
2 x
2 x
4
2 x

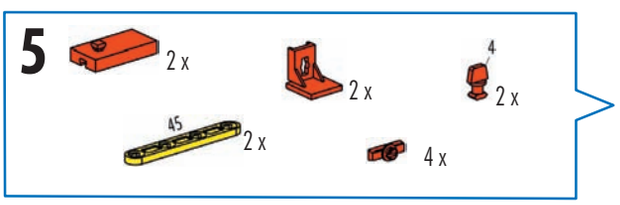
5
2 x
2 x
4
2 x
45
2 x
4 x

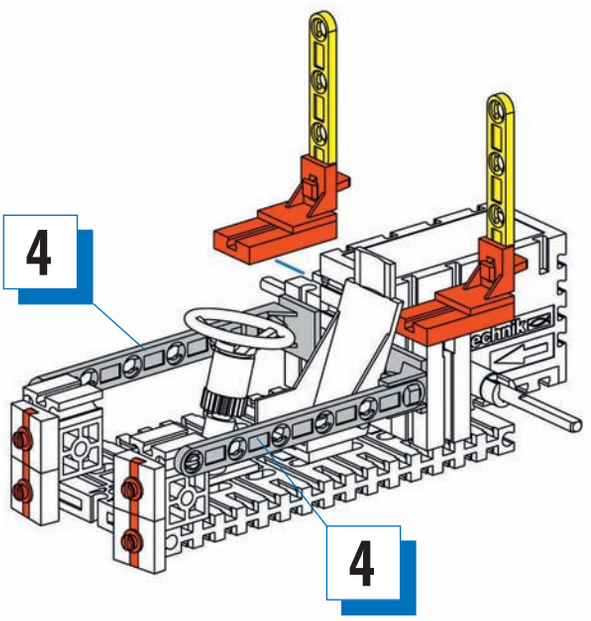
4
4

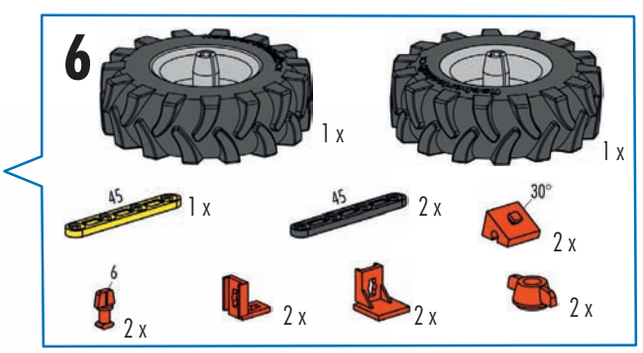
6
1 x
1 x
45
1 x
45
2 x
30°
2 x
6
2 x
2 x
2 x
2 x

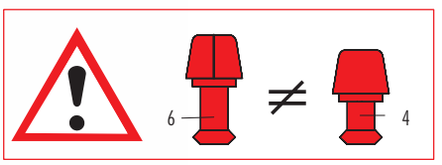
6
≠
4

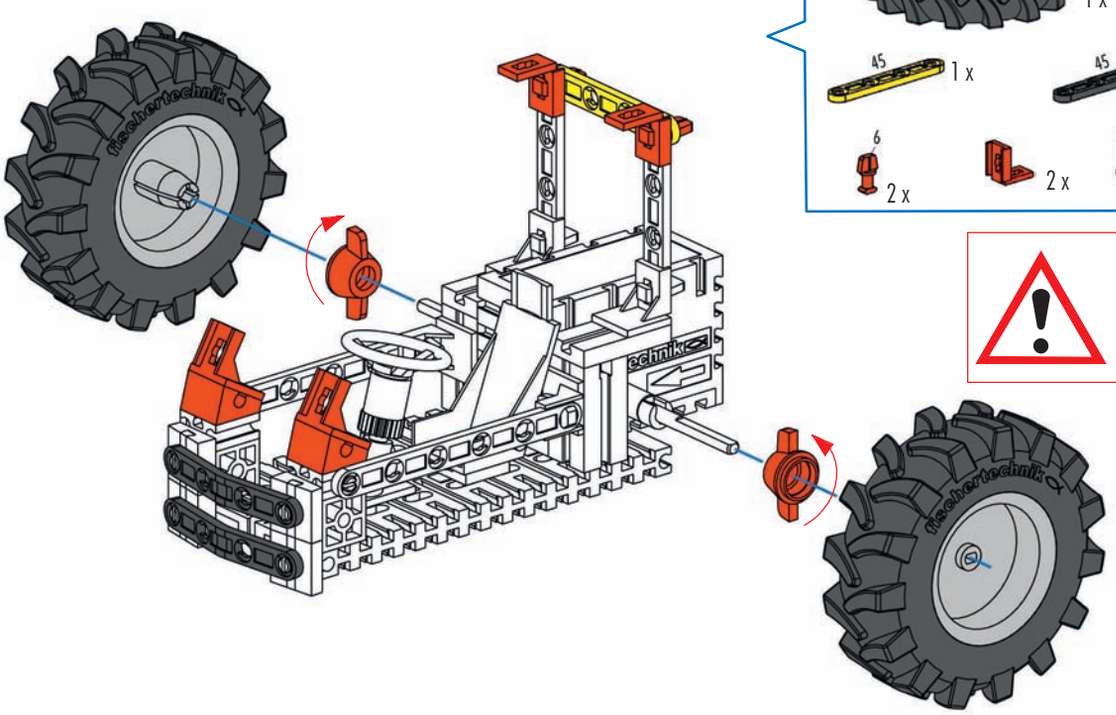

7

1 x

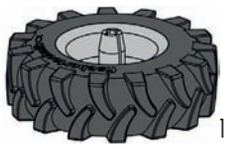
1 x

2 x

2 x

4 x

2 x

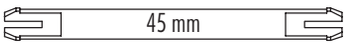

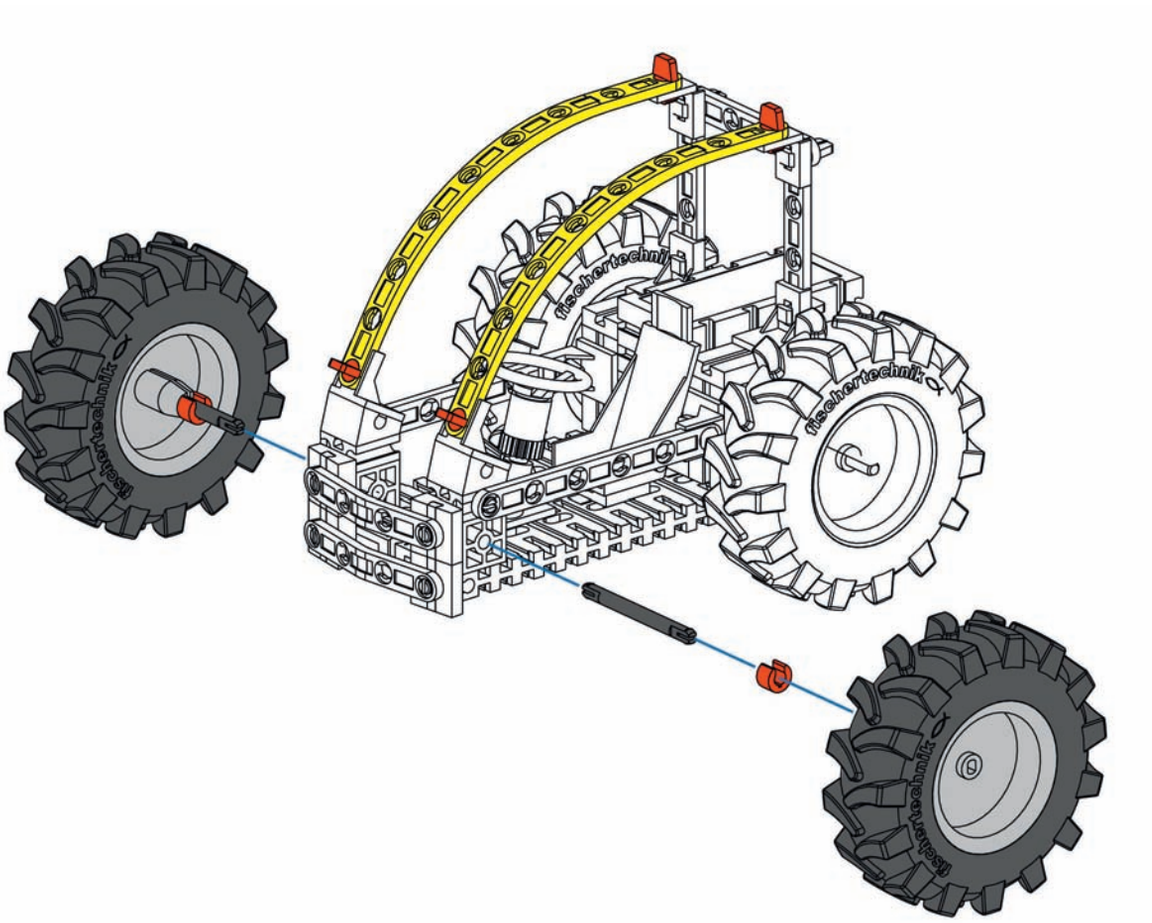

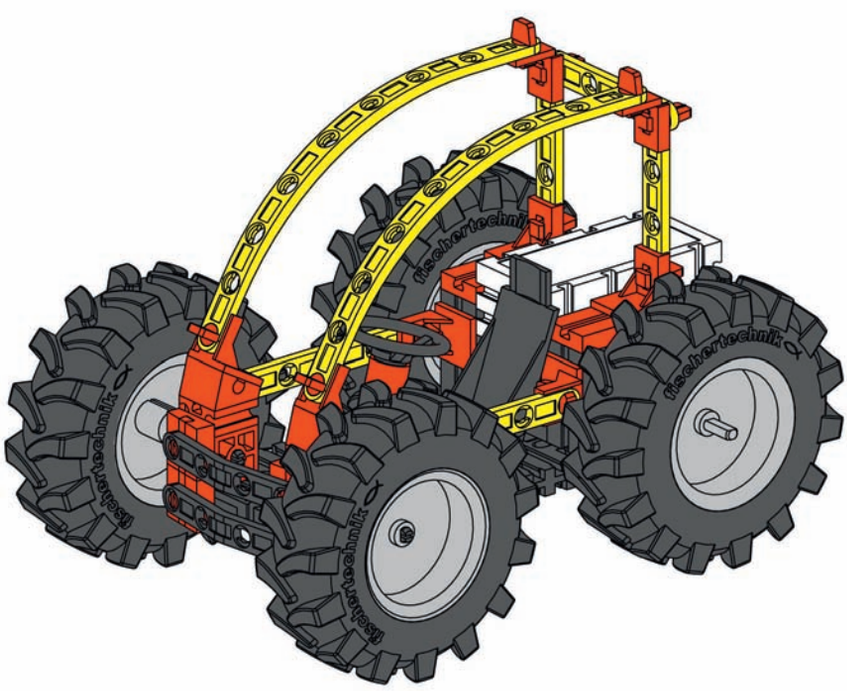

Fahrzeug mit Lenkung
Vehicle with steering
Véhicule à direction

Voertuig met besturing
Vehículo con dirección
Veículo com direção

Veicolo con sterzo
Автомобиль с рулевым управлением
配转向系统的车辆

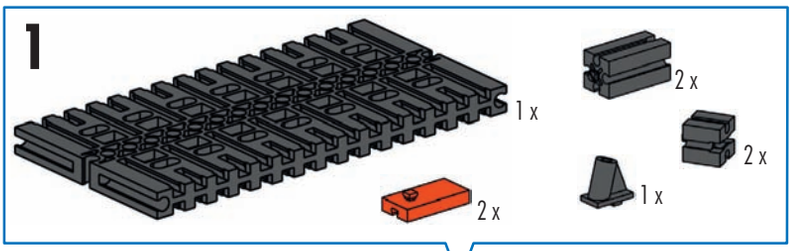

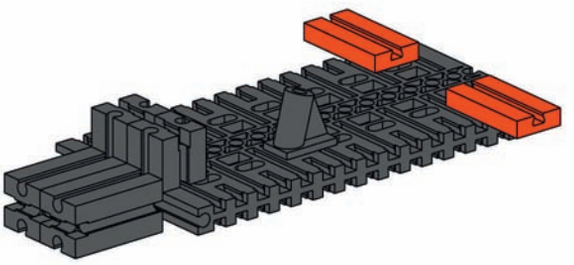

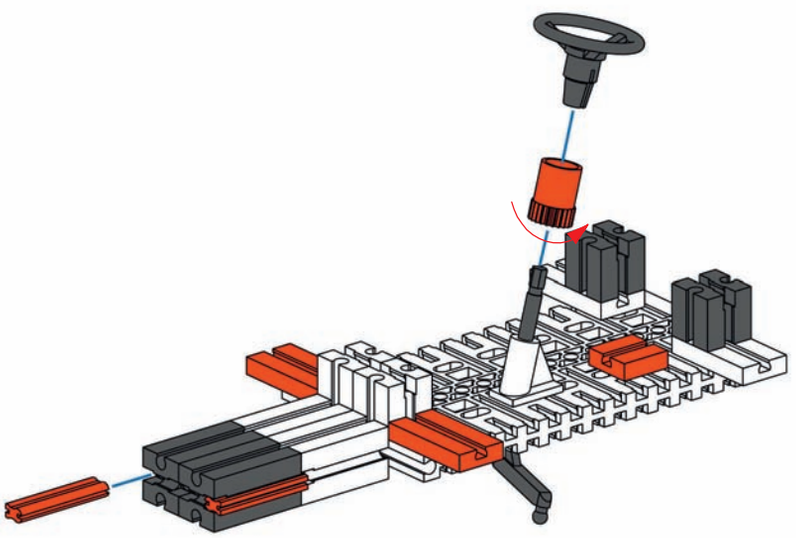

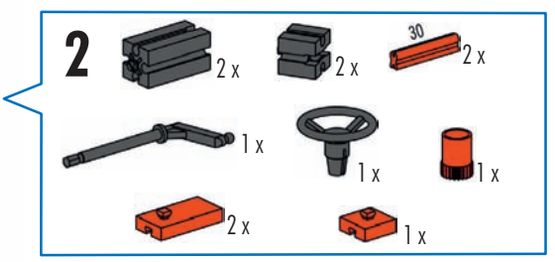

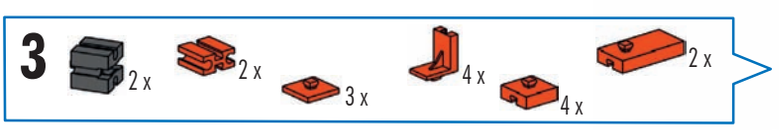

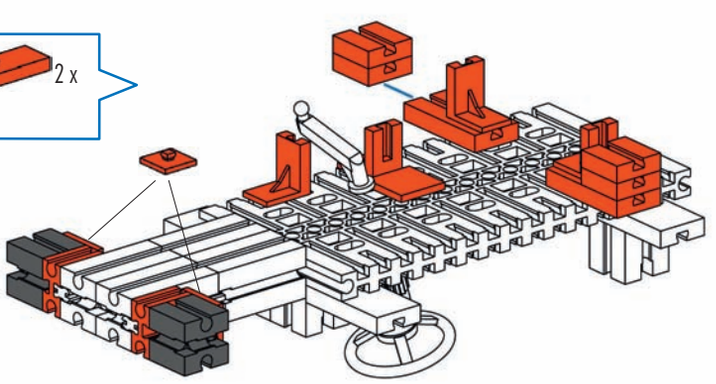

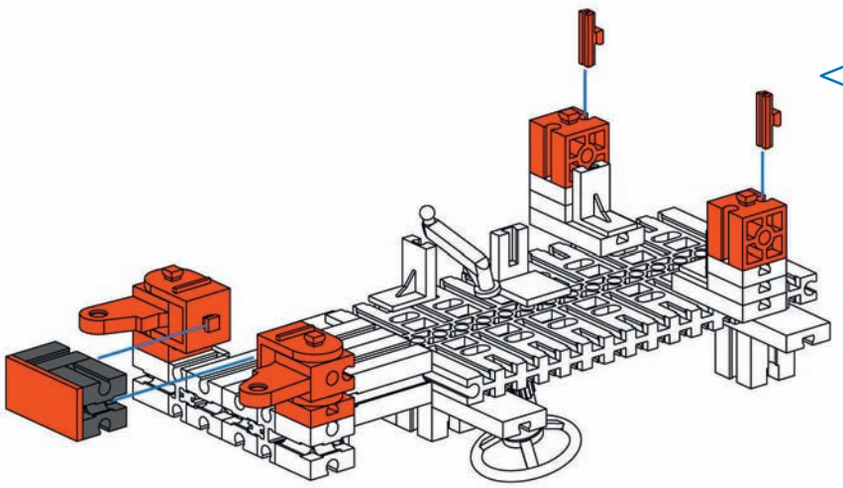

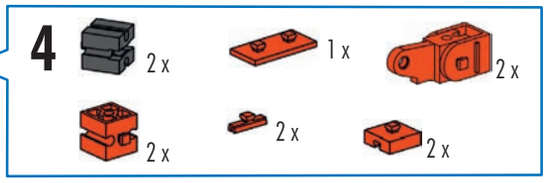
4
2 x
1 x
2 x
2 x
2 x
2 x

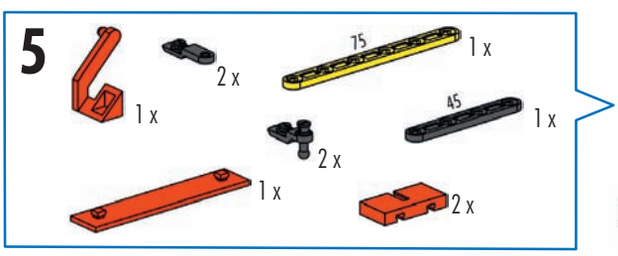
5
2 x
75
1 x
1 x
45
1 x
2 x
1 x
2 x

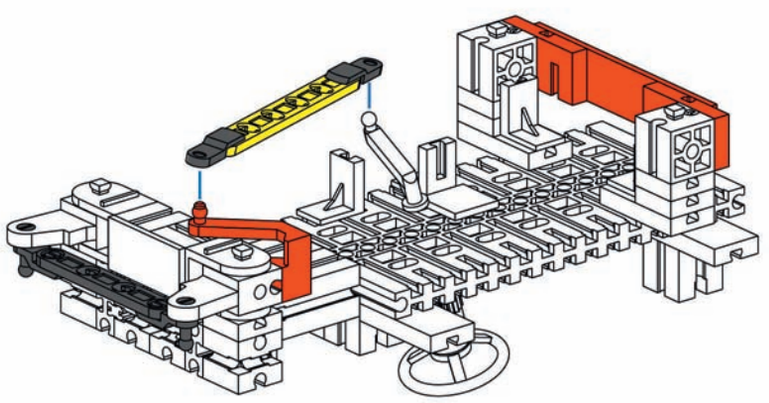

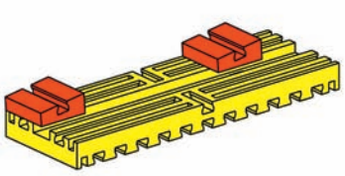

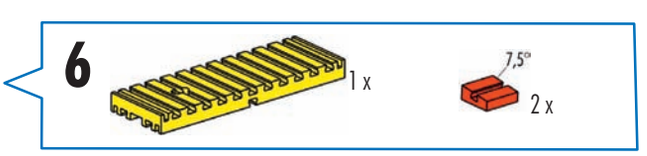
6
1 x
7,5°
2 x

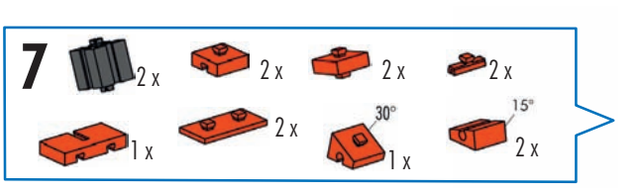
7
2 x
2 x
2 x
2 x
1 x
2 x
30°
1 x
15°
2 x

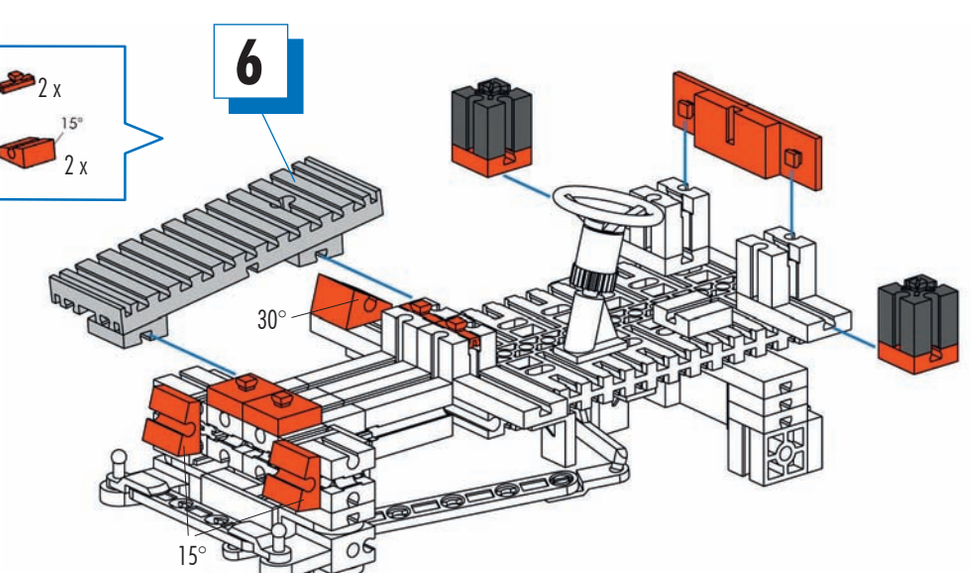
6
30°
15°

238

8

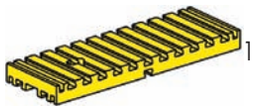
1 x

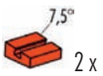
7,5°
2 x

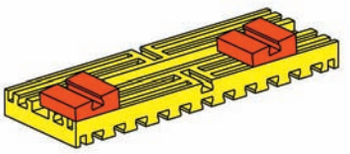

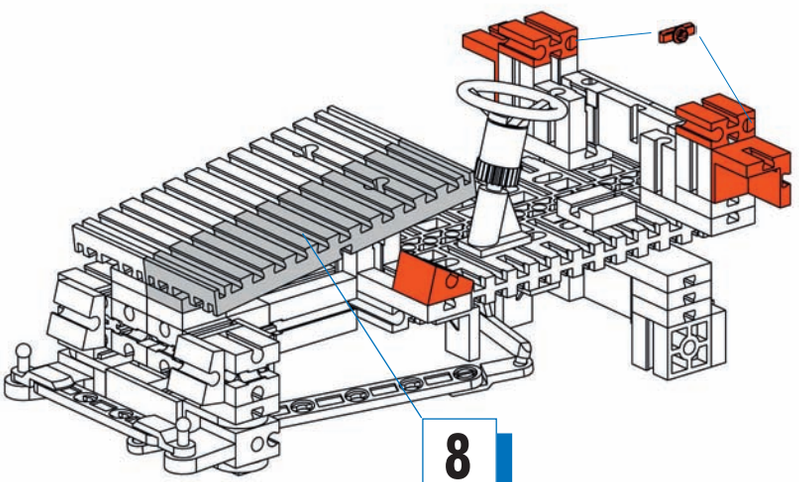
8

9

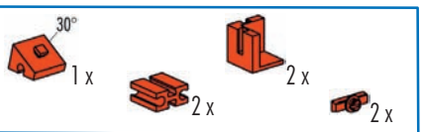
30°
1 x
2 x
2 x
2 x

10

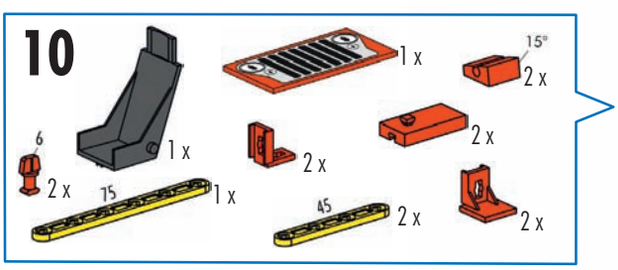
1 x
1 x
15°
2 x
6
2 x
2 x
2 x
75
1 x
45
2 x
2 x

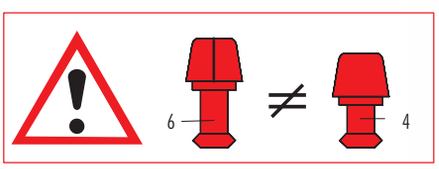
6
≠
4

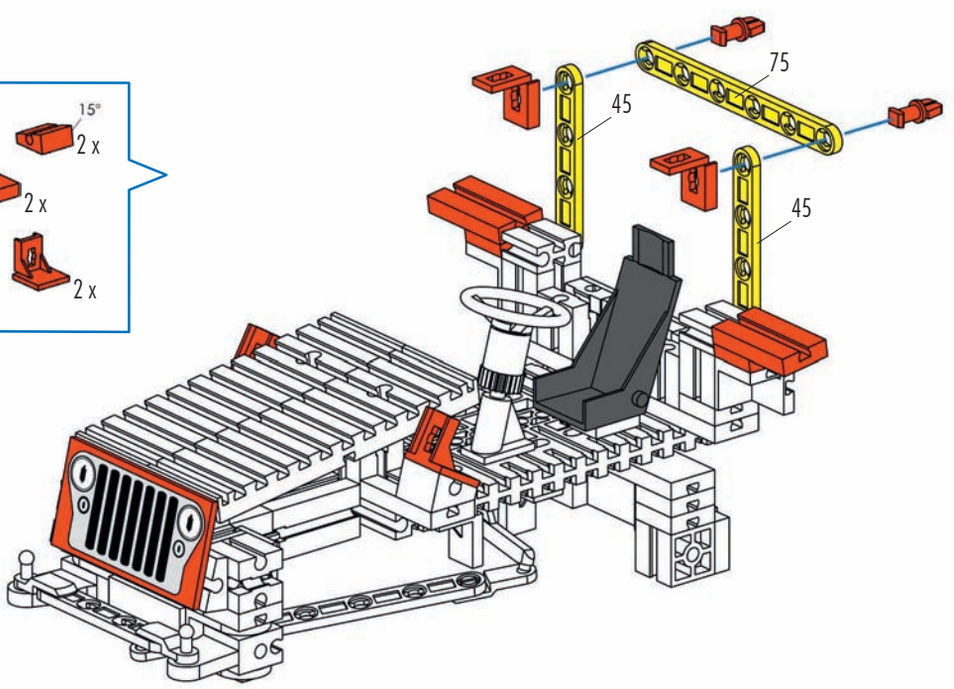
75
45
45

11

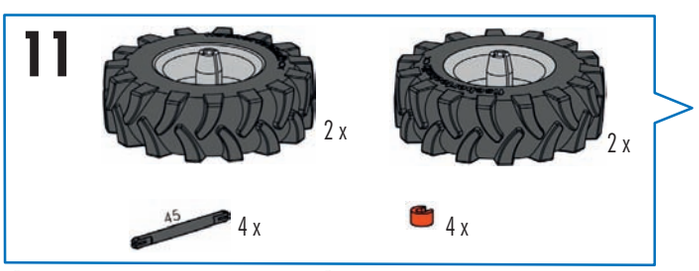
2 x
2 x
A5
4 x
4 x

45 mm

4 x

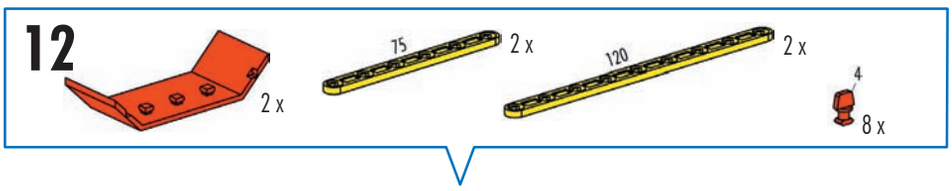
12
2 x
75
2 x
120
2 x
4
8 x

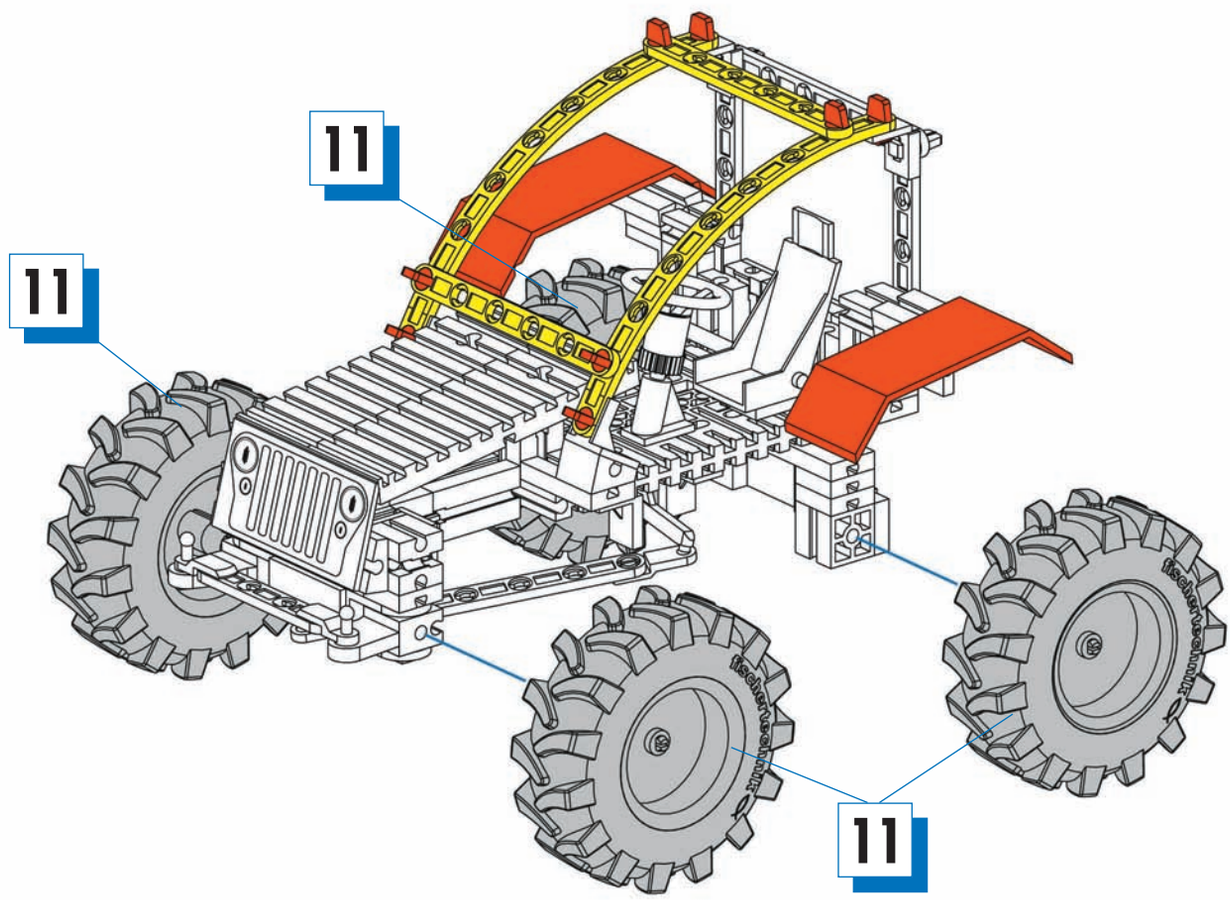
11
11
11

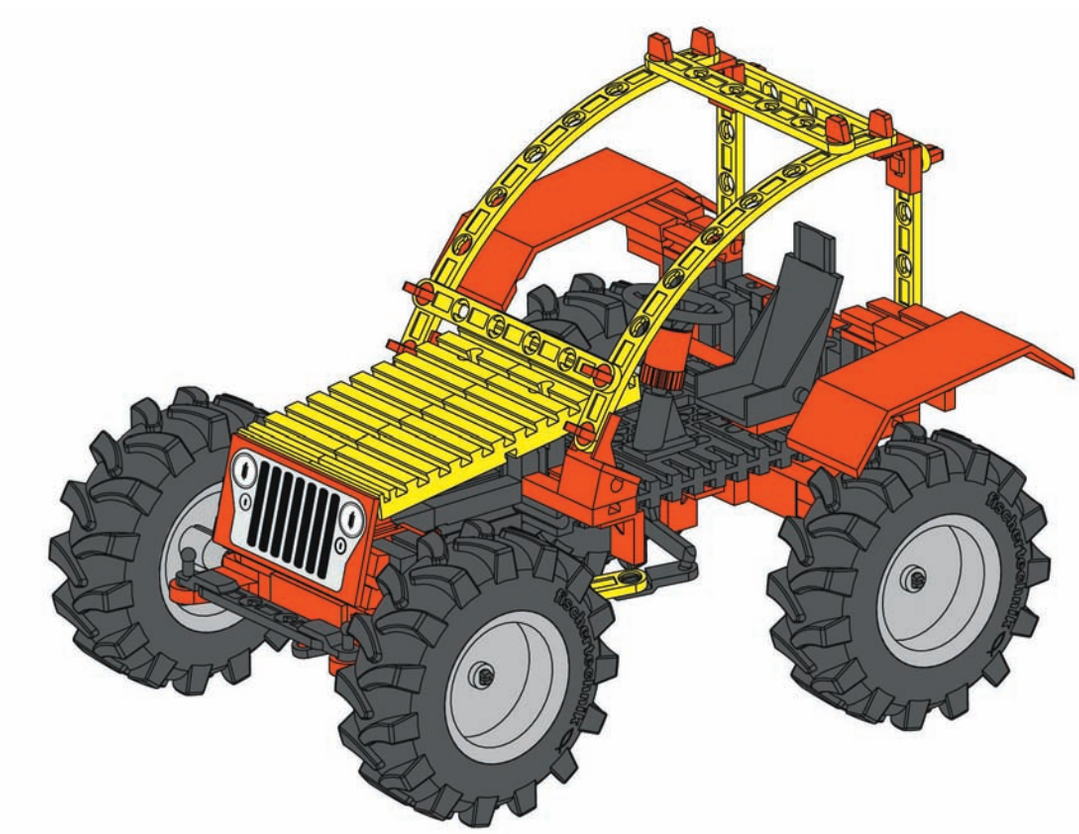

Offroader mit Lenkung und Federung
Offroad vehicle with steering and spring suspension
Véhicule tout-terrain à direction et suspension
Off-roader met besturing en vering
Todoterreno con dirección y suspensión
Veículo offroad com direção e suspensão de molas
Fuoristrada con sterzo e sospensioni
Внедорожник с подвеской и рулевым управлением
配转向系统和弹簧减震系统的越野车

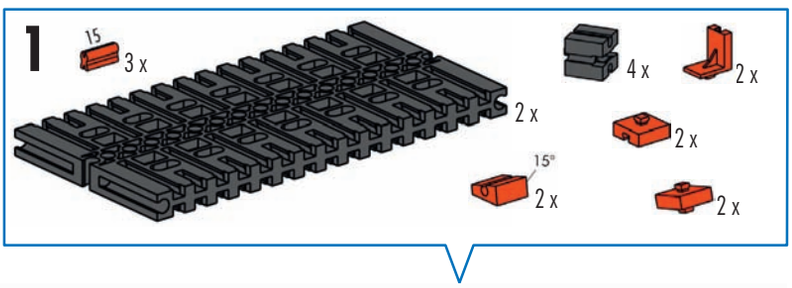

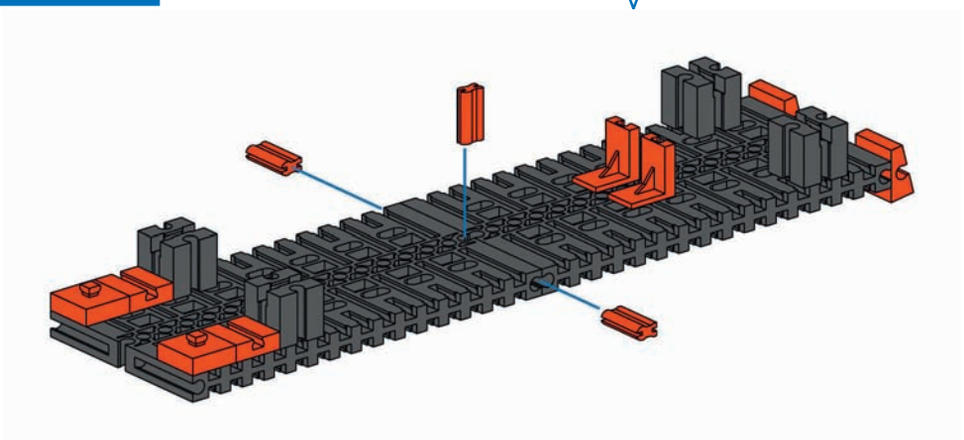

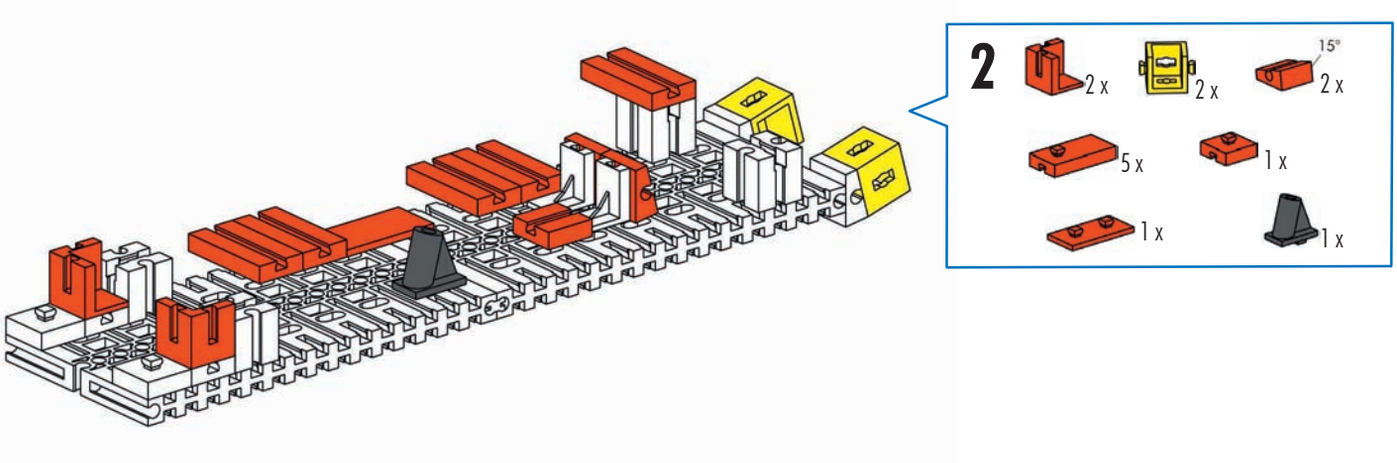

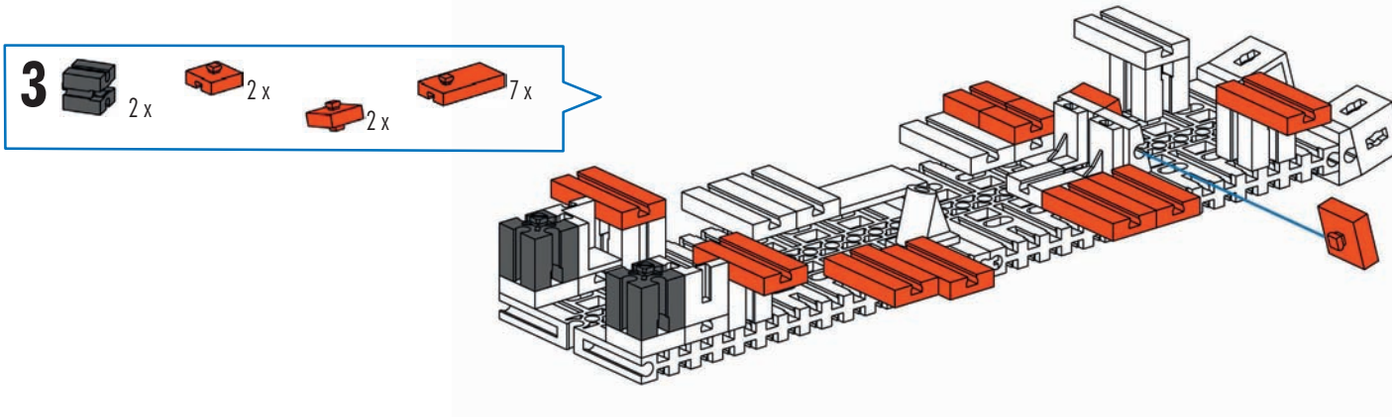

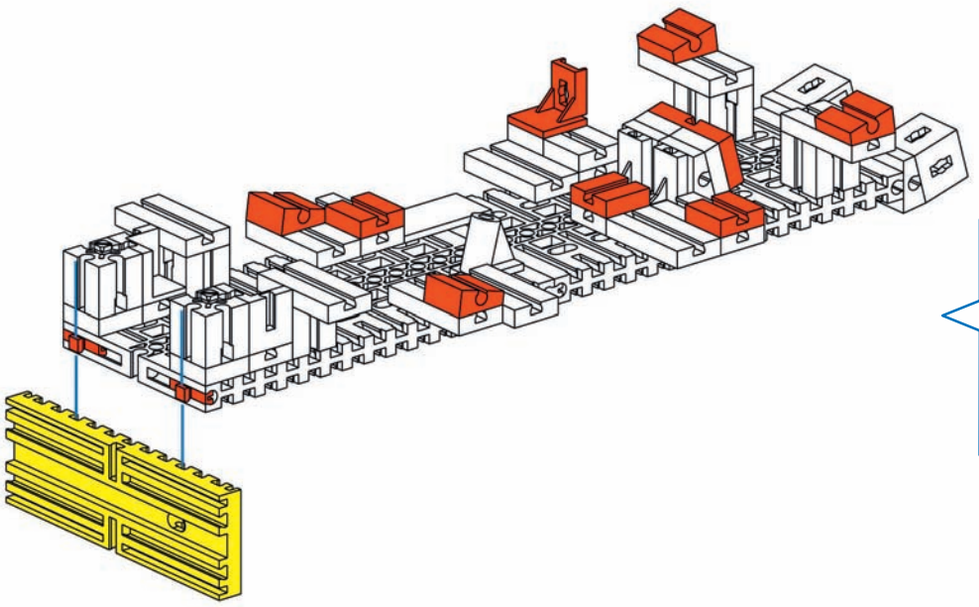

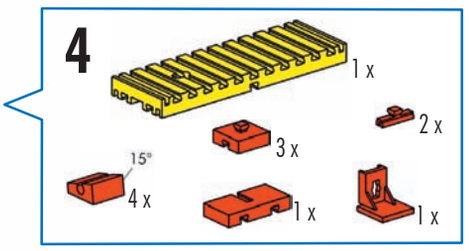
4
1 x
2 x
3 x
15°
4 x
1 x
1 x

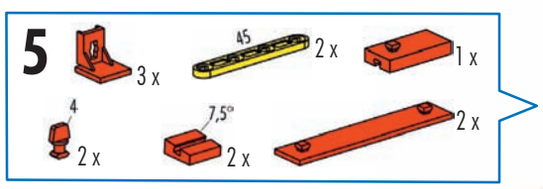
5
3 x
45
2 x
1 x
4
2 x
7,5°
2 x
2 x

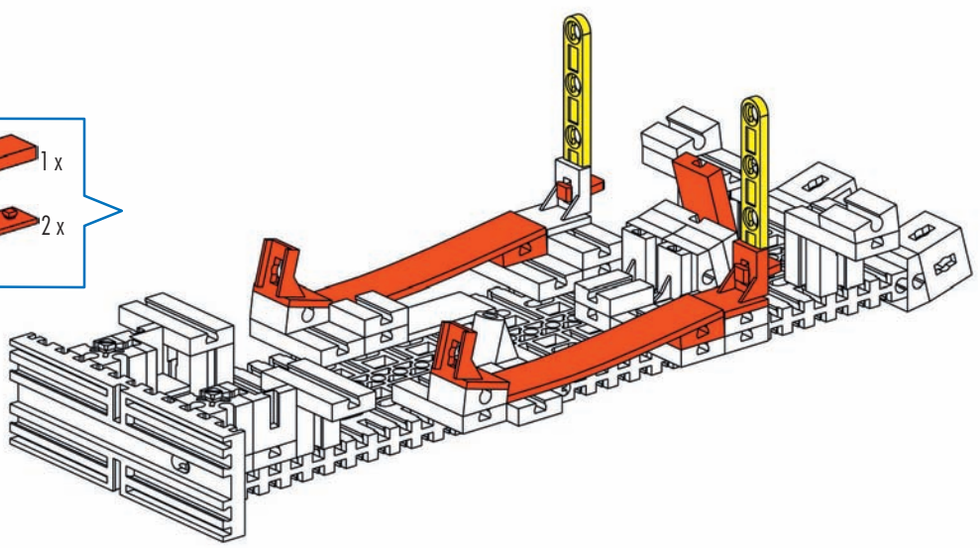

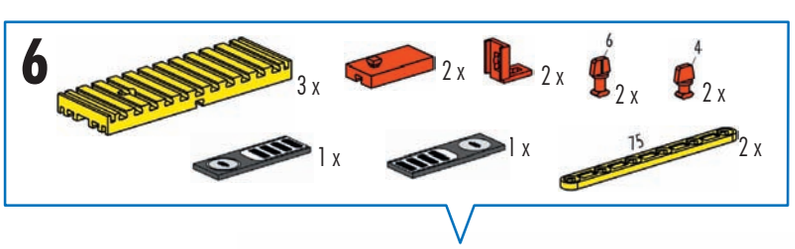
6
3 x
2 x
2 x
6
2 x
4
2 x
1 x
1 x
75
2 x

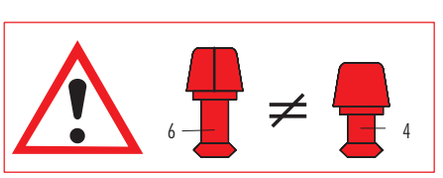
6
≠
4

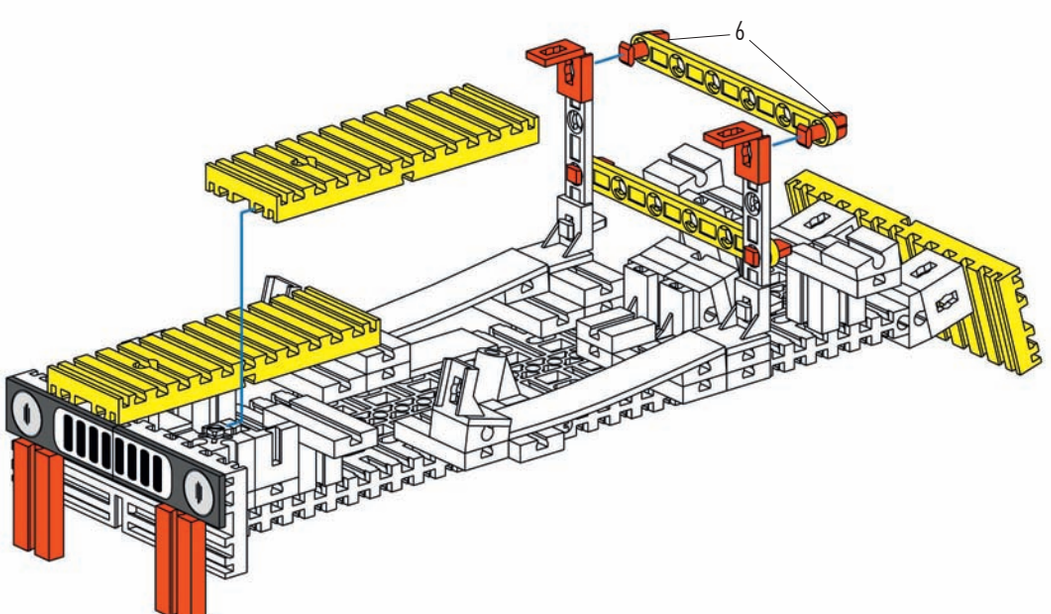
6

7

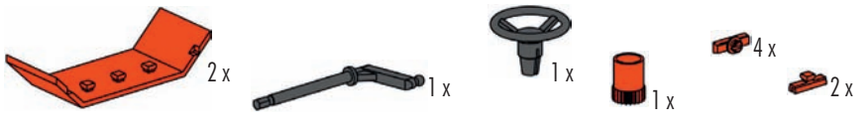

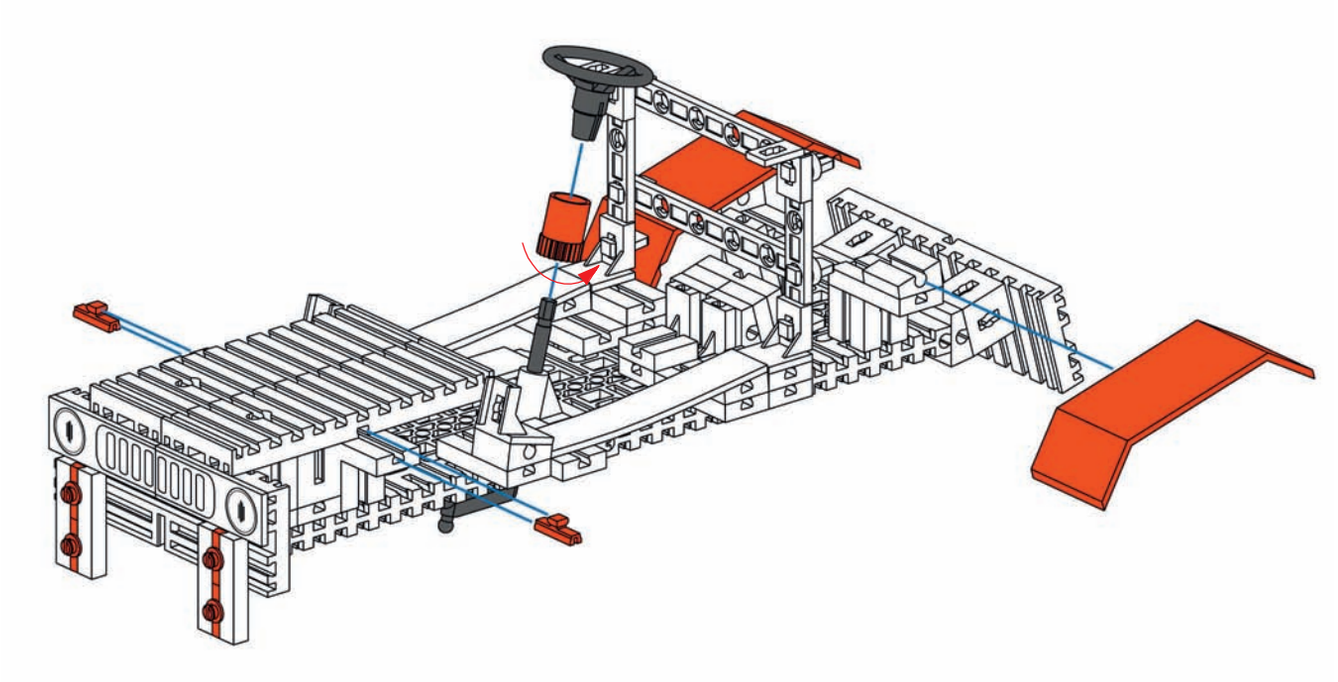

8

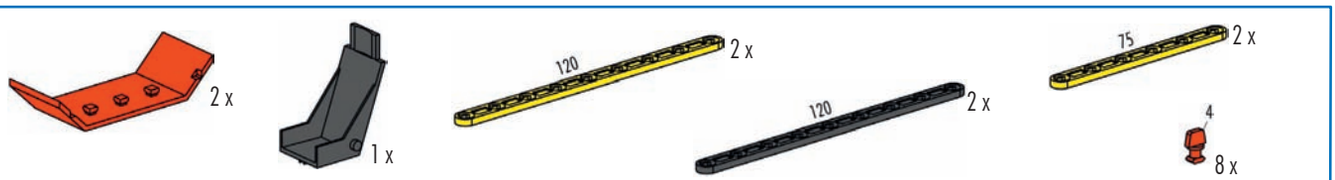

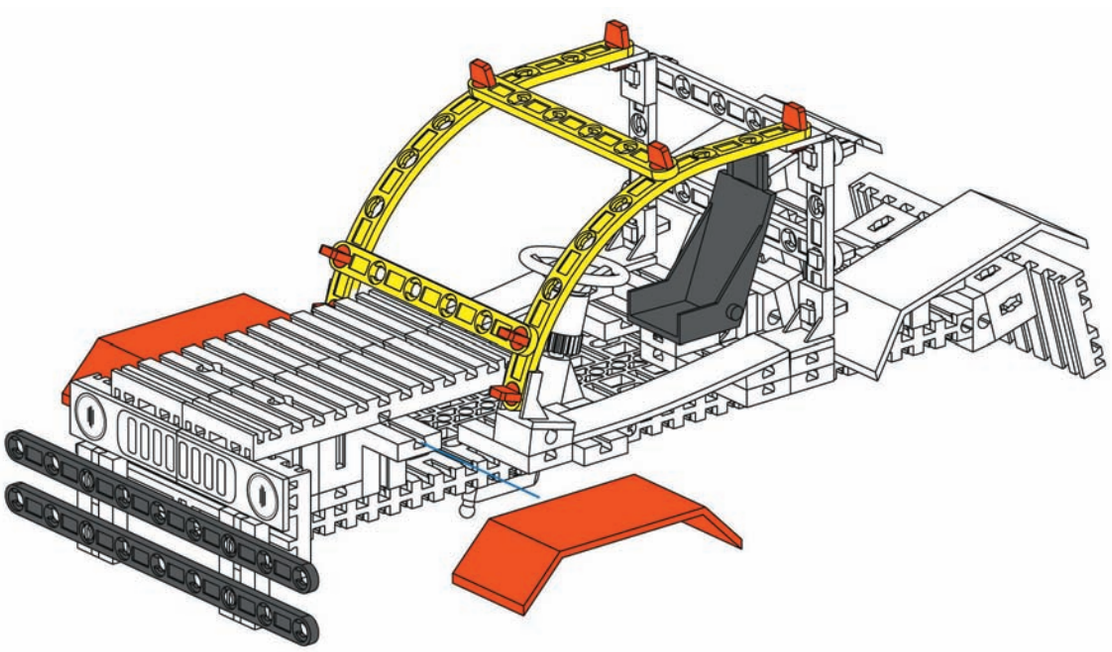

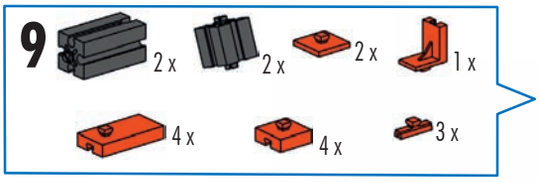
9
2 x
2 x
2 x
1 x
4 x
4 x
3 x

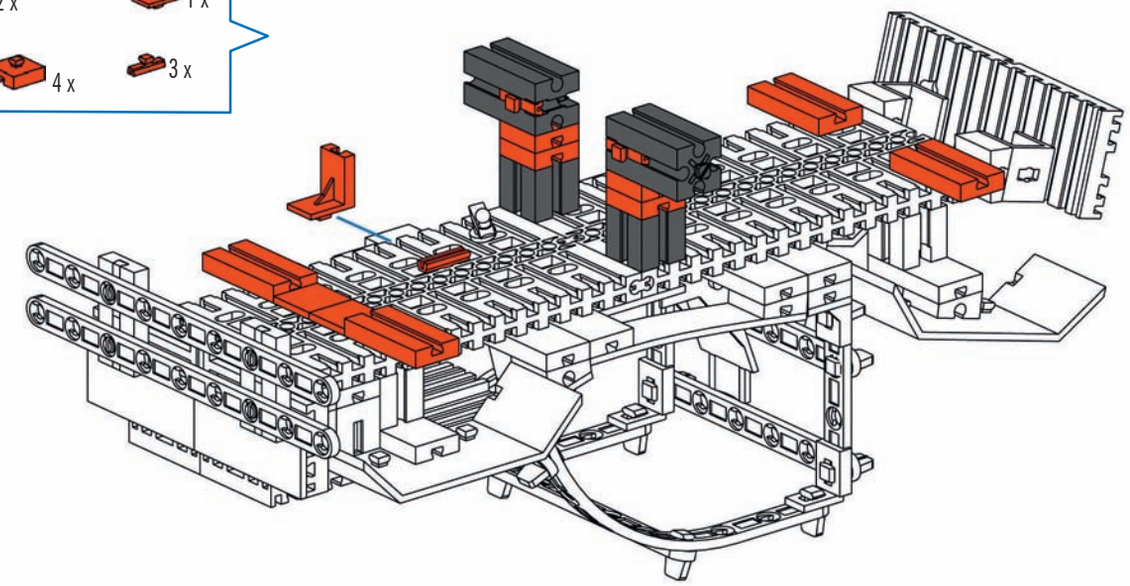

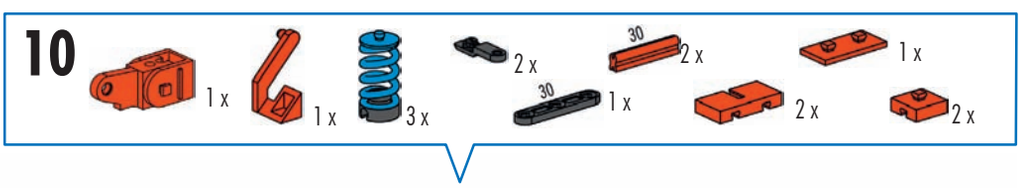
10
1 x
1 x
3 x
2 x
30
2 x
30
1 x
1 x
2 x
2 x

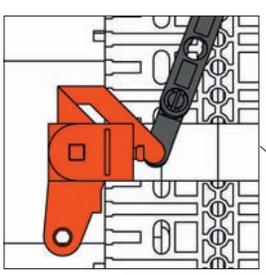

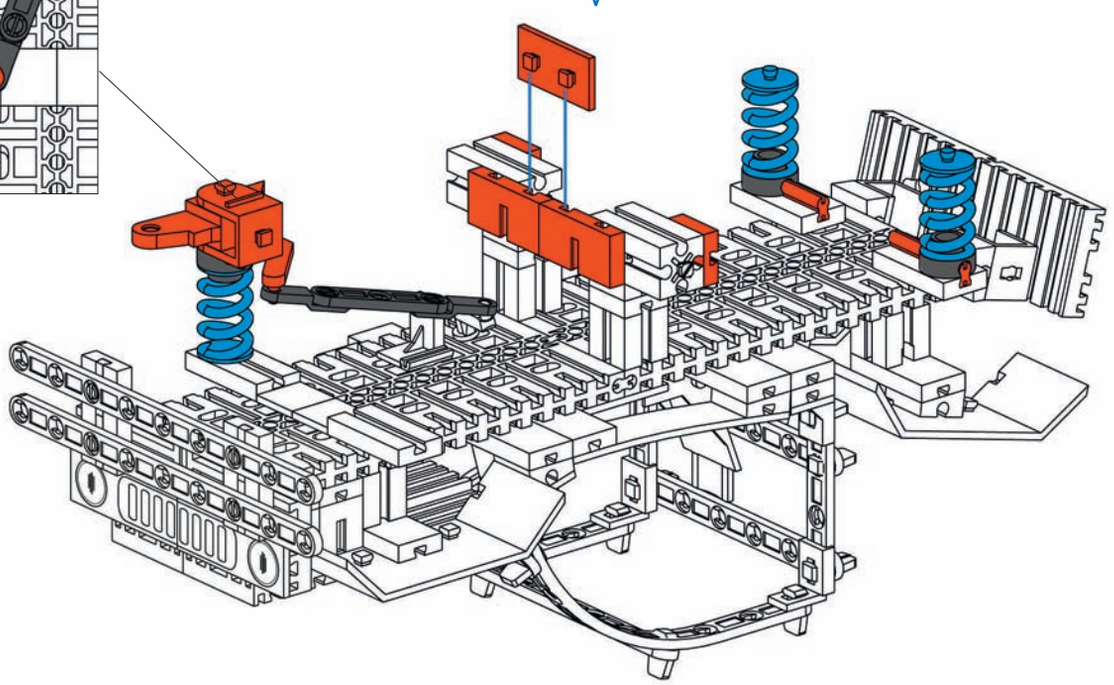

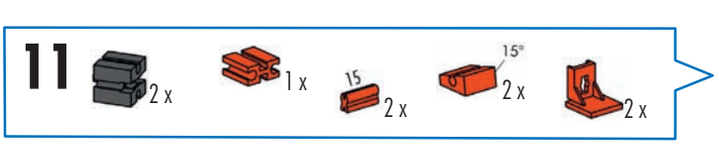
11
2 x
1 x
15
2 x
15°
2 x
2 x

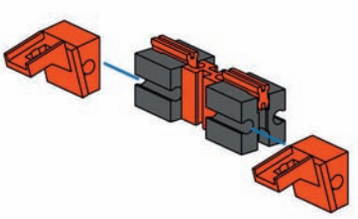

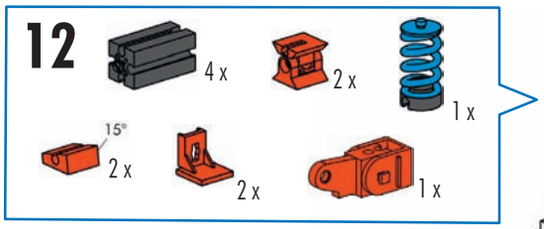
12
4 x
2 x
1 x
15°
2 x
2 x
1 x

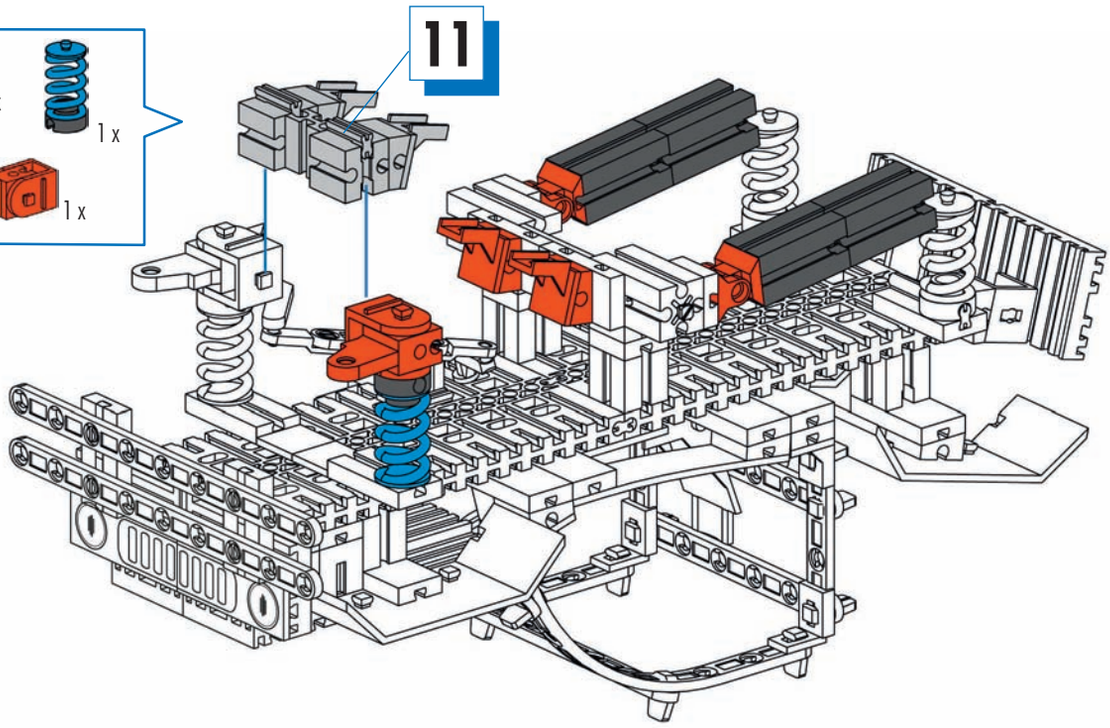
11

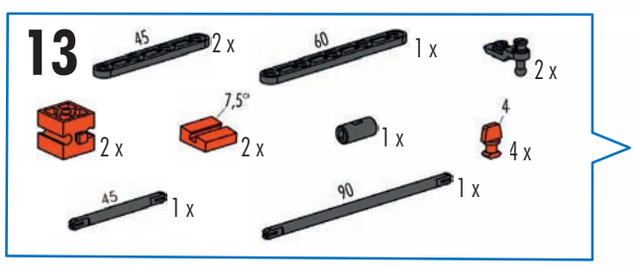
13
45
2 x
60
1 x
2 x
2 x
7,5°
2 x
1 x
4
4 x
45
1 x
90
1 x

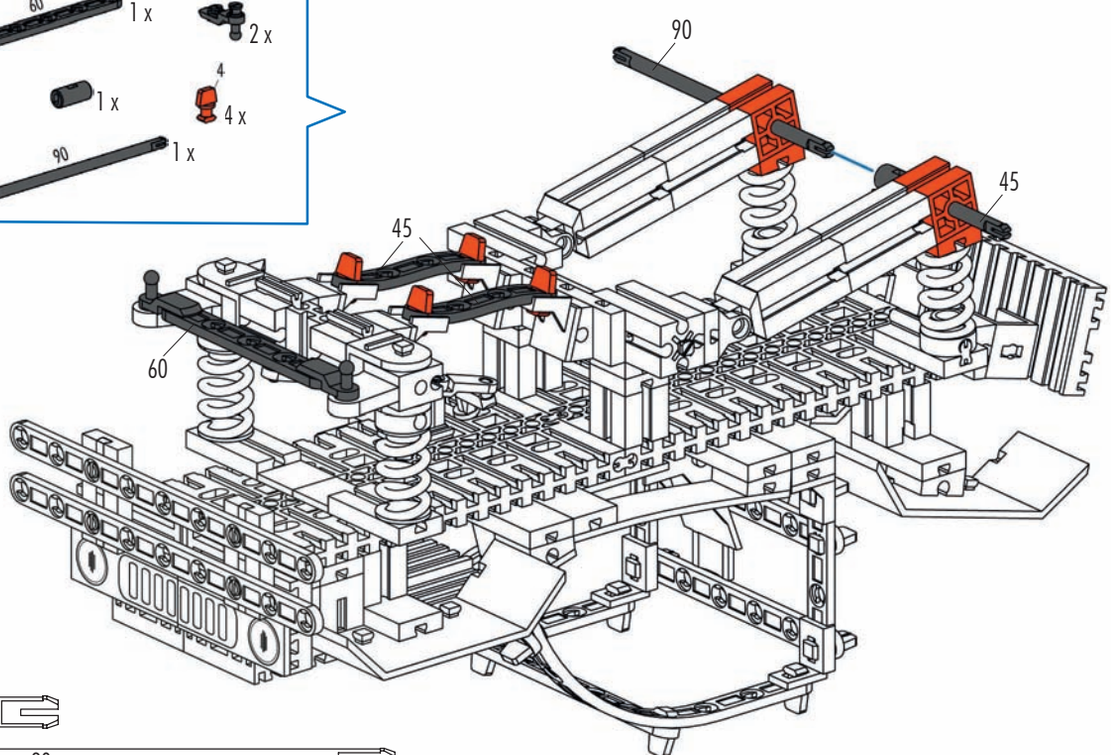
90
45
45
60

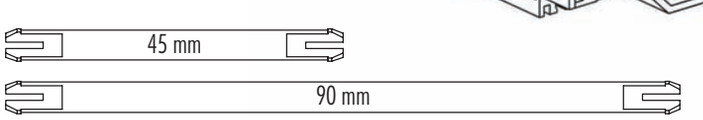
45 mm
90 mm

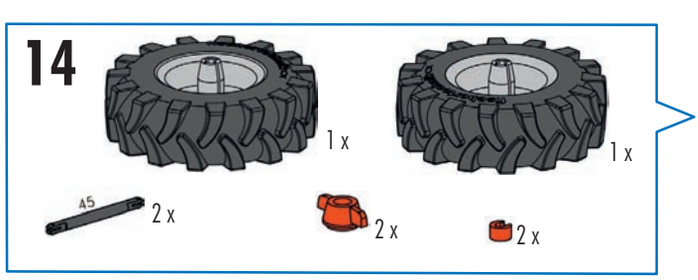
14
1 x
1 x
45
2 x
2 x
2 x

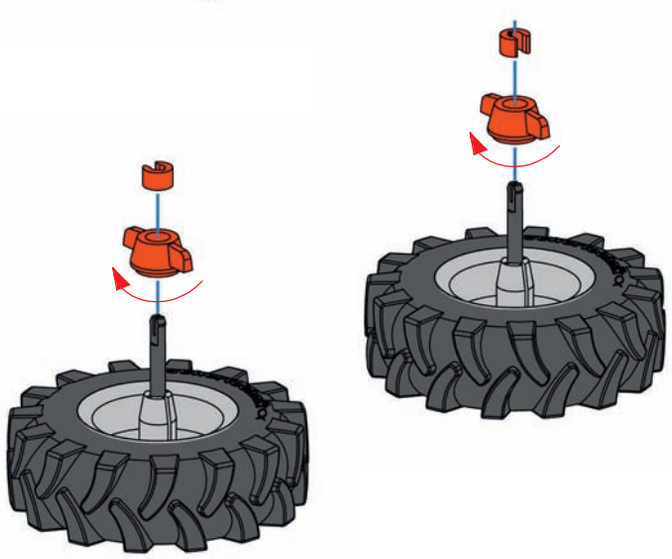

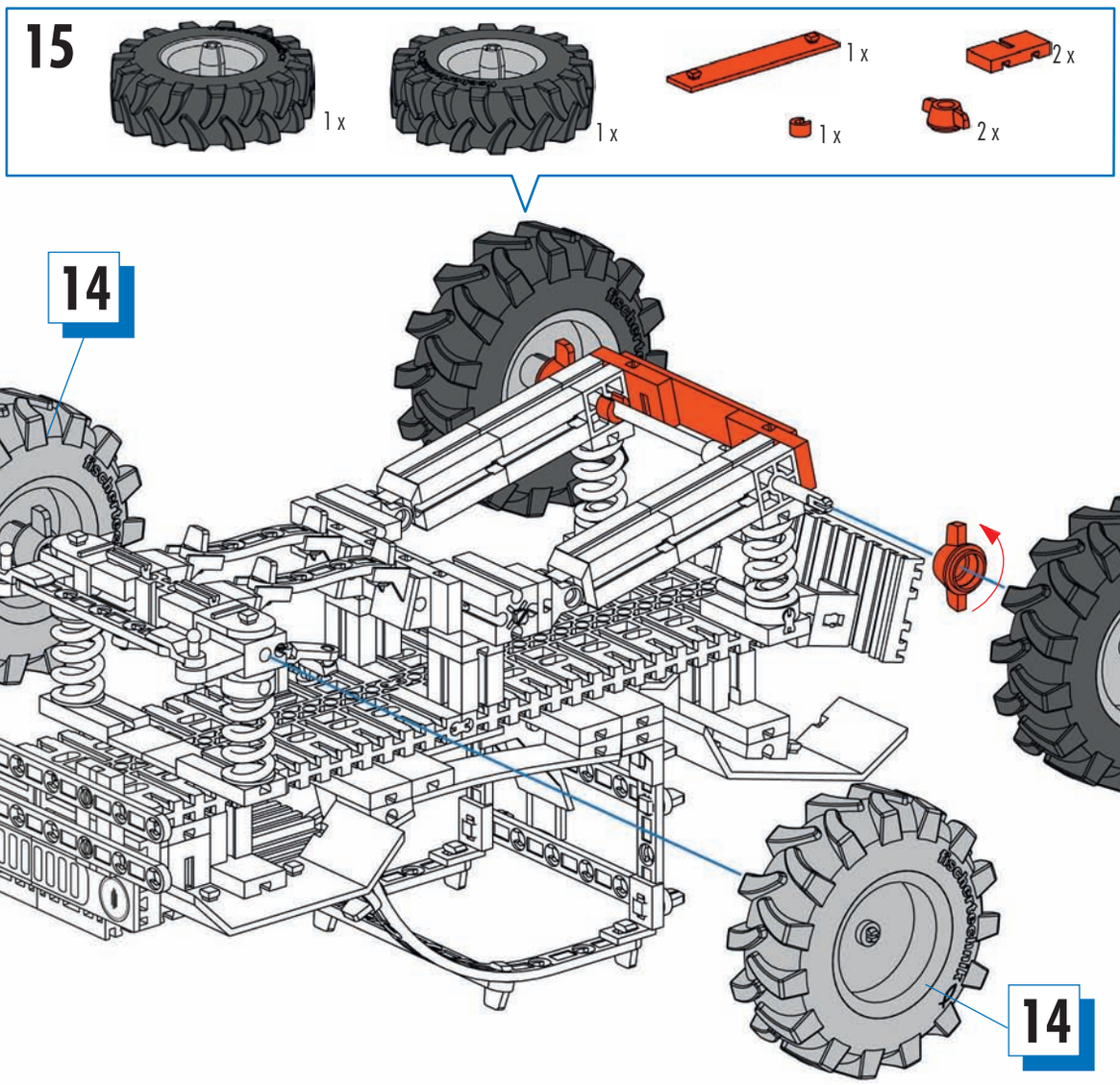
15
1 x
1 x
1 x
2 x
1 x
2 x
14
14

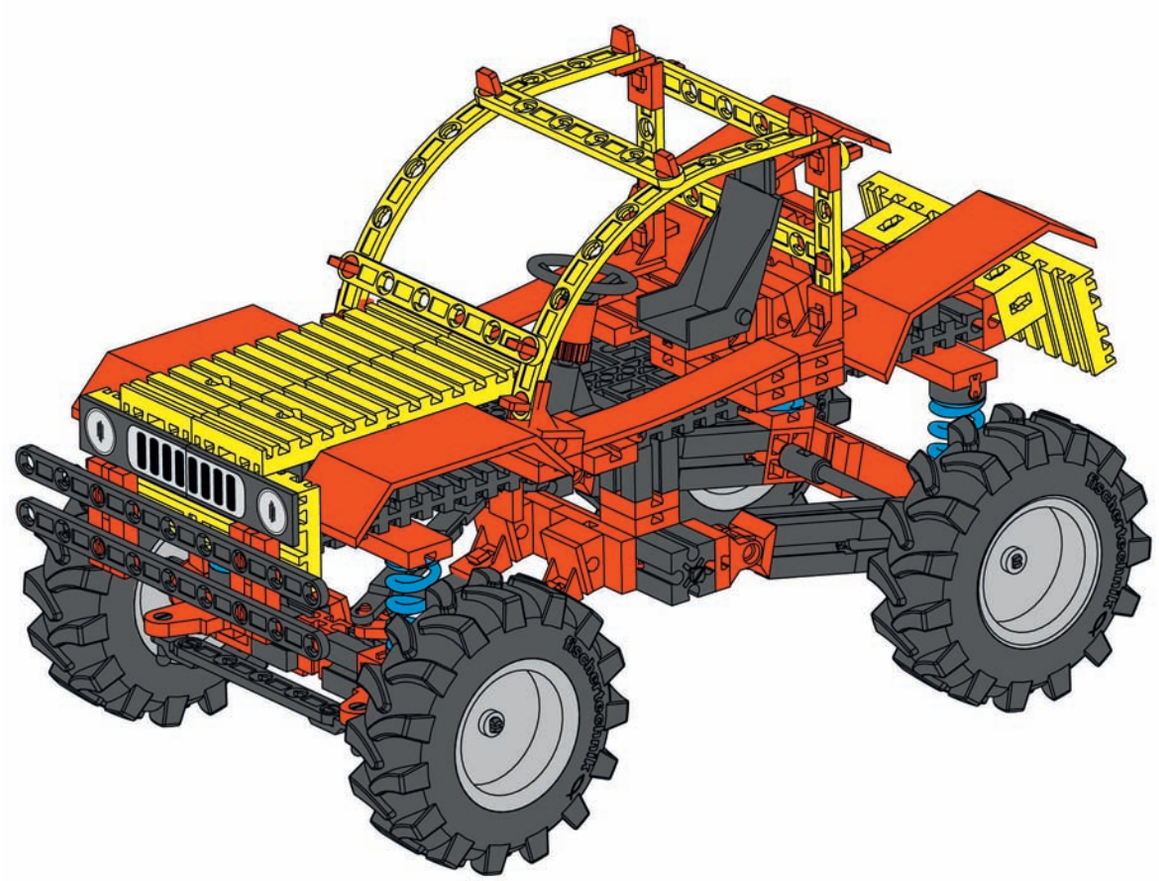

Offroader mit Rückzugsmotor
Offroad vehicle with pullback motor
Véhicule tout-terrain à moteur à ressort

Off-roader met terugtrekmotor
Todoterreno con motor de retroceso
Veículo offroad com motor de corda

Fuoristrada con motore a carica
Внедорожник с возвратным двигателем
配回力马达的越野车

1-10

Seite	28
Page	28
Page	28
Bladzijde	28
Página	28
Pagina	28
Pagina	28
Страница	28
页次	28

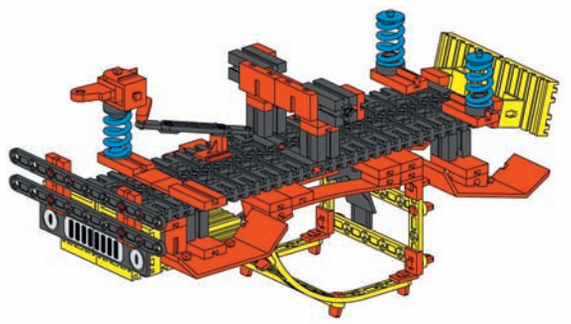

11

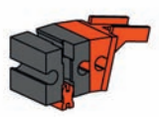

12

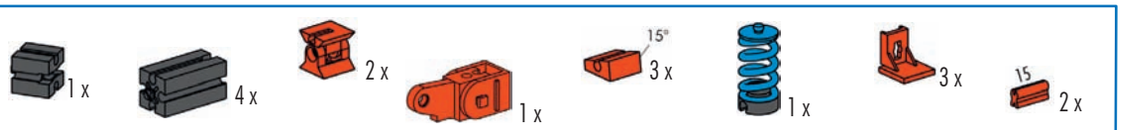

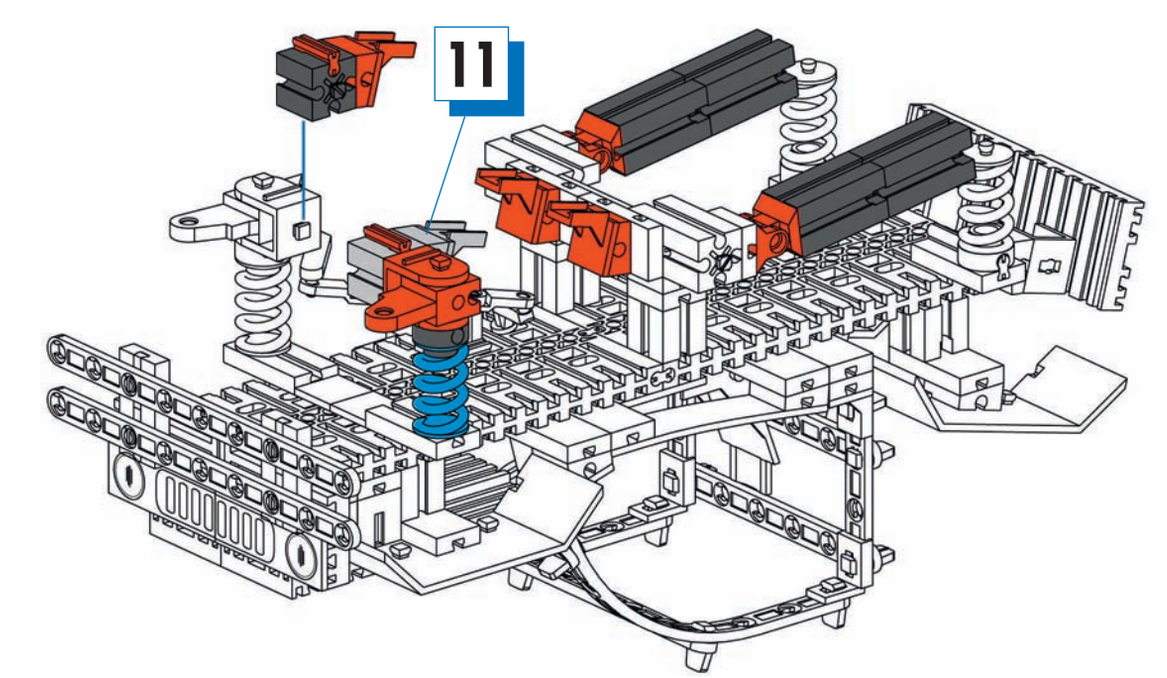

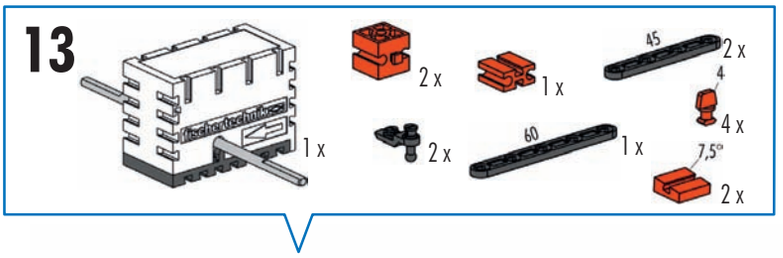
13
1 x
2 x
1 x
45
2 x
4
4 x
2 x
60
1 x
7,5°
2 x

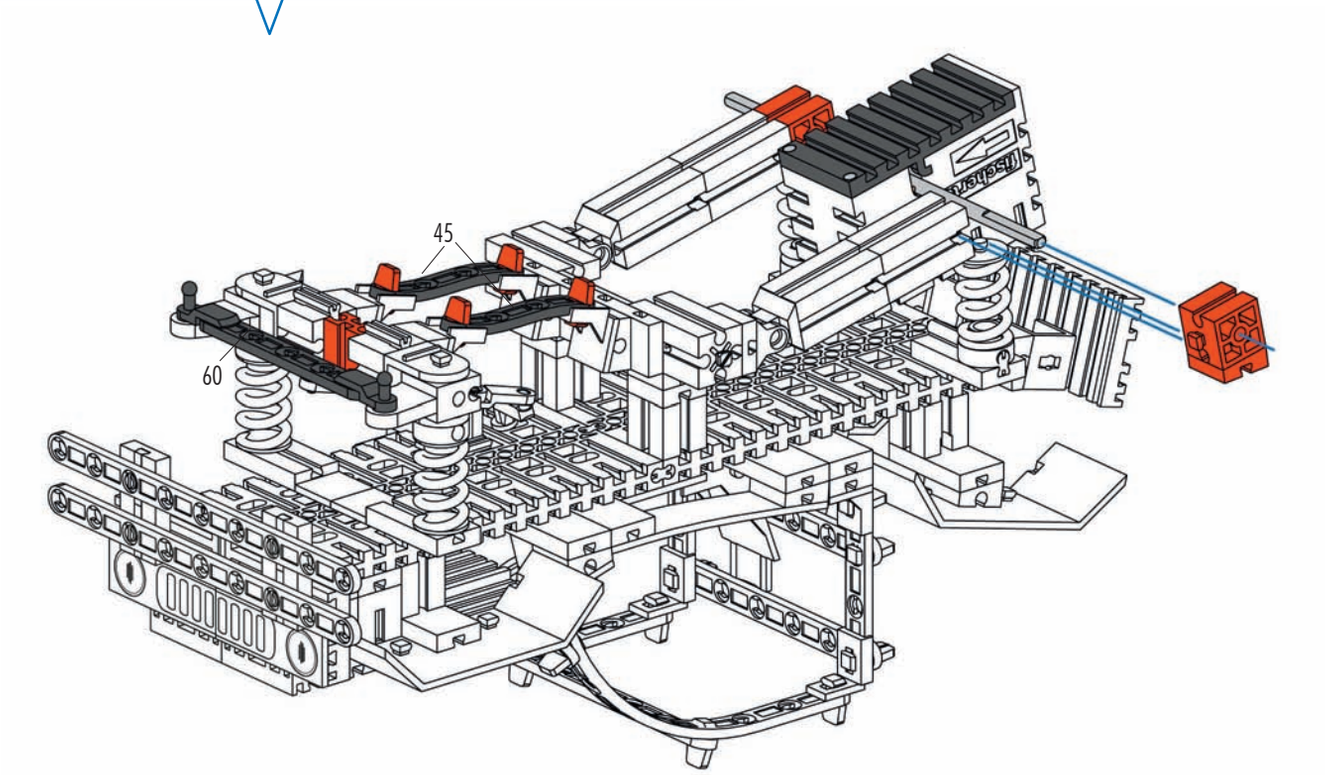
45
60

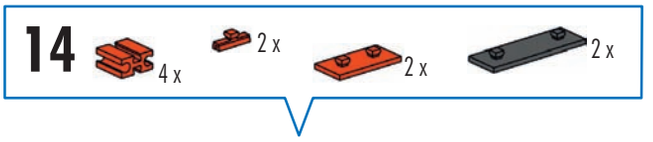
14
4 x
2 x
2 x
2 x

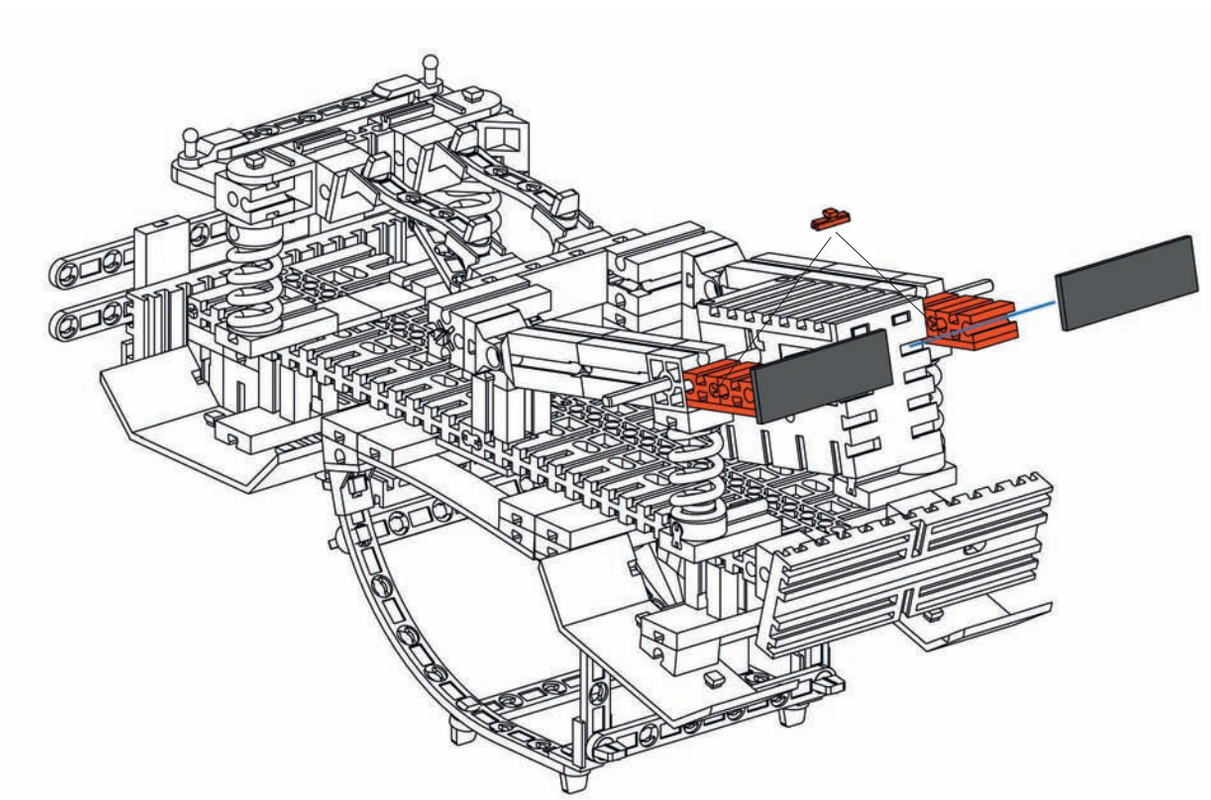

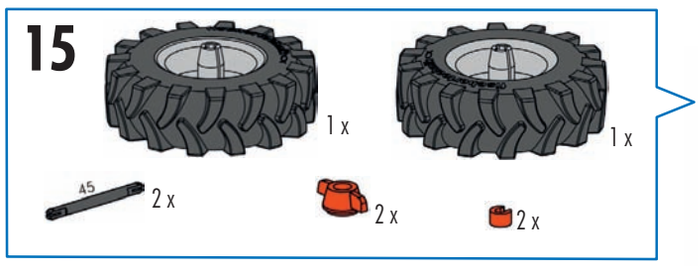
15
1 x
1 x
45
2 x
2 x
2 x

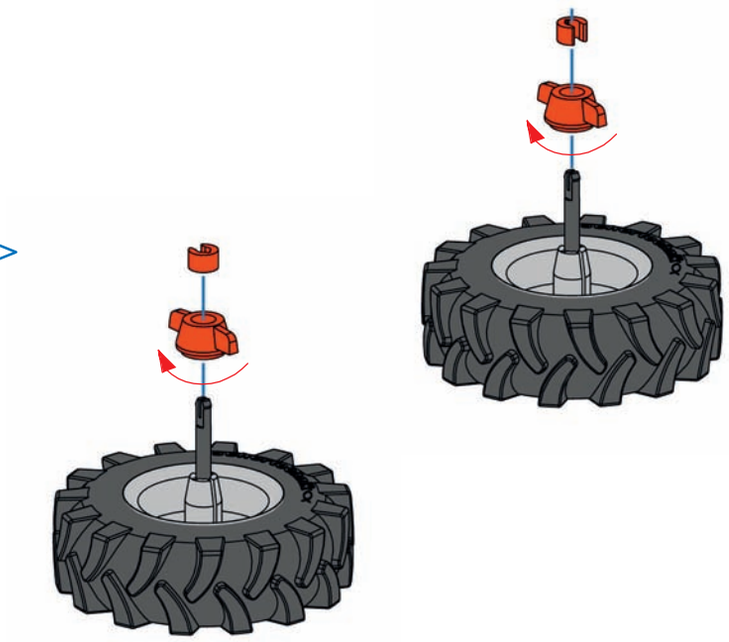

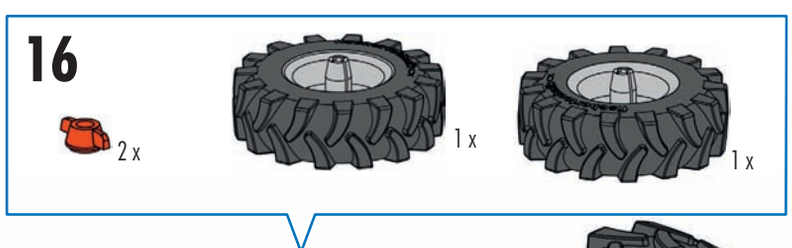
16
2 x
1 x
1 x

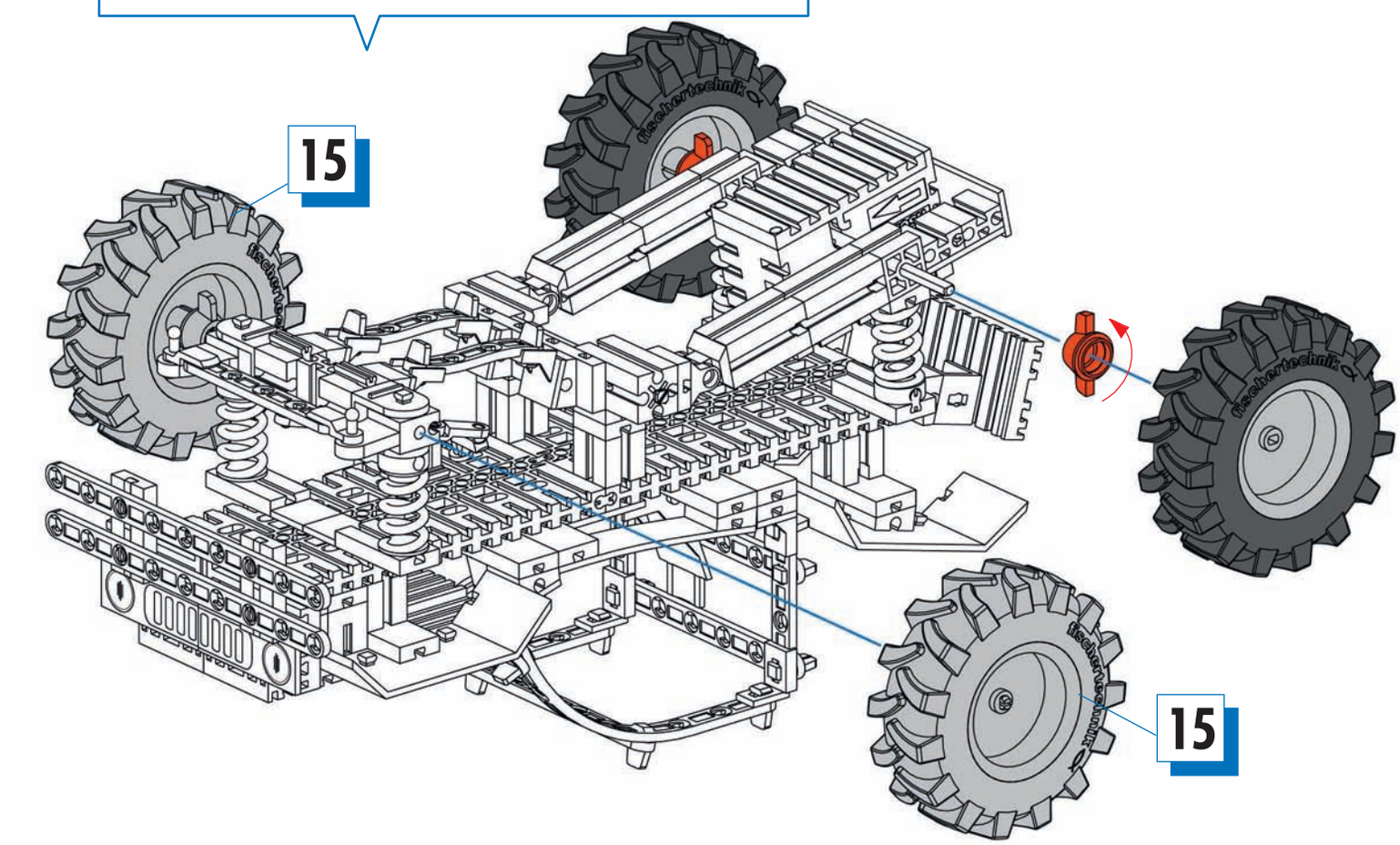
15
15

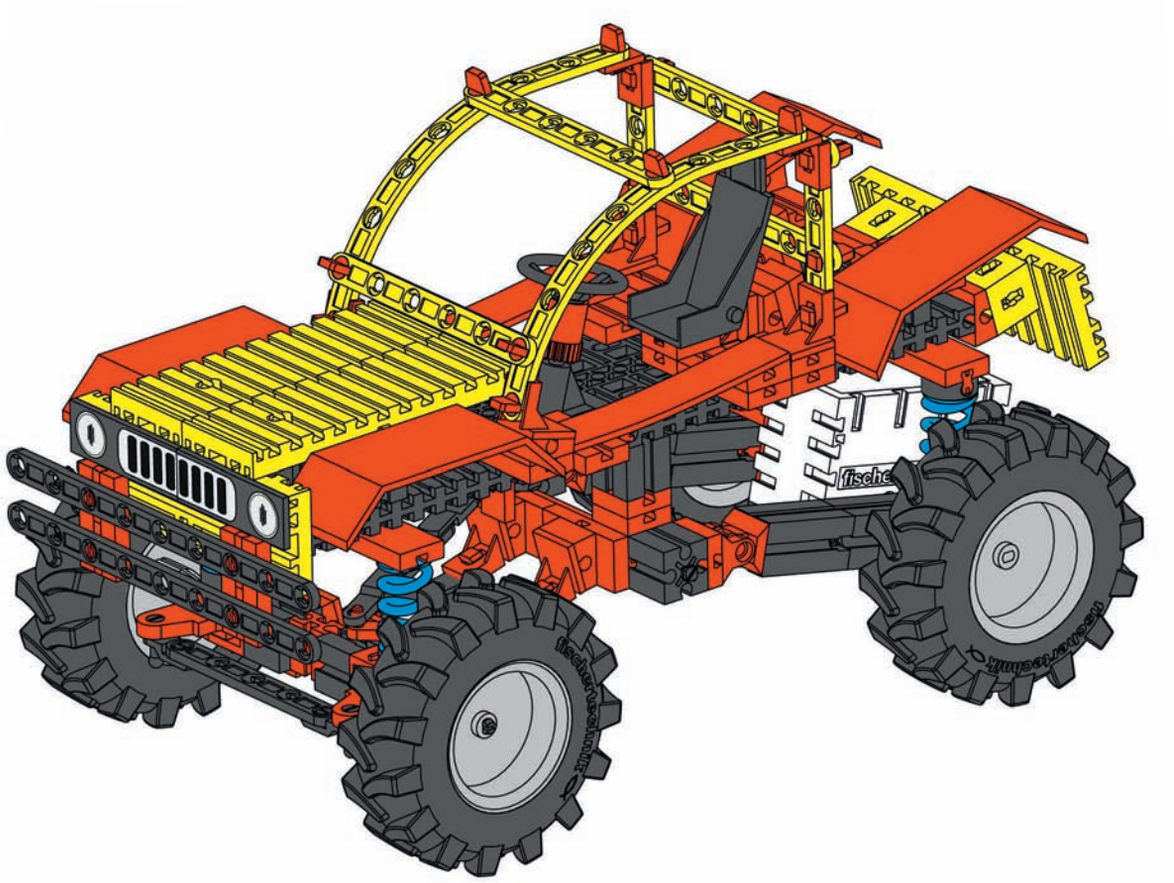

Lenkung feststellen
Arrest steering
Bloquer la direction

Besturing vastzetten
Inmovilizar dirección
Trancar a direção

Bloccare lo sterzo
Застопорить рулевое управление
固定住转向系统

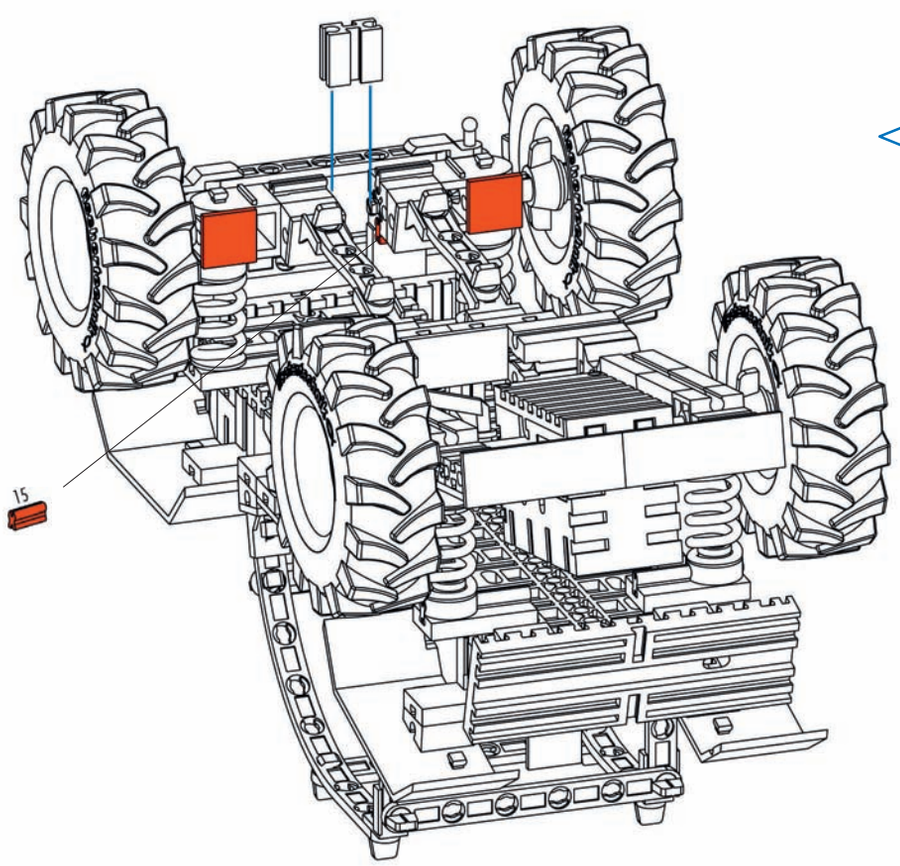

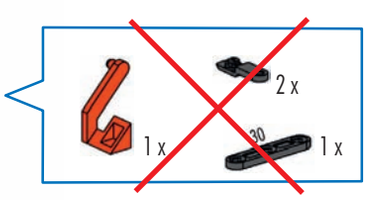

Ferngesteuerter Offroader
Remote controlled offroad vehicle
Véhicule tout-terrain téléguidé

Afstandsgestuurde off-roader
Todoterreno con control remoto
Veículo offroad com controle remoto

Fuoristrada telecomandabile
Внедорожник с дистанционным управлением
遥控越野车

Motor Set XM 505 282	+	Control Set 500 881	+	ACCU SET 34 969

1-8

Seite	28
Page	28
Page	28
Bladzijde	28
Página	28
Pagina	28
Pagina	28
Страница	28
页次	28

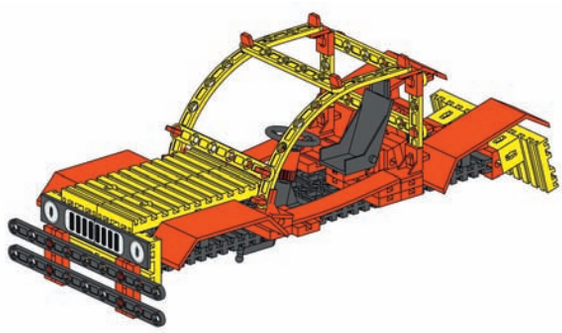

9

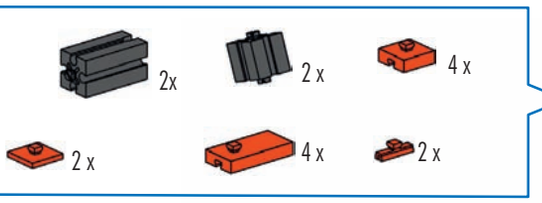

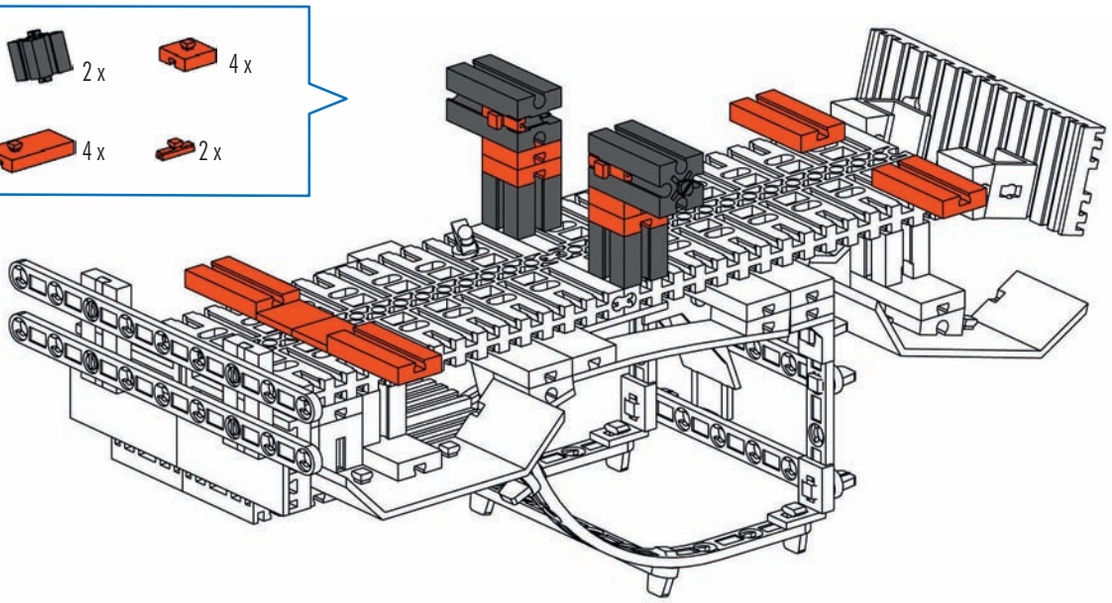

10

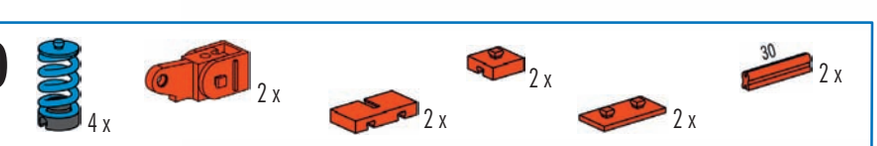

11

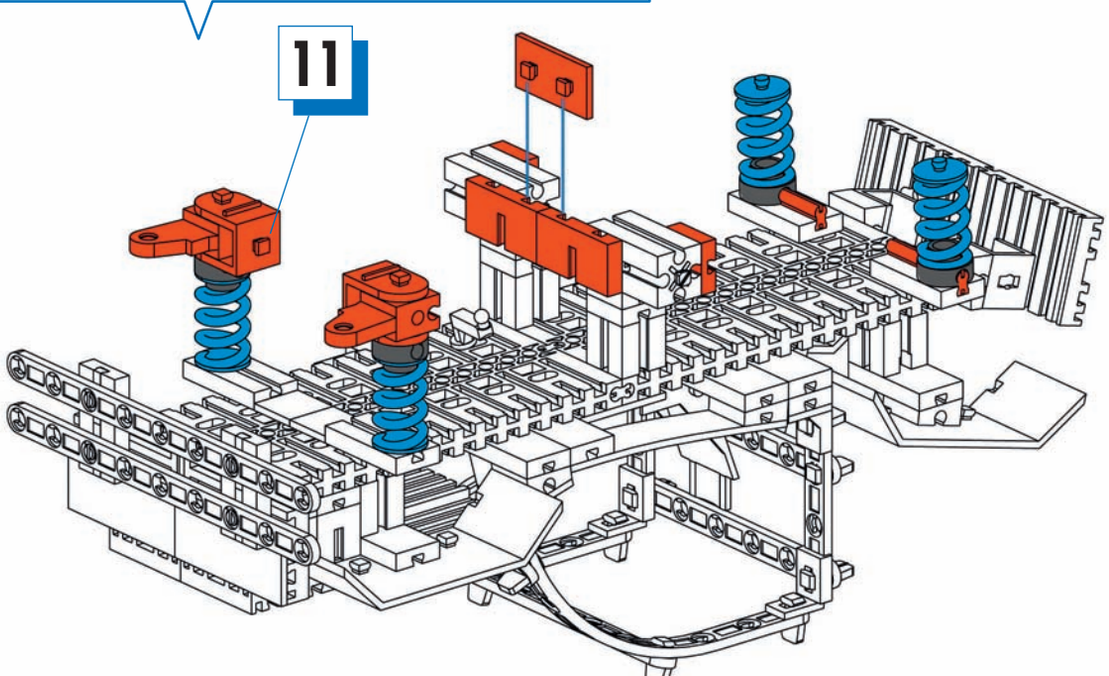

11

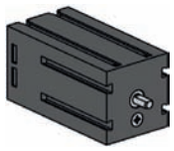

1 x

5 x

1 x

1 x

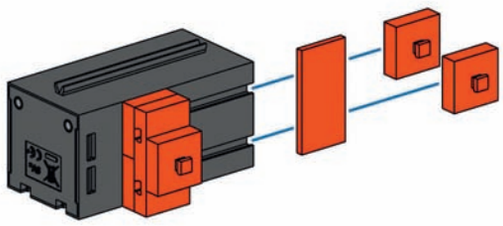

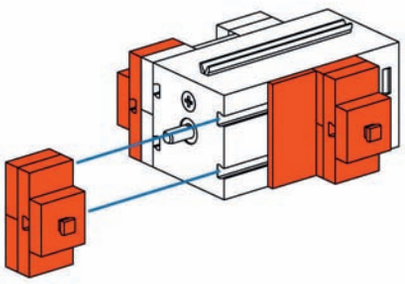

12

7 x

3 x

1 x

13

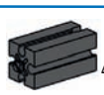

4 x

2 x

1 x

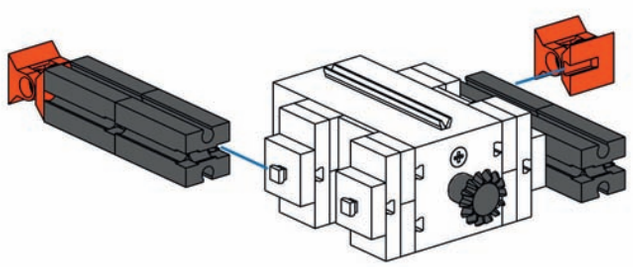

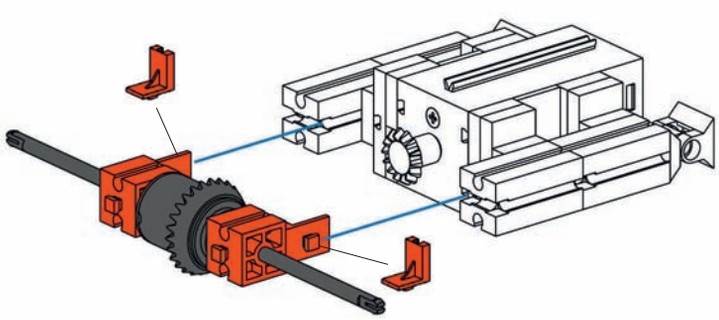

14

2 x

2 x

1 x

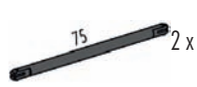

2 x

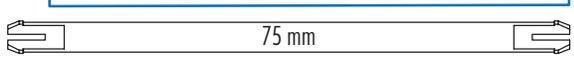

15

1 x

1 x

1 x

1 x

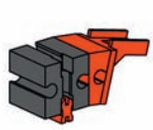

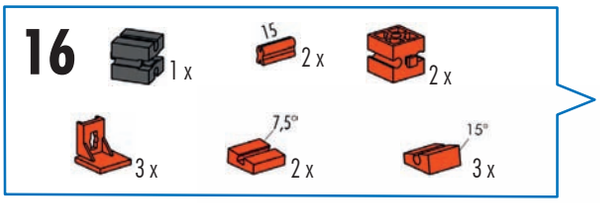
16
1 x
15
2 x
2 x
3 x
7,5°
2 x
15°
3 x

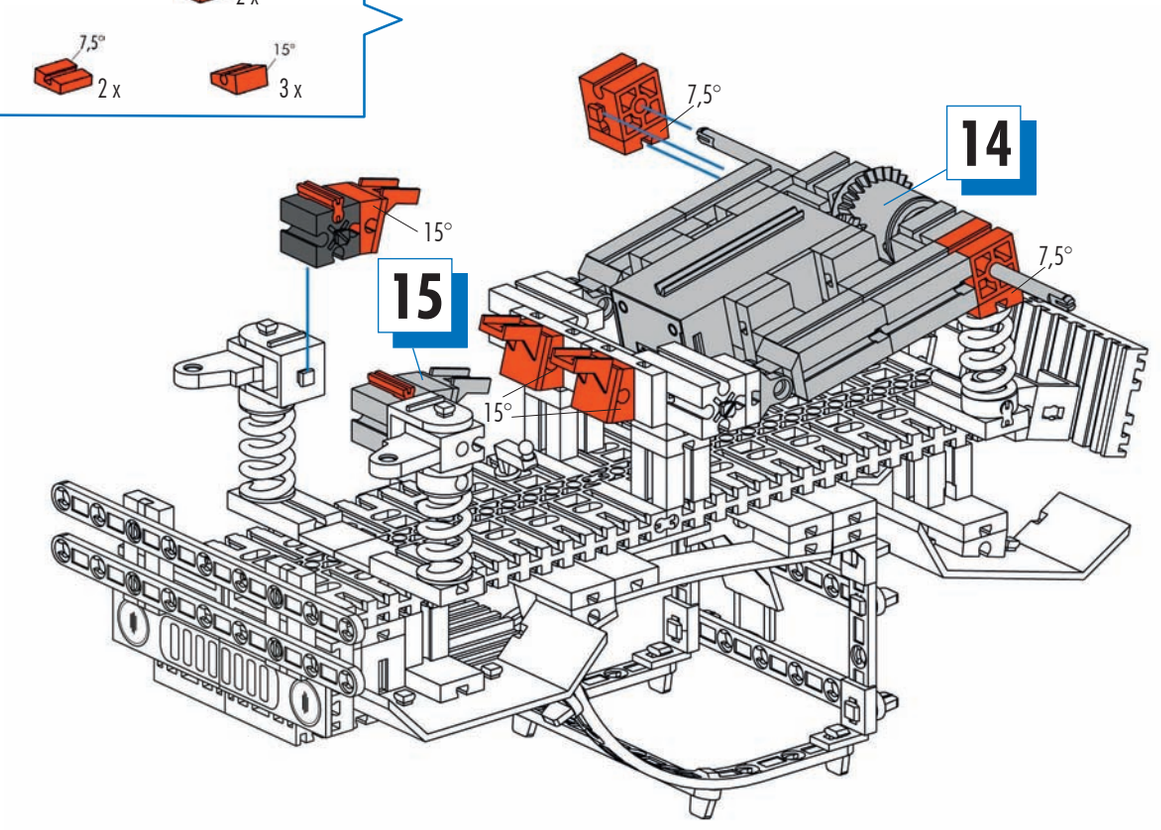
7,5°
14
15°
7,5°
15
15°

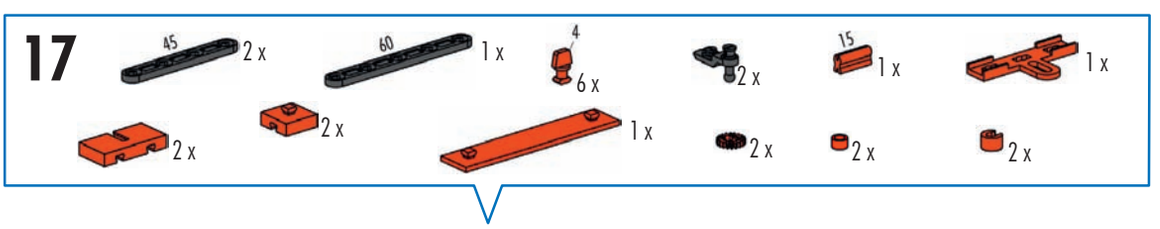
17
45
2 x
60
1 x
4
6 x
2 x
15
1 x
1 x
2 x
2 x
1 x
2 x
2 x
2 x

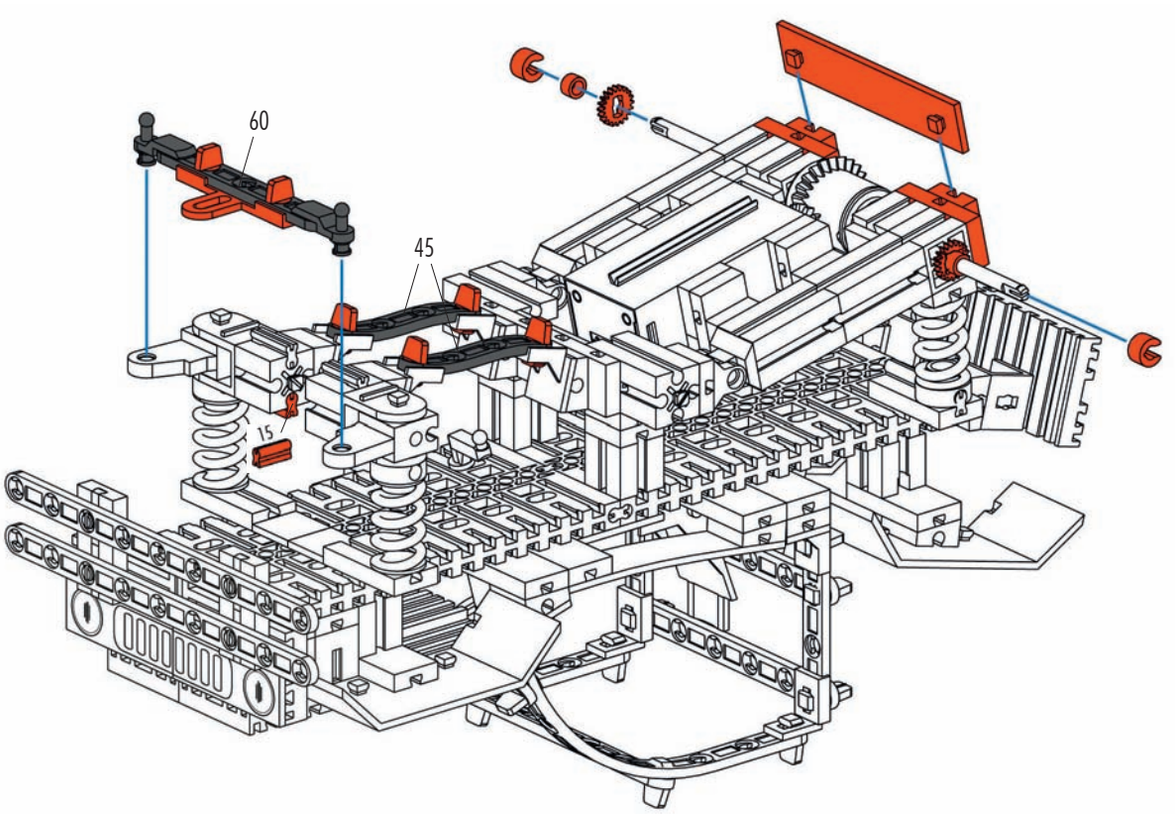
60
45
15

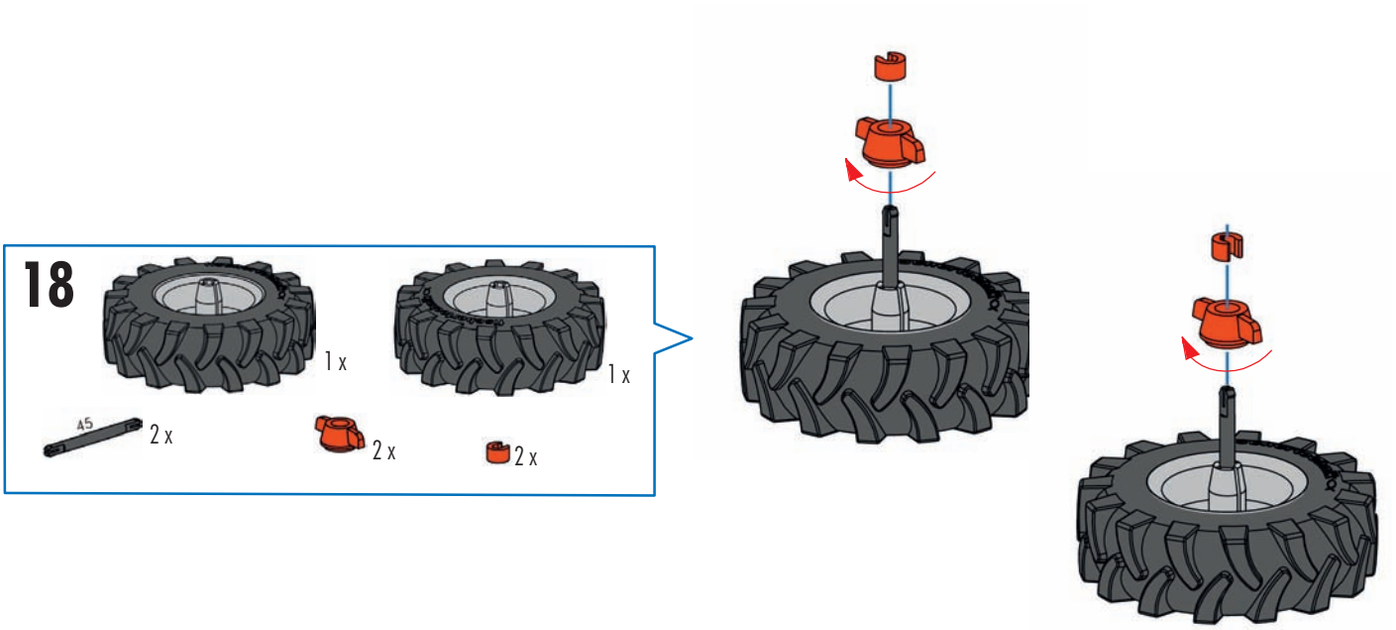
18
1 x
1 x
45
2 x
2 x
2 x

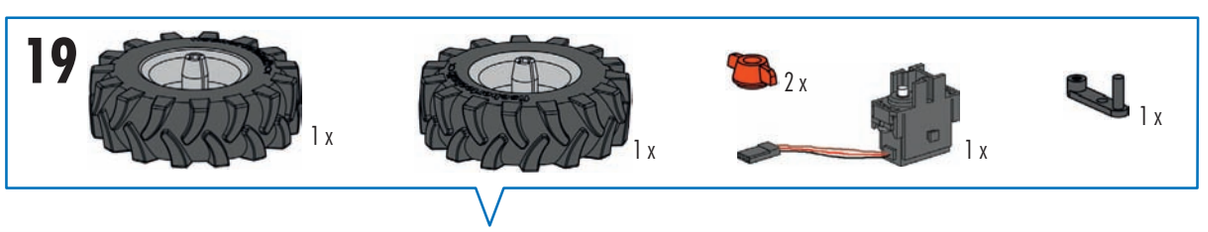
19
1 x
1 x
2 x
1 x
1 x

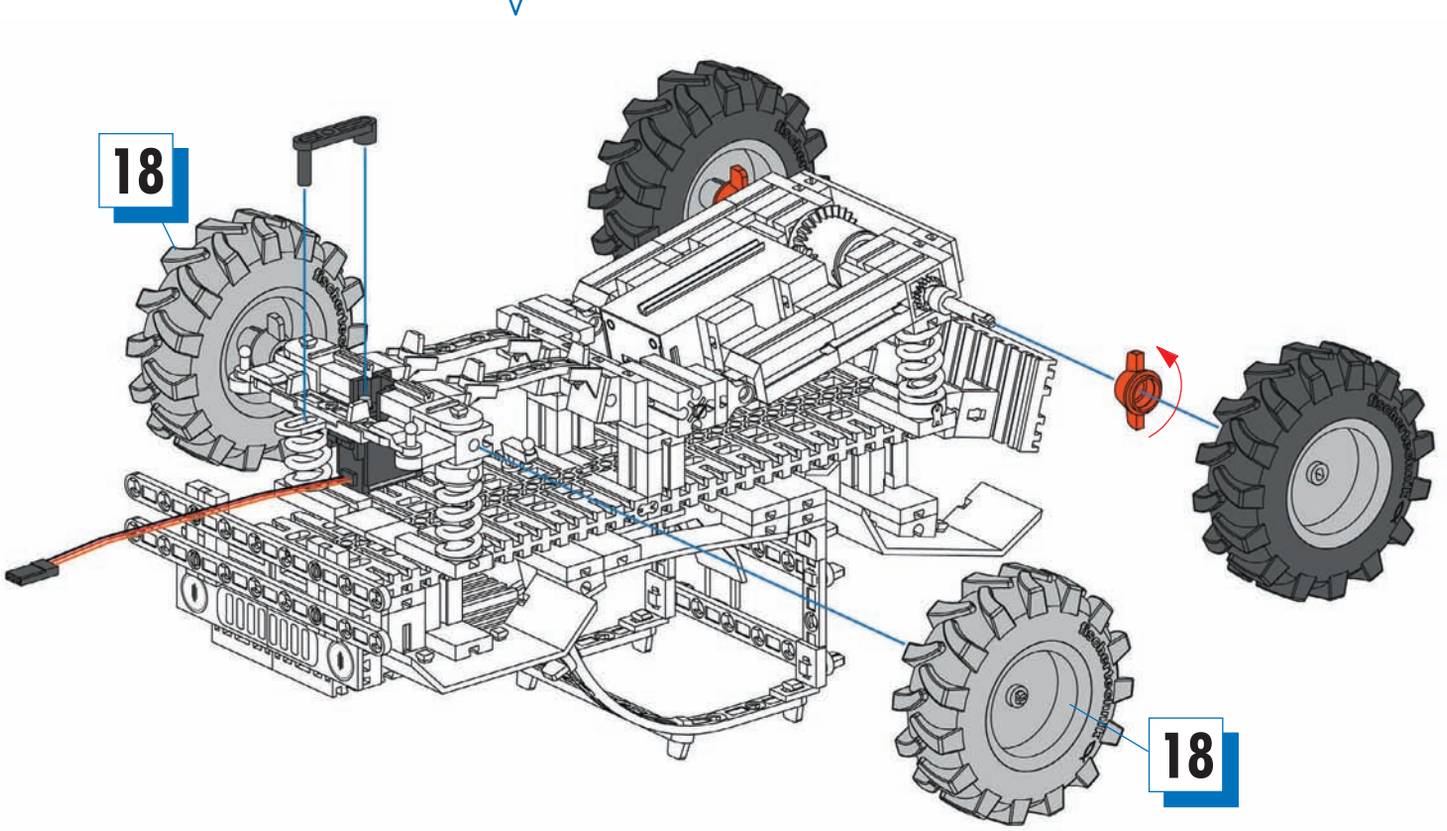
18
18

20

2 x

1 x

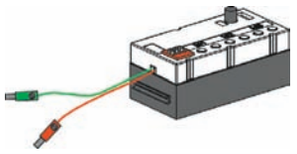
1 x

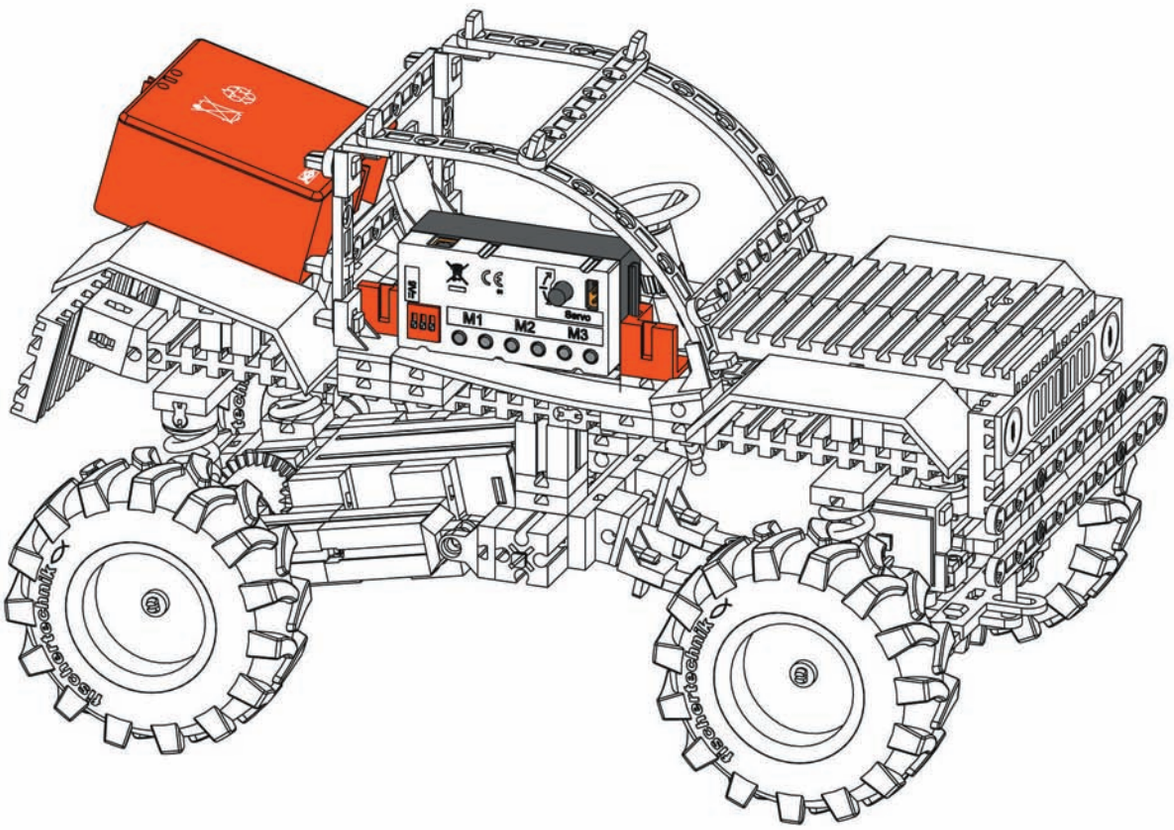

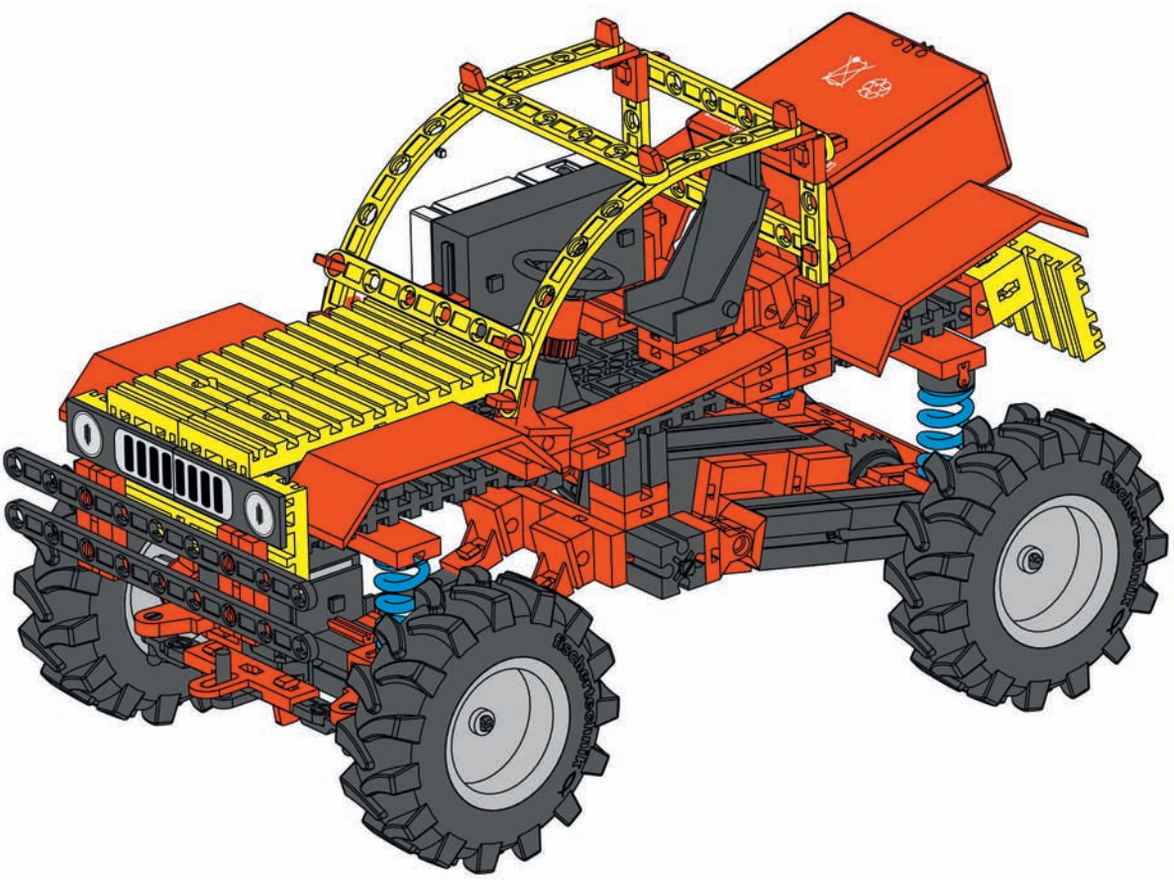

fischertechnik

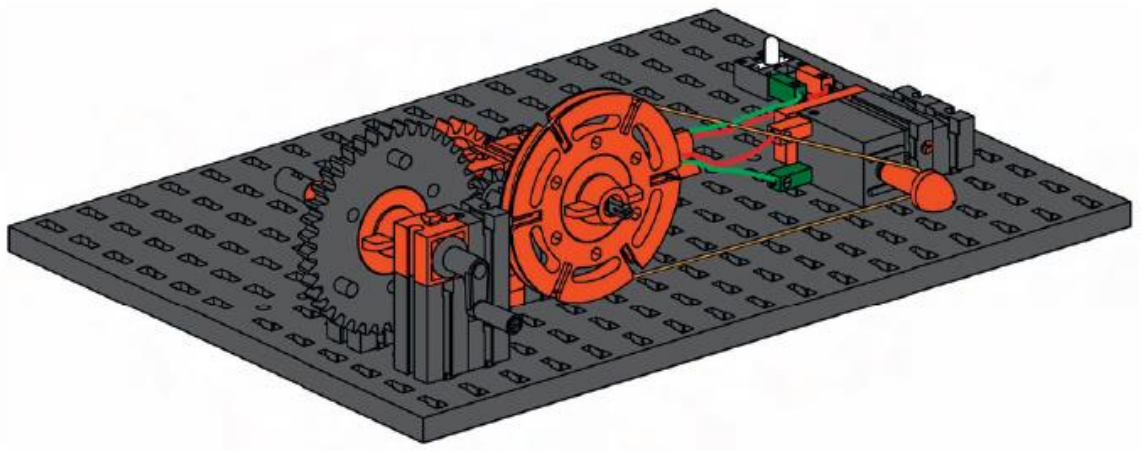

Generator Instructions

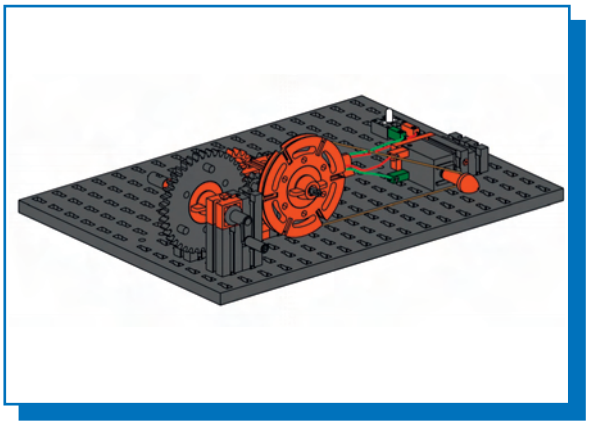

Generator
Generator
Génératrice

Generator
Generador
Gerador

Generatore
Генератор
发电机

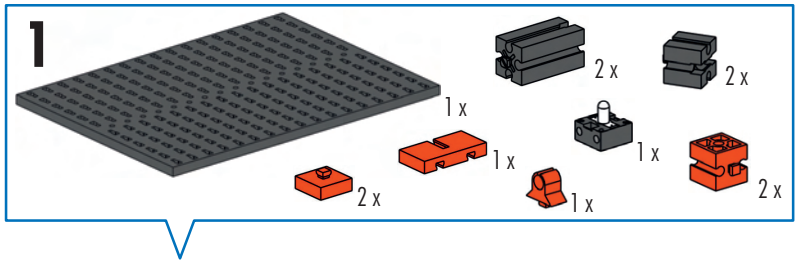

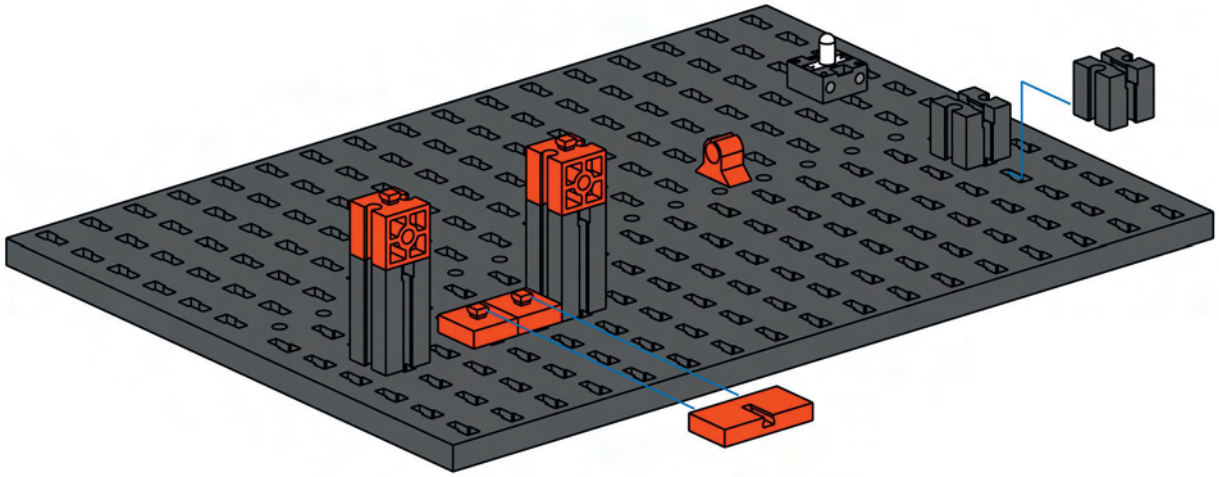

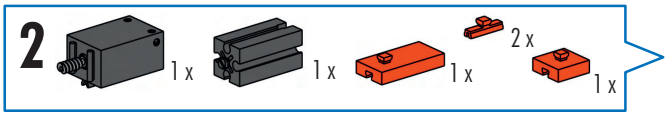

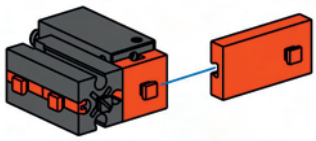

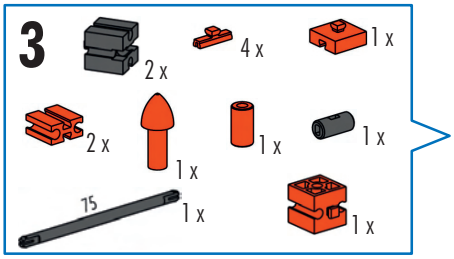

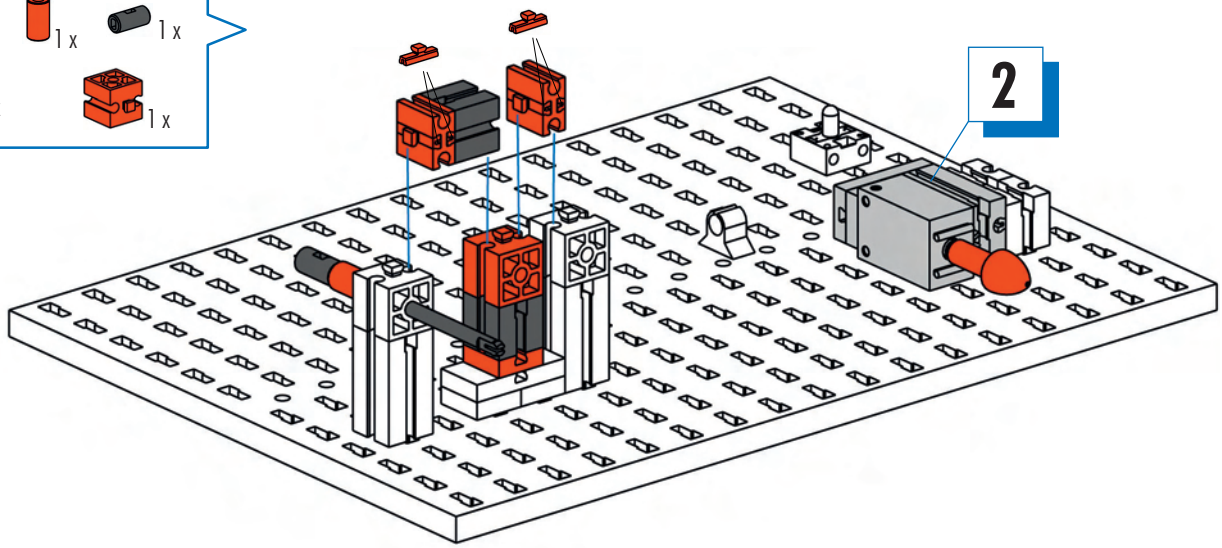

75 mm

257

4

1 x 1 x 30 1 x 1 x 1 x 1 x

30 mm

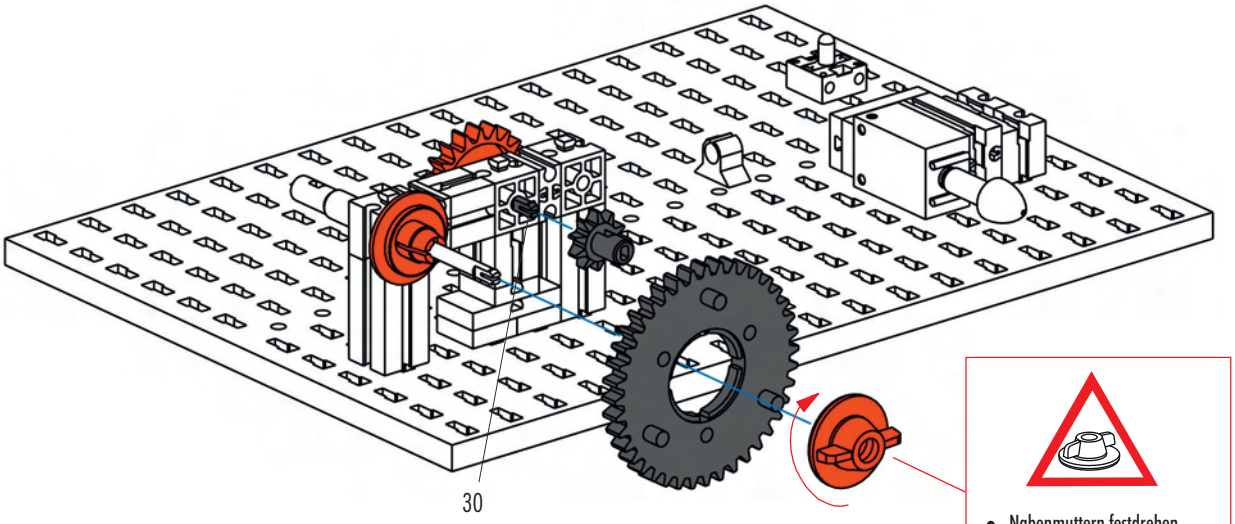

- Nabenmuttern festdrehen
- Fasten the hub nuts home
- Serrer les écrous de moyeu
- Draal de naafmoeren vast
- Atornillar las tuercas laterales
- Apertar bem as porcas de cubo
- Stringere i dadi dei mozzi
- Затянуть гайки ступиц
- 拧紧

5

1 x 1 x 1 x 2 x 1 x 1 x 1 x 1 x 1 x 60 1 x

60 mm

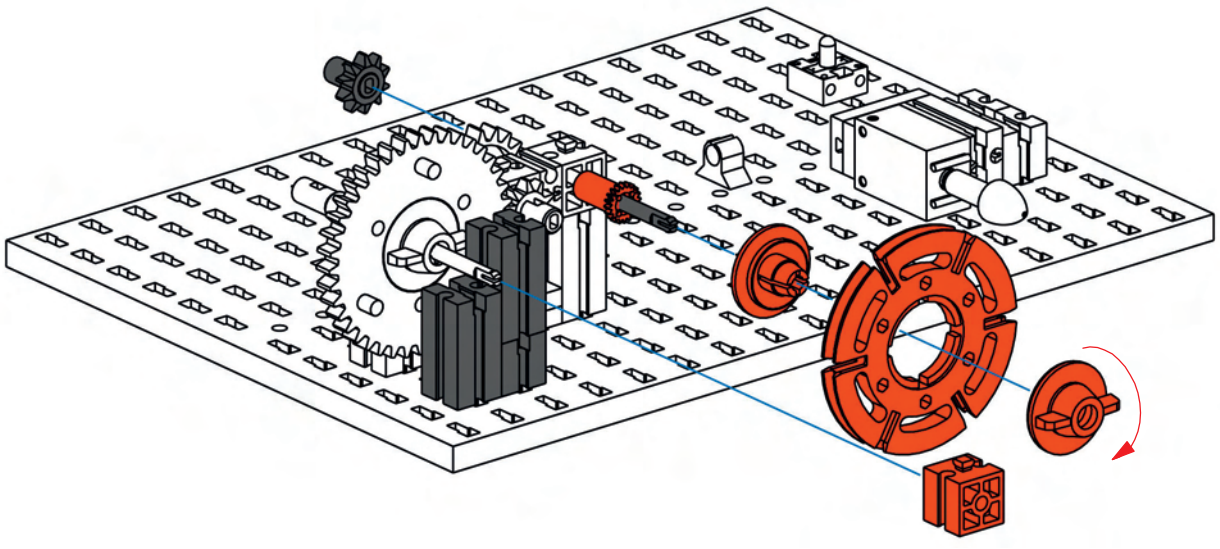

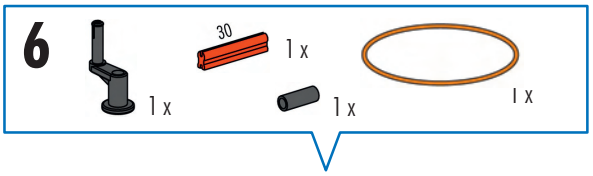

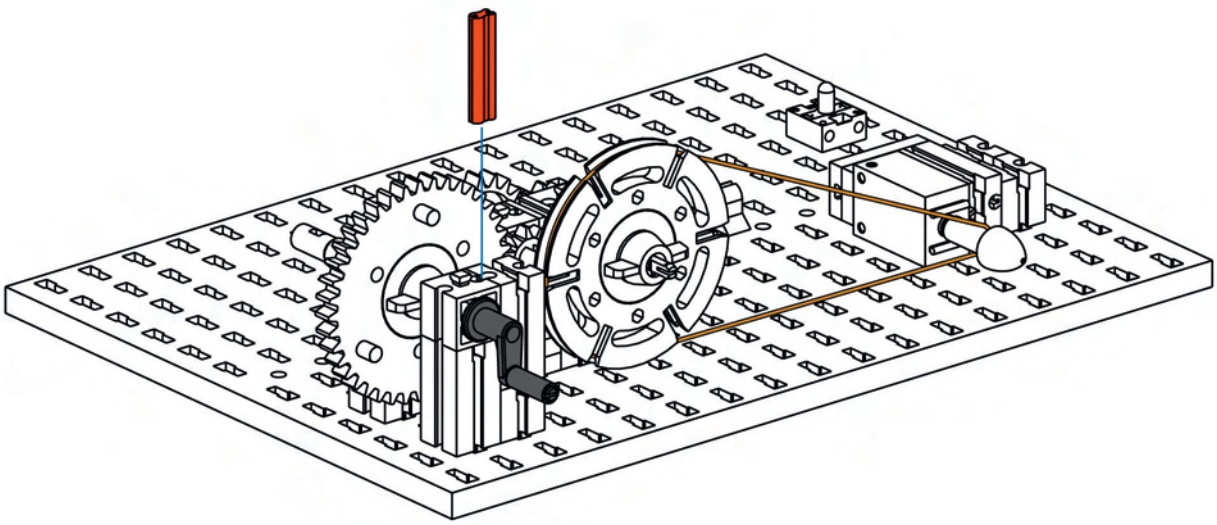

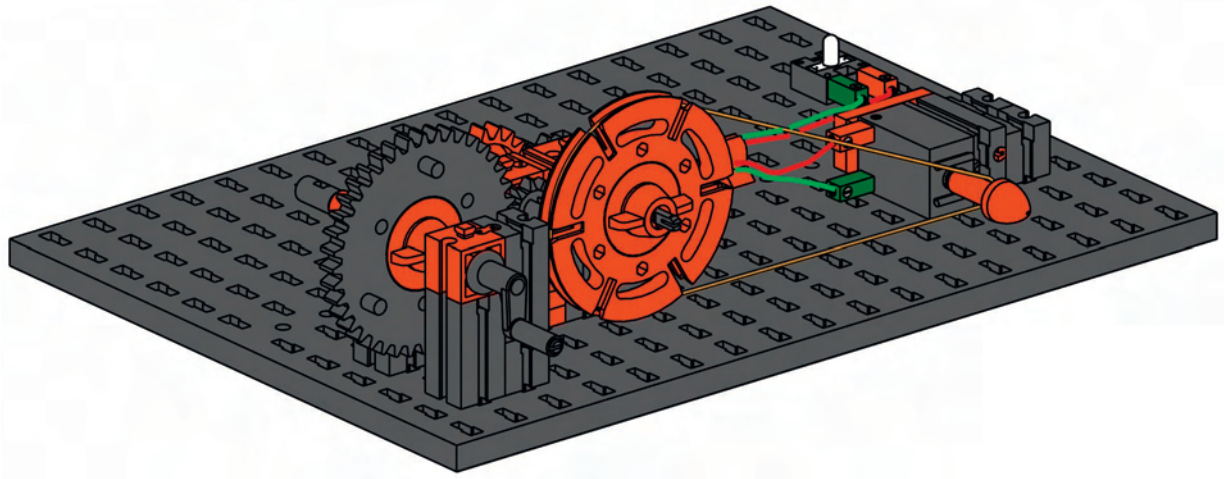

Schaltplan
Circuit diagram
Plan électrique

Schakelschema
Diagrama de circuitos
Plano elétrico de ligação

Schema elettrico
Схема подключения
电路图

fischertechnik

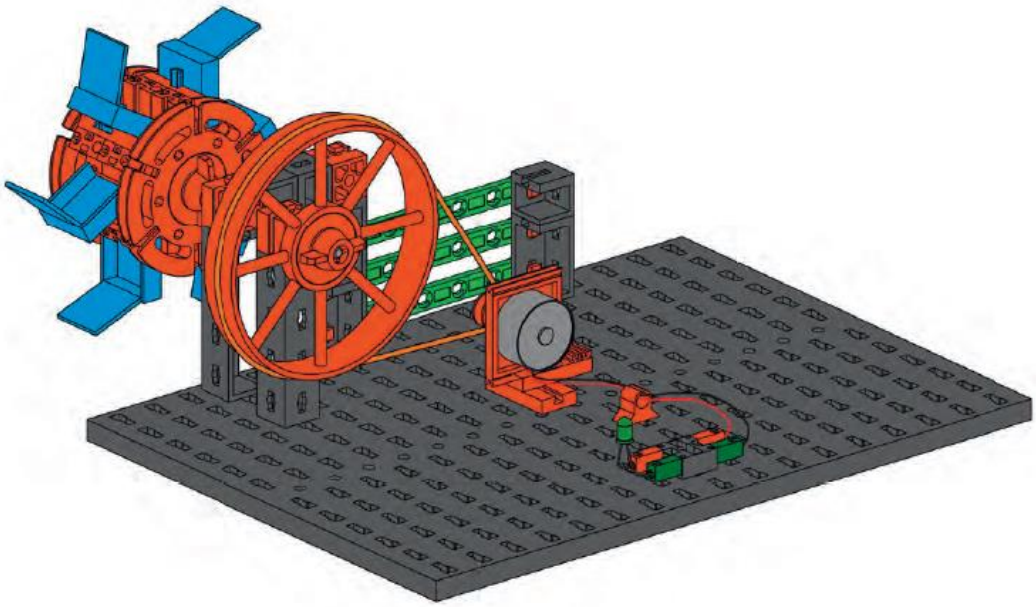

Green Energy

Inhalt
Contents
Contenu
Inhoud
Contenido
Conteúdo
Contenuto
Содержание
目录

Einzelteilübersicht / Spare parts list / Liste des pièces détachées / Onderdelenoverzicht / Lista da piezas / Resumo de peça individual / Singoli componenti / Перечень деталей / 零件概览 2

Montagetipps / Tips for assembly / Tuyaux pour le montage / Montagetips / Consejos para el montaje / "Dicas" para montagem / Consigli per il montaggio / Советы по сборке / 装配建议 3

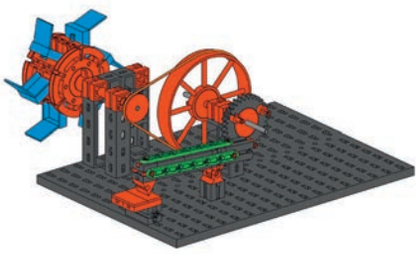

Hammerschmiede / Hammer mill / Forges à marteaux-pilons / Hamersmederij / Forja de martillo pilón / Forja de martelos / Fucina / Кузнечный молот / 锤锻 5

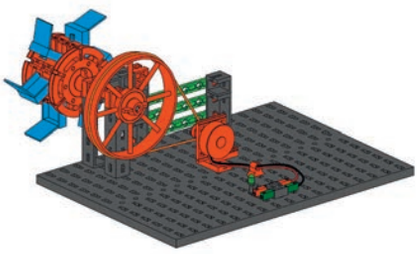

Wasserturbine / Water turbine / Turbine hydraulique / Waterturbine / Turbina de agua / Turbina hidráulica / Turbina idraulica / Гидротурбина / 水轮机.....9

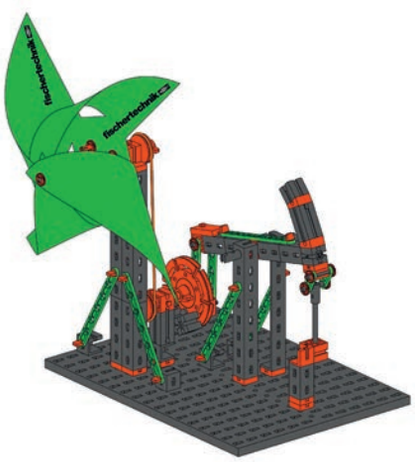

Windrad mit Pumpe / Windmill with pump / Roue éolienne avec pompe / Wieken met pomp / Rueda de viento con bomba / Turbina eólica com bomba / Pala eolica con pompa / Ветряное колесо с насосом / 风车和泵.....12

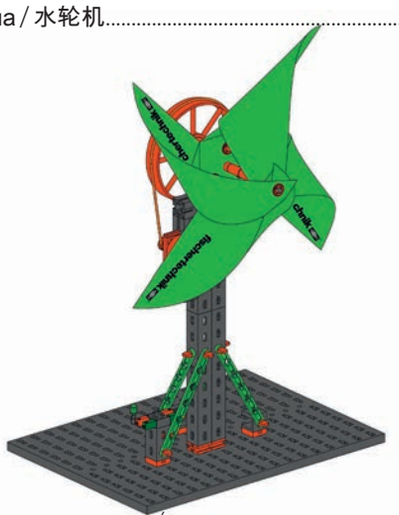

Windkraftanlage / Windpower Station / Éolienne / Windkrachtinstallatie / Instalación eólica / Estación eólica / Impianto eolico / Ветросиловая установка / 风力发电机 18

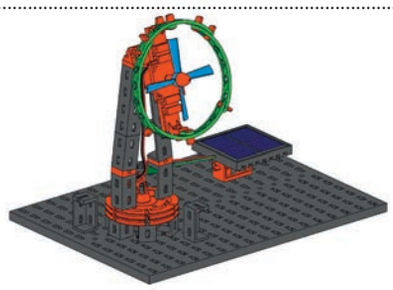

Ventilator / Ventilating fan / Ventilateur / Ventilator / Ventilador / Ventilador / Ventola / Вентилятор / 风扇 23

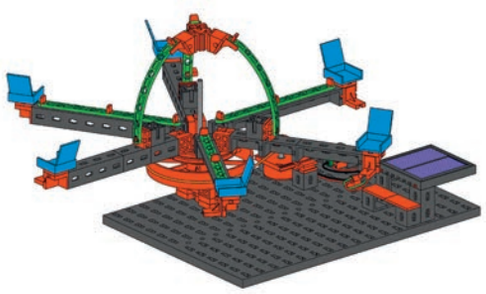

Karussell / Merry-go-round / Manège / Draaimolen / Tiovivo / Carrossel / Giostra / Карусель / 旋转木马 28

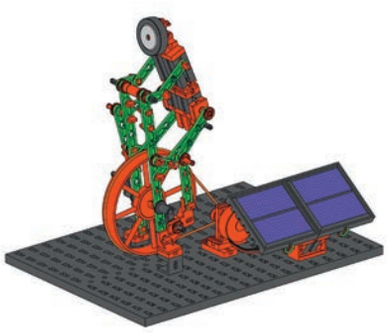

Radfahrer / Bicycle rider / Cycliste / Fietser / Ciclista / Ciclista / Ciclista / Велосипедист / 骑自行车的人.....34

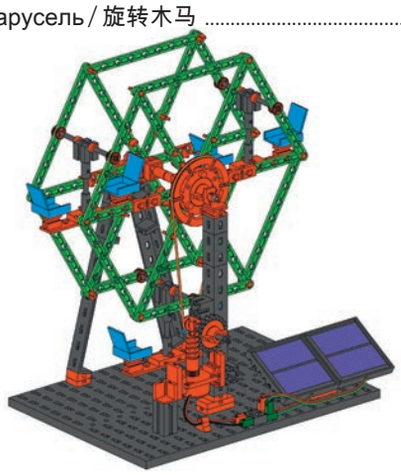

Riesenrad / Ferris wheel / Grande roue / Reuzenrad / Rueda gigante / Roda gigante / Ruota gigante / Колесо обозрения / 大转轮 38

Inhalt
Contents
Contenu

Inhoud
Contenido
Conteúdo

Contenuto
Содержание
目录

Solarfahrzeug / Solar vehicle / Véhicule solaire / Voertuig op zonne-energie / Vehículo solar / Veículo solar / Veicolo ad energia solare / Электромобиль с солнечными батареями / 太阳能电动车.....46

Solartankstelle / Solar charging station / Panneau solaire photovoltaïque / Oplaadstation op zonne-energie / Estación de servicio solar / Posto de abastecimento solar / Pannello solare fotovoltaico / Солнечная зарядная станция / 太阳能充电站.....50

Elektrofahrzeug / Electric vehicle / Véhicule électrique / Elektrisch voertuig / Vehículo eléctrico / Veículo elétrico / Veicolo elettrico / Электромобиль / Электромобиль 电动车.....52

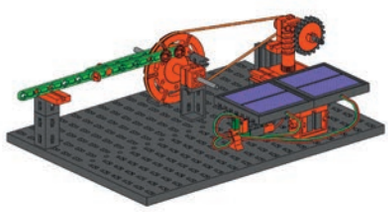

Schranke / Barrier / Barrière / Spoorboom / Barrera / Barreira / Barriera / Шлагбаум / 栏杆.....54

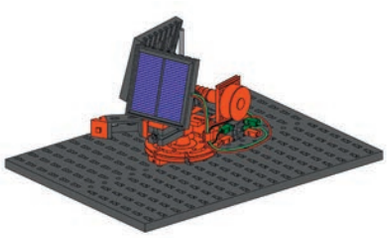

Solarnachführung / Solar tracking / Orientation du panneau solaire / Zonvolgsysteem / Seguimiento solar / Traçamento solar / Orientamento pannelli solari / Слежение за солнцем / 太阳跟踪仪.....58

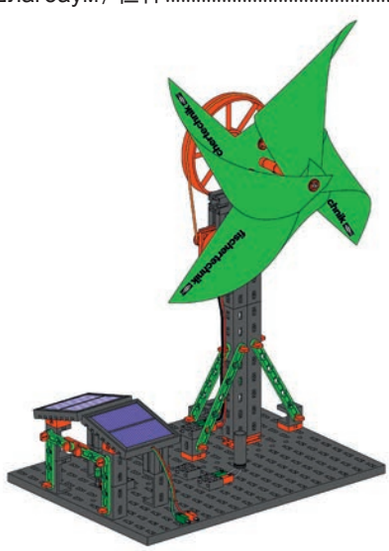

Ökohaus / Eco-house / Maison écologique / Ecologisch huis / Casa ecológica / Casa ecológica / Eco casa / Эко-дом / 生态房屋.....61

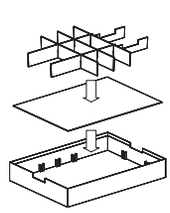

Sortiervorschlag für Aufbewahrungssystem / Storage suggestion for storage system / Suggestion de classement pour le système de stockage / Sorteervoorstel voor bewaarsysteem / Propuesta de clasificación para almacenamiento / Proposta de divisão caixa 1 para sistema de conservação / Proposta di sistemazione per il sistema di conservazione / Рекомендации по сортировке для системы хранения / 保存系统的分类建议

Profi Oeco Energy + Fuel Cell Kit.....77

Einzelteilübersicht
Spare parts list
Liste des pièces détachées

Onderdelenoverzicht
Lista da piezas
Resumo de peça individual

Singoli componenti
Перечень деталей
零件概览

	19 317 1 x
	31 010 2 x
	31 011 3 x
	31 019 2 x
	31 021 1 x
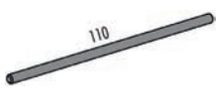	31 031 1 x
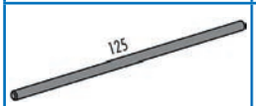	31 036 1 x
	31 058 5 x
	31 124 2 x
	31 336 11 x
	31 337 9 x
	31 426 1 x
	31 436 3 x
	31 597 8 x
	31 667 4 x
	31 671 2 x
	31 674 3 x
	31 690 3 x
	31 848 6 x
	31 915 2 x
	31 916 1 x
	31 981 4 x
	31 982 32 x
	31 983 3 x
	32 064 6 x
	32 071 4 x
	32 228 2 x
	32 229 1 x
	32 230 1 x
	32 850 3 x
	32 870 1 x
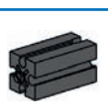	32 879 2 x
	32 881 4 x
	32 913 2 x
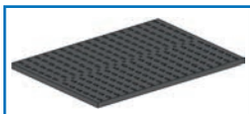	32 985 1 x
	34 995 2 x
	35 031 5 x
	35 033 1 x
	35 049 6 x
	35 051 6 x
	35 063 3 x
	35 064 1 x
	35 065 3 x
	35 069 1 x
	35 088 2 x
	35 405 3 x
	35 969 2 x
	35 980 2 x
	36 227 6 x
	36 264 1 x
	36 293 4 x
	36 323 24 x
	36 324 12 x
	36 334 15 x
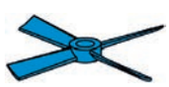	36 337 1 x
	36 443 1 x
	36 920 6 x
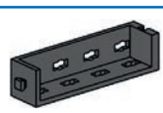	36 921 2 x
	36 922 4 x
	36 950 2 x
	36 973 1 x
	37 031 1 x
	37 237 10 x
	37 468 12 x
	37 679 8 x
	37 681 1 x
	37 783 1 x
	37 858 1 x

Einzelteilübersicht
Spare parts list
Liste des pièces détachées

Onderdelenoverzicht
Lista da piezas
Resumo de peça individual

Singoli componenti
Перечень деталей
零件概览

	38 216 4 x		68 451 1 x		143 236 14 x		146 535 2 x
	38 240 6 x		116 913 2 x	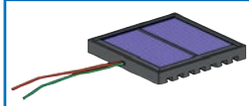	146 142 2 x		35 608 1 x
	38 241 2 x		136 775 1 x		146 529 4 x		147 009 1 x
	38 245 3 x		137 103 1 x		146 531 4 x	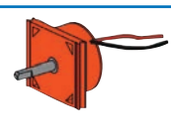	156 494 1 x
	38 413 3 x		137 357 1 x		146 532 4 x		
	38 423 6 x			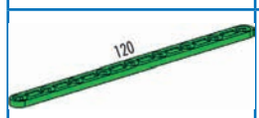	146 533 12 x		
	38 428 6 x		143 235 4 x		146 534 1 x		

Montagetipps
Tips for assembly
Tuyaux pour le montage

Montagetips
Consejos para el montaje
"Dicas" para montagem

Consigli per il montaggio
Советы по сборке
装配建议

Kabel und Stecker
Plugs and cables
Fiches et des câbles

Stekkers en cables
Enchufes en cables
Cabos e contatos

Cavi e connettori
Провода и штекеры
电缆和插头

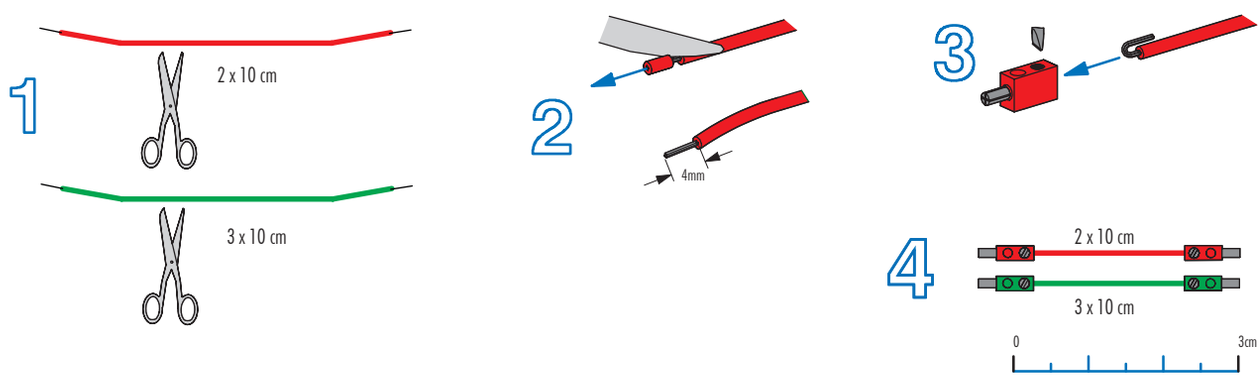

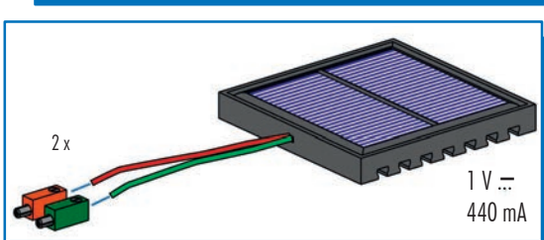

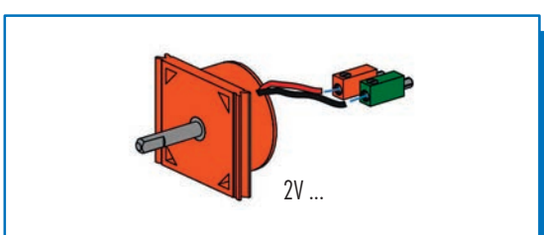

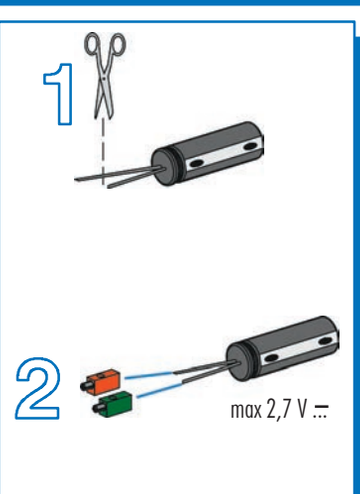

Langer Draht + = roter Stecker
Long wire + = red plug
Fil long + = fiche rouge
Lange draad + = rode stekker
Alambre largo + = conector rojo
Fio longo + = conector vermelho
Filo lungo + = connettore rosso
Длинный провод + = красный штекер
长电线 + = 红色插头

Kurzer Draht - = grüner Stecker
Short wire - = green plug
Fil court - = fiche verte
Korte draad - = groene stekker
Alambre corto - = conector verde
Fio curto - = conector verde
Filo corto - = connettore verde
Короткий провод - = зеленый штекер
短电线 - = 绿色插头

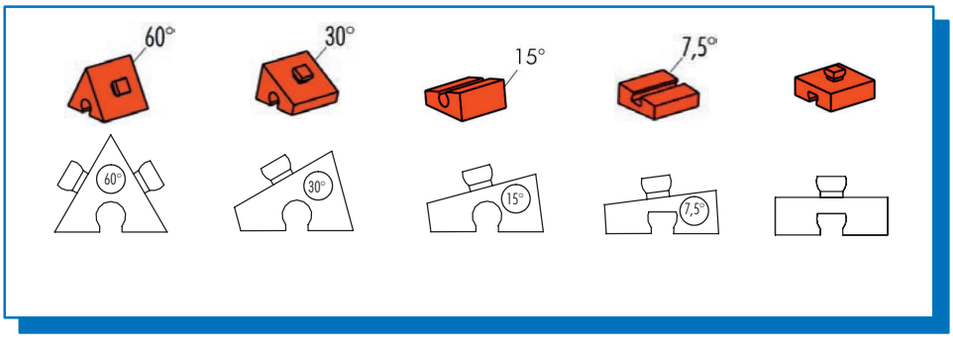

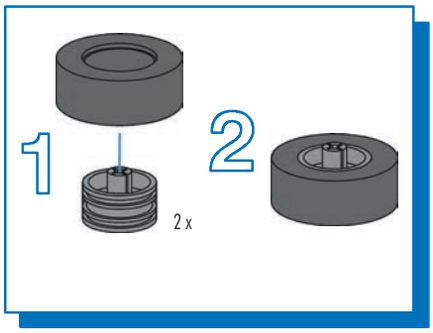

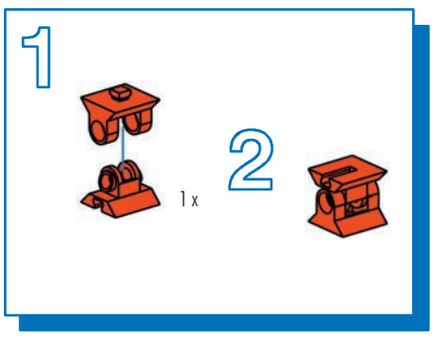

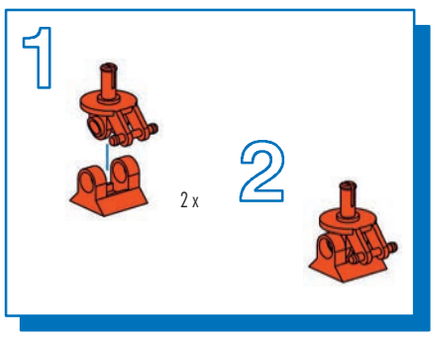

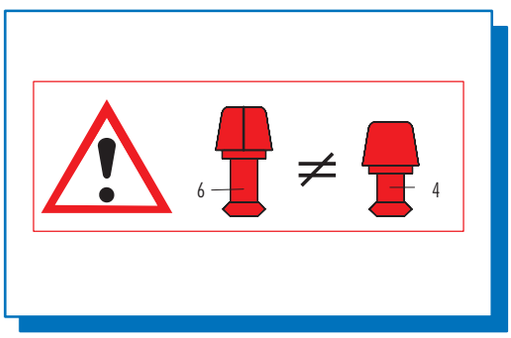

Sicherheitshinweise
Safety Information
Consignes de sécurité
Veiligheidsrichtlijnen
Indicaciones de seguridad
Observações sobre segurança
Informazioni per la sicurezza
Указания по технике безопасности
安全指南

- Achtung!
  Die elektrischen Bauteile Solar-Micromotor, LED und Goldcap dürfen nur mit der vorgeschriebenen Spannung von max. 3 V betrieben werden. Auf keinen Fall an andere 9V-fischertechnik-Stromversorgungen anschließen.
- Caution!
  The Solar Micromotor electric components, LED and Goldcap may only be operated with the prescribed voltage of 2 V. Do not ever connect them to other 9V fischertechnik power supplies.
- Attention !
  Les composants électriques micromoteur solaire, LED et Goldcap ne doivent fonctionner que sous la tension prescrite de 2 V. Ne les raccorder en aucun cas aux autres systèmes d'alimentation électriques de 9 V de fischertechnik.
- Pas op!
  De elektrische componenten zonne-energie-micromotor, LED en Goldcap mogen alleen worden gebruikt met de voorgeschreven spanningvan 2V. Sluit ze in geen geval aan op andere 9V-fischertechnik-stroomvoorzieningen.
- ¡Atención!
  Los componentes eléctricos Micromotor solar, LED y Goldcap sólo deben ser operados con la tensión prescrita de 2 V. En ningún caso deben conectarse a otras fuentes de alimentación de 9 V de fischertechnik.
- Atenção!
  Os componentes elétricos Solar-Micromotor, LED e Goldcap só podem ser operados com a tensão prescrita de 2V. Nunca ligar a outras fontes de alimentação de 9V da fischertechnik.
- Attenzione!
  I componenti elettrici: micromotore solare, LED e goldcap devono funzionare soltanto con la tensione prevista di 2V. Non eseguire assolutamente l'allacciamento ad altri alimentatori fischertechnik da 9V.
- Внимание!
  Такие электрические детали, как микродвигатель, светодиод и конденсатор Goldcap могут работать только с напряжением 2В.Категорически запрещается подключать их к источникам электропитания fischertechnik с напряжением 9В.
- 注意！
  只允许用规定的2V 的电压来运行电气部件如太阳能微型电机，LED 和 Goldcap。无论如何不得与其他的 9V 慧鱼技术电源部件相连接。

- Achtung! Verletzungsgefahr an Bauteilen mit funktionsbedingten scharfen Kanten und Spitzen!
- Caution! Be careful not to hurt yourself on components with sharp or pointed edges!
- Attention! Risque de blessure sur les élements comportant des arêtes et o pointes vives indispensables au bon fonctionnement!
- Let op! U kunt zich bezeren aan bouwstenen met sherpe randen of punten!
- Attenzione! Esiste il pericolo di lesione con i pezzi di costruzione che hanno bordi e punte spigolosi necessari per la funzionalita del pezzo!
- Alle Einzelteile, insbesondere bewegliche Teile sind falls notwendig zu warten und zu reinigen.
- All components, especially moving parts, should be maintained and cleaned as necessary.
- Toutes les pièces détachées et en particulier les pièces mobiles, sont, si nécessaire, à entretenir et à nettoyer.
- Alle onderdelen, vooral de bewegende delen, kunnen, indien noodzakelijk, onderhouden en gereinigd worden.
- Es necesario limpiar y mantener en buen estado todas las diferentes piezas - especialmente las piezas móviles.
- Atenção! Perigo de ferimentos em peças componentes com cantos vivos e pontas obrigatórios para o funcionamento !
- Attenzione! Pericolo di lesioni dovute a componenti con spigoli vivi e punte per motivi funzionali!
- Будьте осторожны! Об острые края деталей и и наконечники можно порезаться!
- 注意！
  因功能需要而带有锋利的棱边和尖角的部件可能会带来受伤危险！
- Caso necessário, todas as peças individuais, especialmente peças móveis, tem que ser submetidas à manutenção e ser limpadas.
- Se necessario, tutti i singoli componenti, soprattutto le parti mobili, si devono eventualmente sottoporre a manutenzione e pulizia.
- Все детали, особенно подвижные, требуют ухода и чистки.
- 必要时应保养和清洁所有零件，尤指运动部件。

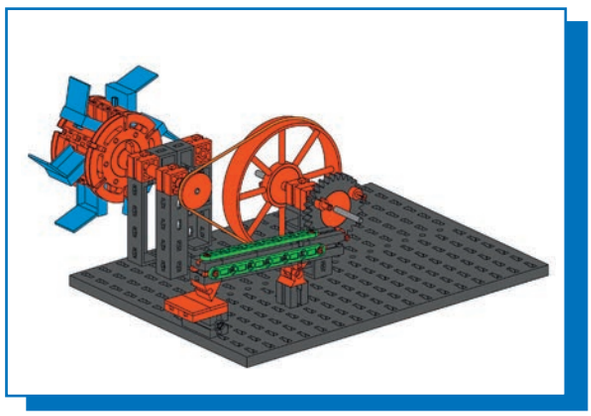

Hammerschmiede
Hammer mill
Forges à marteaux-pilons
Hamersmederij
Forja de martillo pilón
Forja de martelos
Fucina
Кузнечный молот
锤锻

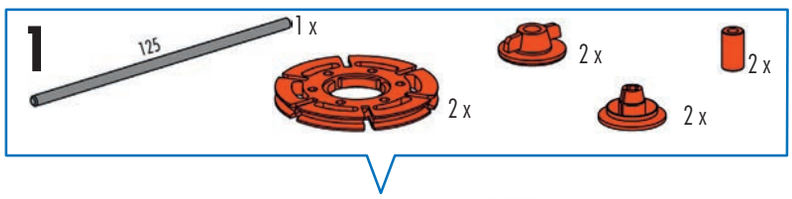

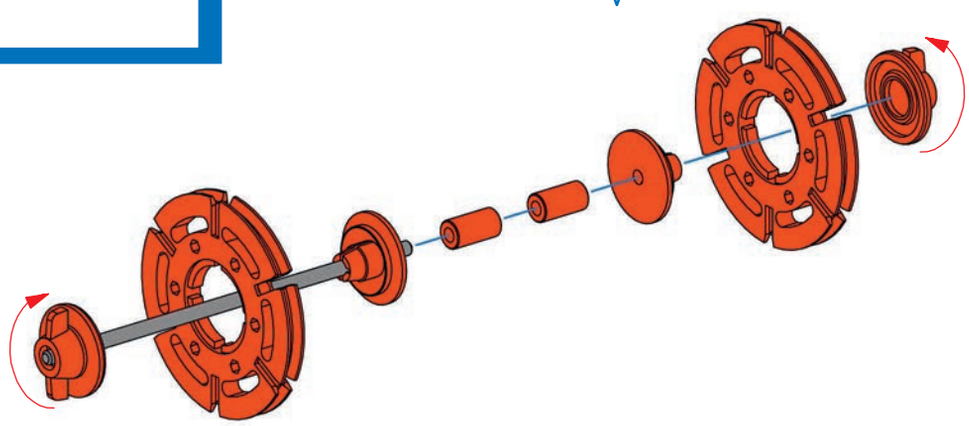

125 mm

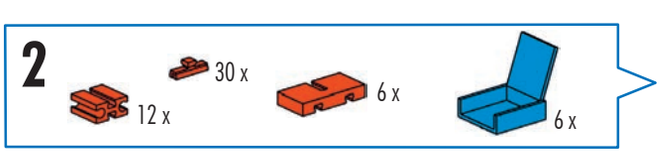

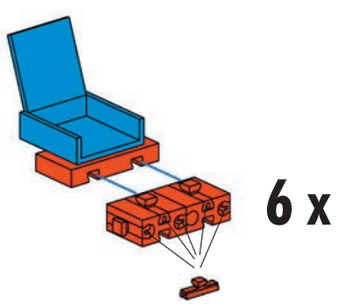

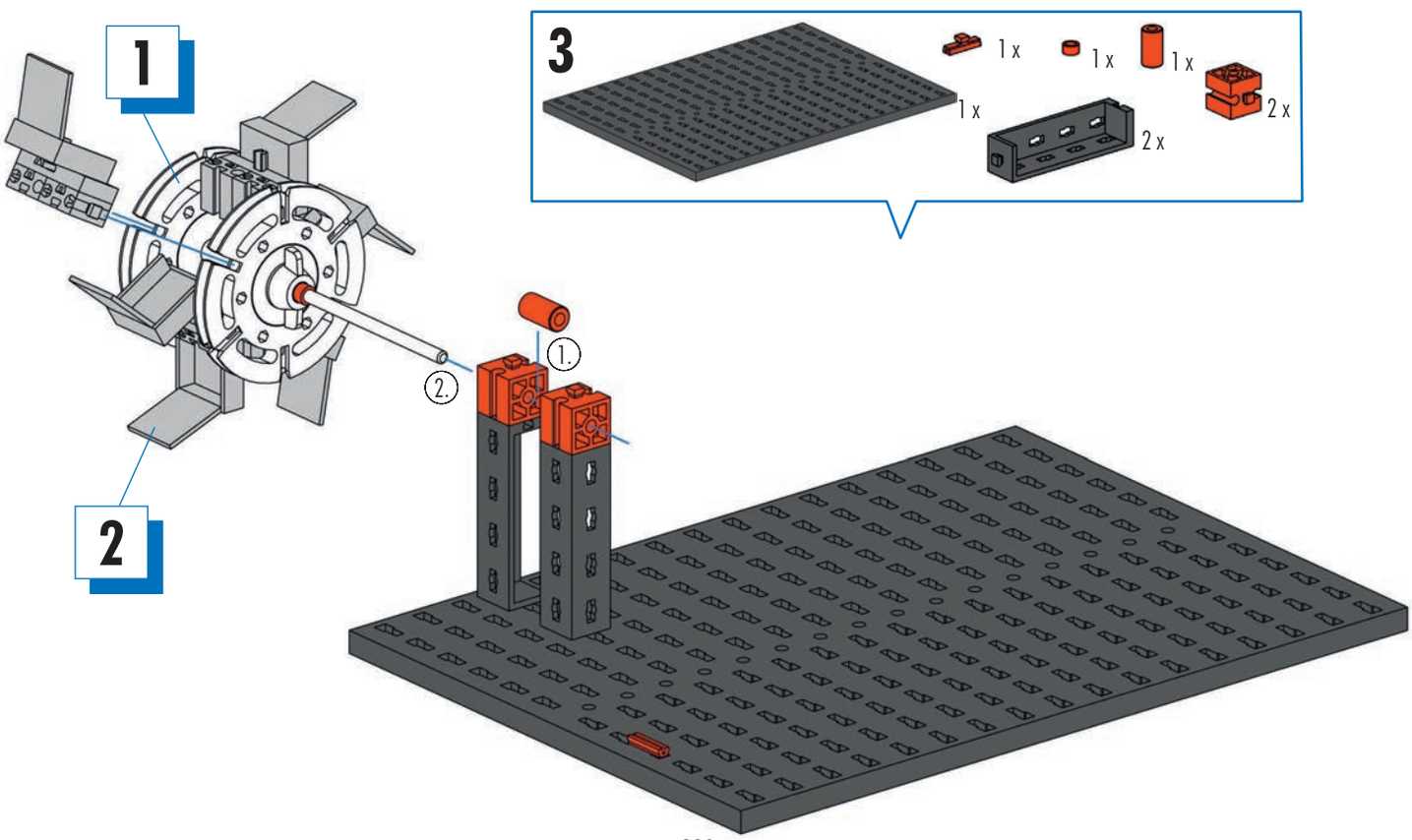

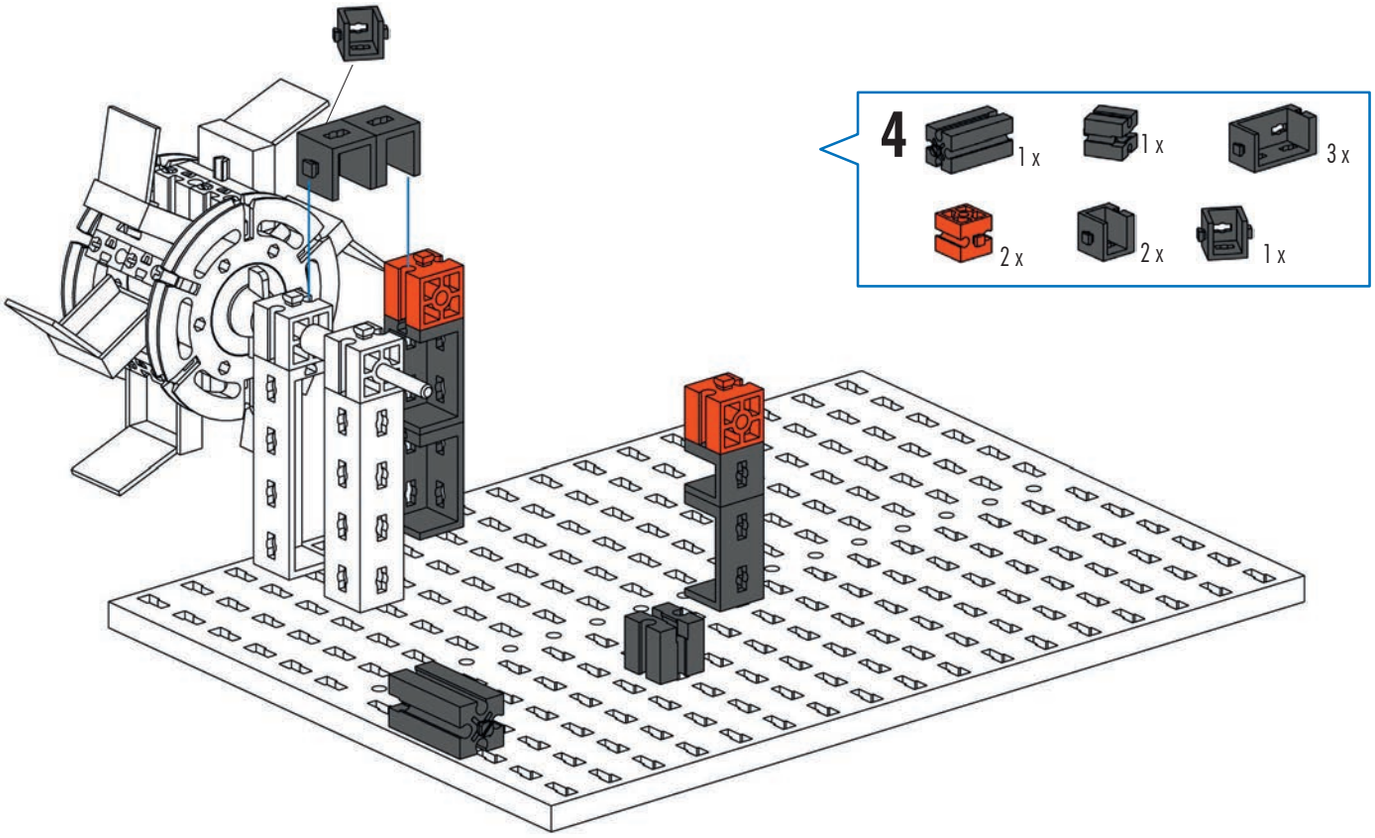
4
1 x
1 x
3 x
2 x
2 x
1 x

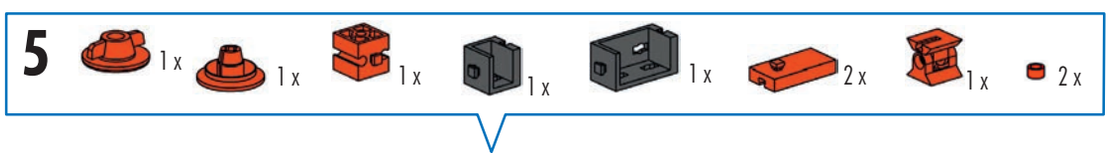
5
1 x
1 x
1 x
1 x
1 x
2 x
1 x
2 x

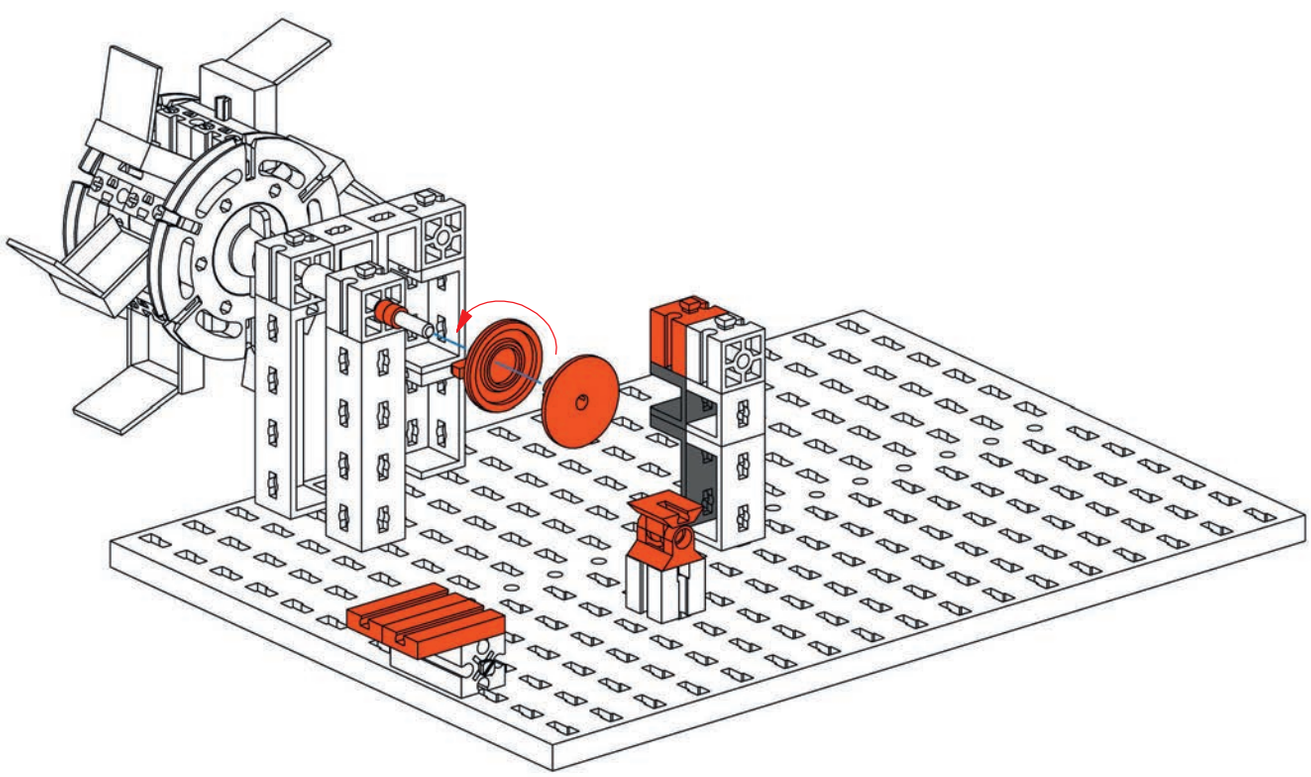

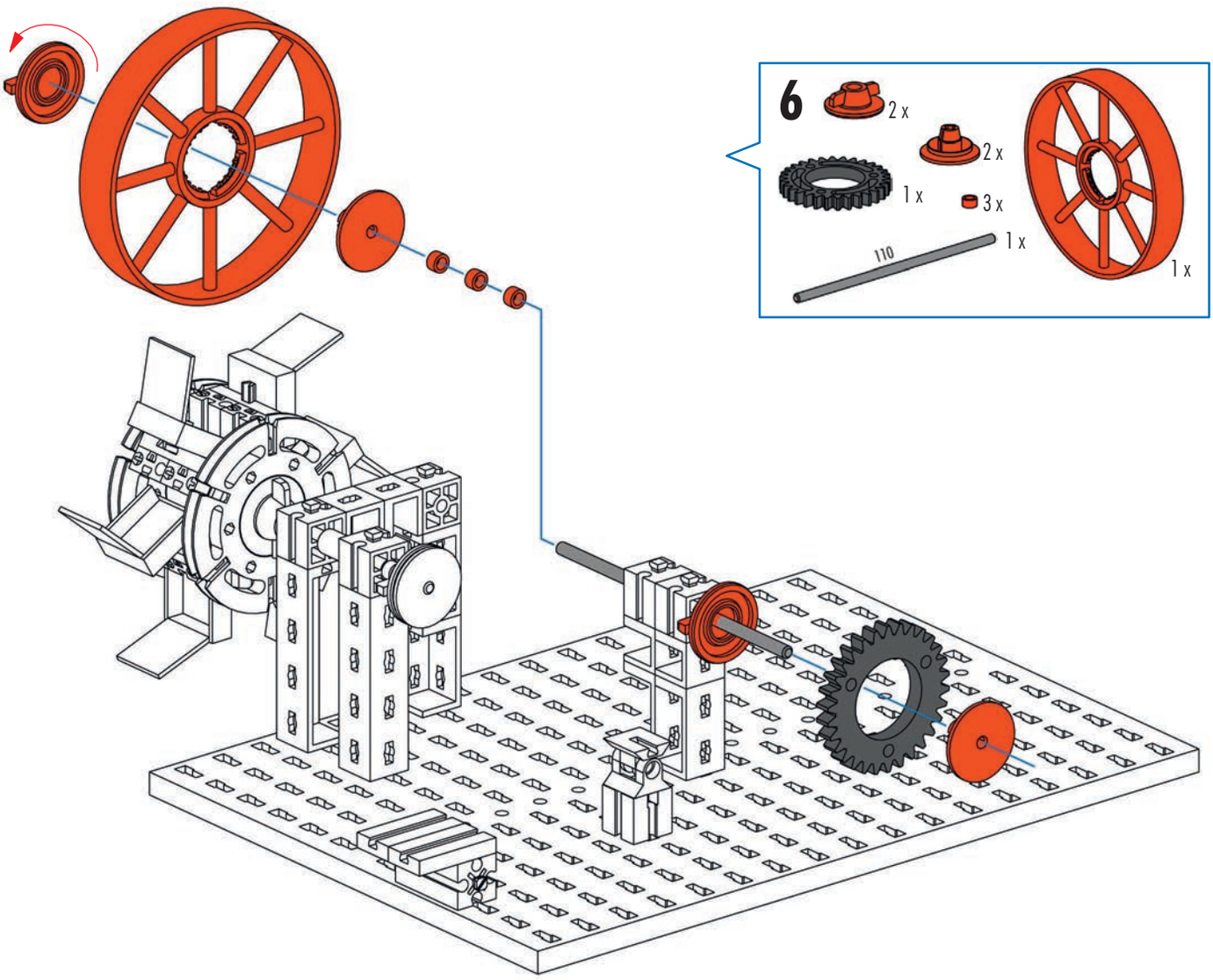
6
2 x
2 x
1 x
3 x
110
1 x
1 x
110 mm

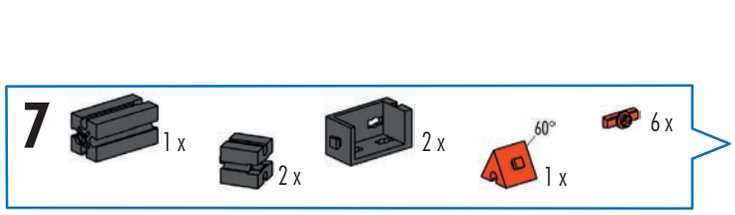
7
1 x
2 x
2 x
60°
1 x
6 x

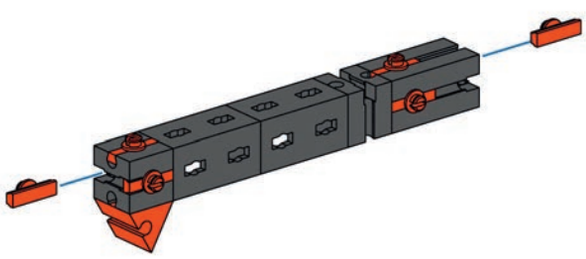

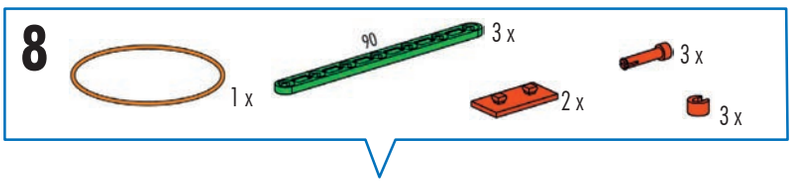
8
1 x
90
3 x
3 x
2 x
3 x

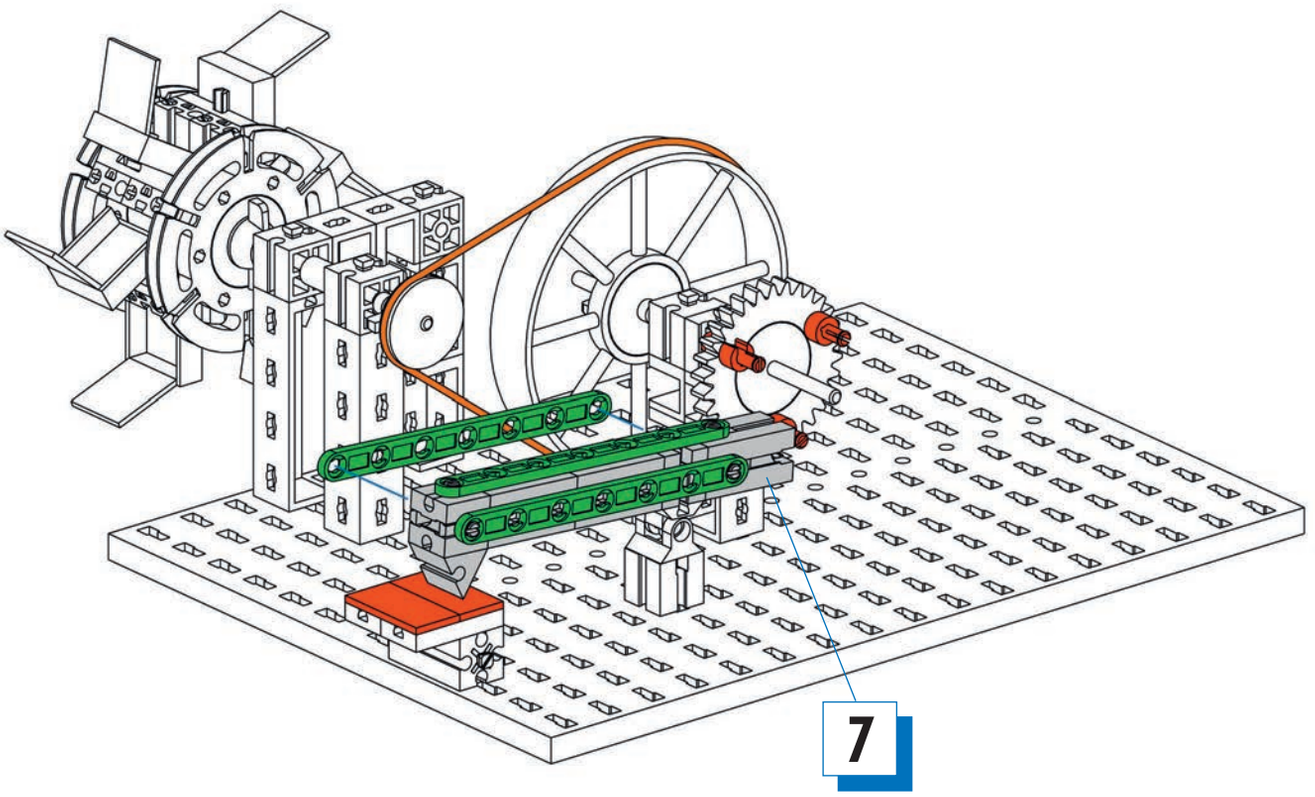
7

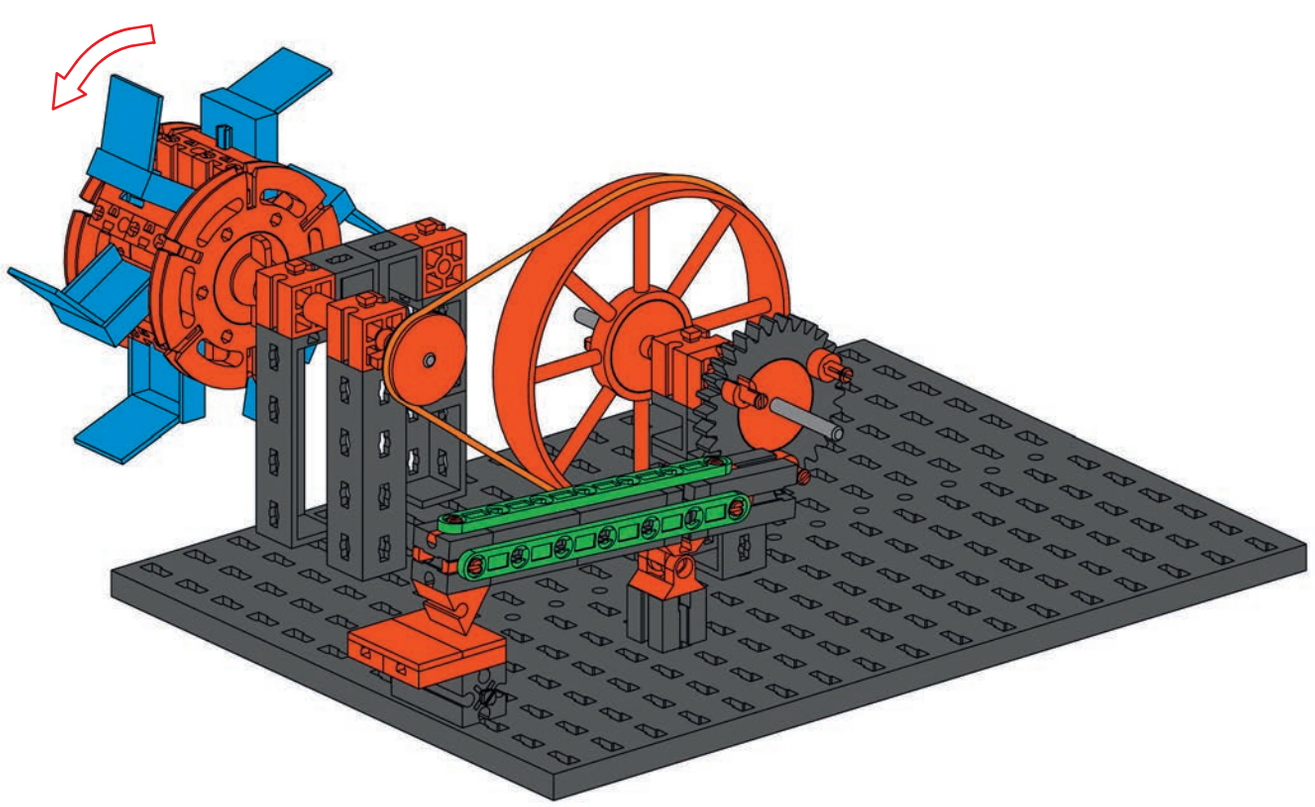

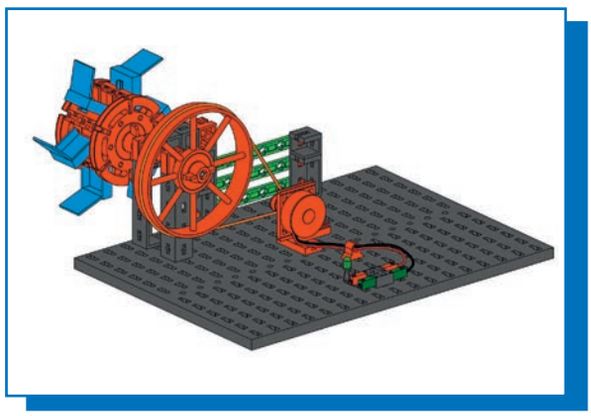

Wasserturbine
Water turbine
Turbine hydraulique
Waterturbine
Turbina de agua
Turbina hidráulica
Turbina idraulica
Гидротурбина
水轮机

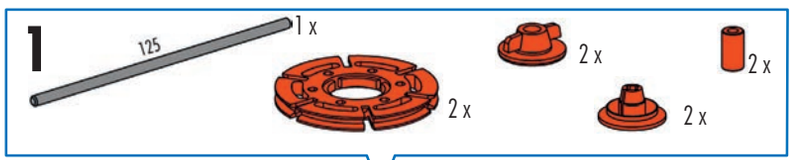

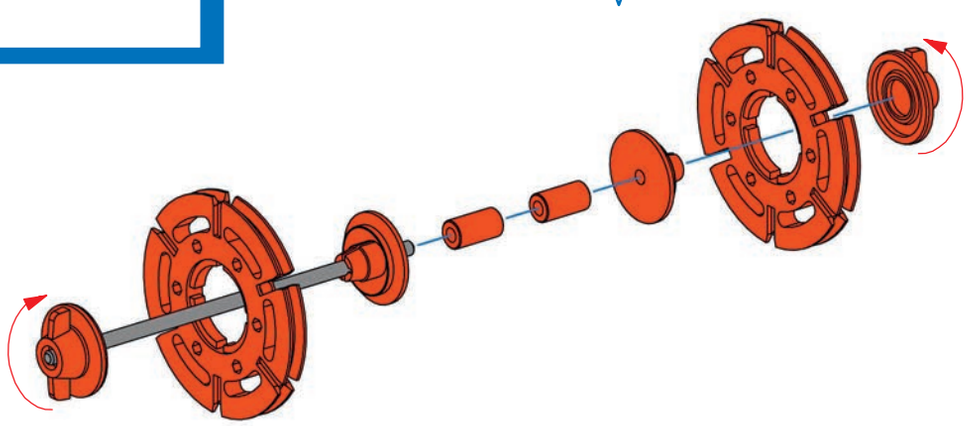

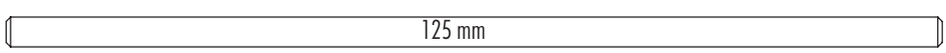

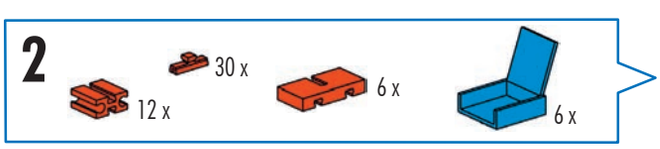

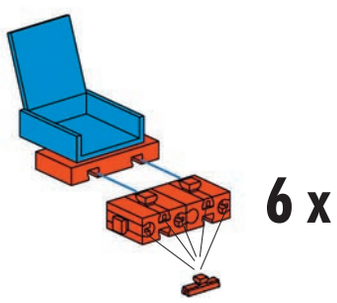

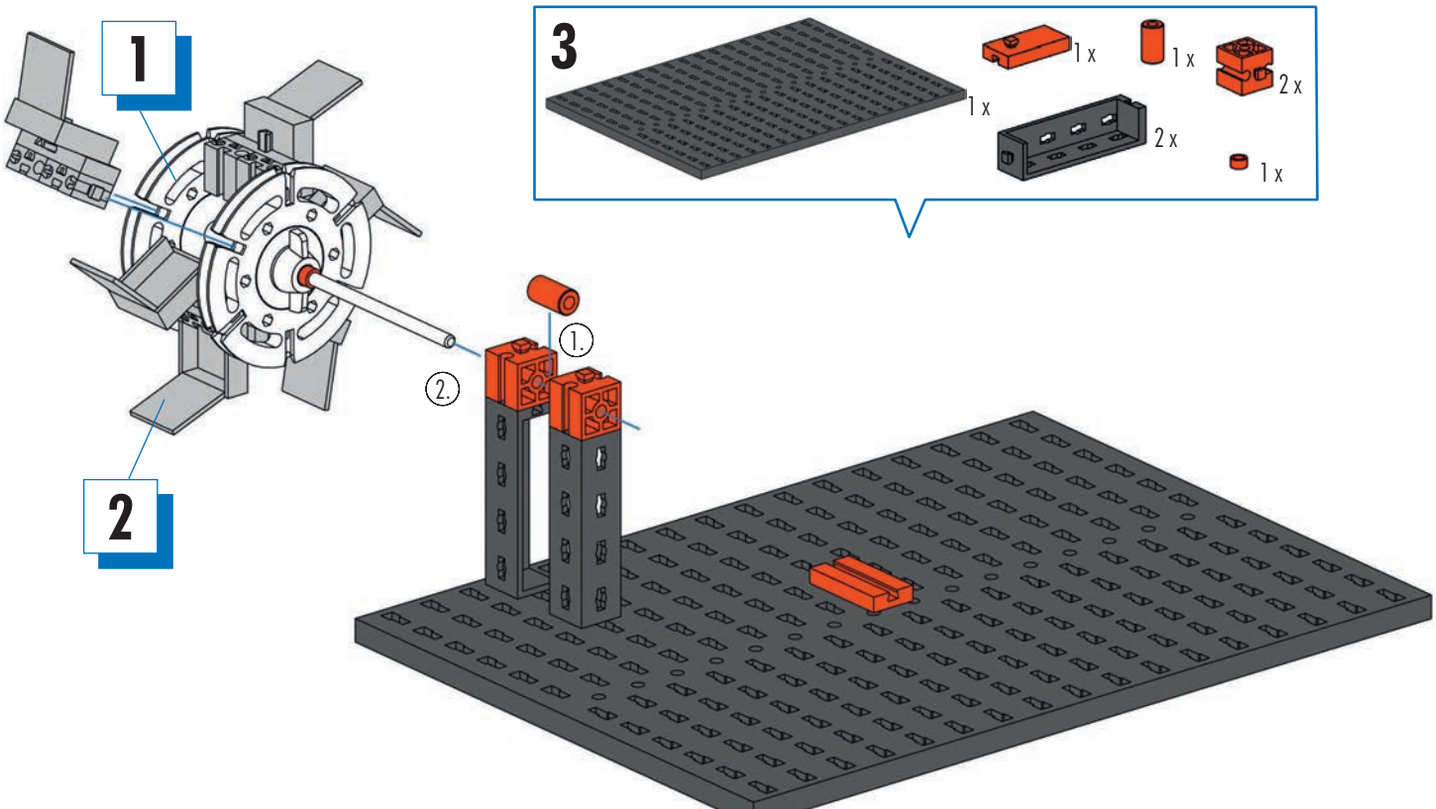

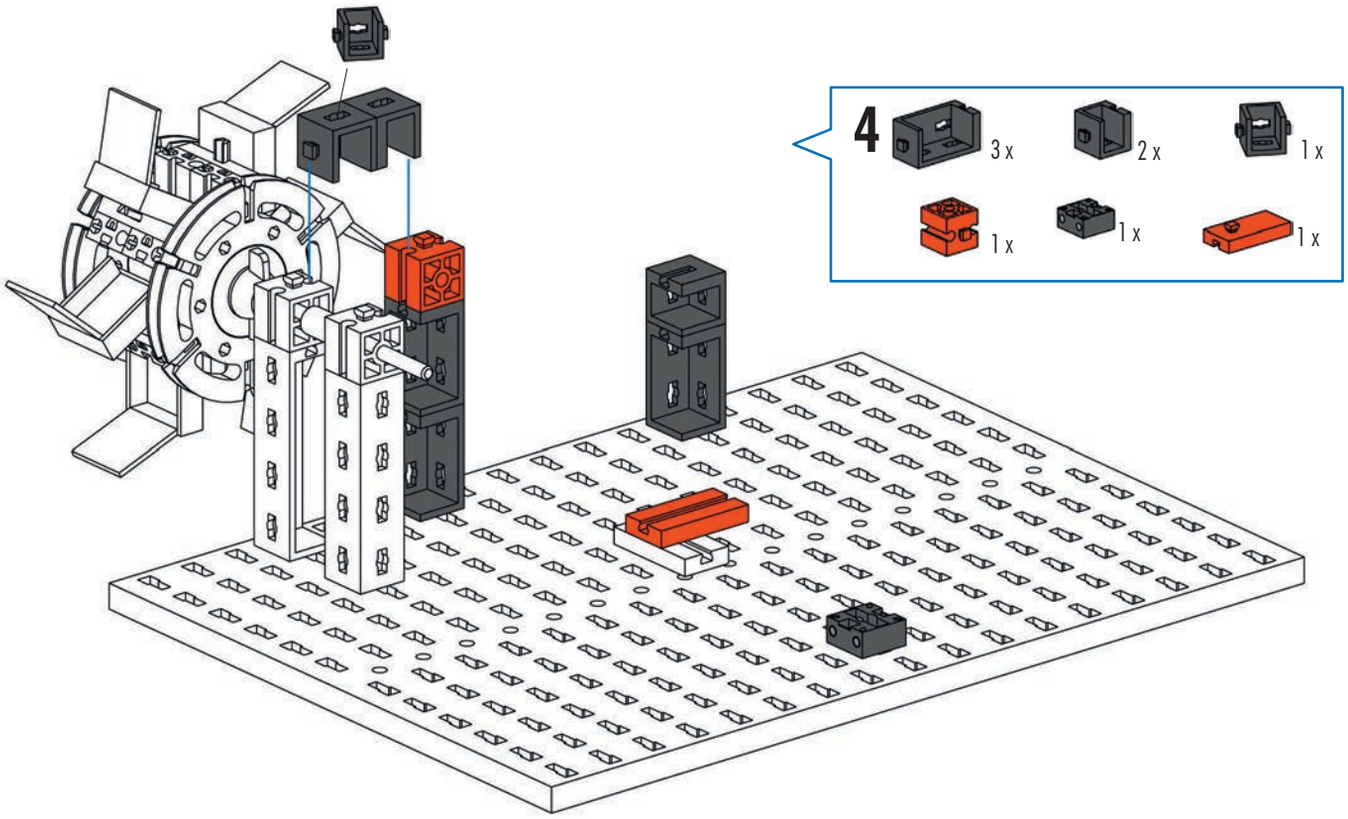
4
3 x
2 x
1 x
1 x
1 x
1 x

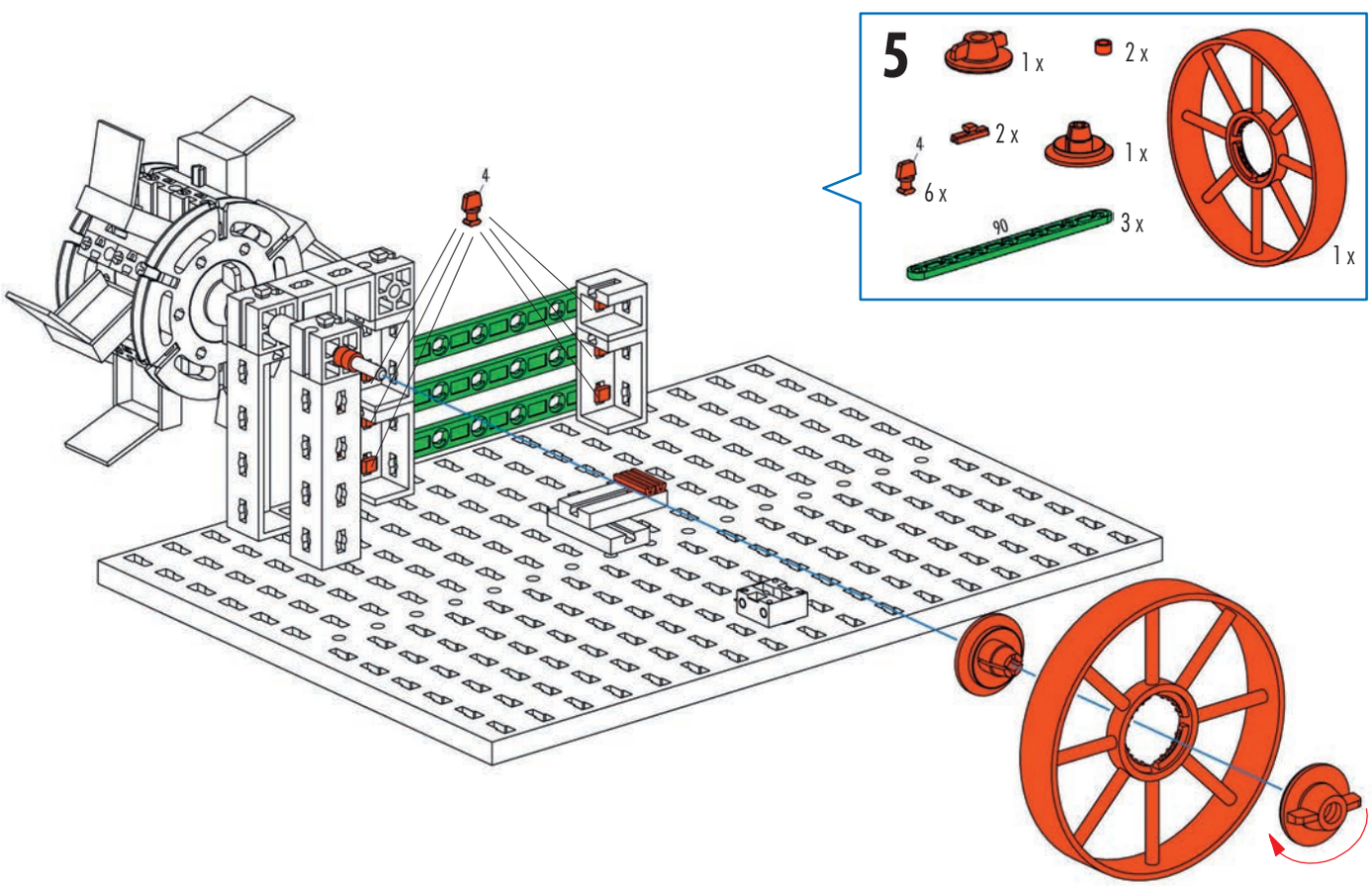
5
1 x
2 x
2 x
1 x
4
6 x
90
3 x
1 x
4

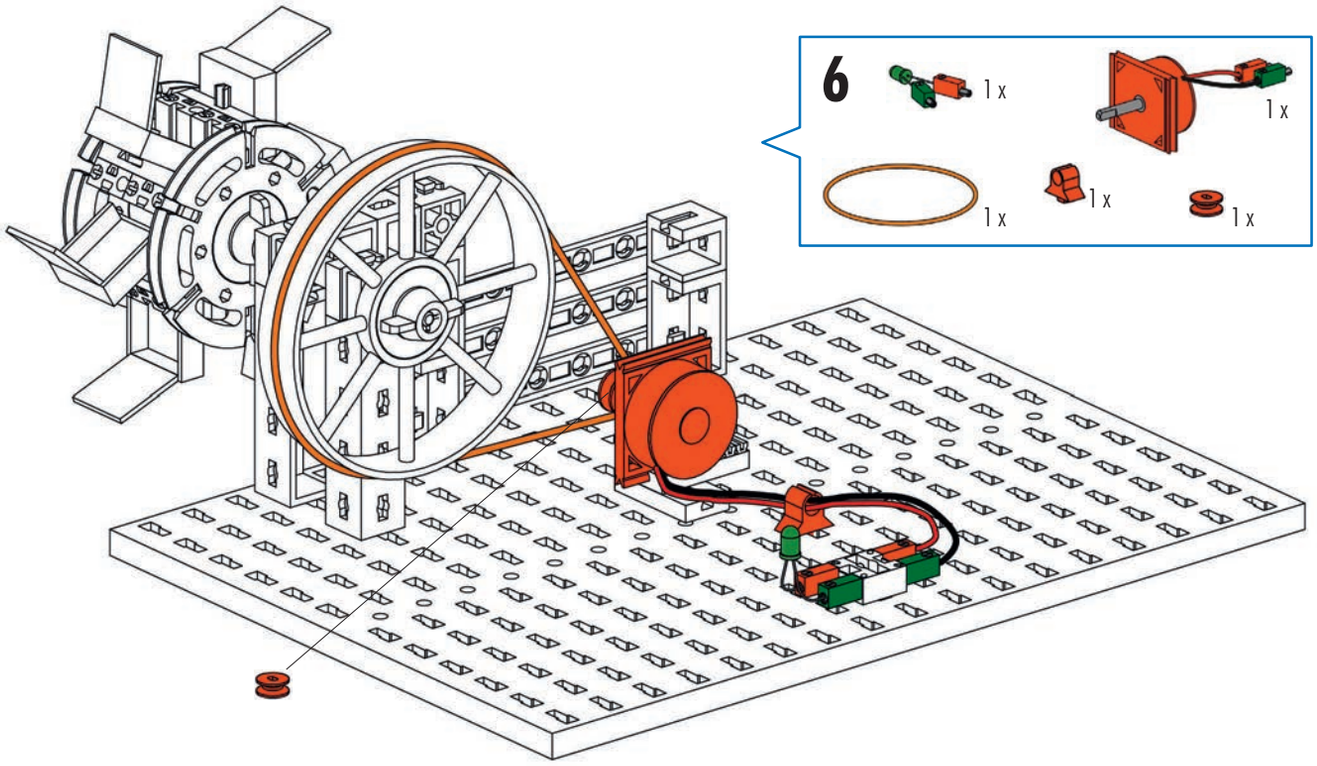
6
1 x
1 x
1 x
1 x
1 x

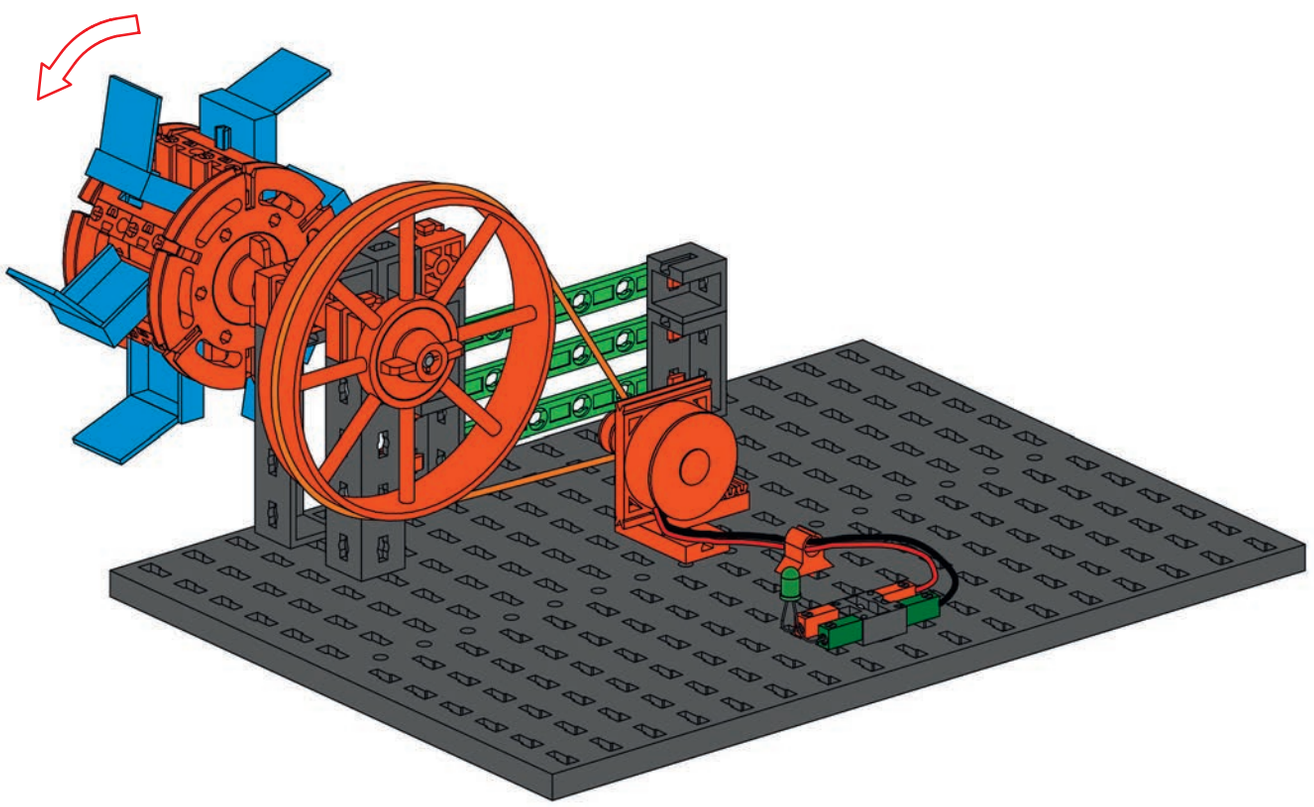

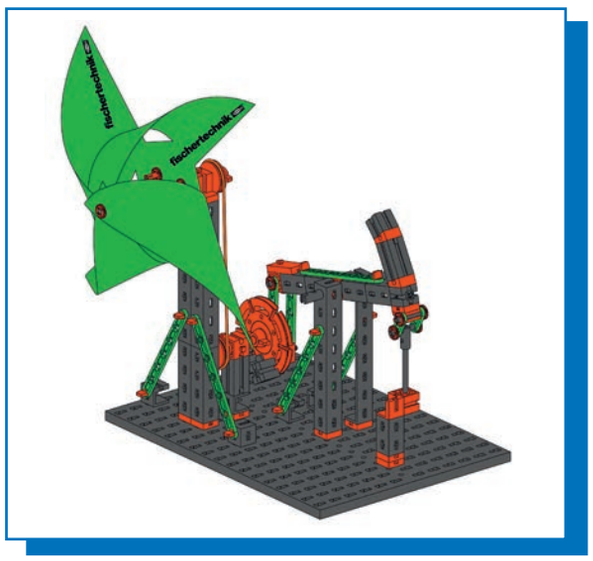

Windrad mit Pumpe
Windmill with pump
Roue éolienne avec pompe

Wieken met pomp
Rueda de viento con bomba
Turbina eólica com bomba

Pala eolica con pompa
Ветряное колесо с насосом
风车和泵

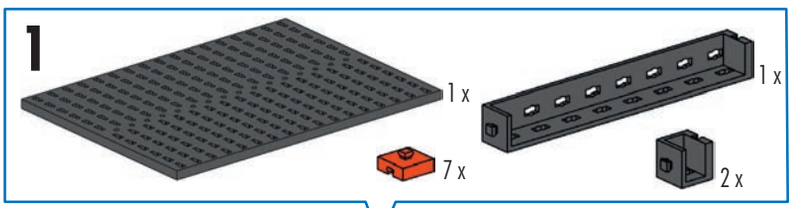

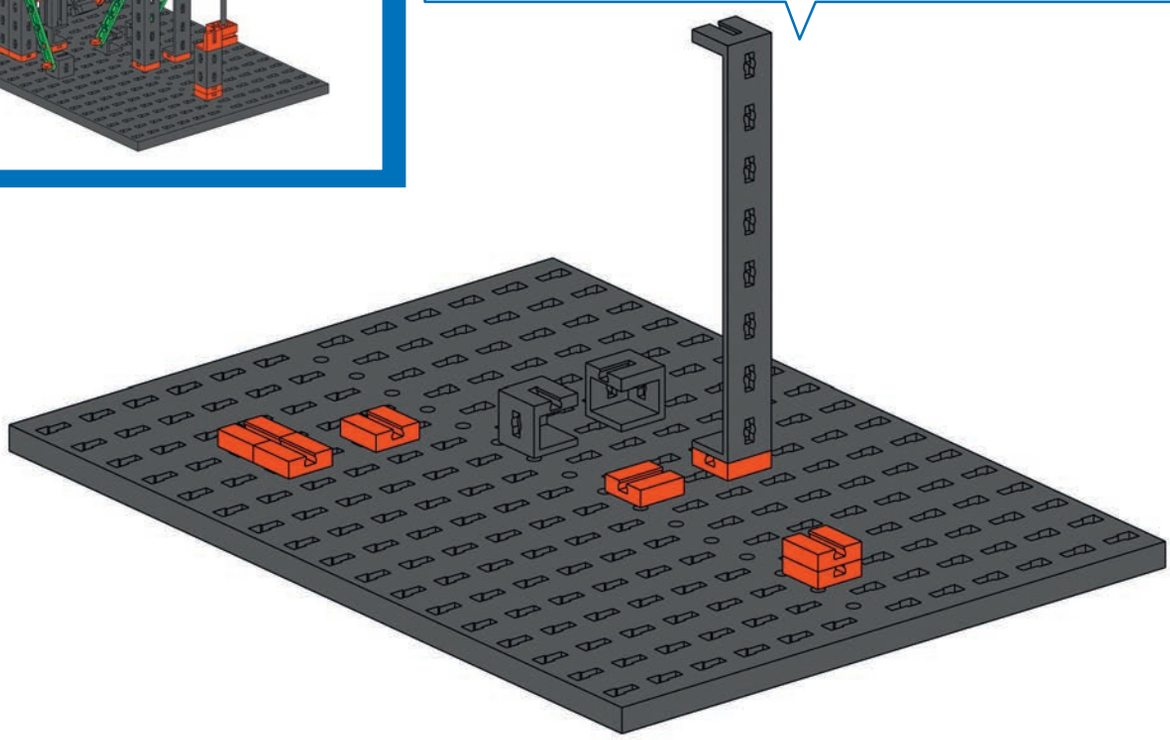

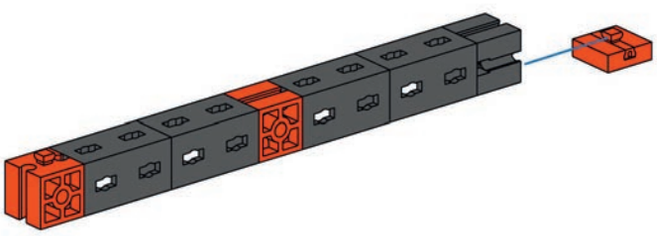

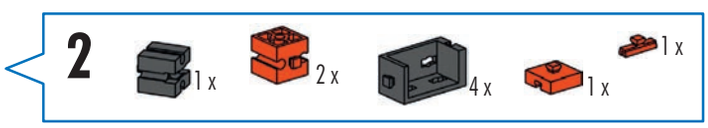

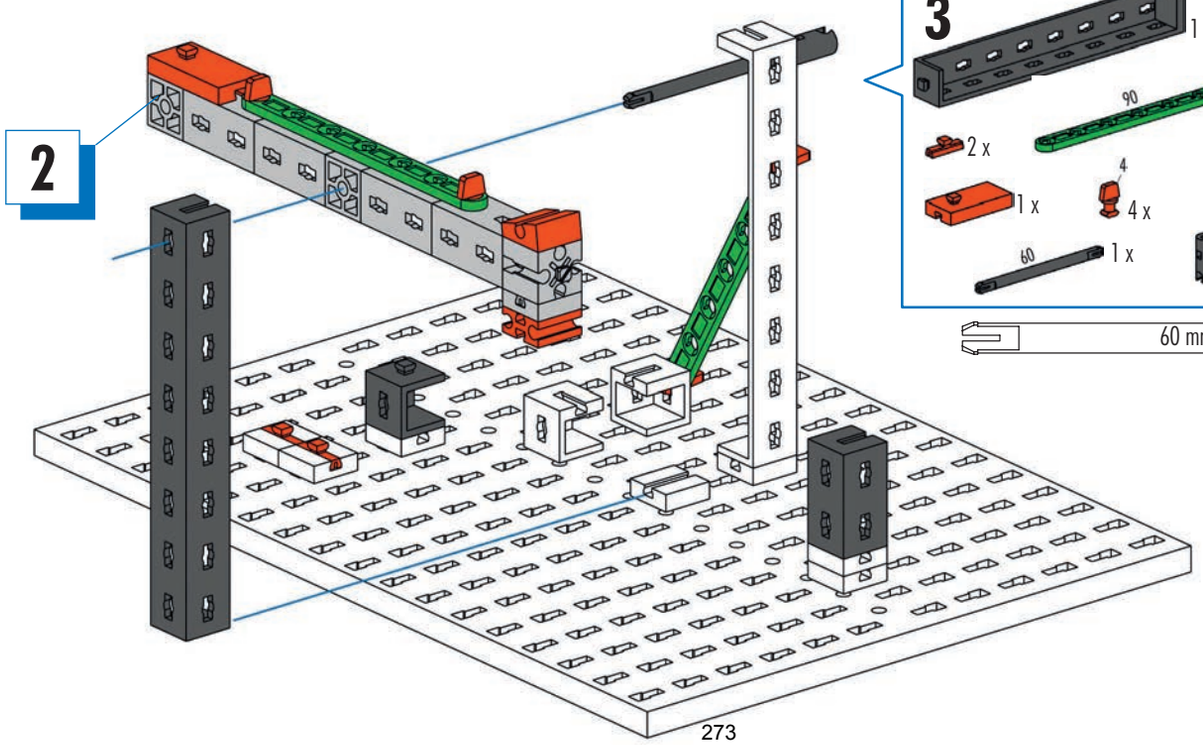

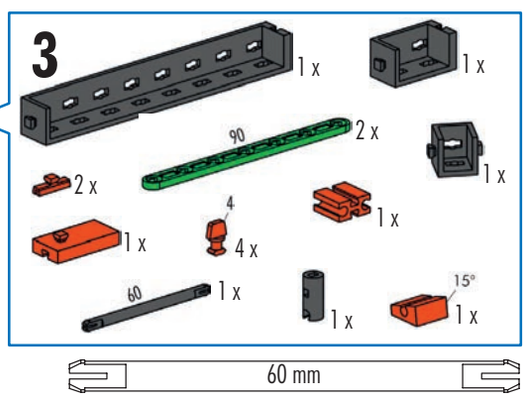

273

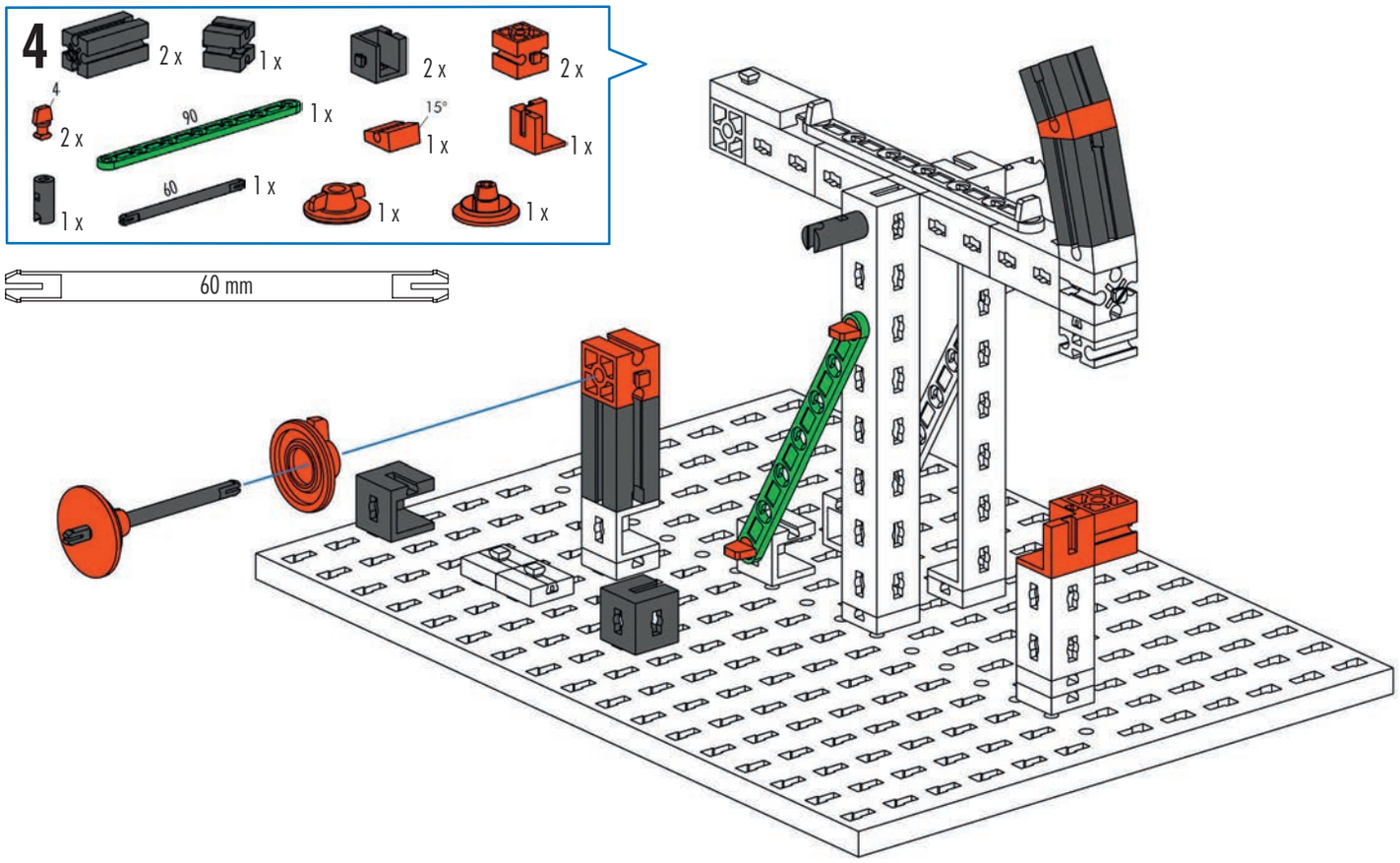
4
2 x
1 x
2 x
2 x
4
2 x
90
1 x
15°
1 x
1 x
1 x
60
1 x
1 x
1 x
60 mm

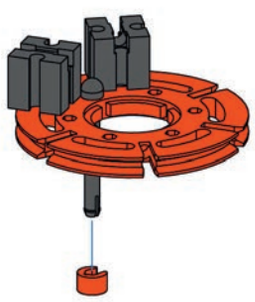

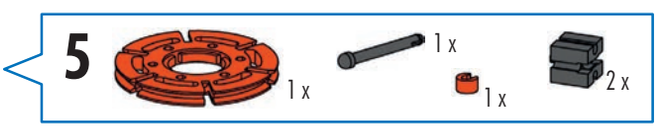
5
1 x
1 x
1 x
2 x

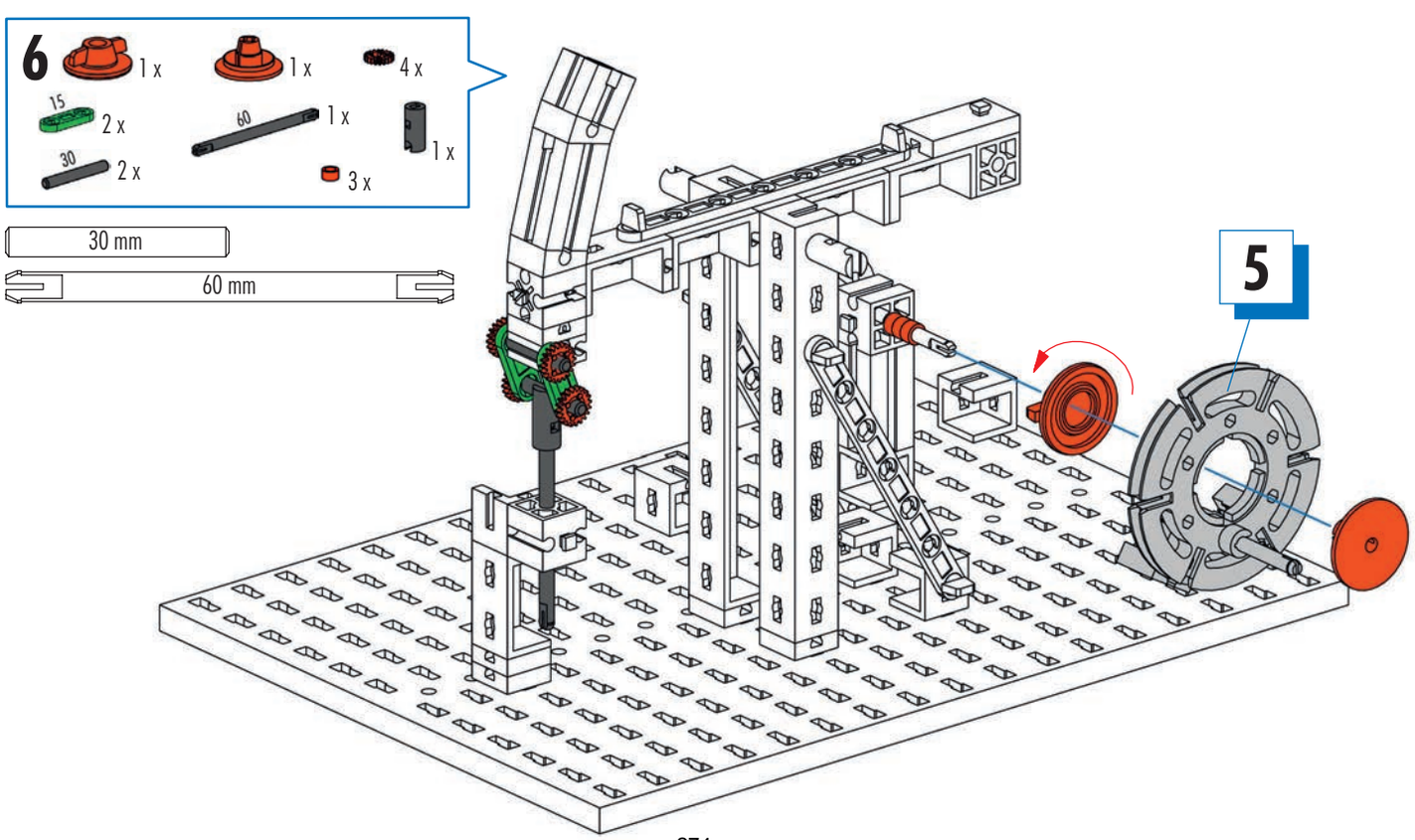
6
1 x
1 x
4 x
15
2 x
60
1 x
1 x
30
2 x
3 x
30 mm
60 mm
5

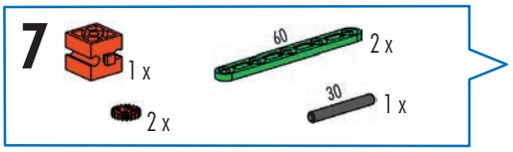

30 mm

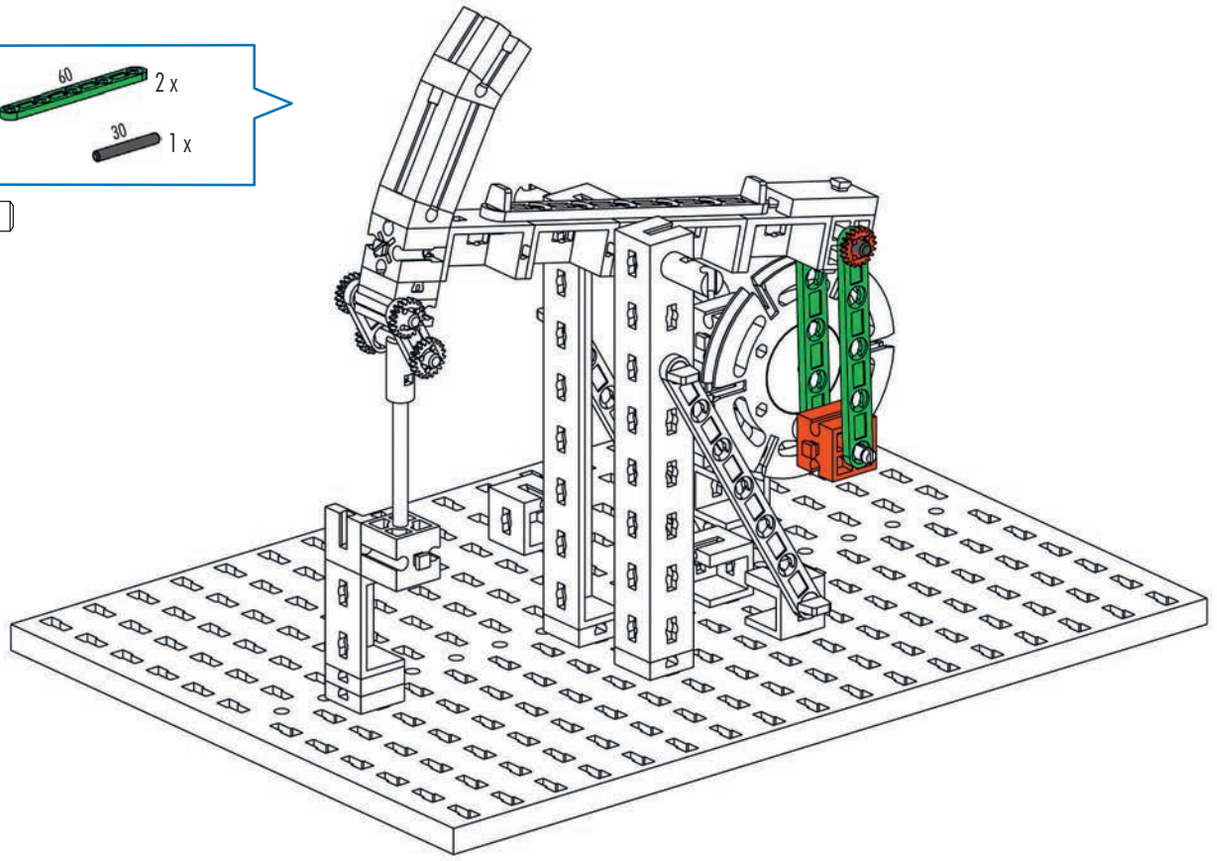

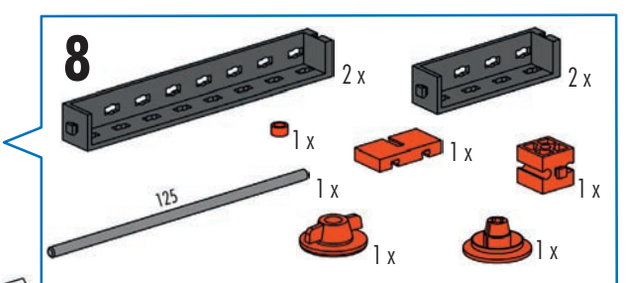

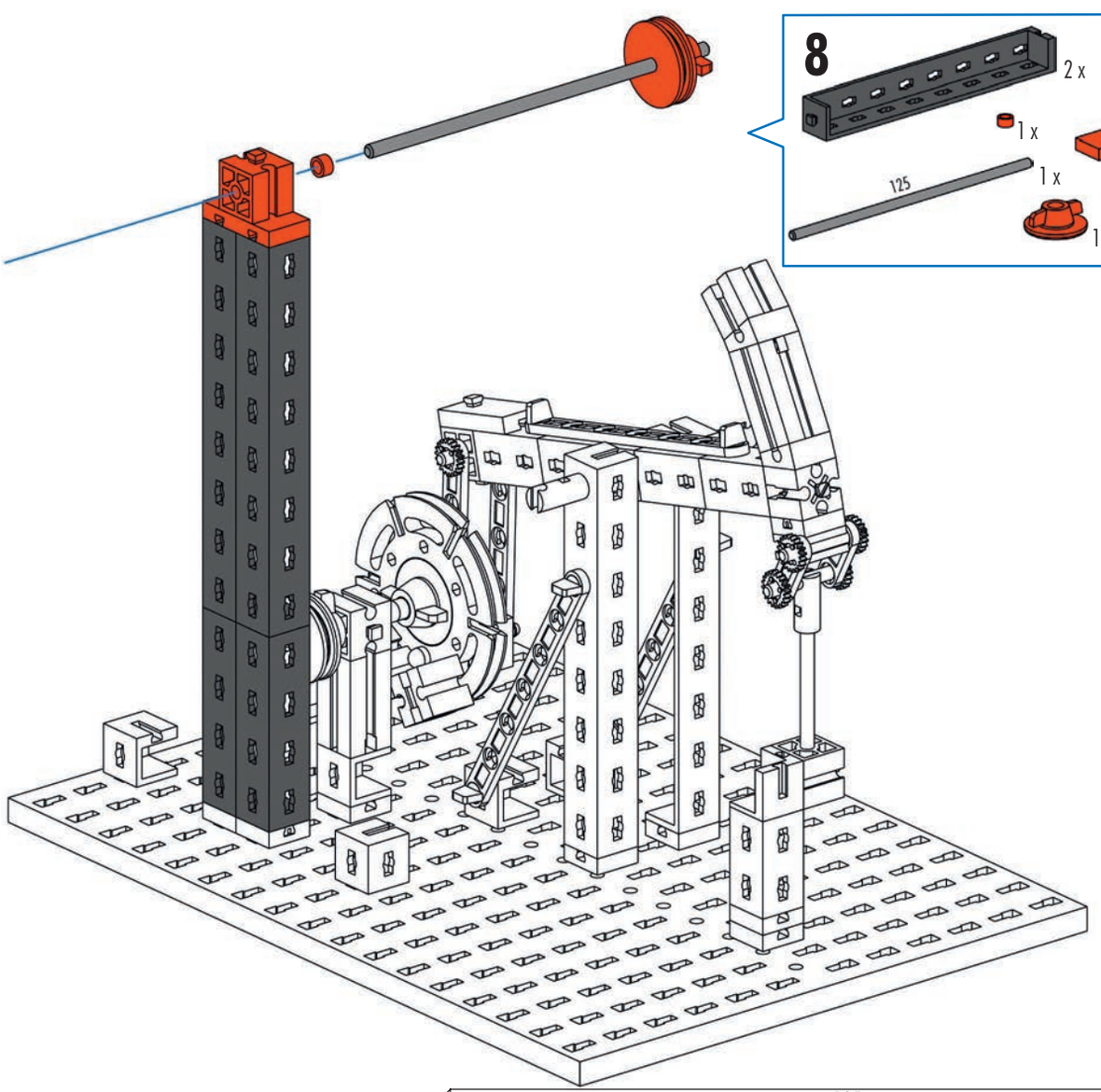

125 mm

275

9

1 x

2 x

1 x

1 x

1 x

3 x

2 x

4 x

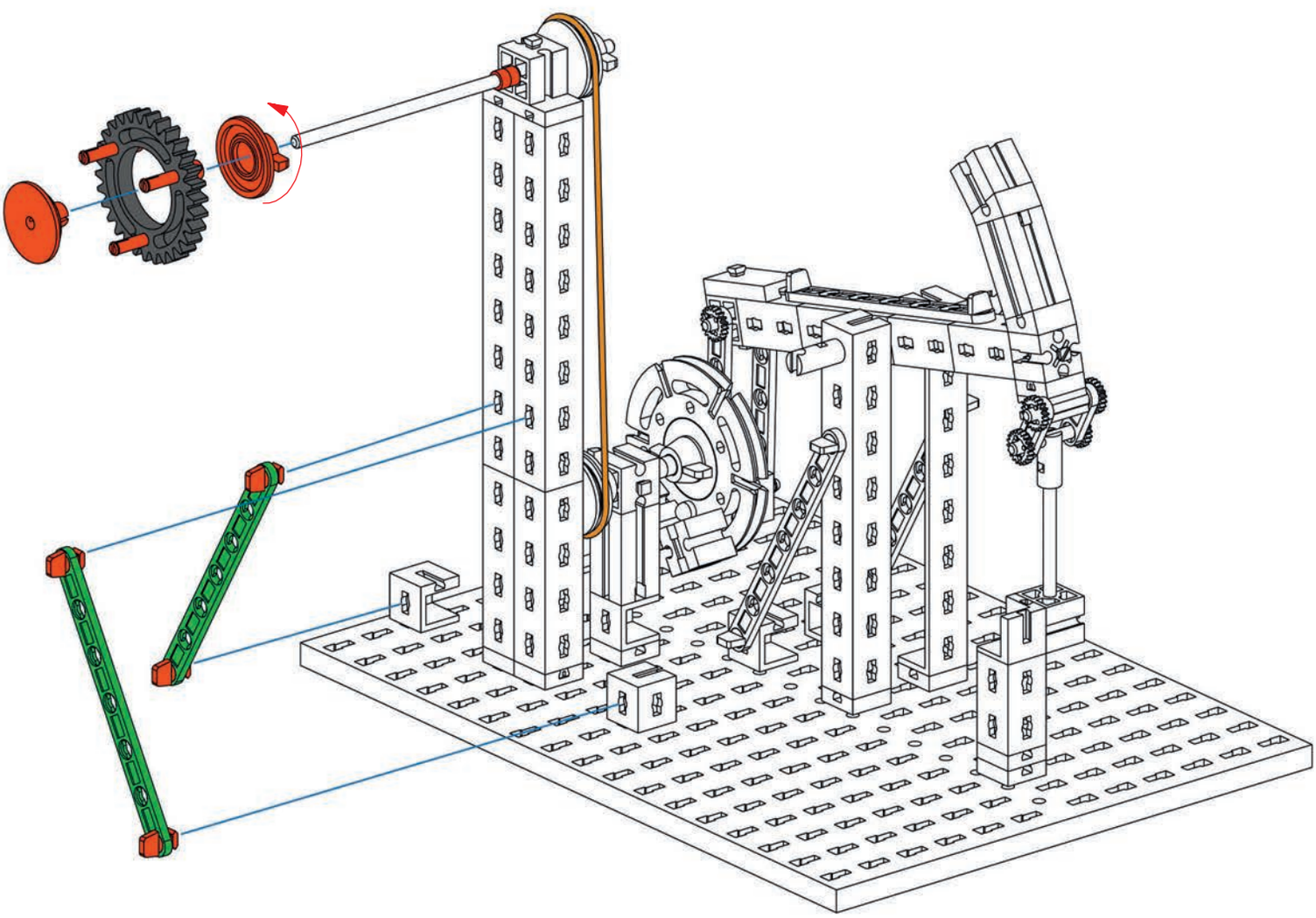

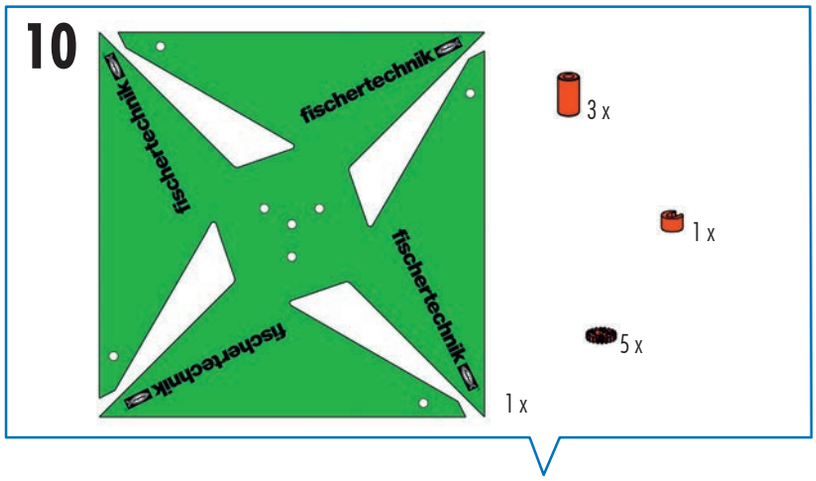
10
fischertechnik
fischertechnik
fischertechnik
fischertechnik
3 x
1 x
5 x
1 x

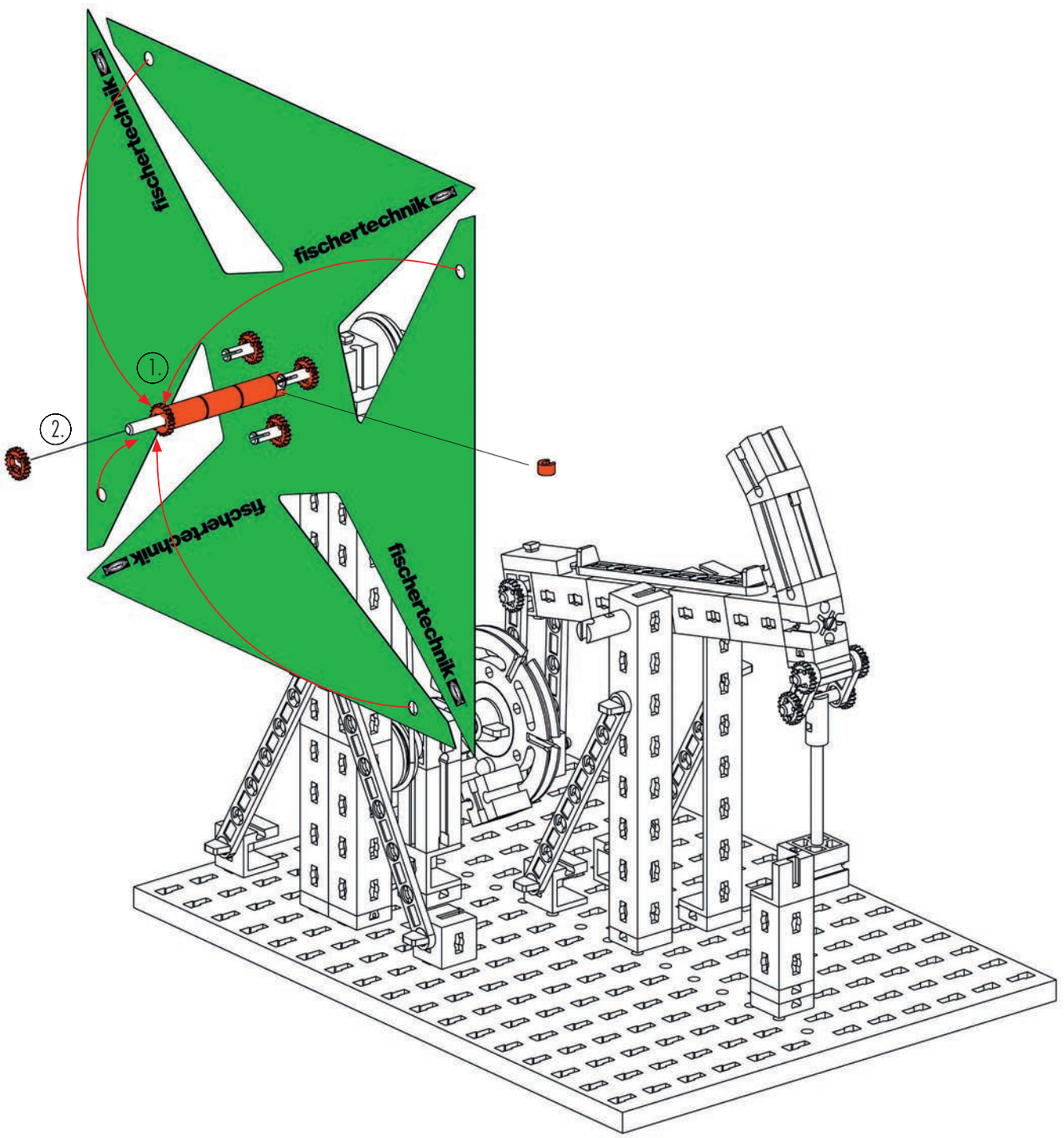
fischertechnik
fischertechnik
fischertechnik
fischertechnik
1.
2.

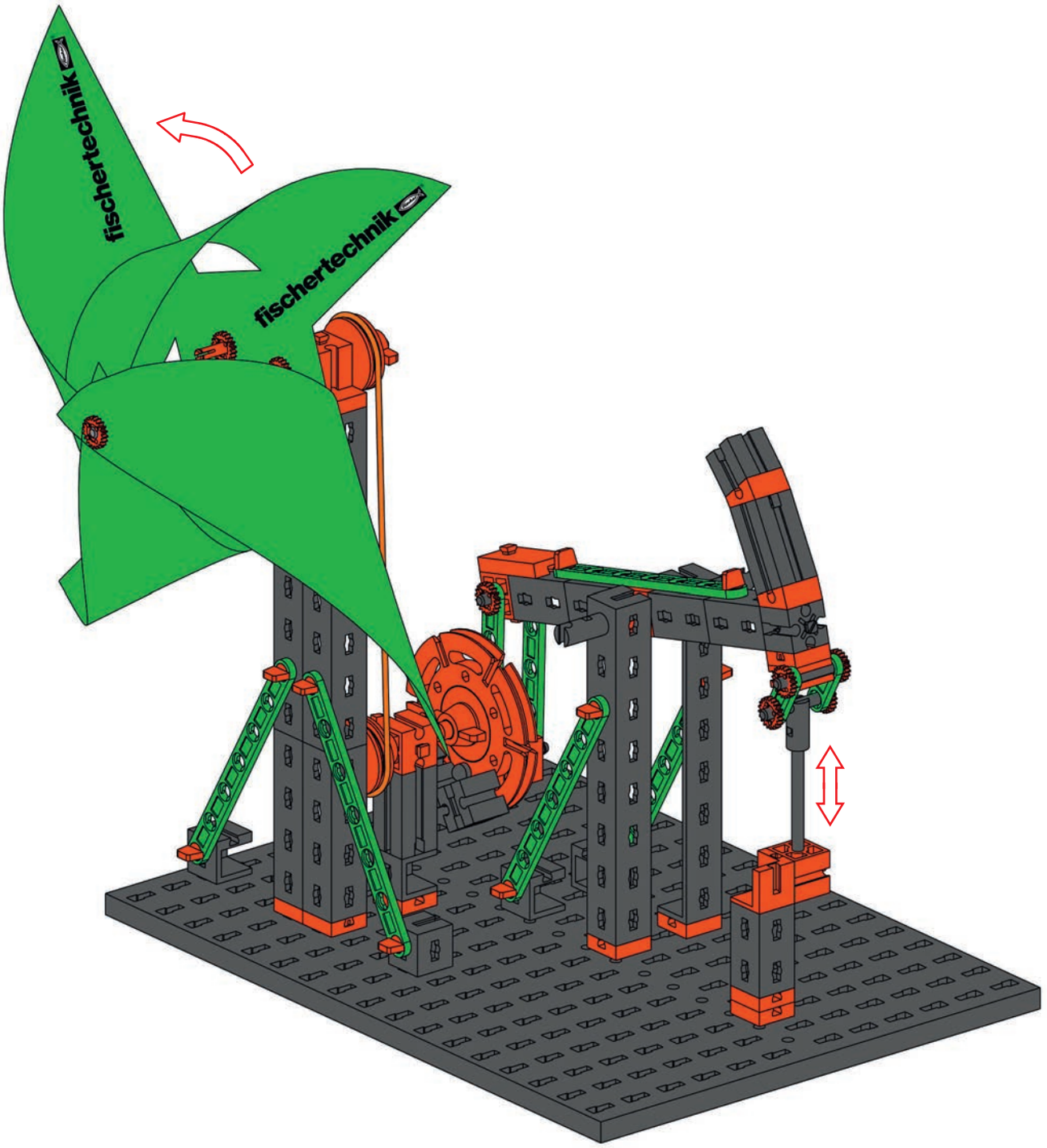
fischertechnik
fischertechnik

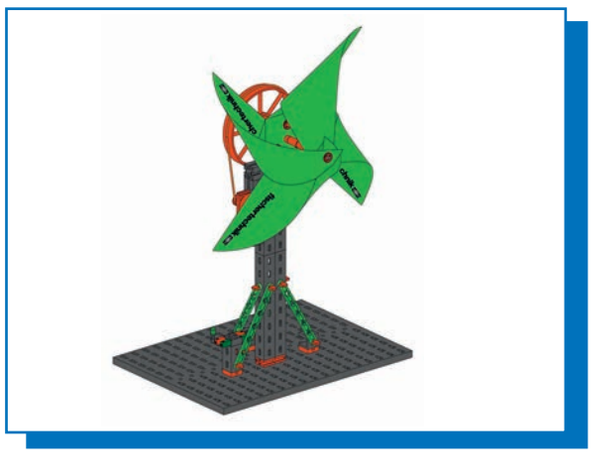

Windkraftanlage
Windpower Station
Éolienne
Windkrachtinstallatie
Instalación eólica
Estación eólica
Impianto eolico
Ветросиловая установка
风力发电机

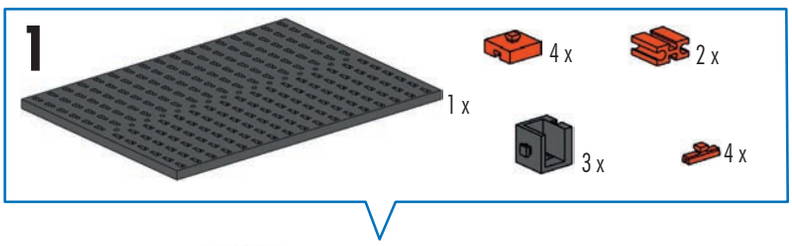

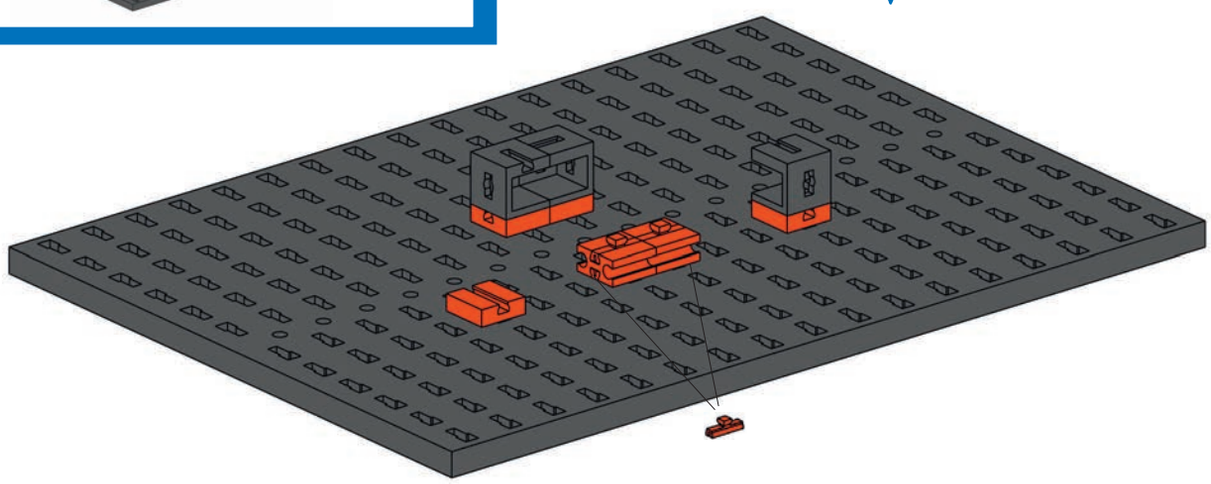

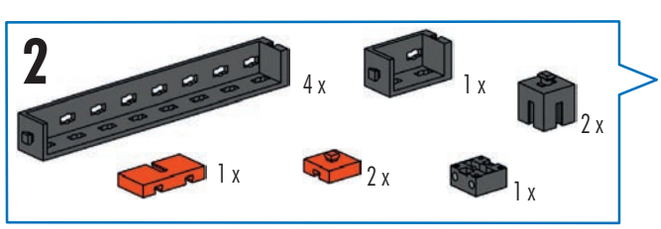

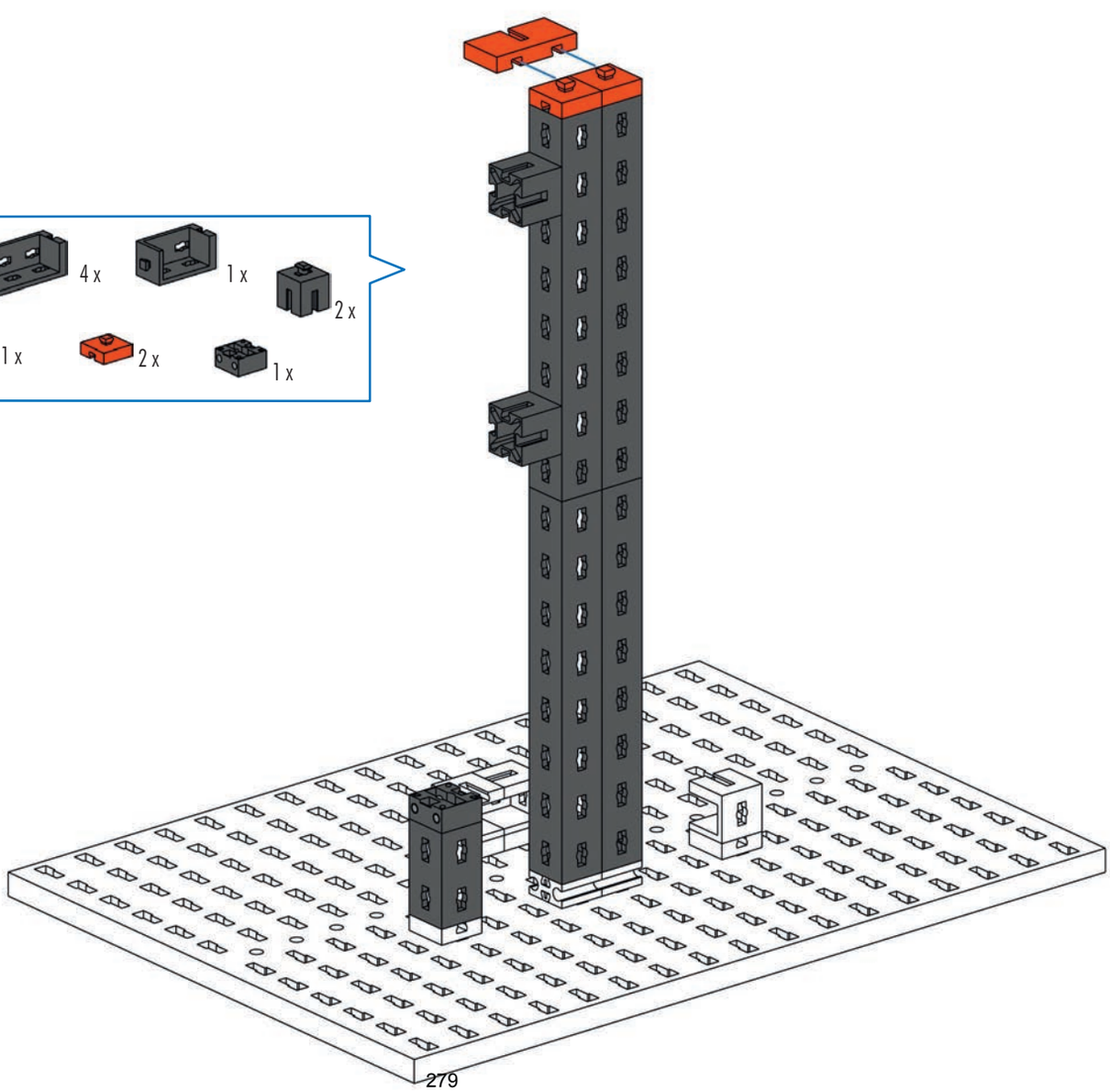

279

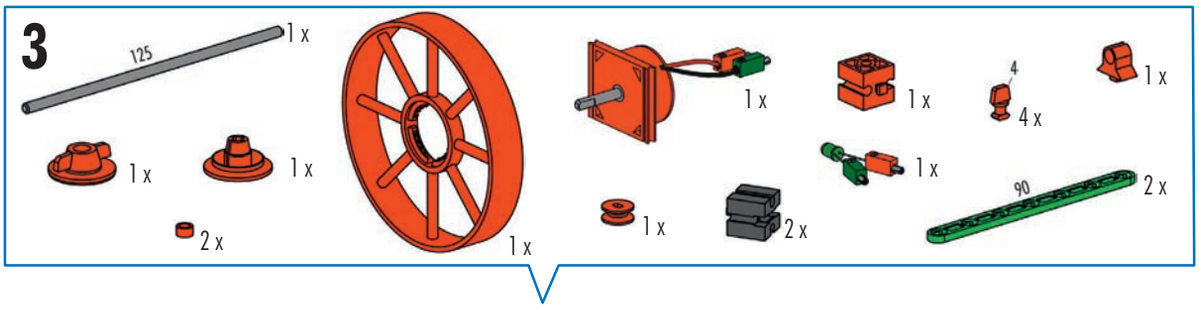

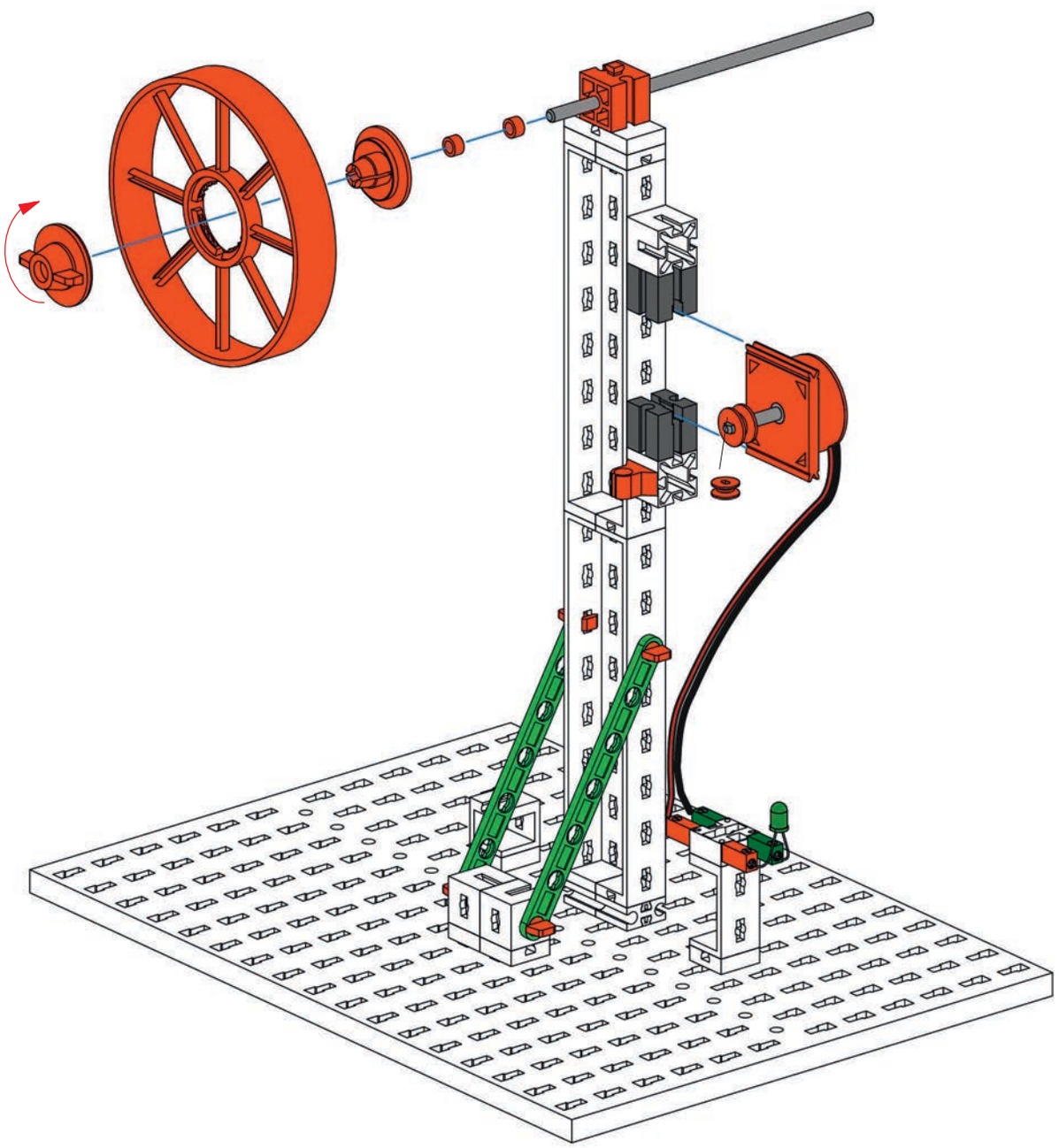

125 mm

4

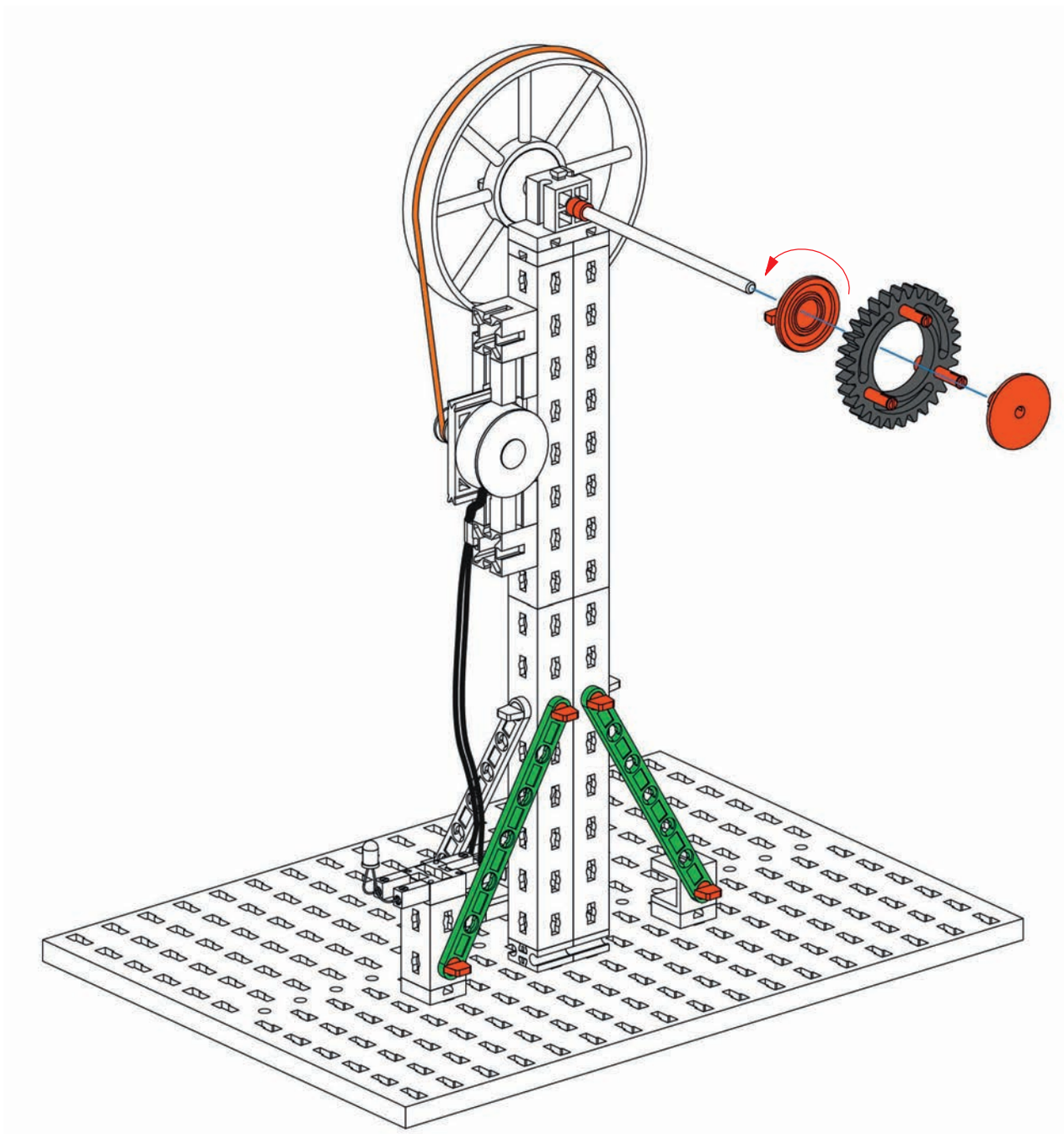

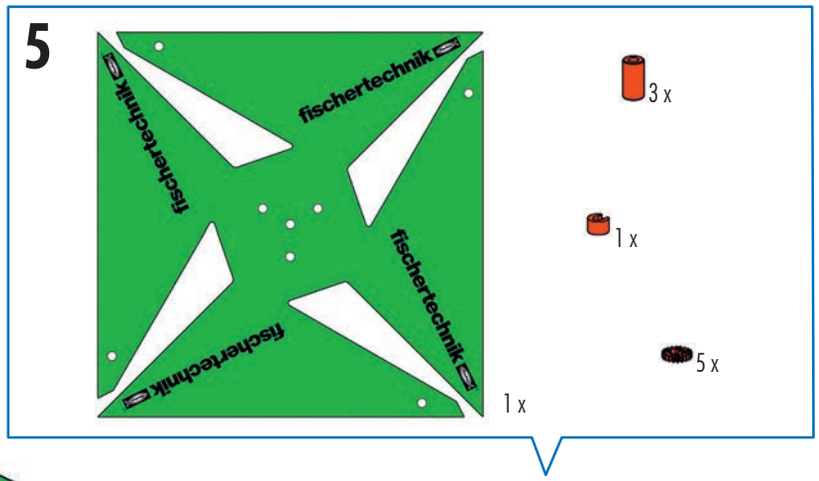
5
fischertechnik
3 x
1 x
5 x
1 x

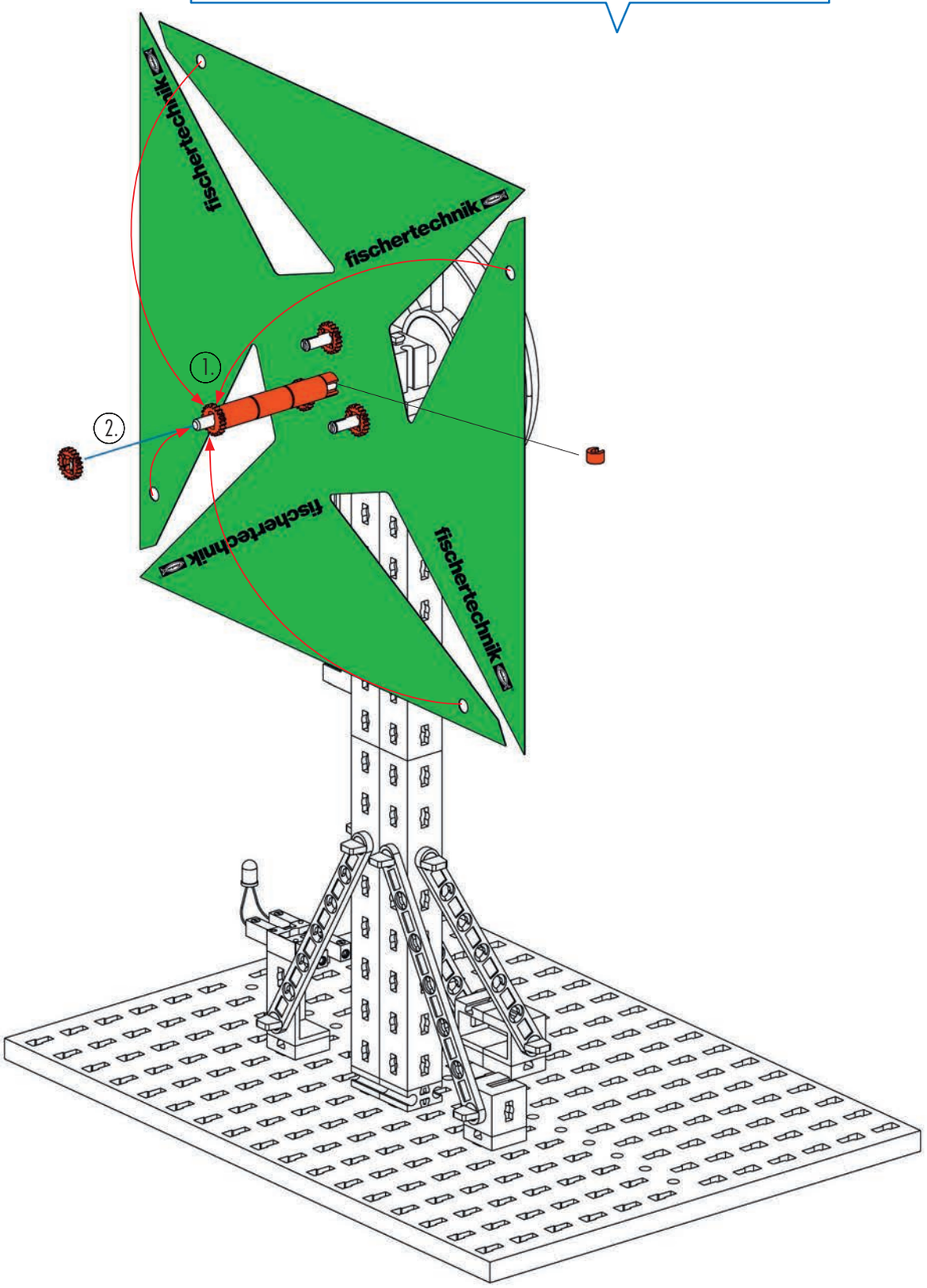
fischertechnik
1.
2.

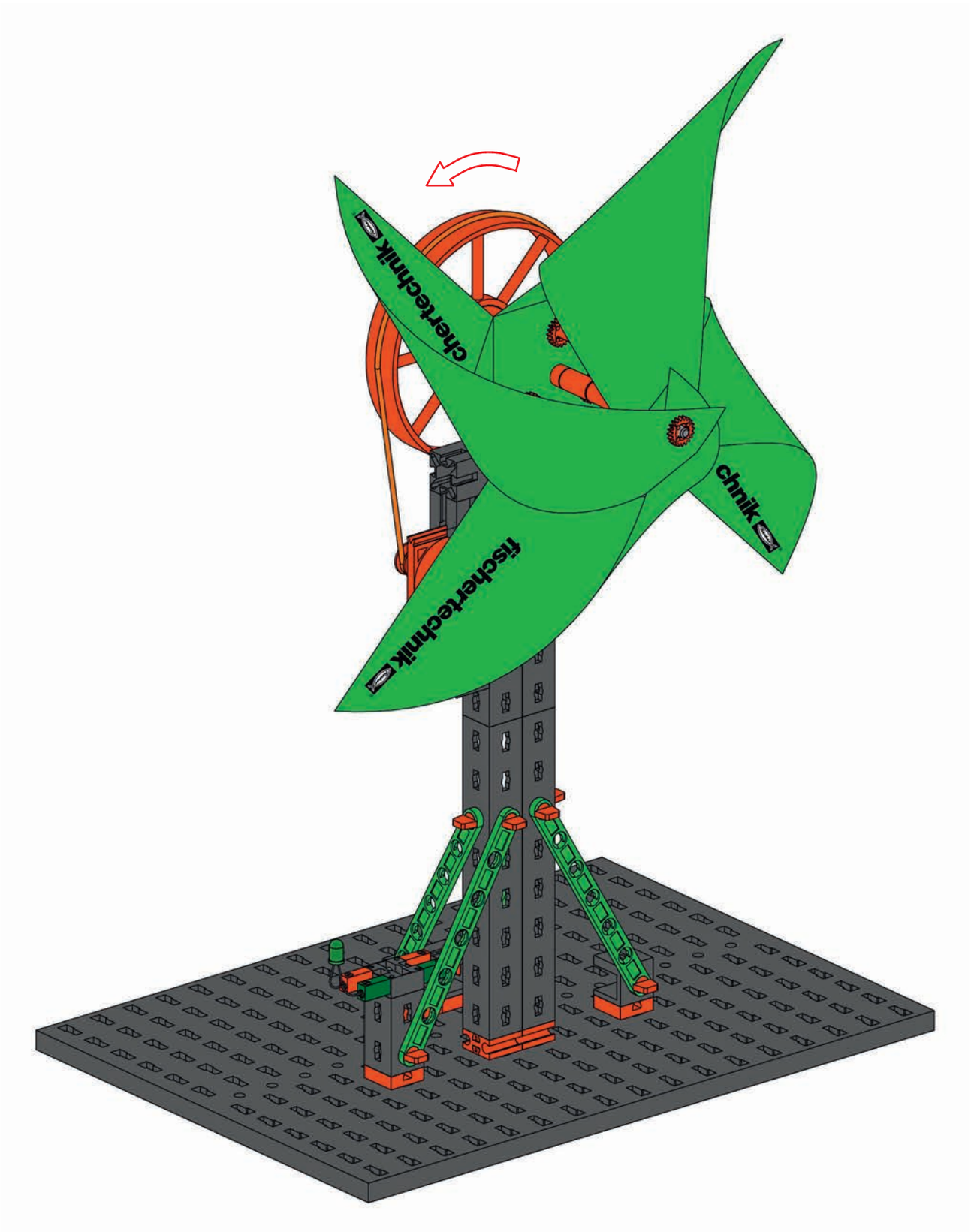
chnik
fischertechnik
chertechnik

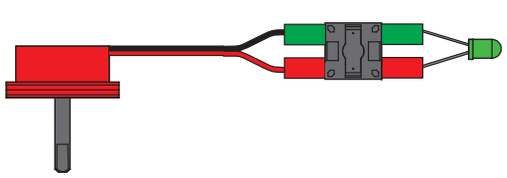

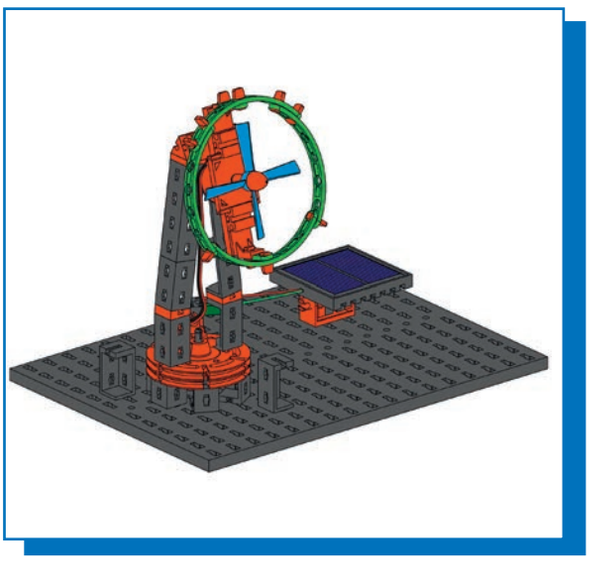

Ventilator
Ventilating fan
Ventilateur

Ventilator
Ventilador
Ventilador

Ventola
Вентилятор
风扇

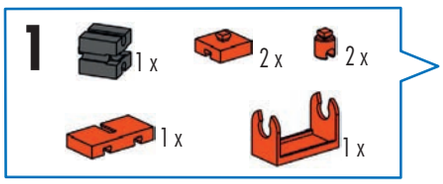

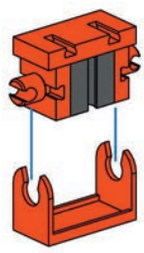

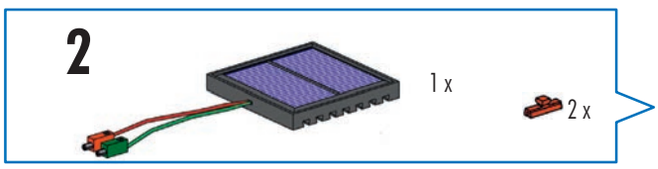

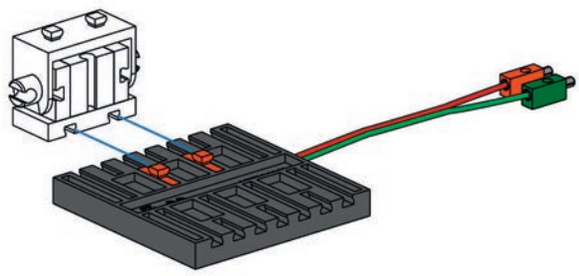

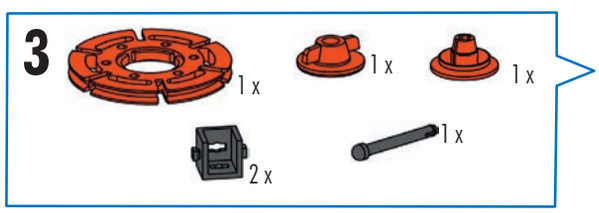

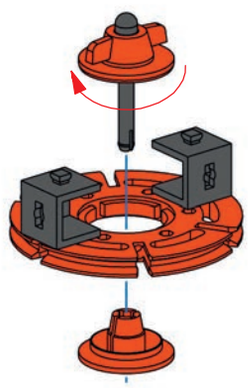

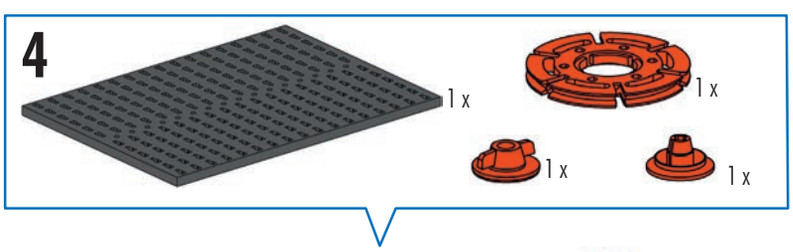

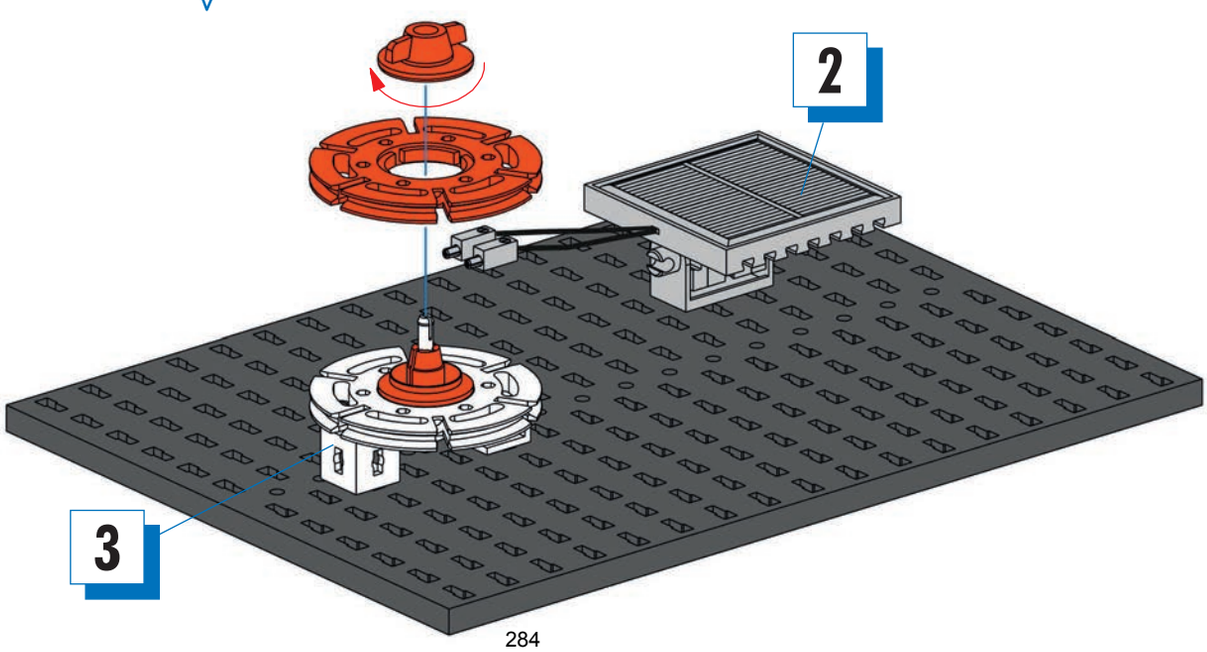

284

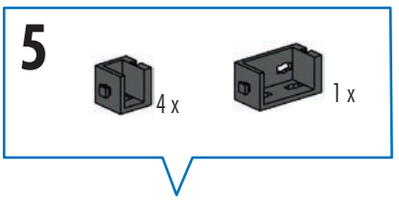
5
4 x
1 x

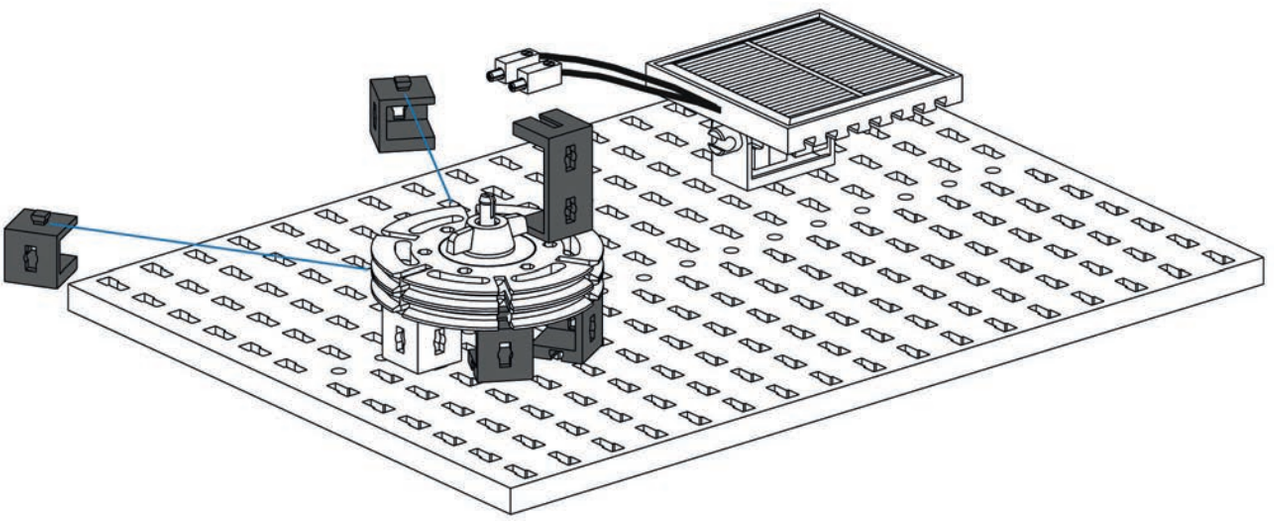

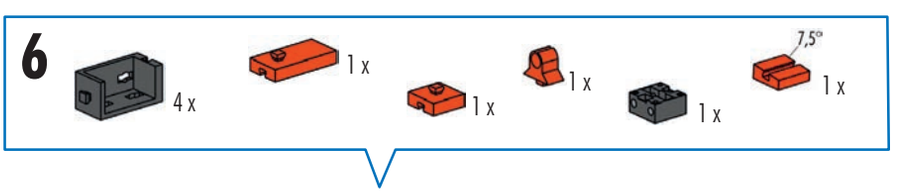
6
4 x
1 x
1 x
1 x
1 x
7,5°

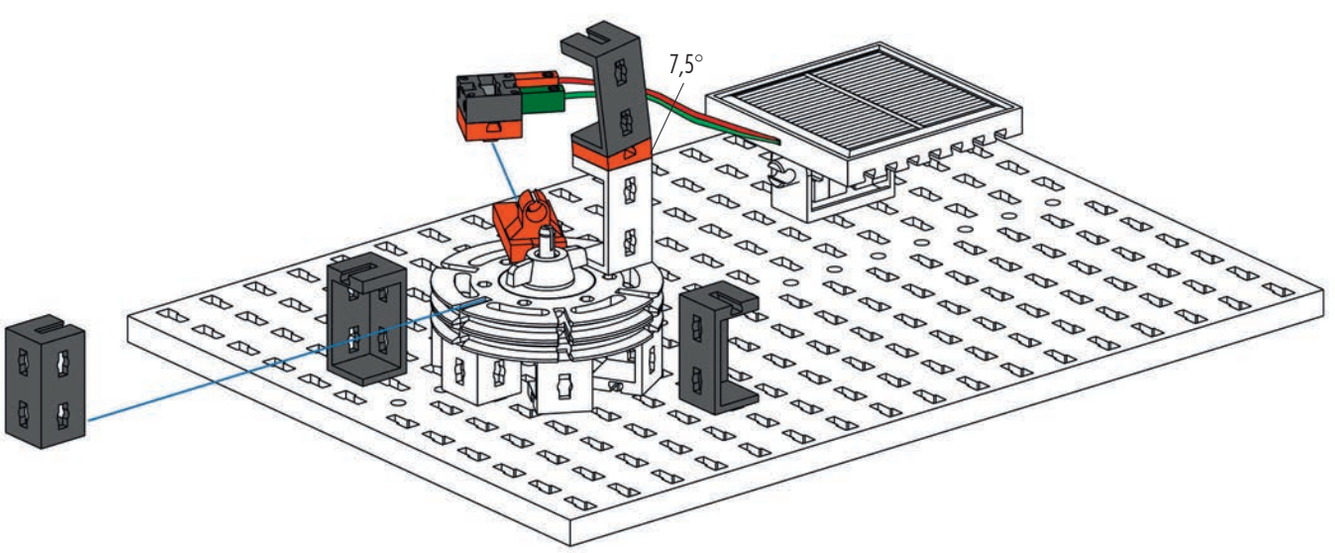
7,5°

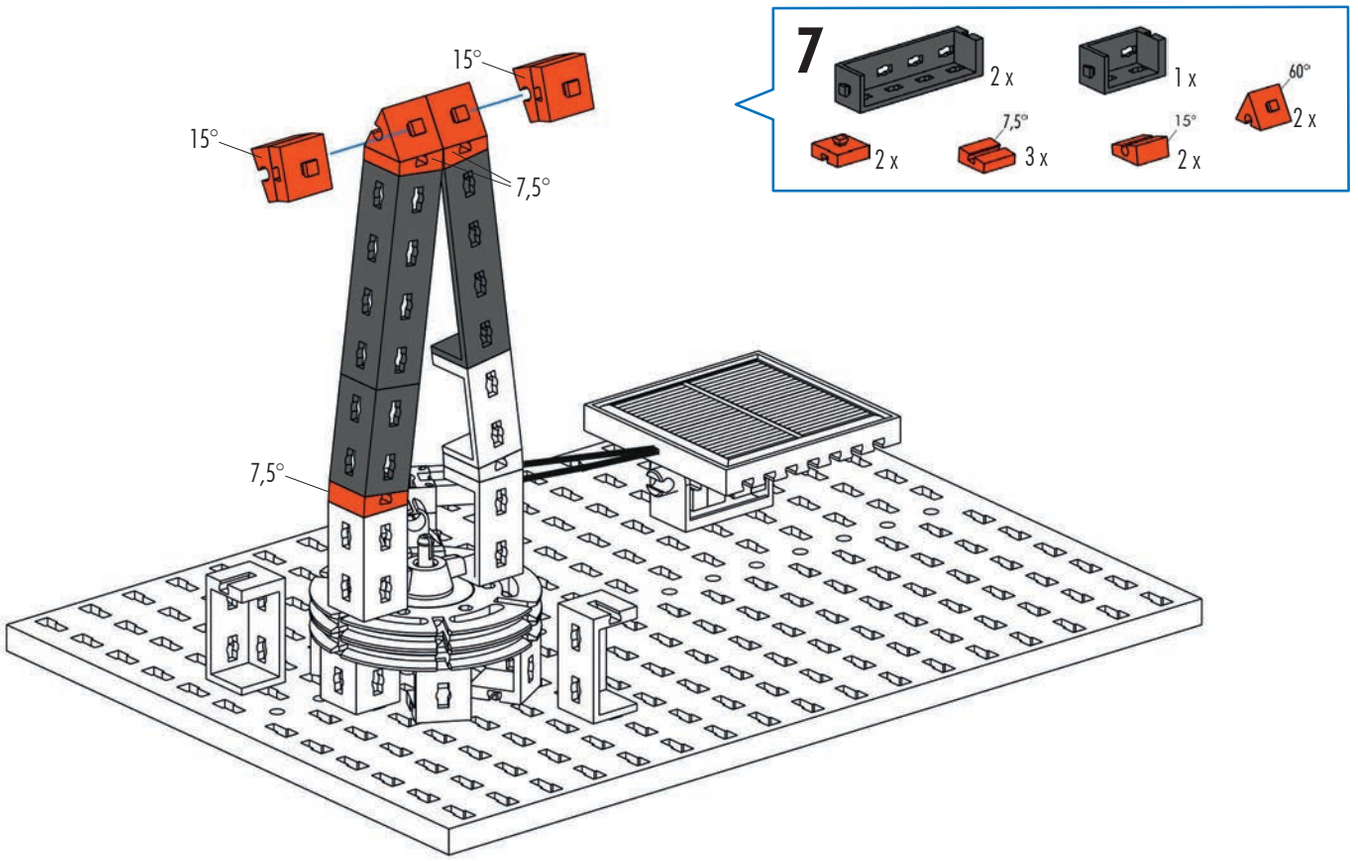
7
2 x
1 x
60°
2 x
2 x
7,5°
3 x
15°
2 x
15°
15°
7,5°
7,5°

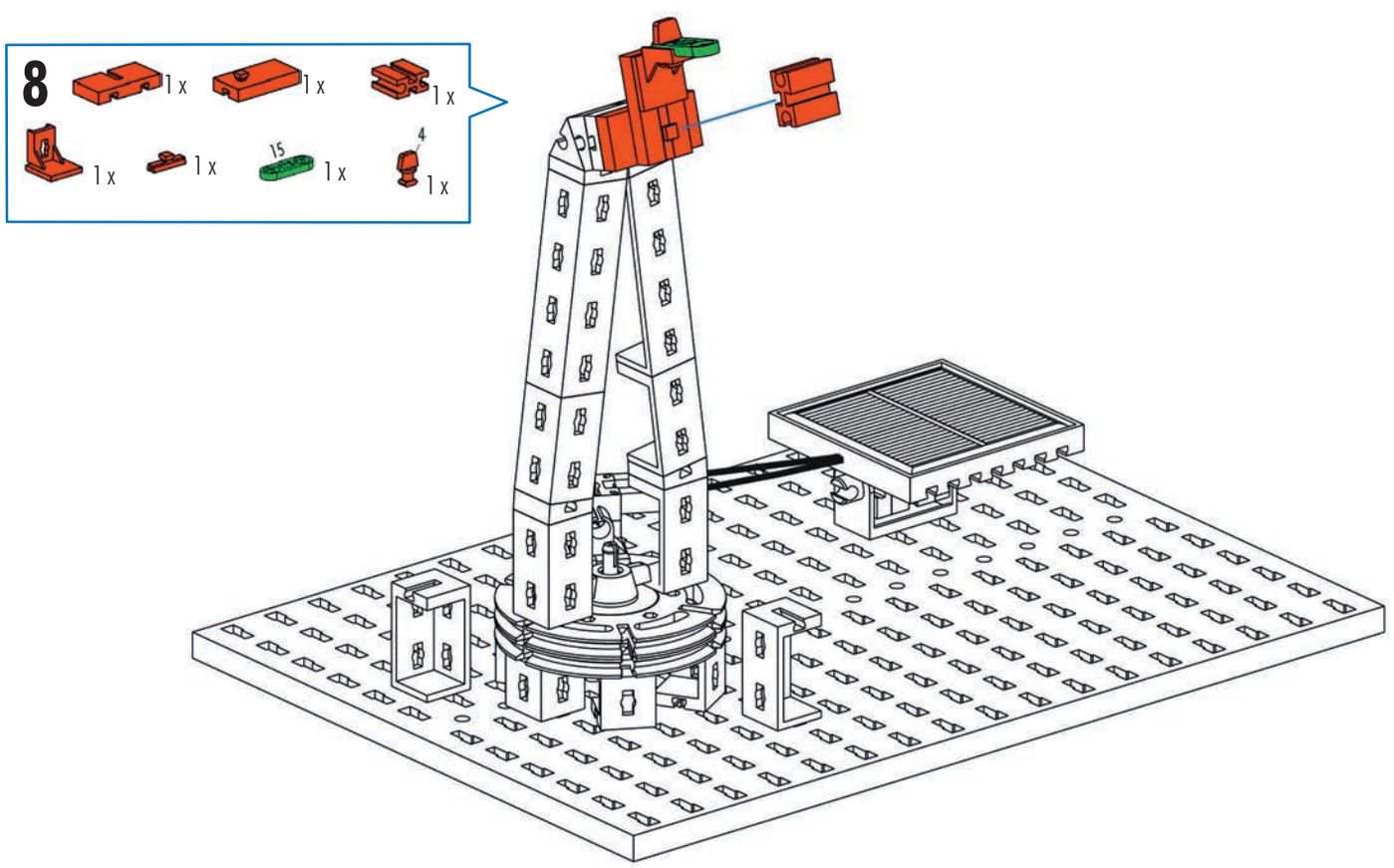
8
1 x
1 x
1 x
1 x
1 x
15
1 x
4
1 x

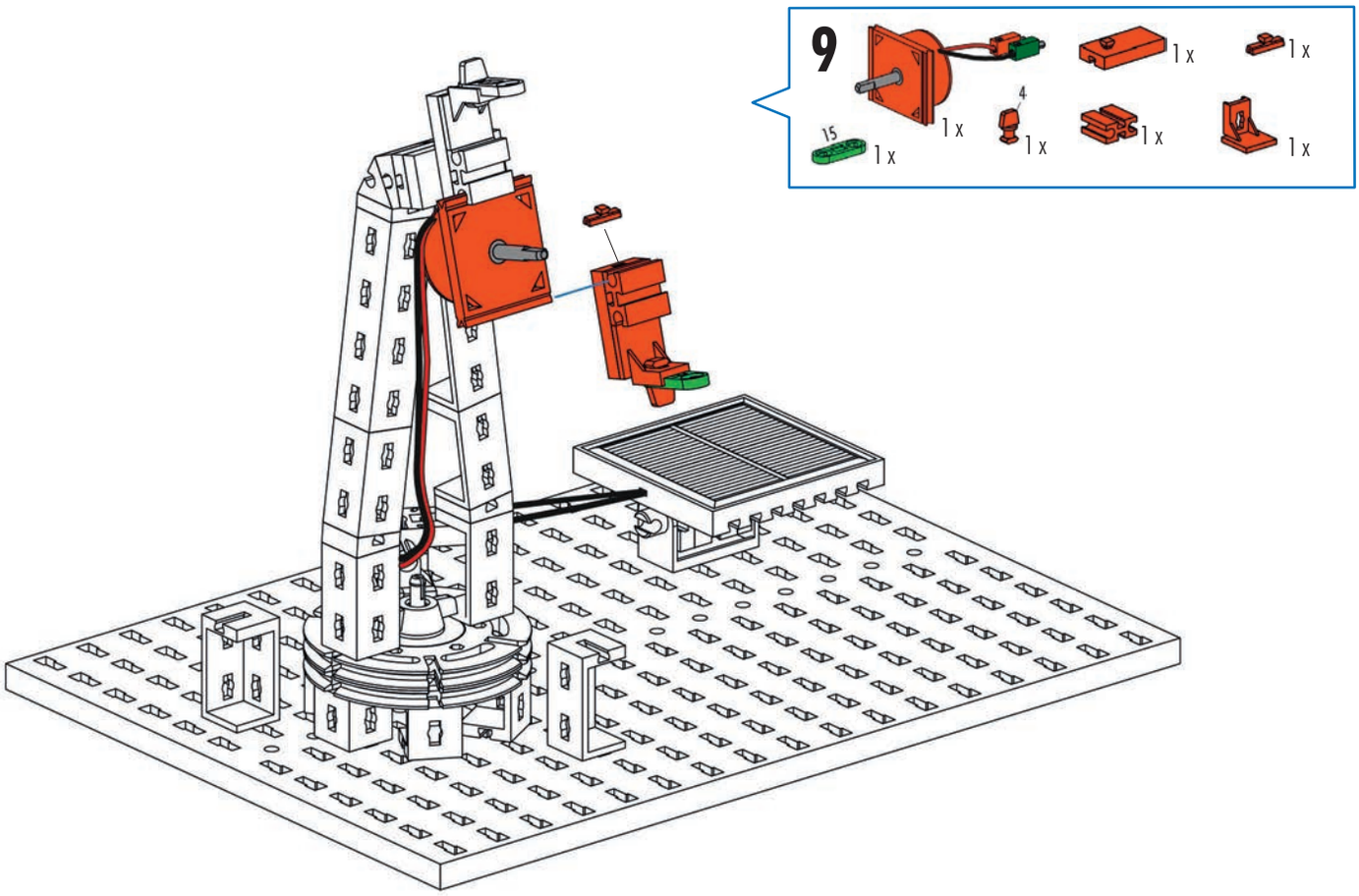
9
1 x
1 x
1 x
4
1 x
1 x
15
1 x
1 x

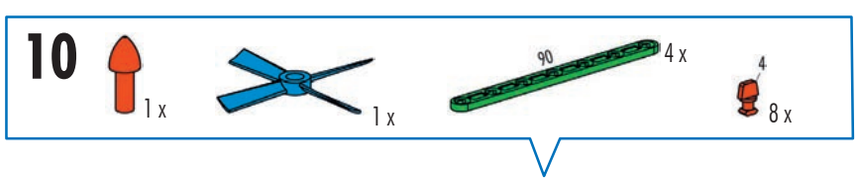
10
1 x
1 x
90
4 x
4
8 x

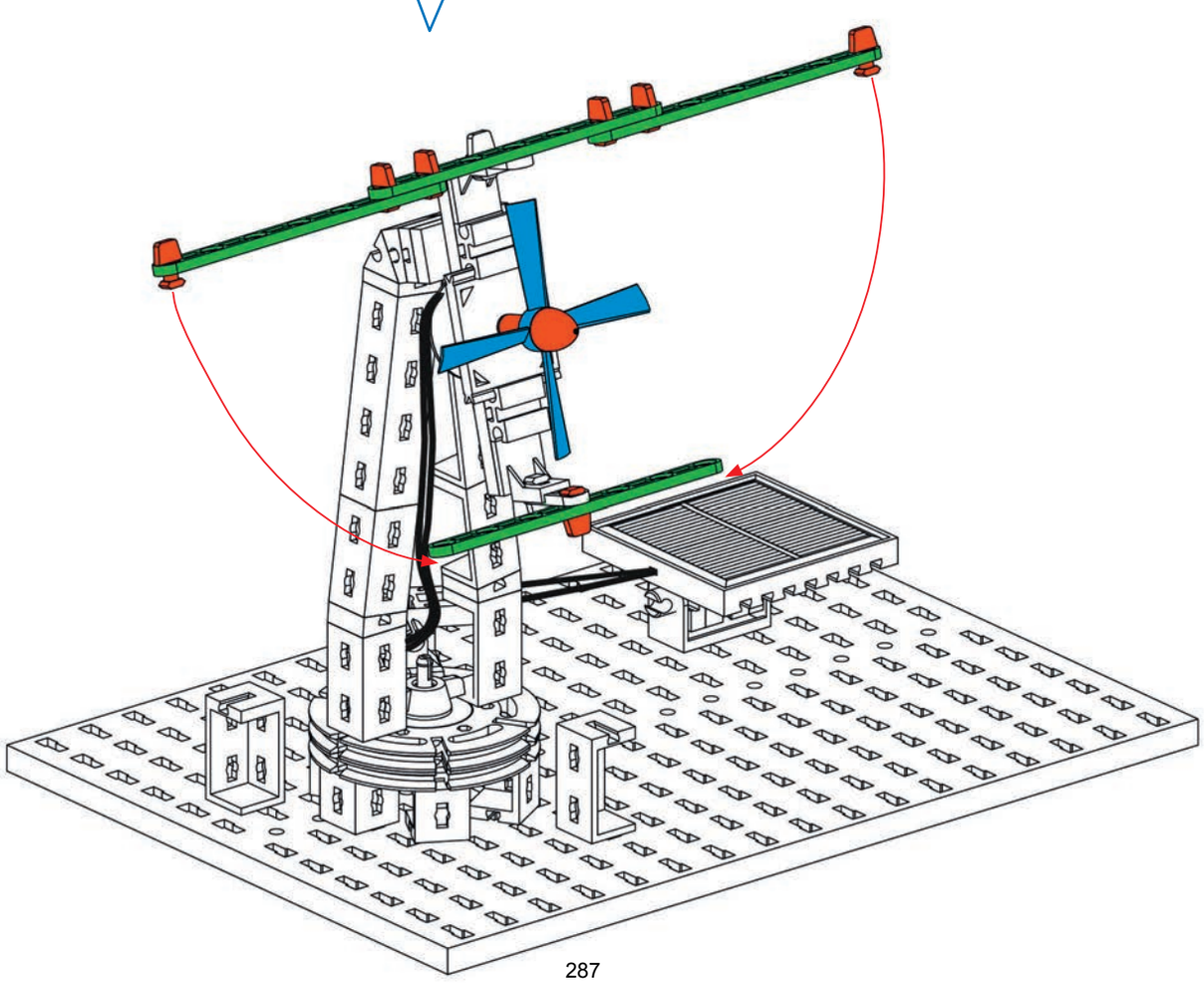

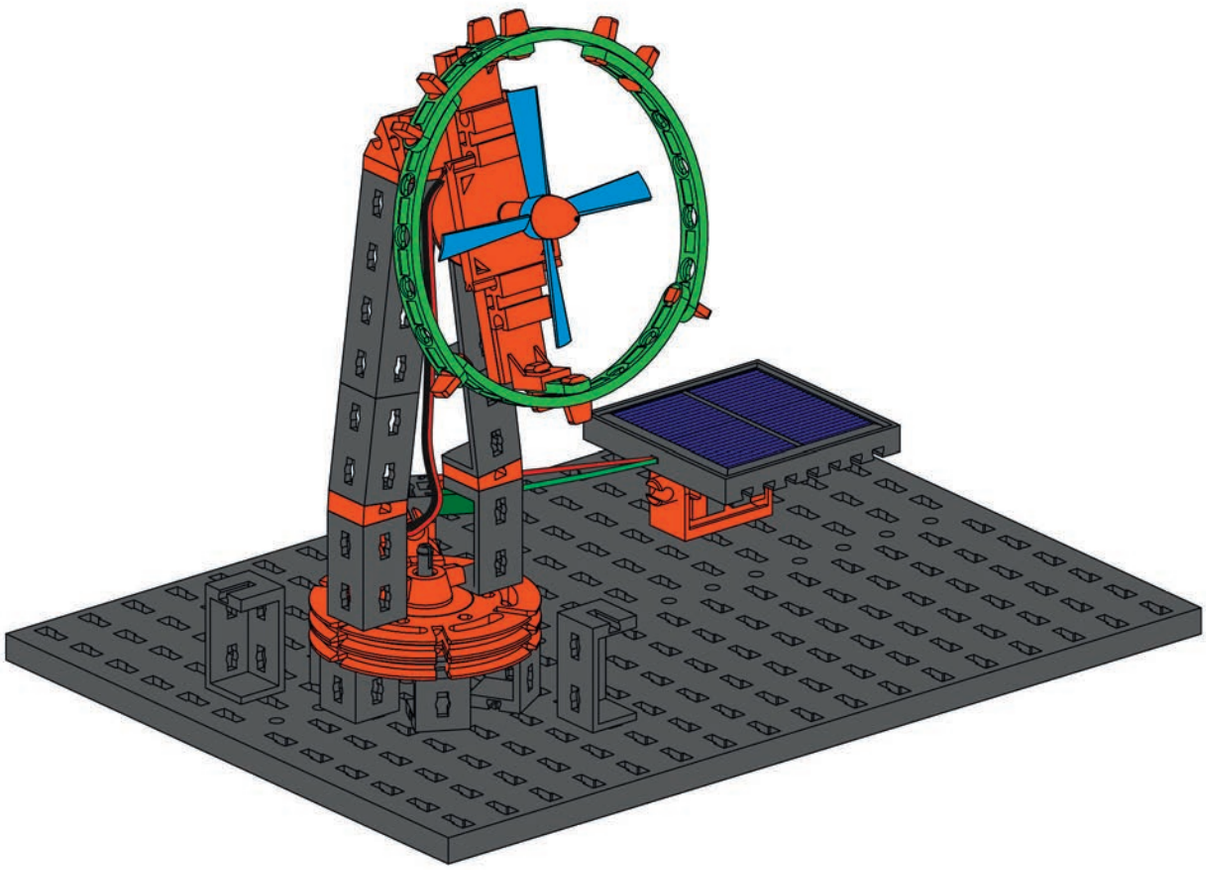

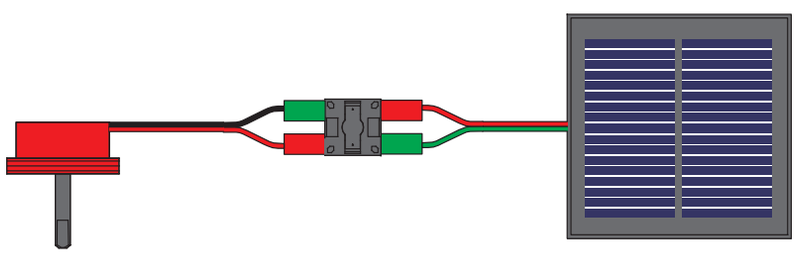

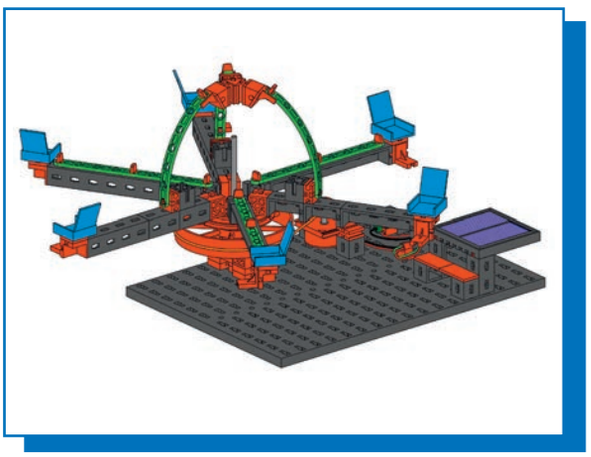

Karussell
Merry-go-round
Manège
Draaimolen
Tiovivo
Carrossel
Giostra
Карусель
旋转木马

1

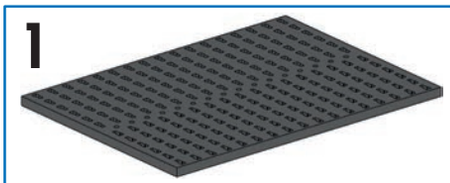

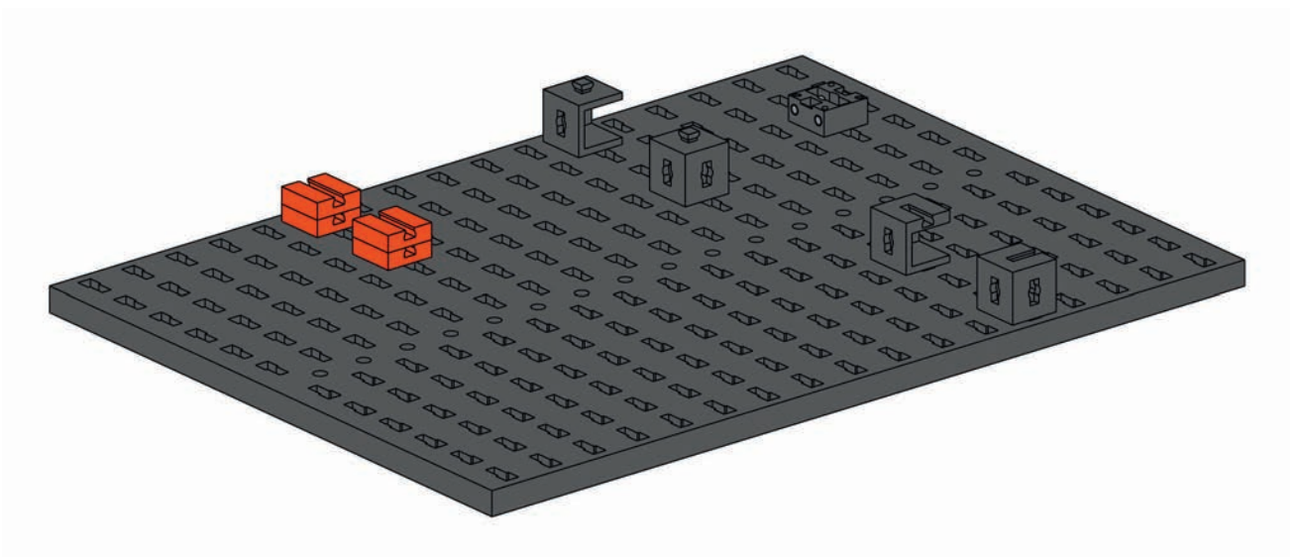

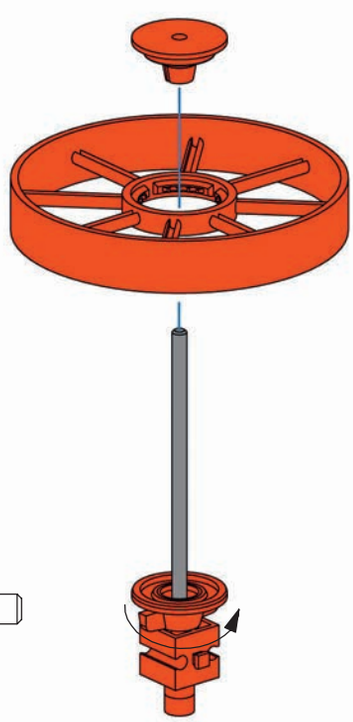

2

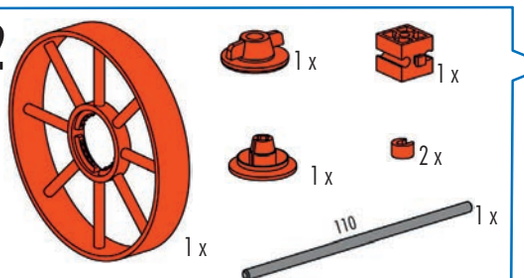

110 mm

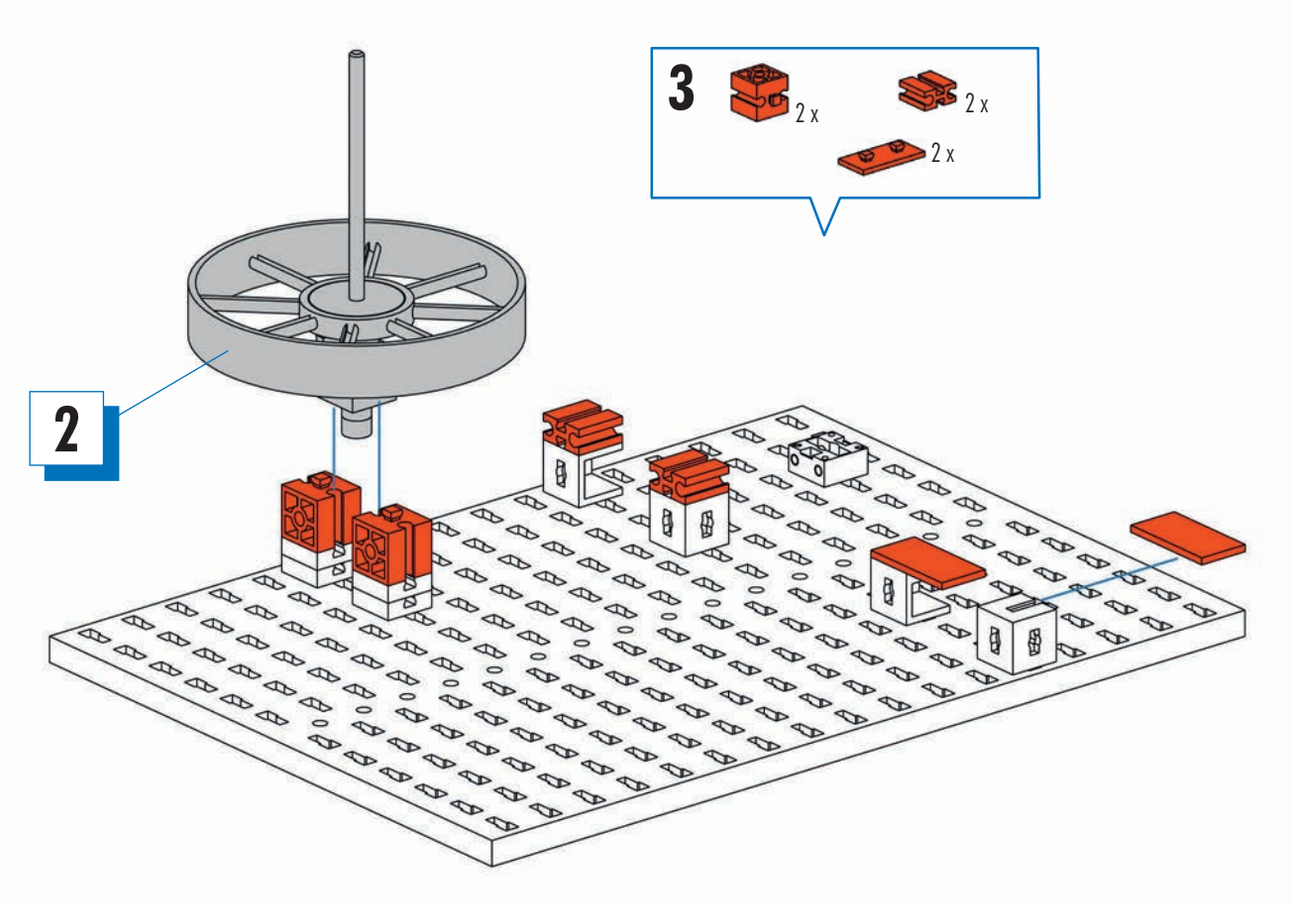
3
2 x
2 x
2 x
2

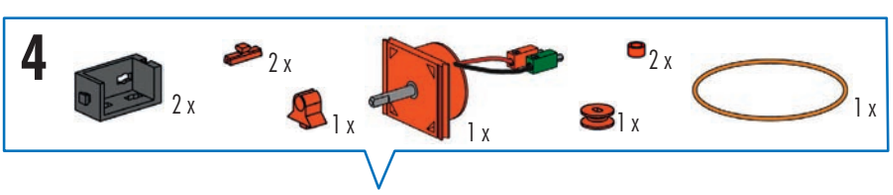
4
2 x
2 x
1 x
1 x
2 x
1 x
1 x

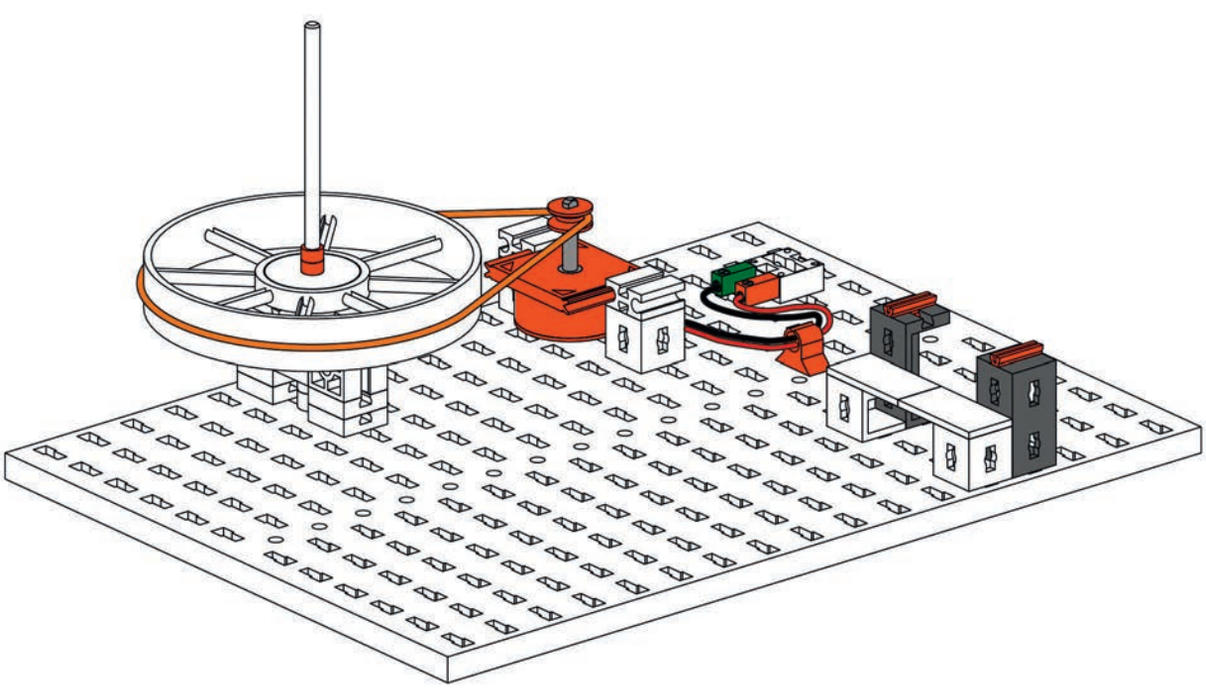

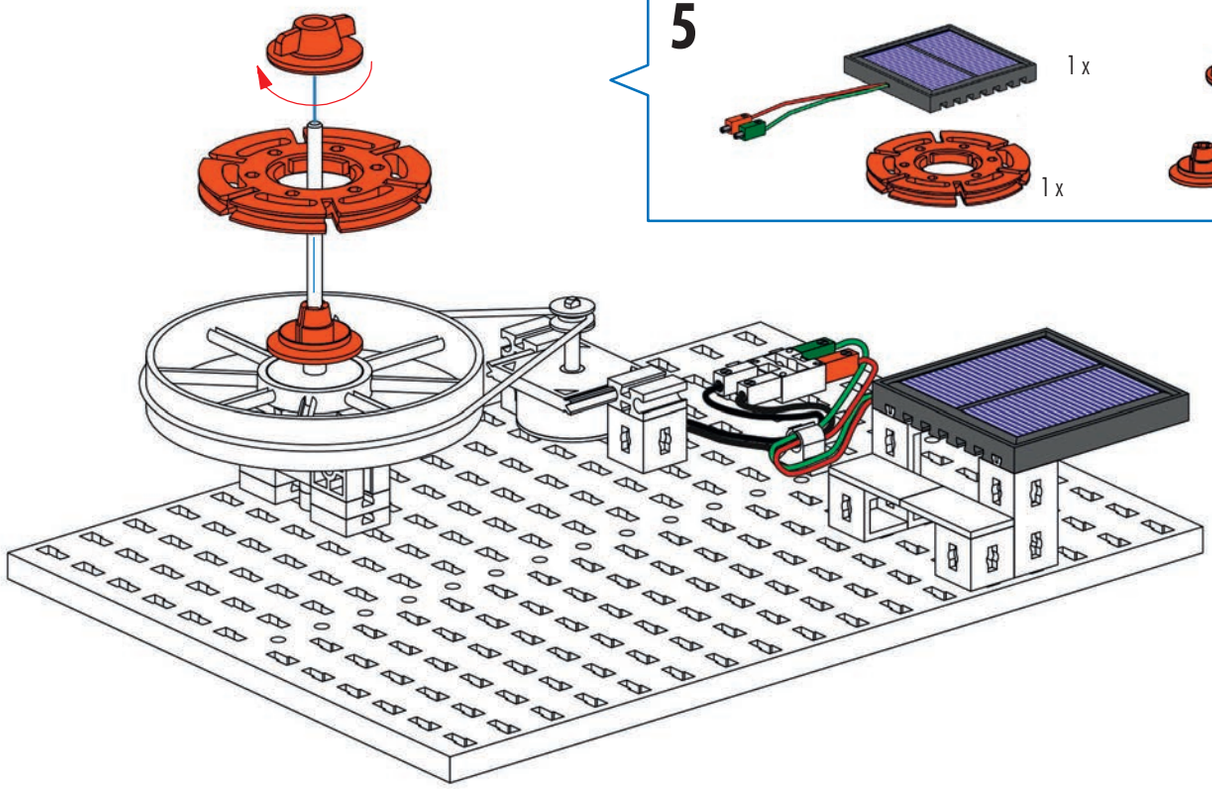
5
1 x
1 x
1 x
1 x

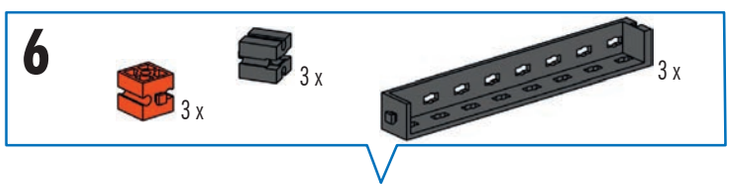
6
3 x
3 x
3 x

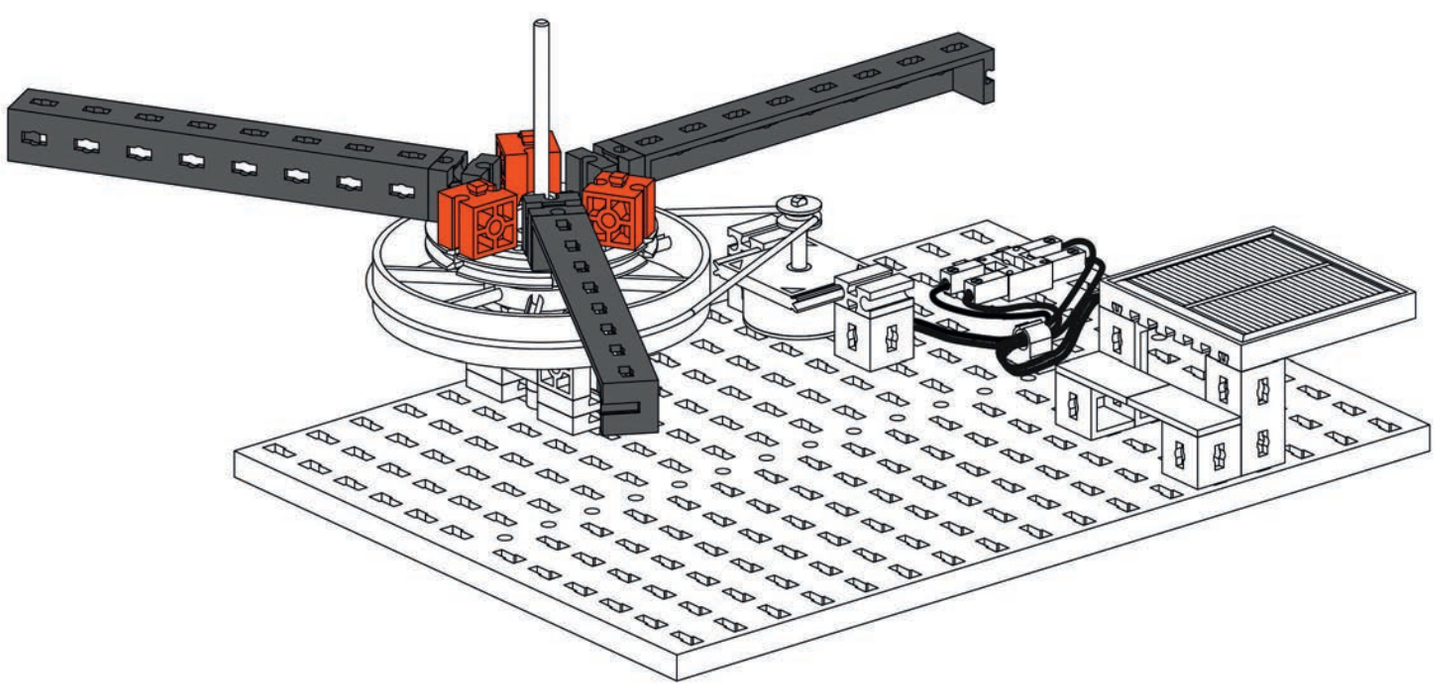

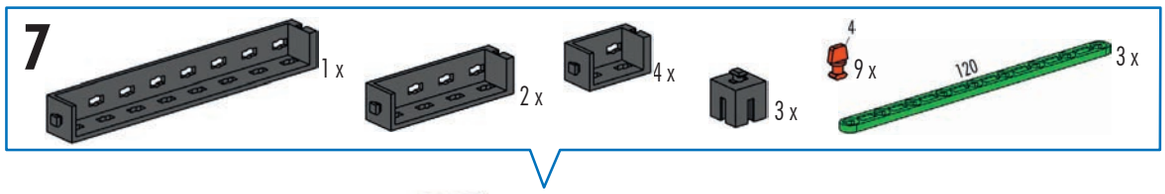
7
1 x
2 x
4 x
3 x
4
9 x
120
3 x

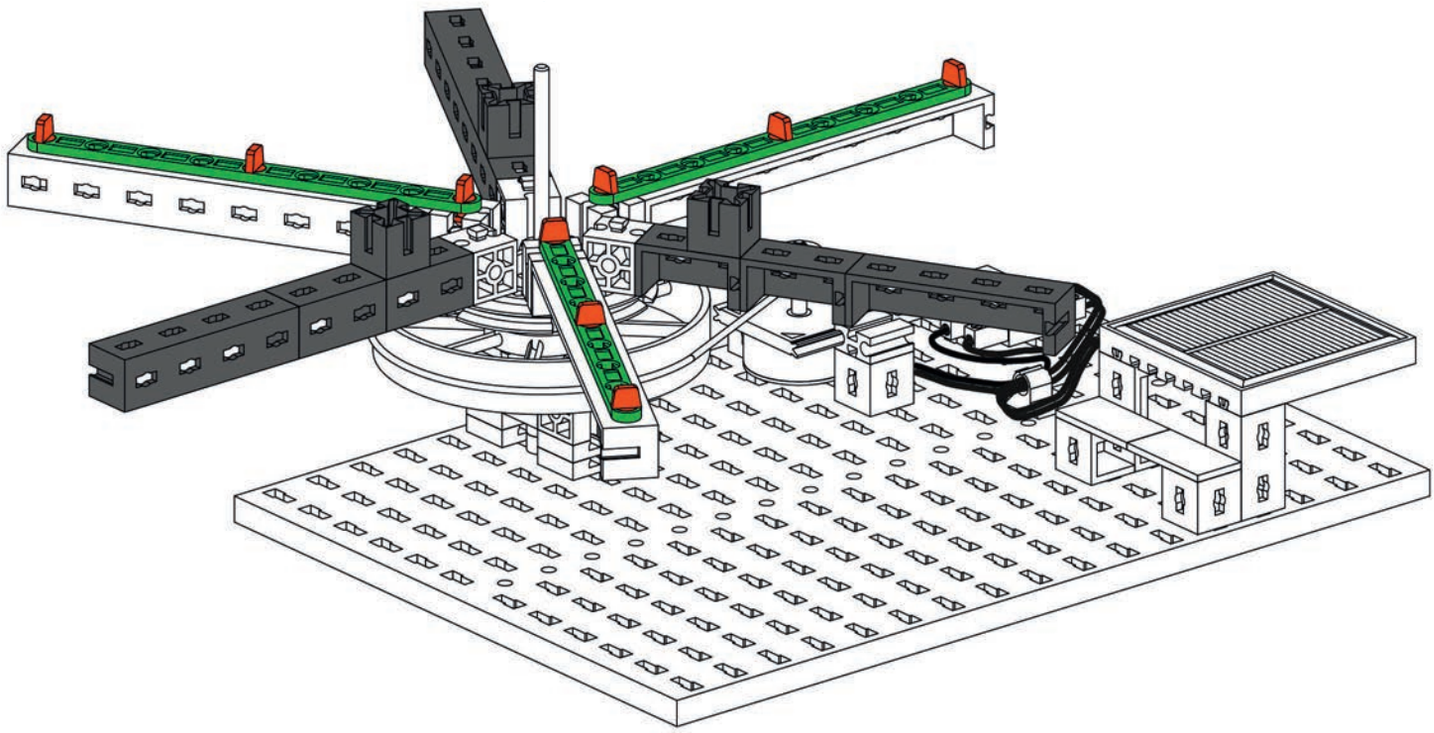

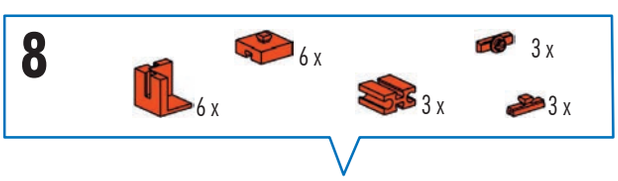
8
6 x
3 x
6 x
3 x
3 x

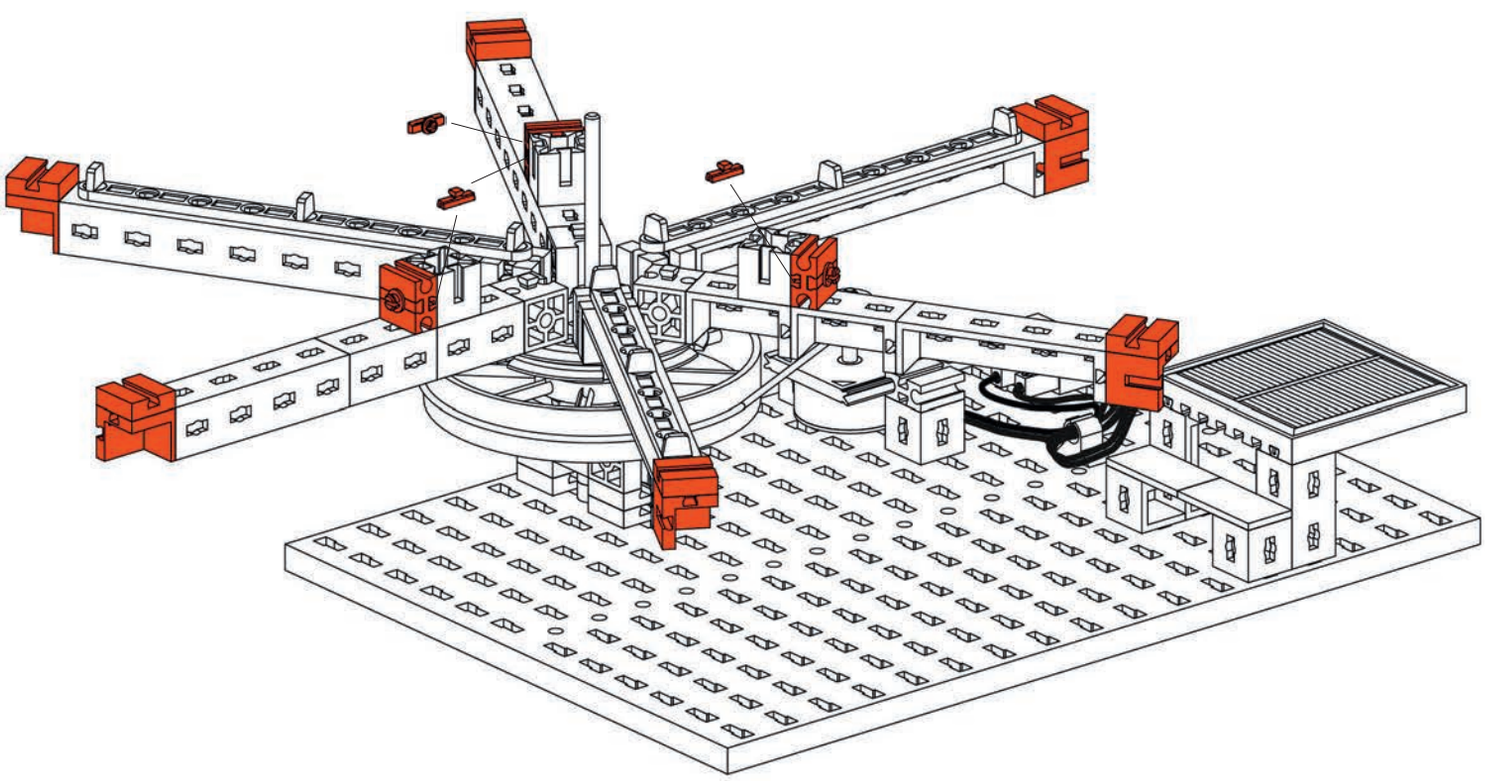

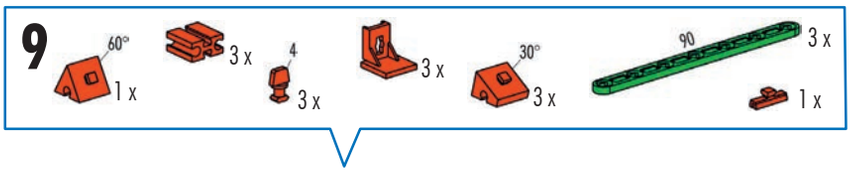
9
60°
1 x
3 x
4
3 x
3 x
30°
3 x
90
3 x
1 x

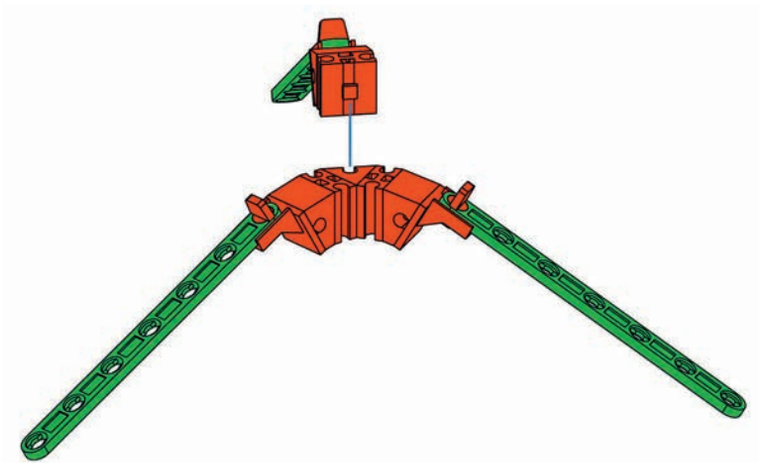

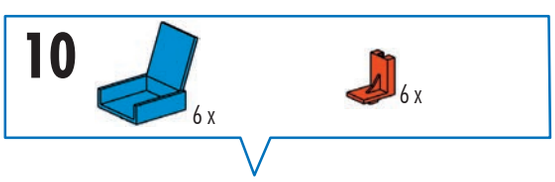
10
6 x
6 x

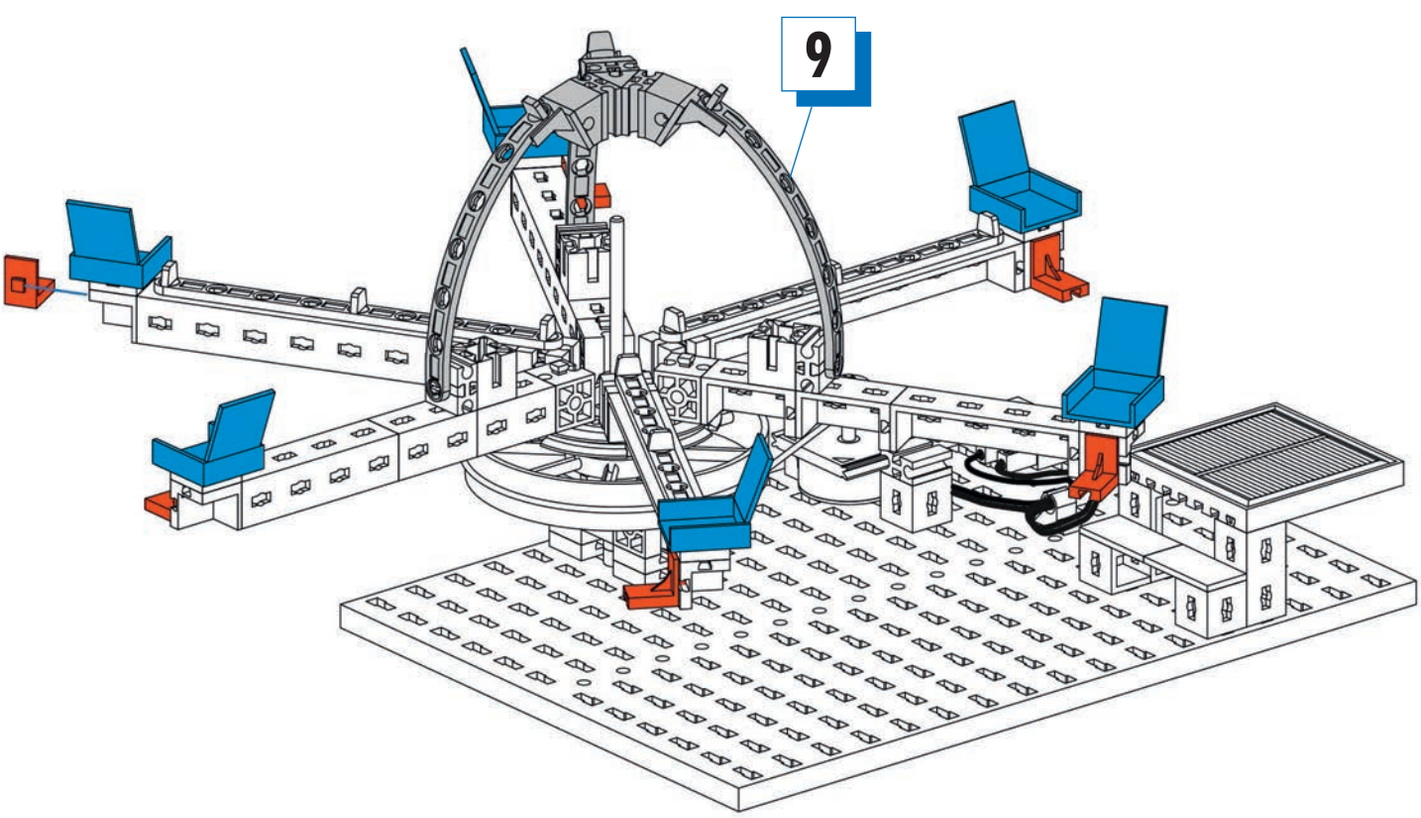
9

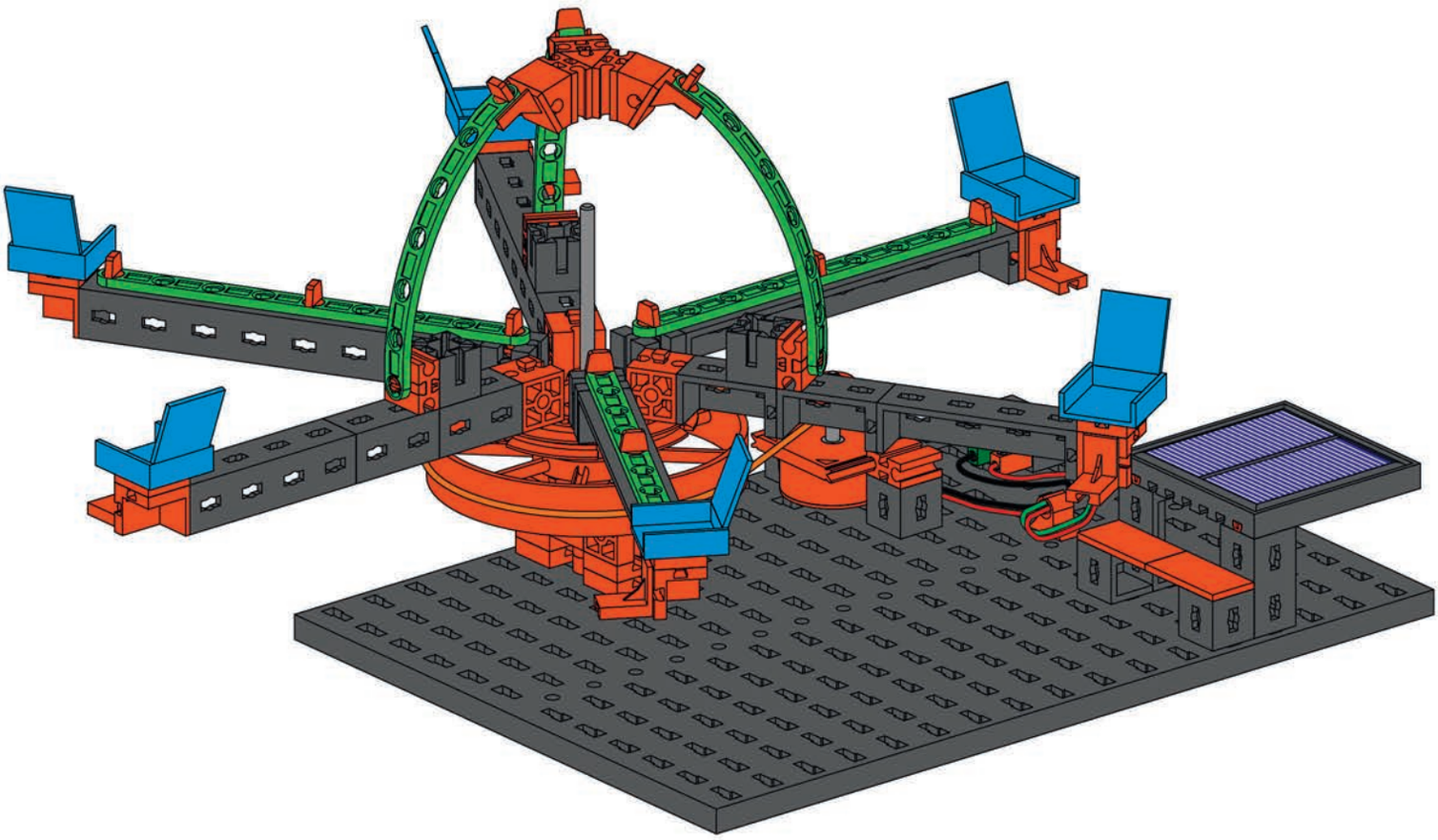

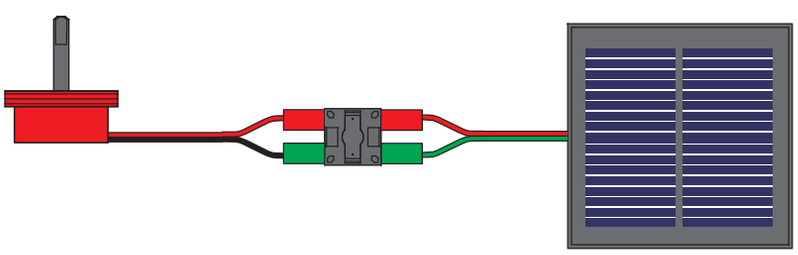

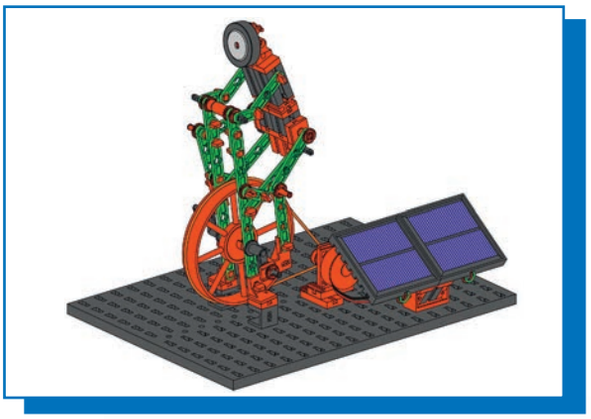

Radfahrer **Fietser** **Ciclista**
Bicycle rider **Ciclista** Велосипедист
Cycliste **Ciclista** 骑自行车的人

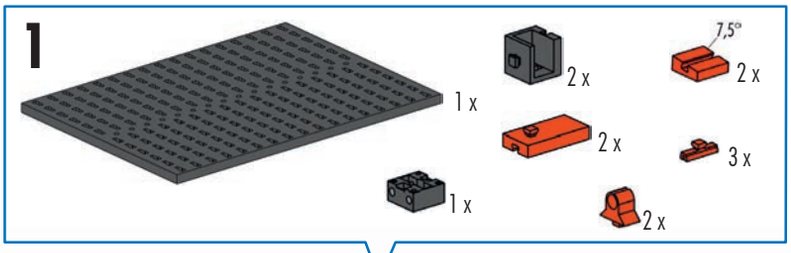

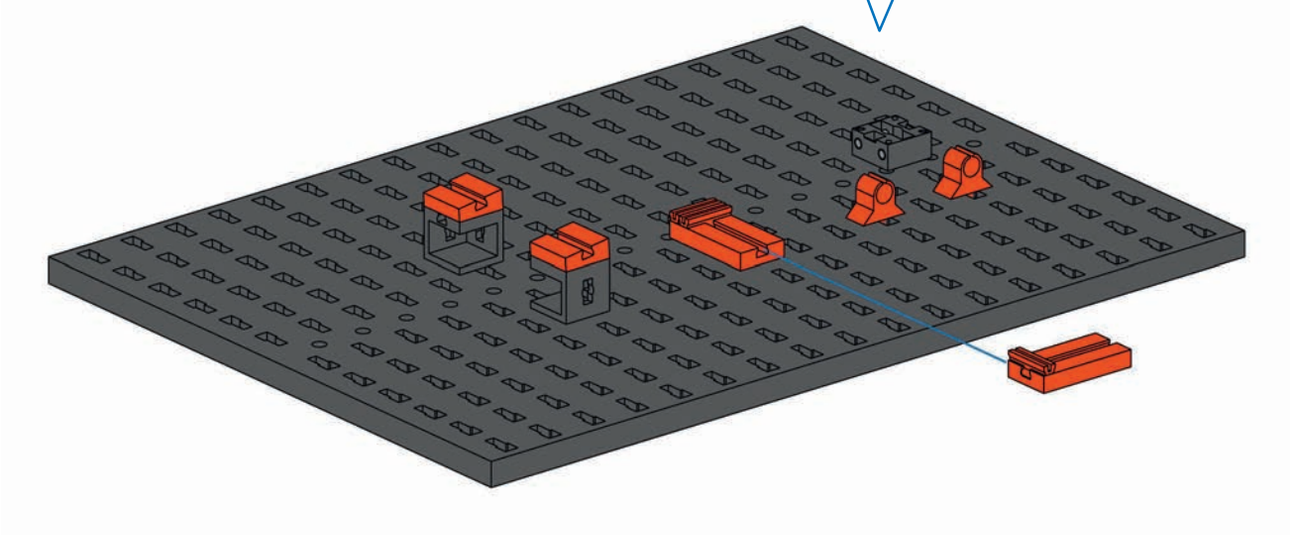

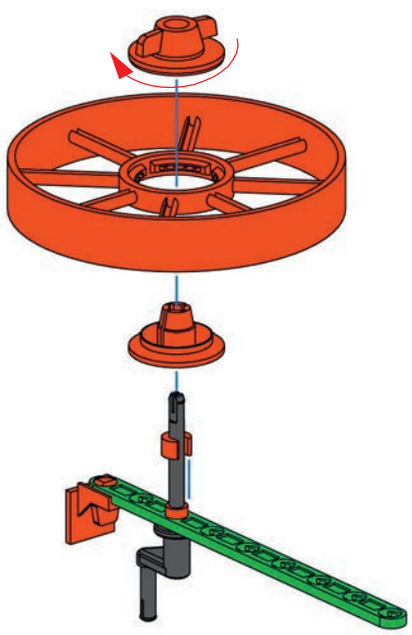

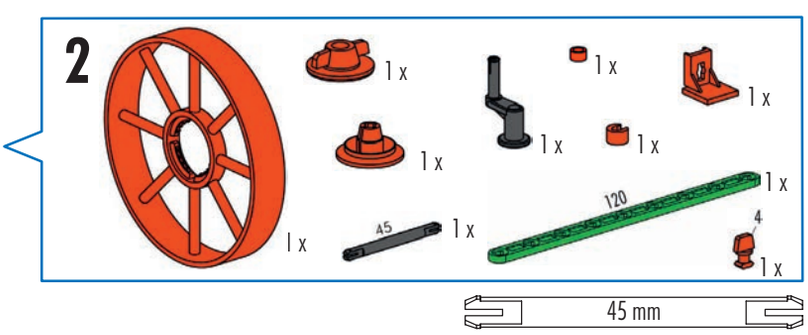

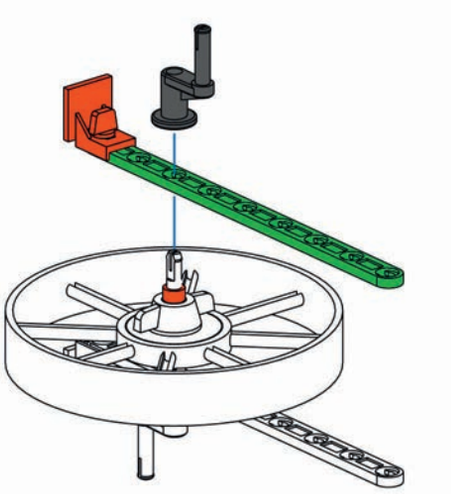

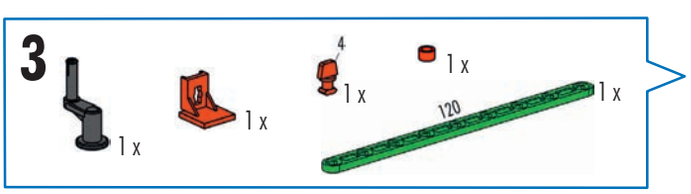

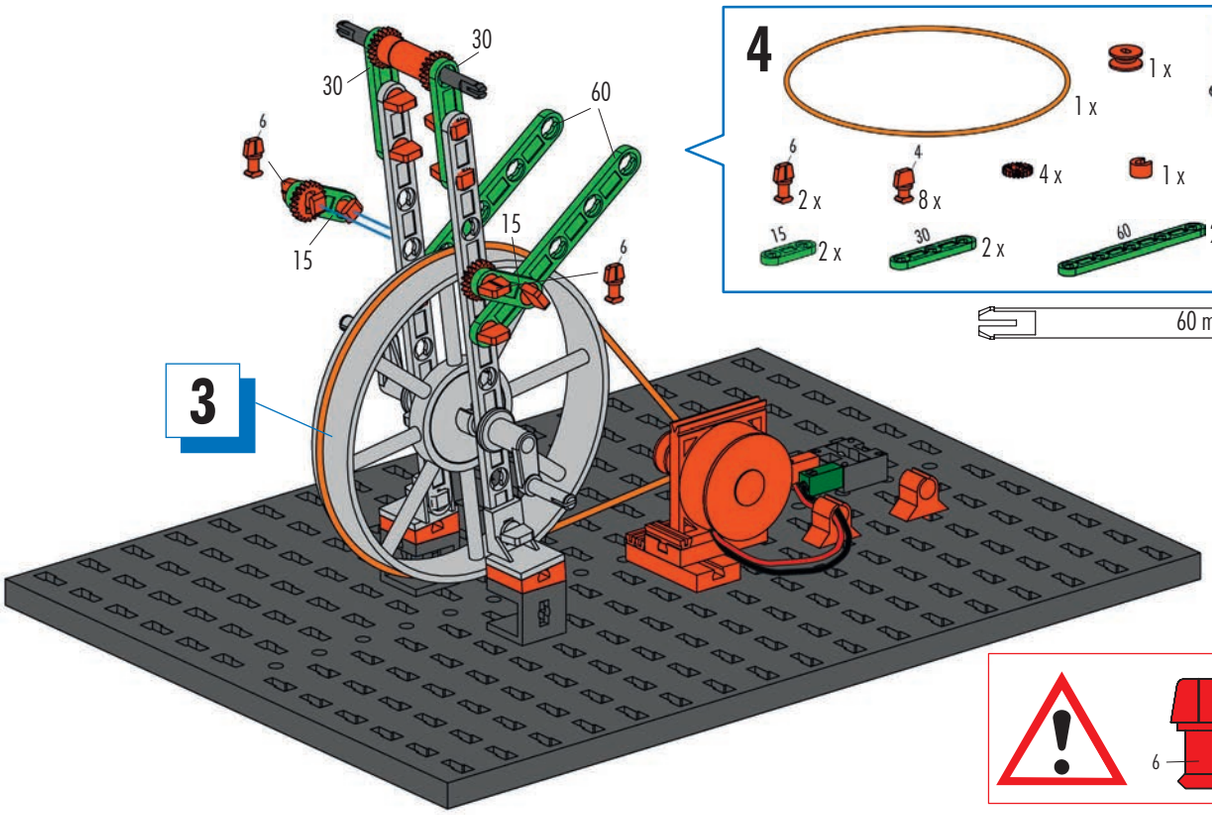
3
30
30
60
6
15
15
6

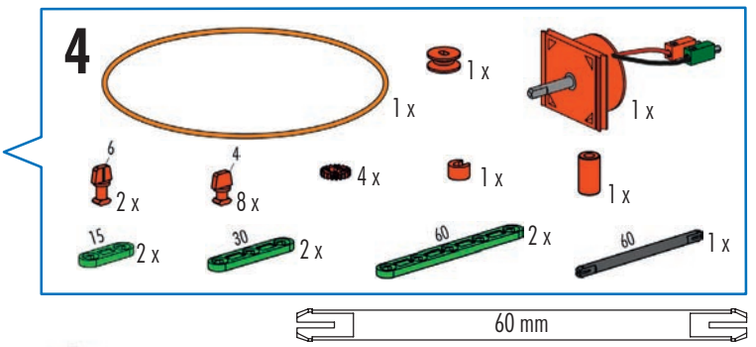
4
1 x
1 x
1 x
6
2 x
4
8 x
4 x
1 x
1 x
15
2 x
30
2 x
60
2 x
60
1 x
60 mm

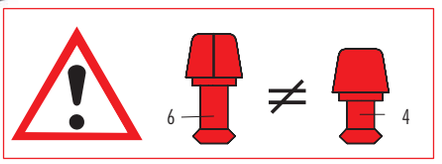
6
≠
4

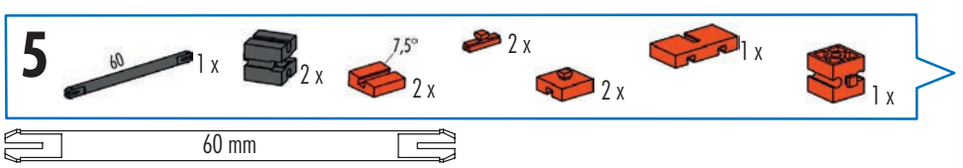
5
60
1 x
2 x
7,5°
2 x
2 x
2 x
1 x
1 x
60 mm

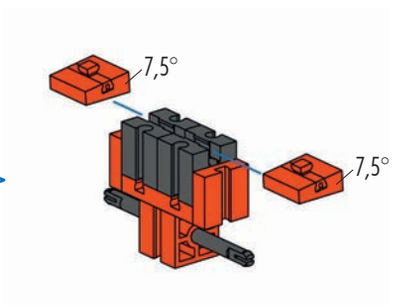
7,5°
7,5°

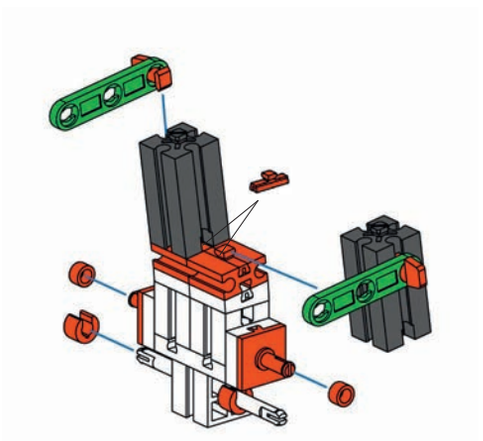

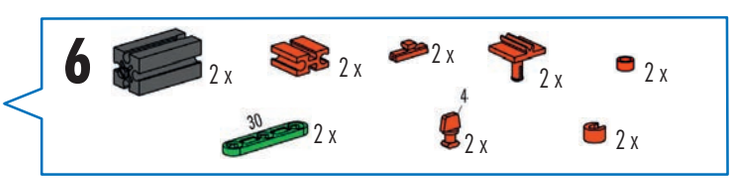
6
2 x
2 x
2 x
2 x
2 x
30
2 x
4
2 x
2 x

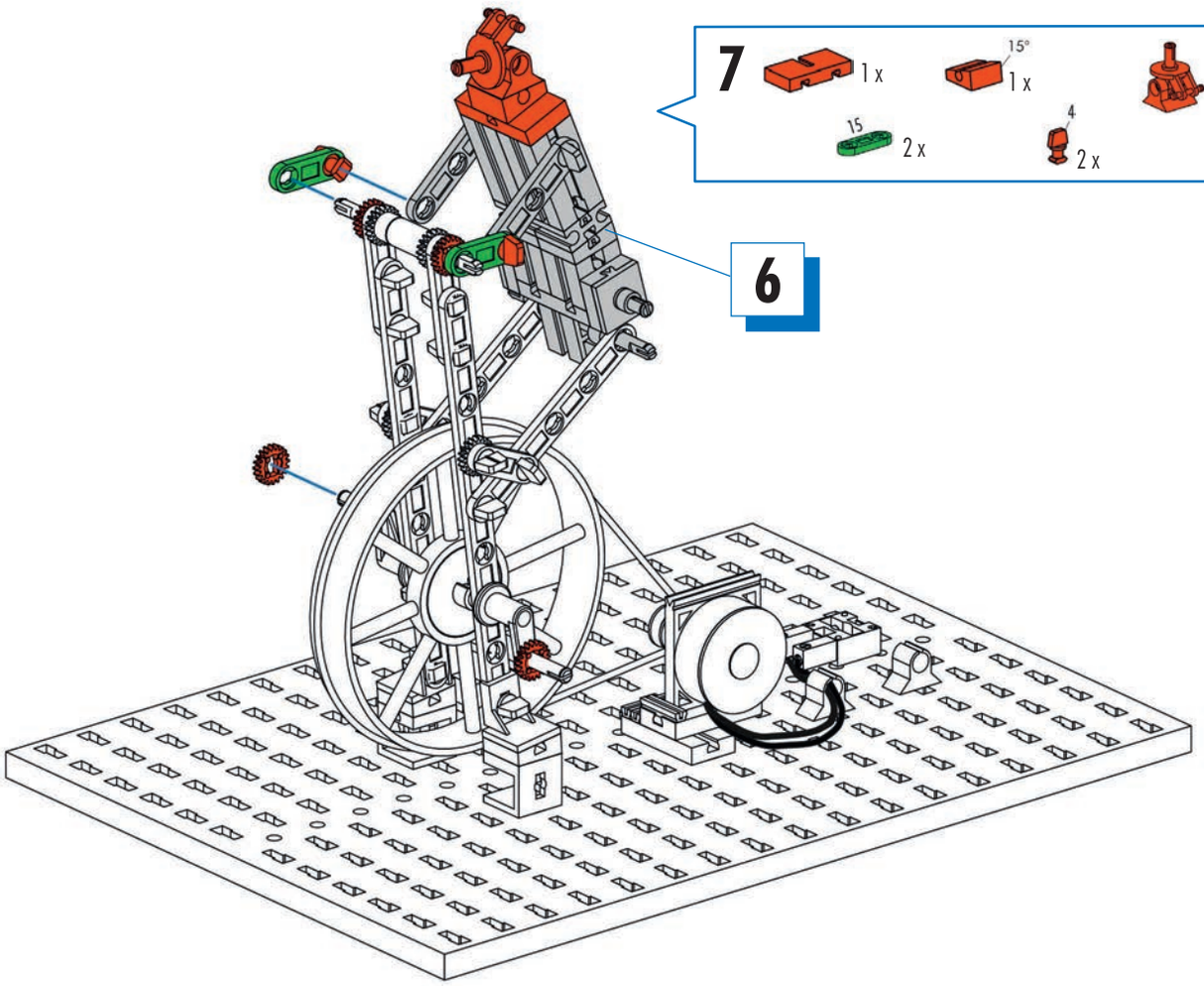
6

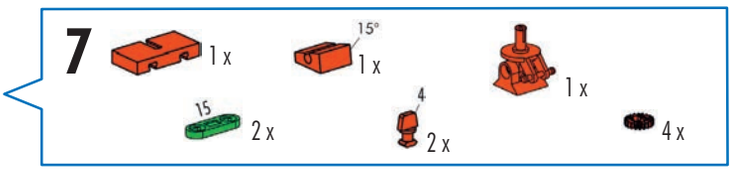
7
1 x
15°
1 x
1 x
15
2 x
4
2 x
4 x

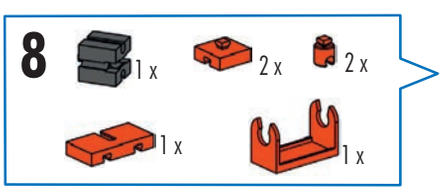
8
1 x
2 x
2 x
1 x
1 x

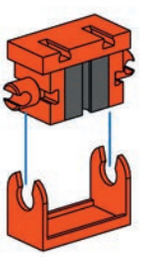

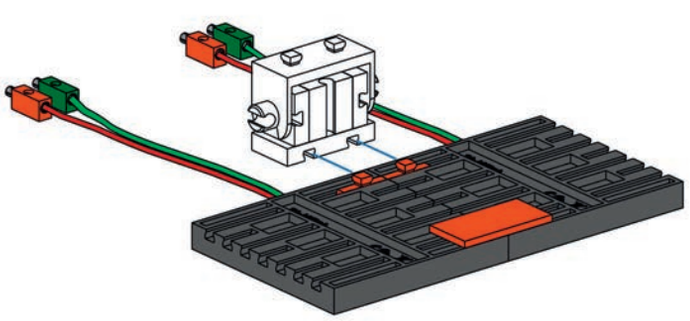

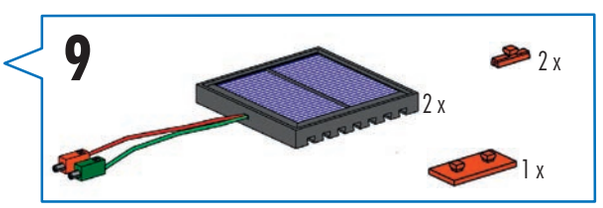
9
2 x
2 x
1 x

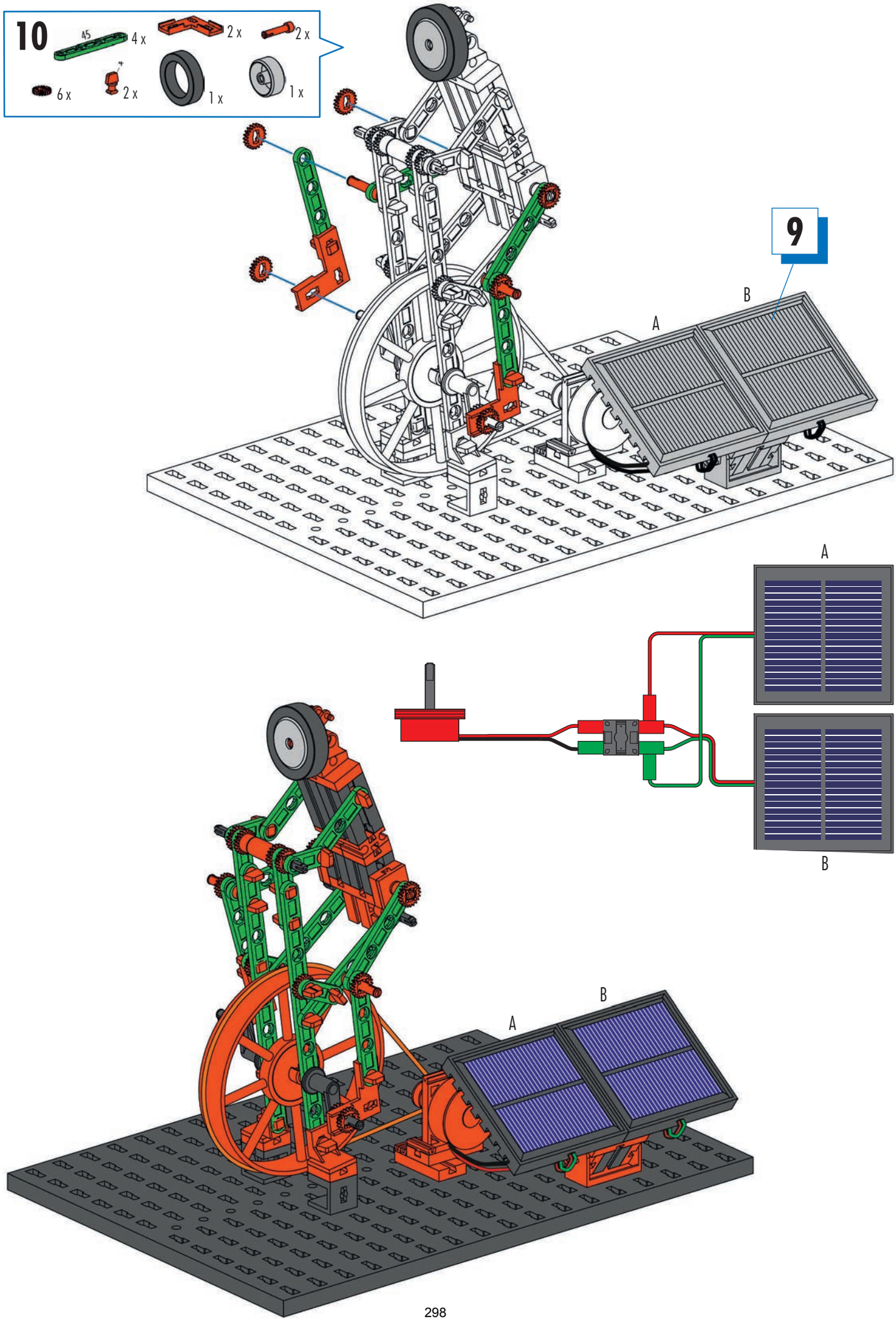
10
45
4 x
2 x
2 x
6 x
2 x
1 x
1 x
9
A
B
A
B
A
B

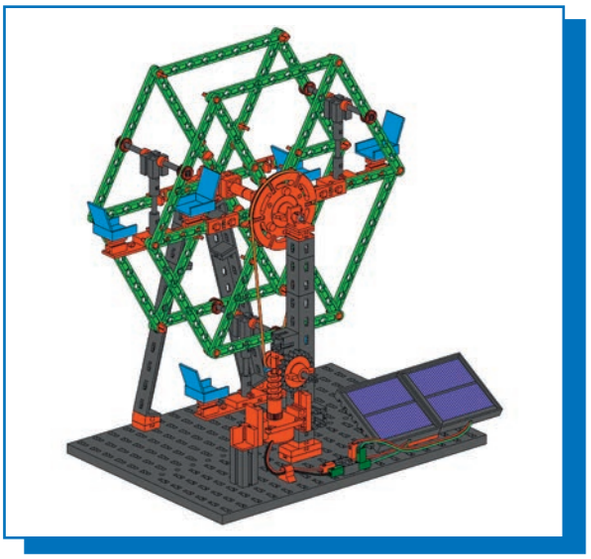

Riesenrad
Ferris wheel
Grande roue

Reuzenrad
Rueda gigante
Roda gigante

Ruota gigante
Колесо обозрения
大转轮

1

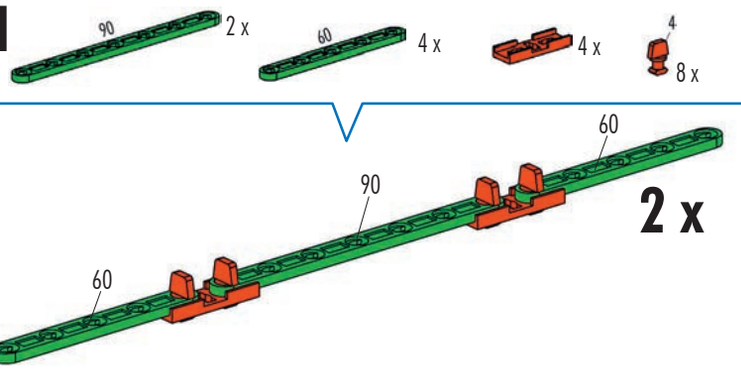

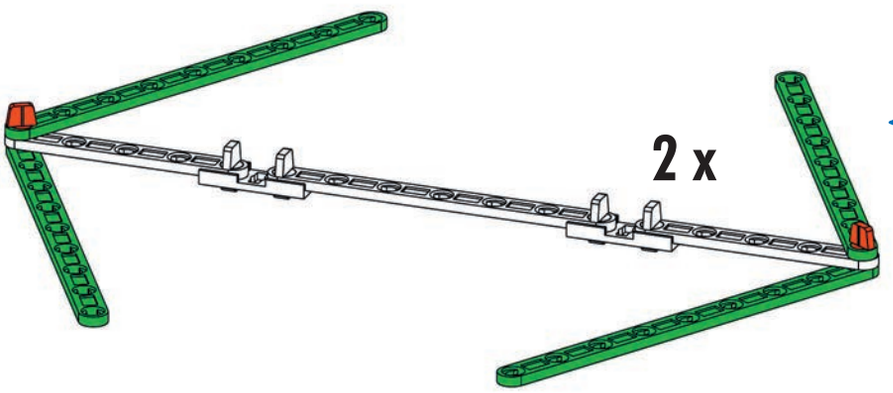

2

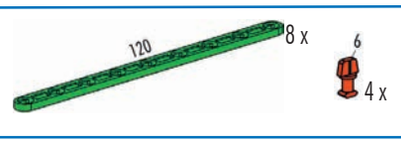

3

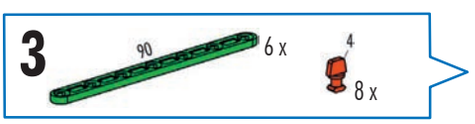

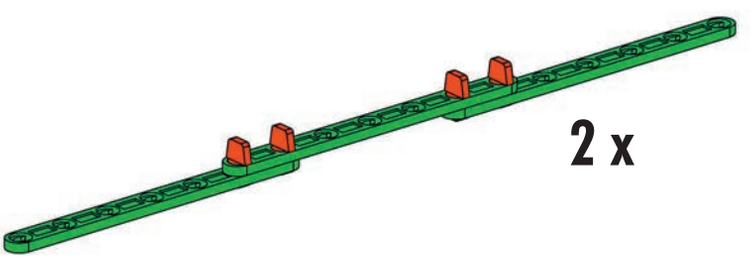

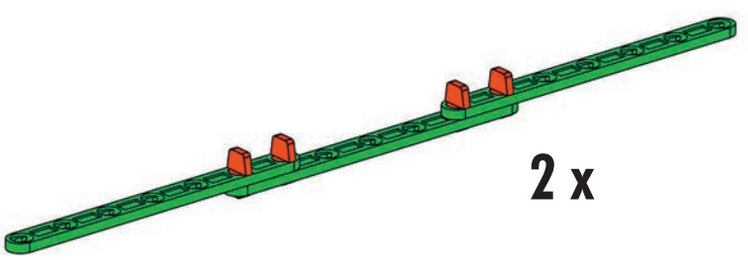

4

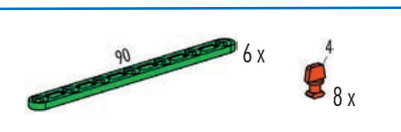

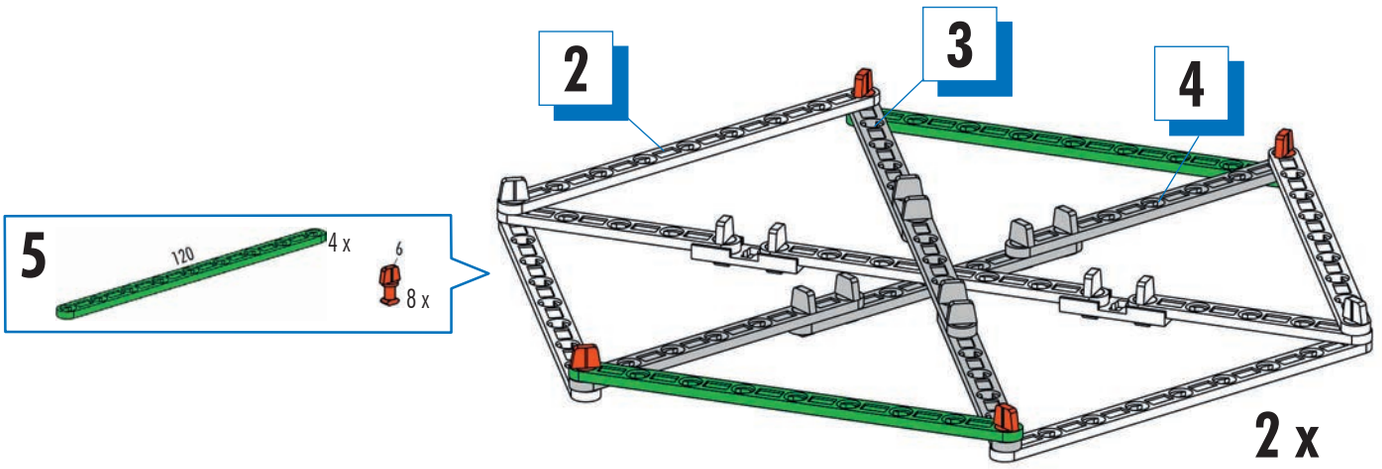
2
3
4
5
120
4 x
6
8 x
2 x

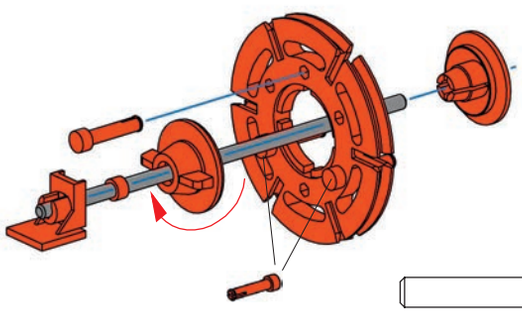

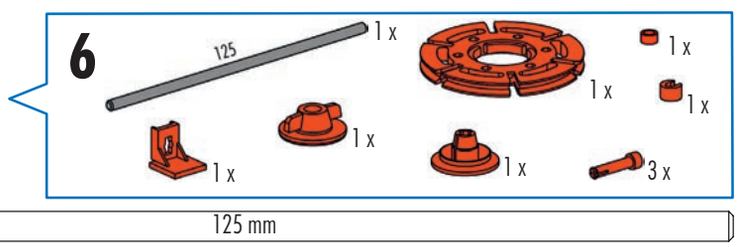
6
125
1 x
1 x
1 x
1 x
1 x
1 x
1 x
3 x
125 mm

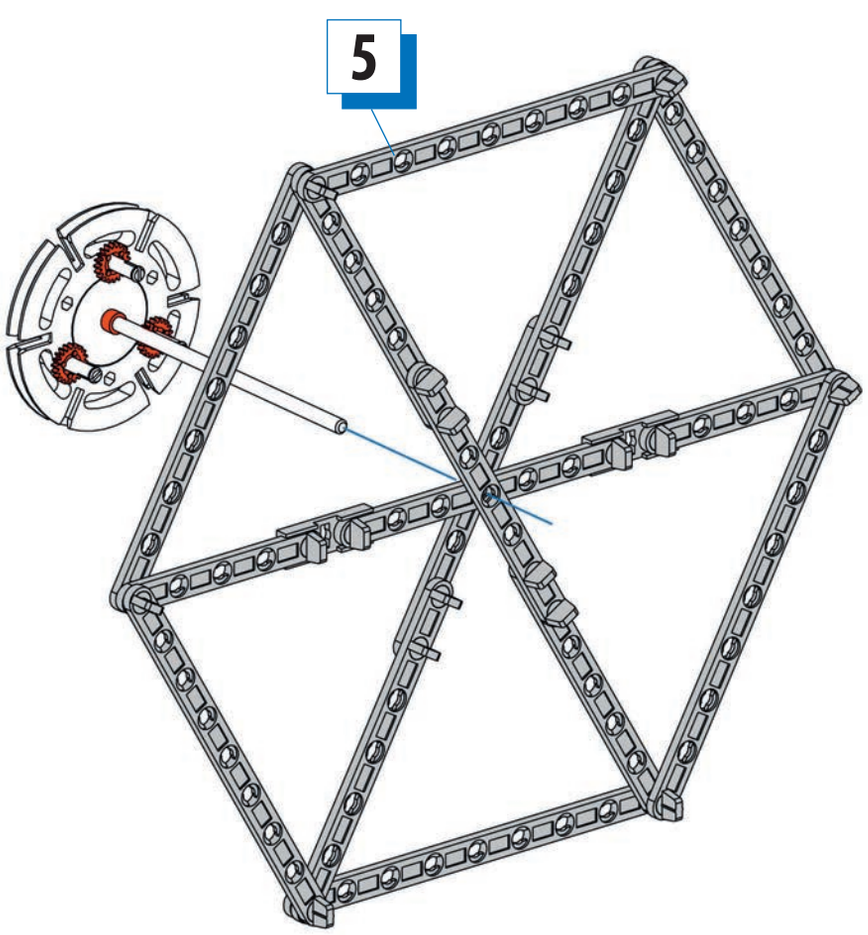
5

7
3 x
1 x

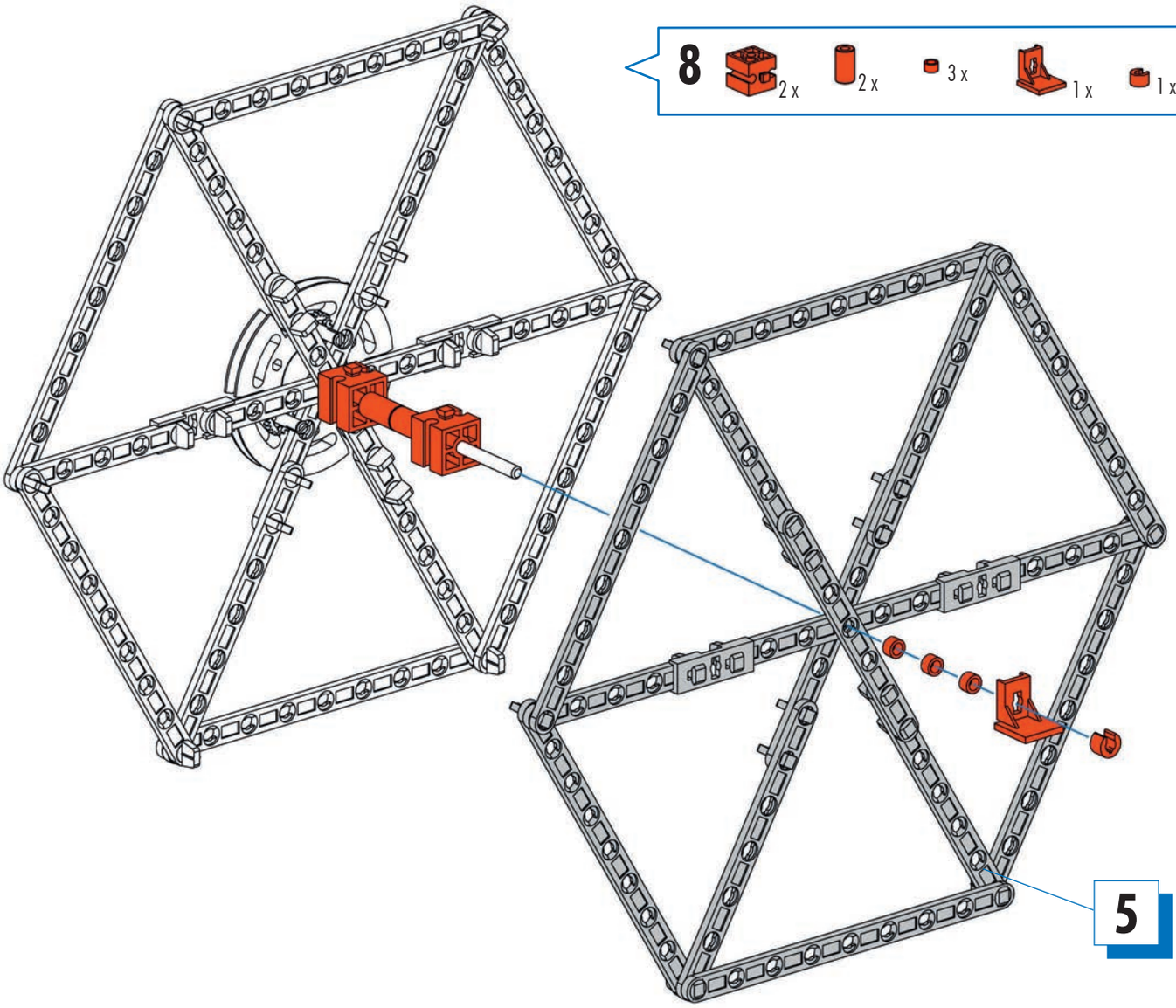
8
2 x
2 x
3 x
1 x
1 x
5

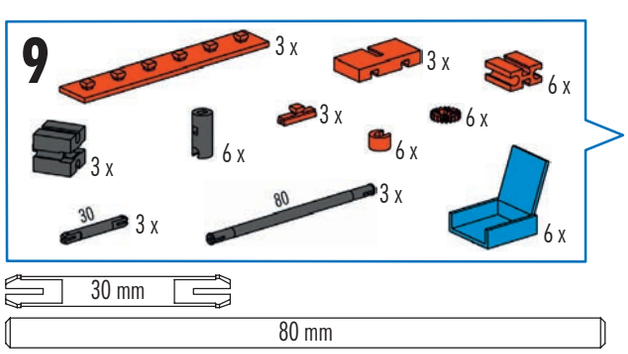
9
3 x
3 x
6 x
3 x
6 x
6 x
6 x
3 x
30
3 x
80
3 x
6 x
30 mm
80 mm

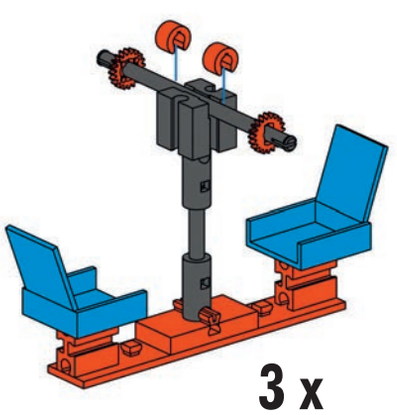
3 x

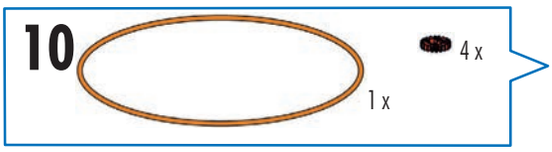
10
4 x
1 x

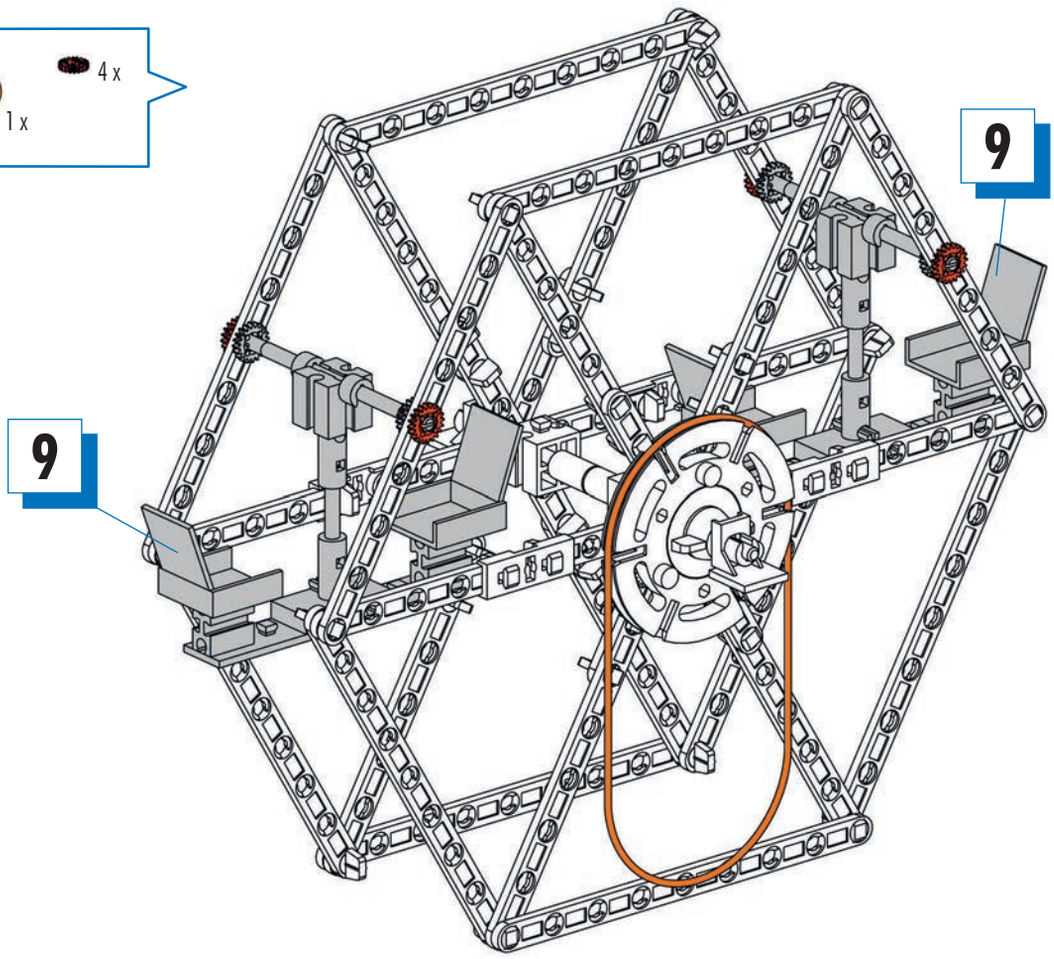
9
9

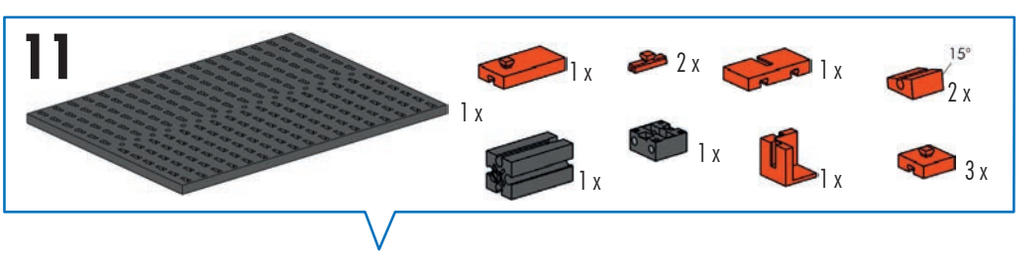
11
1 x
1 x
2 x
1 x
15°
2 x
1 x
1 x
1 x
3 x

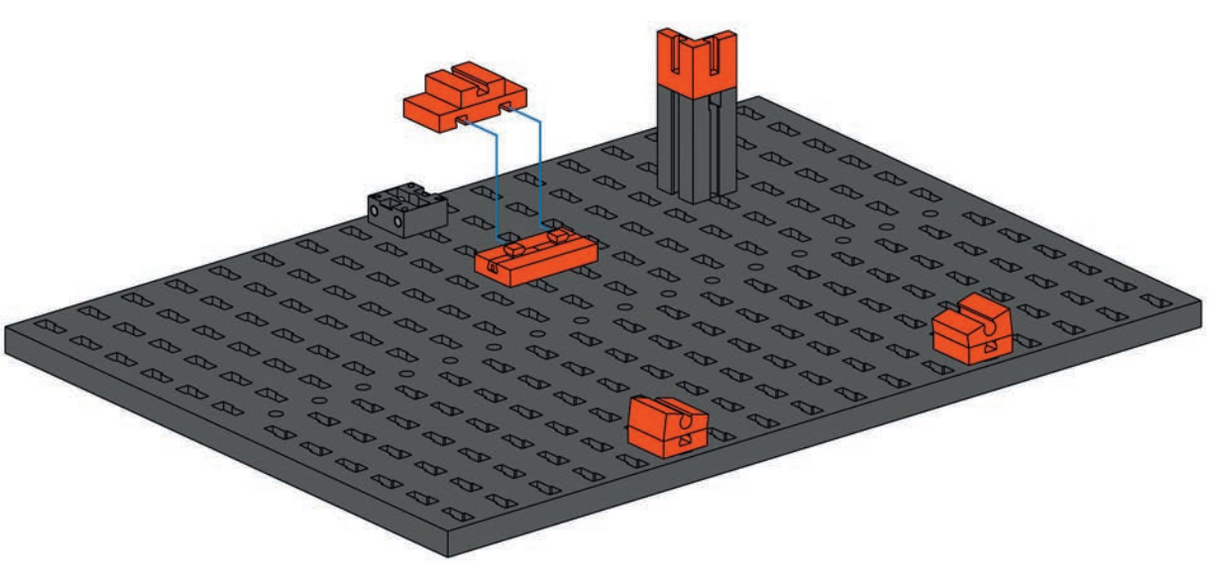

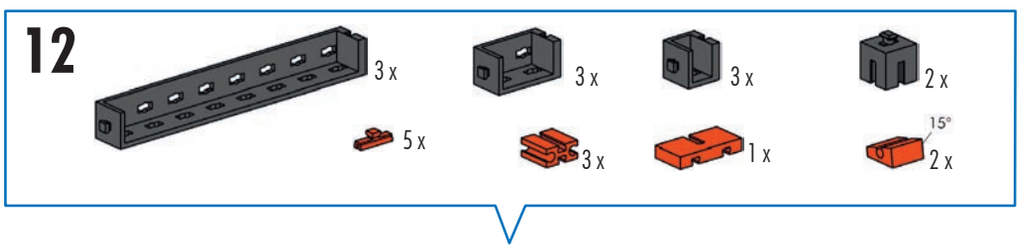
12
3 x
3 x
3 x
2 x
5 x
3 x
1 x
15°
2 x

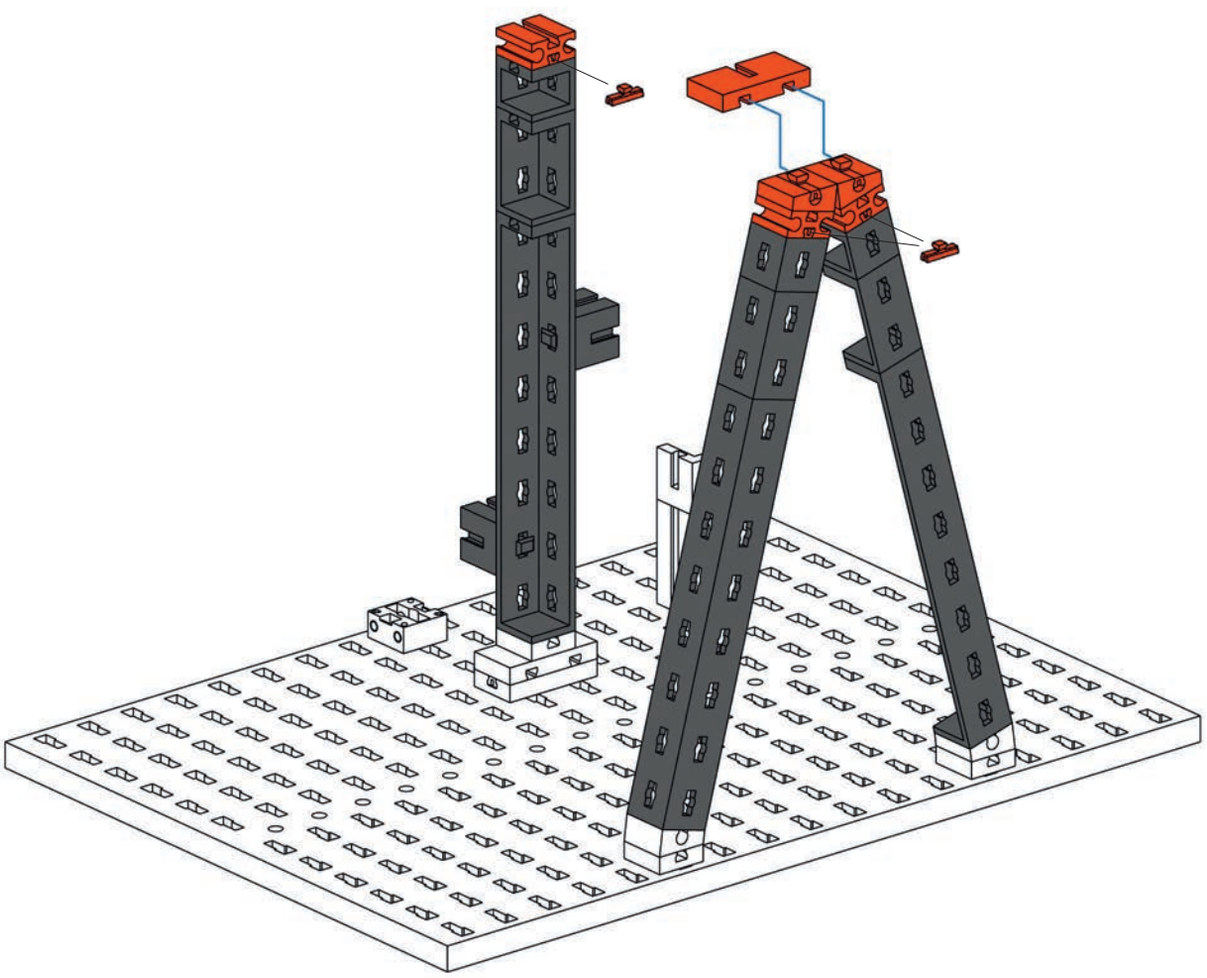

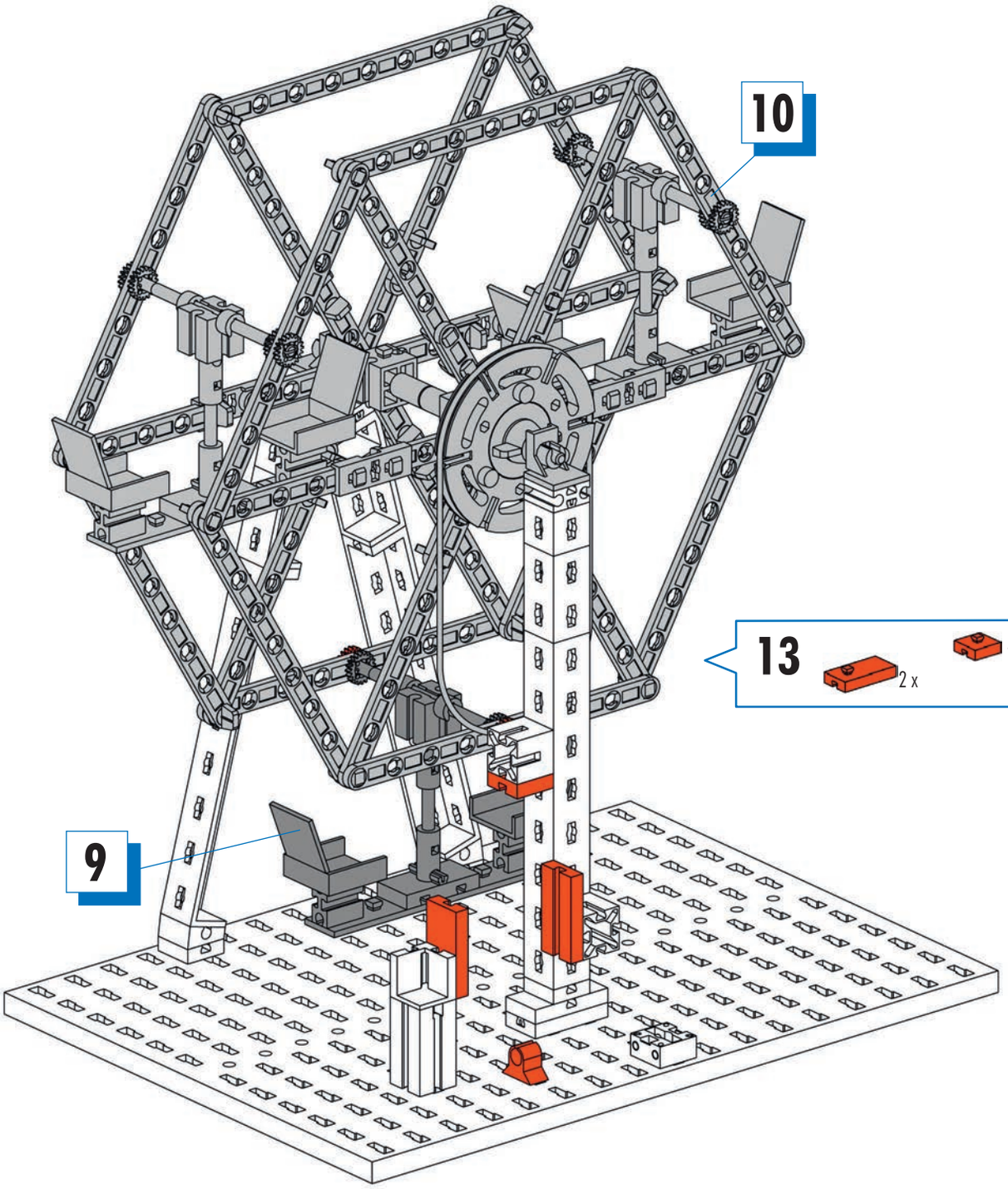
10
9

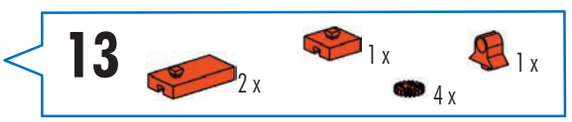
13
2 x
1 x
1 x
4 x

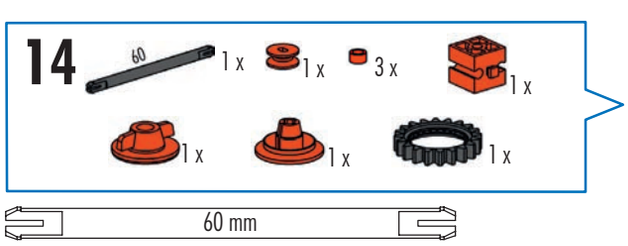
14
60
1 x
1 x
3 x
1 x
1 x
1 x
1 x
60 mm

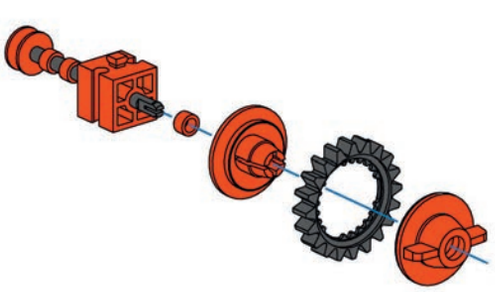

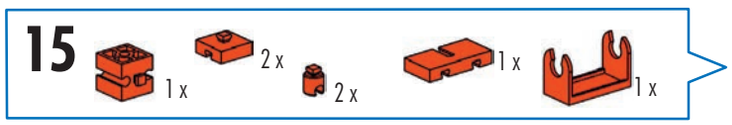
15
1 x
2 x
2 x
1 x
1 x

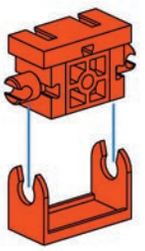

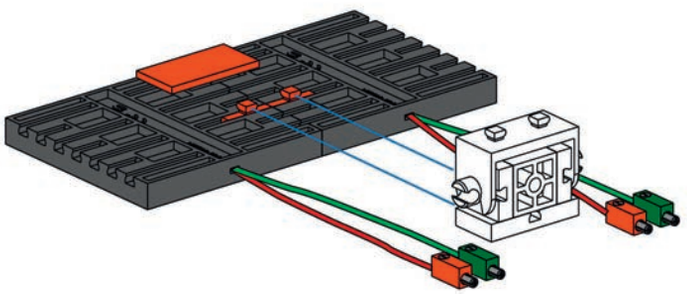

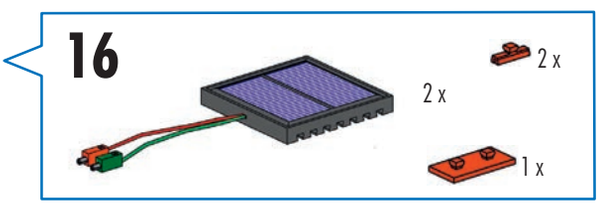
16
2 x
2 x
1 x

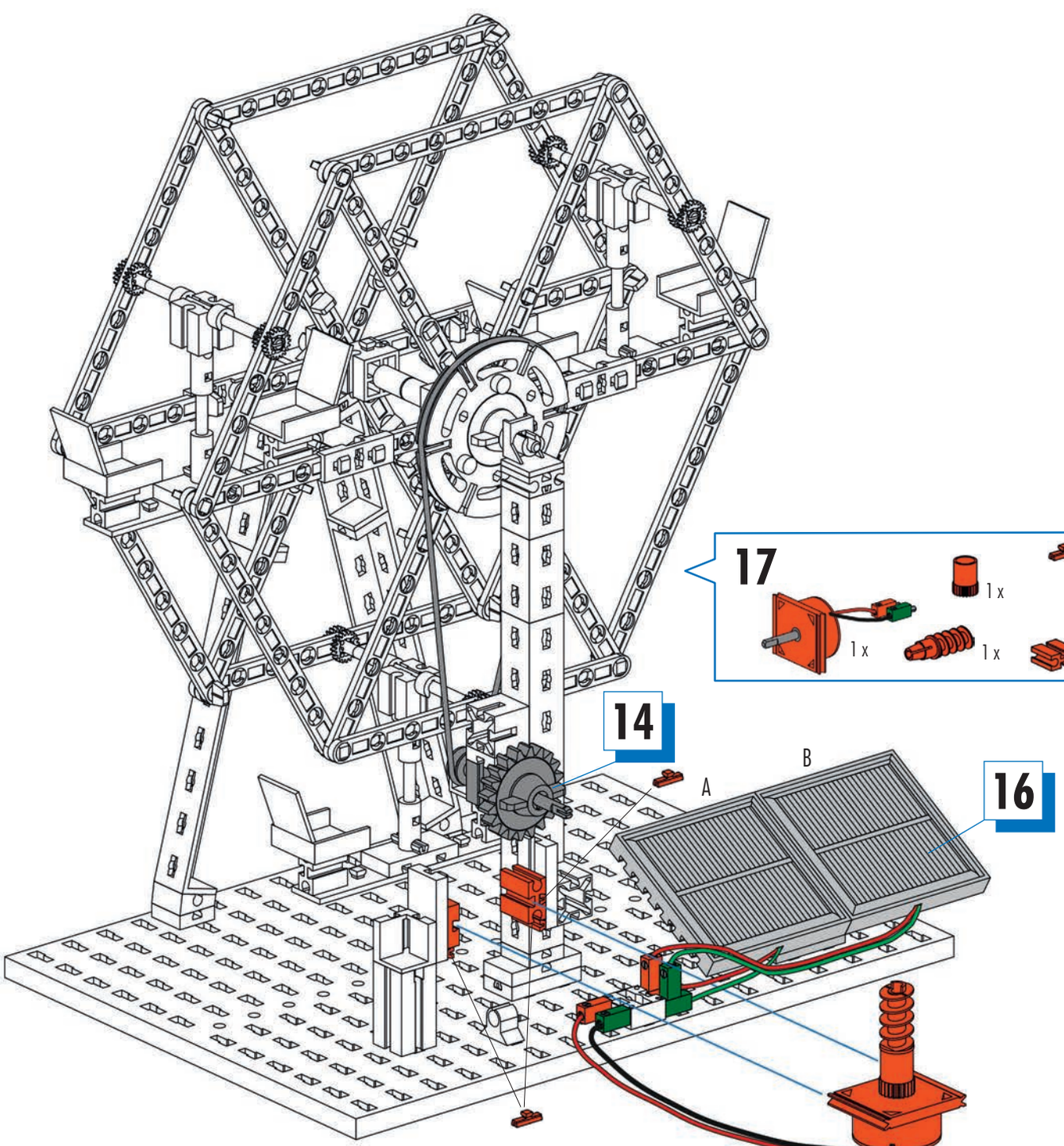
14
A
B
16

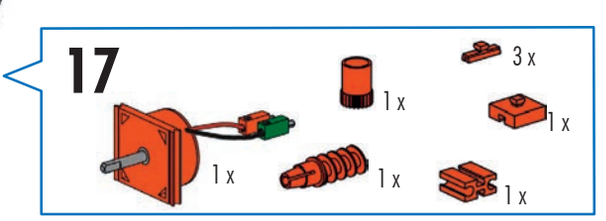
17
3 x
1 x
1 x
1 x
1 x
1 x

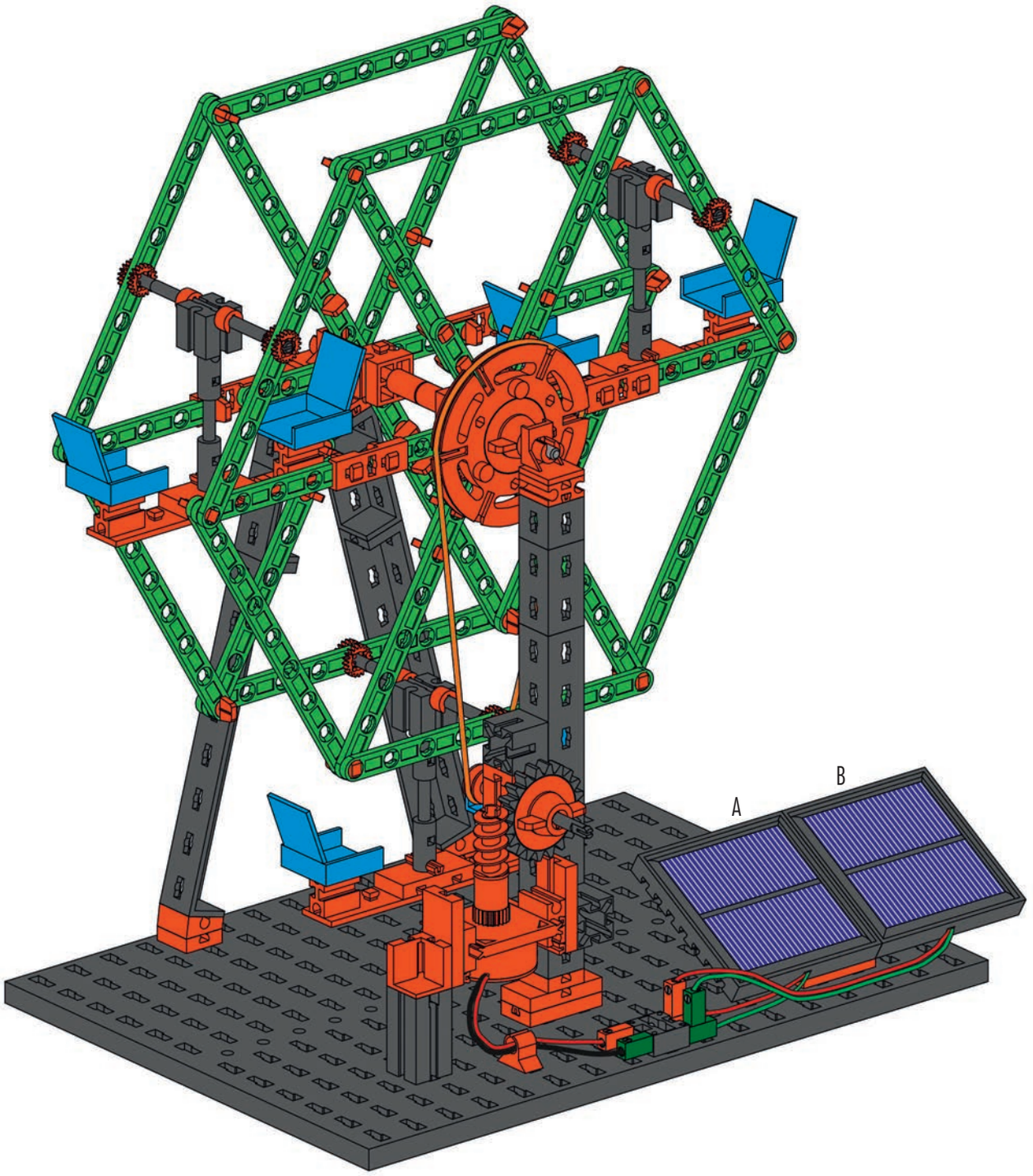

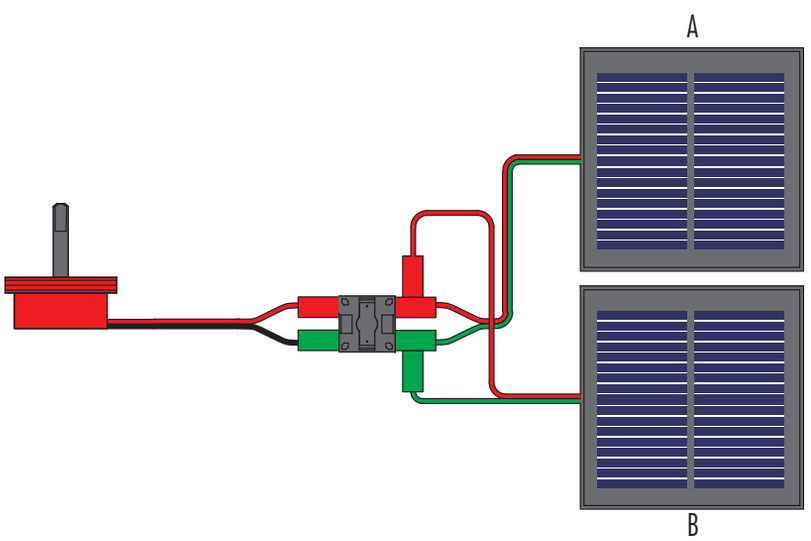

306

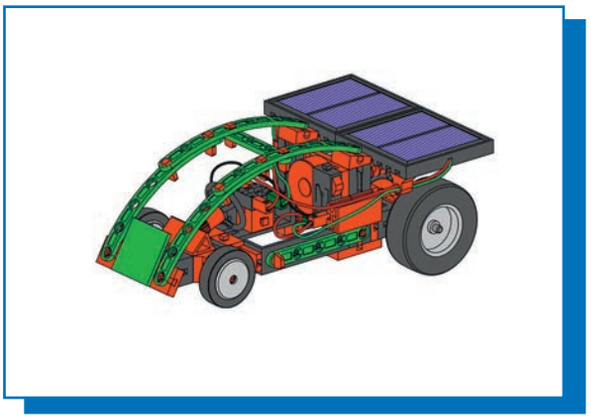

Solarfahrzeug
Solar vehicle
Véhicule solaire
Voertuig op zonne-energie
Vehículo solar
Veículo solar
Veicolo ad energia solare
Электромобиль с солнечными батареями
太阳能电动车

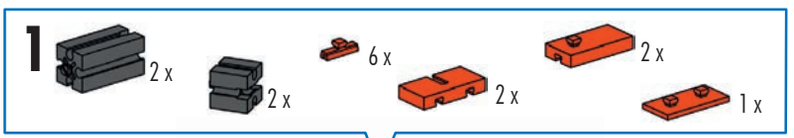

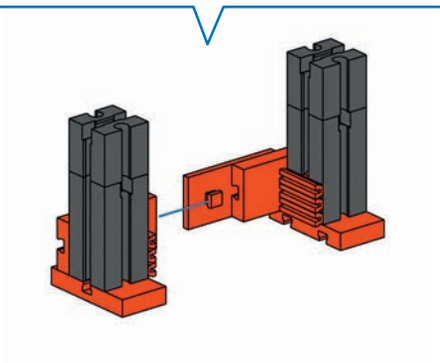

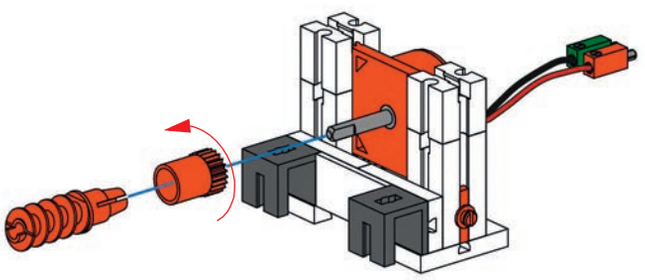

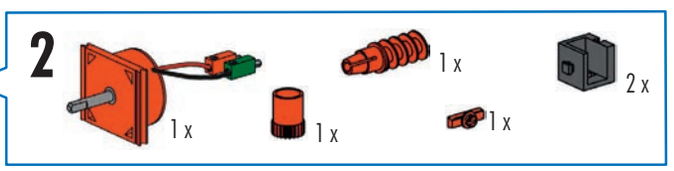

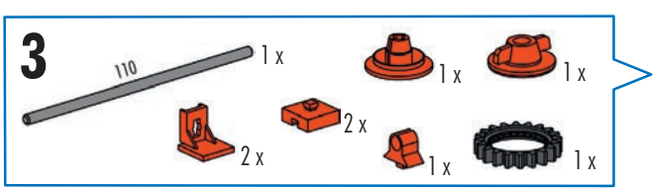

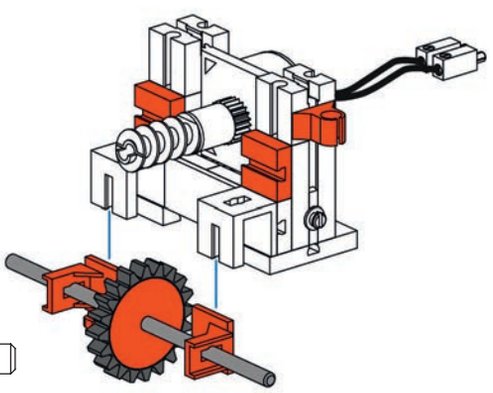

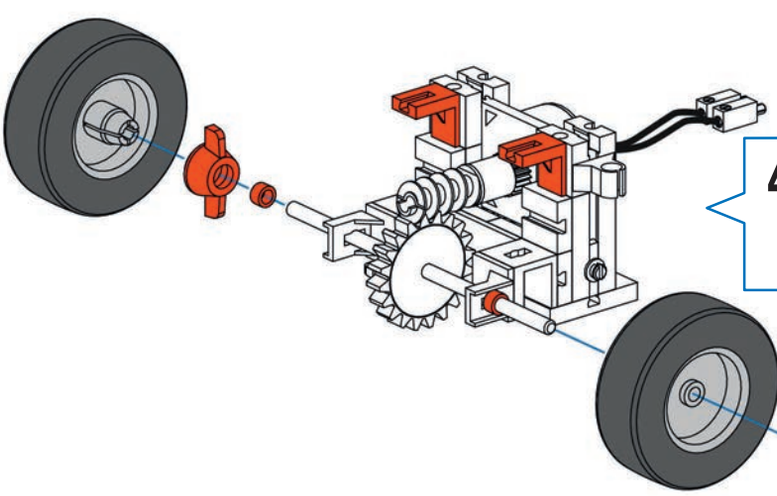

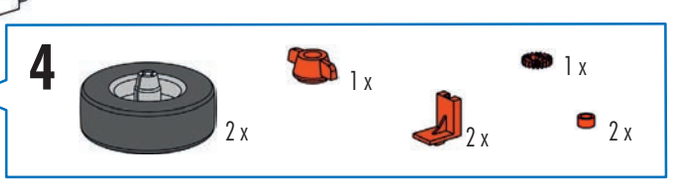

110 mm

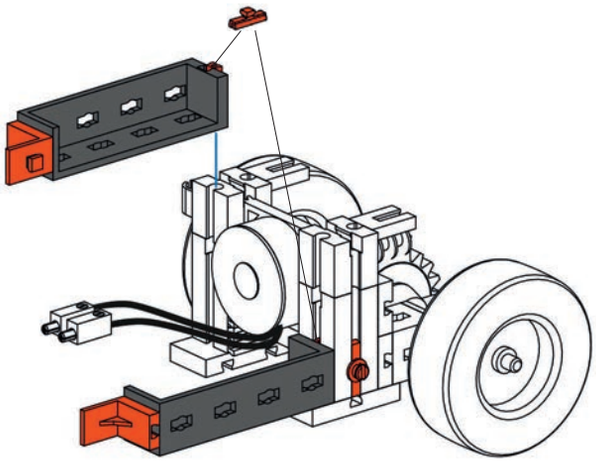

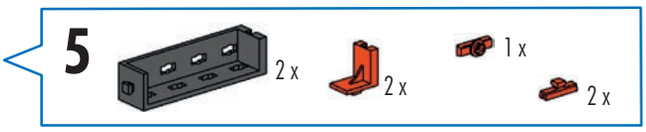
5
2 x
2 x
1 x
2 x

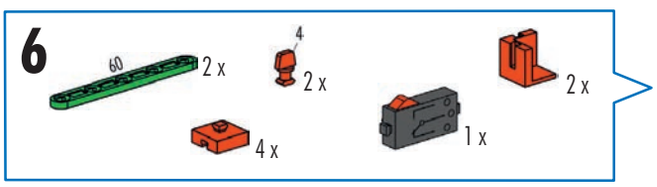
6
60
2 x
4
2 x
2 x
4 x
1 x

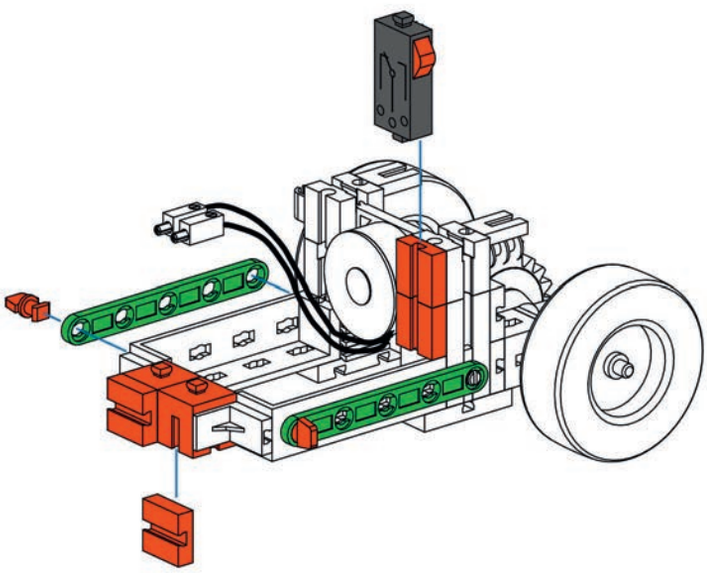

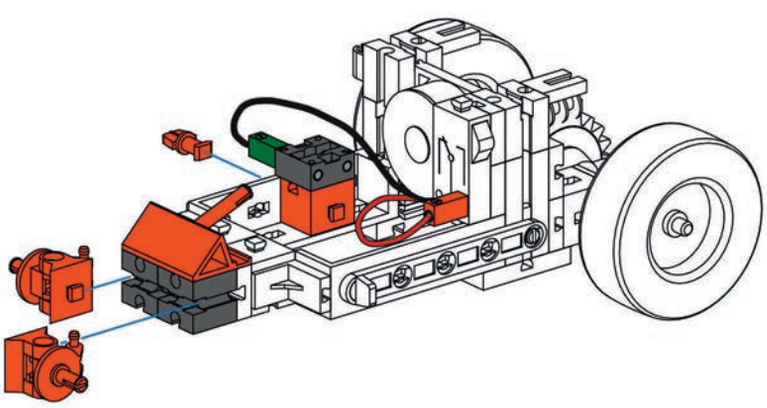

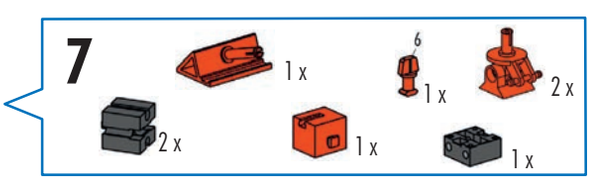
7
1 x
6
1 x
2 x
2 x
1 x
1 x

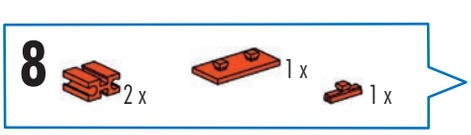
8
2 x
1 x
1 x

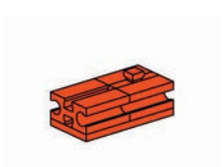

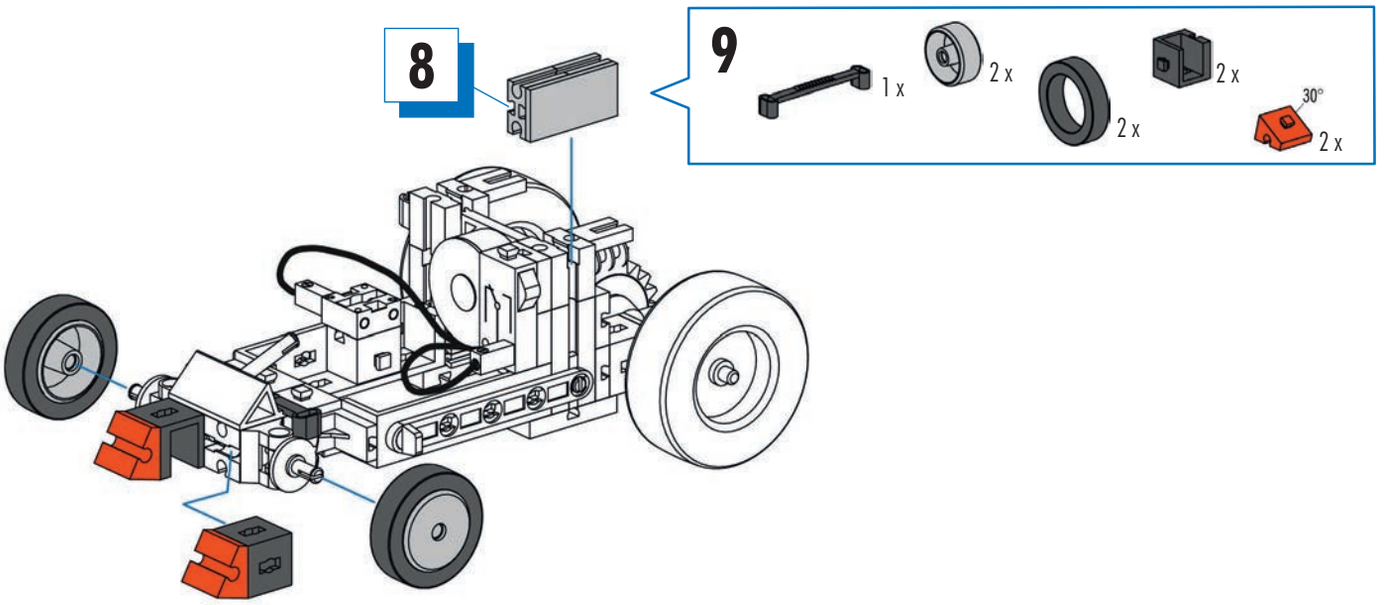
8
9
1 x
2 x
2 x
2 x
30°
2 x

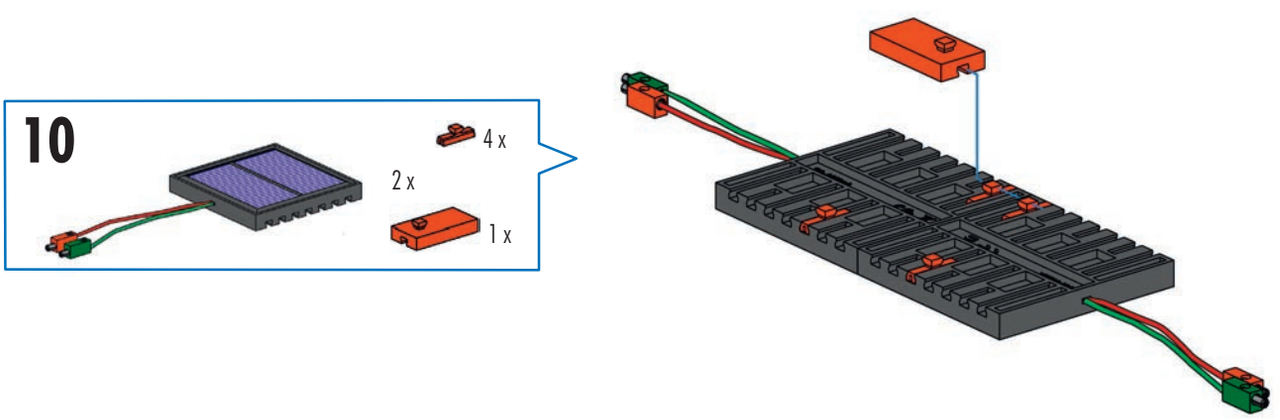
10
4 x
2 x
1 x

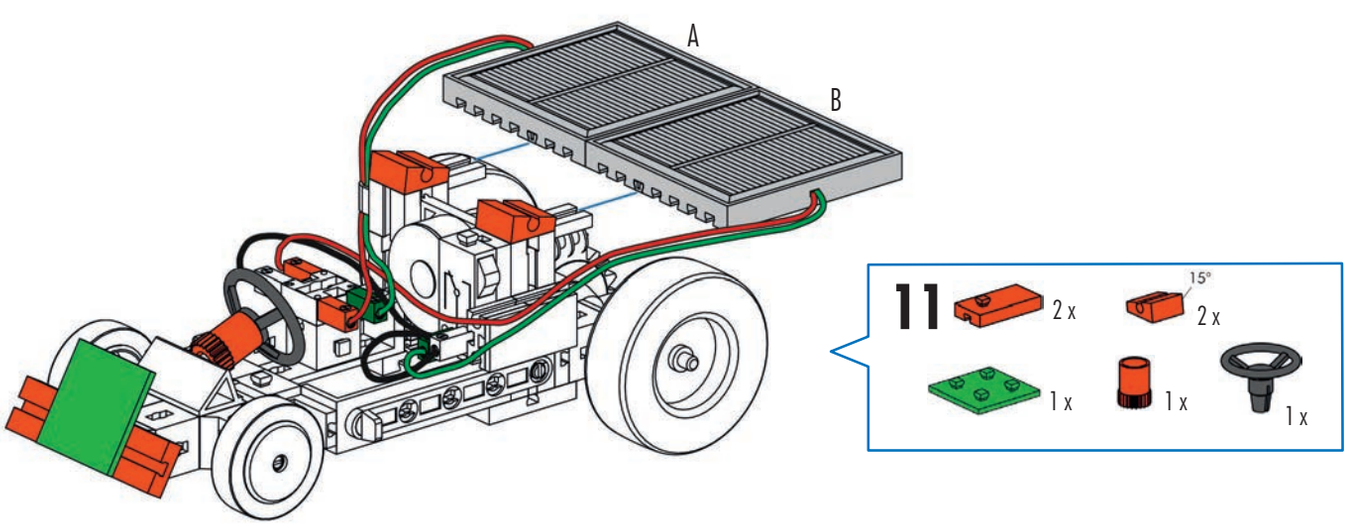
A
B
11
2 x
15°
2 x
1 x
1 x
1 x

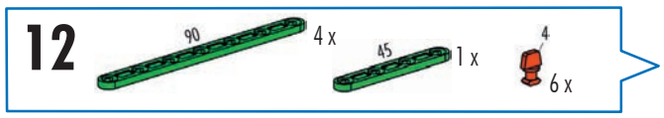
12
90
4 x
45
1 x
4
6 x

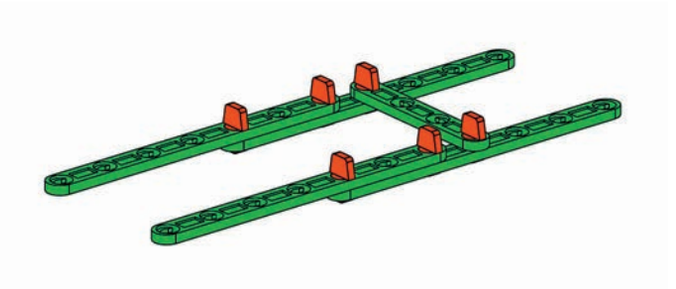

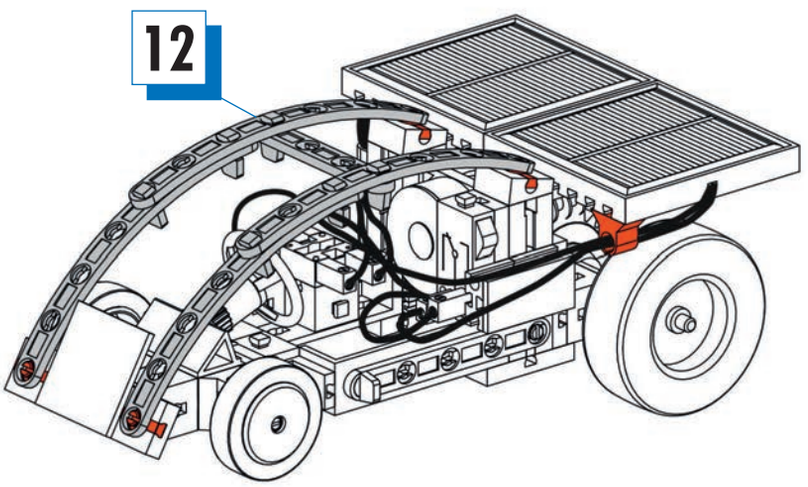
12

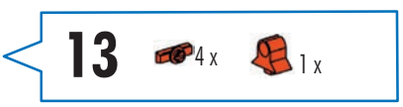
13
4 x
1 x

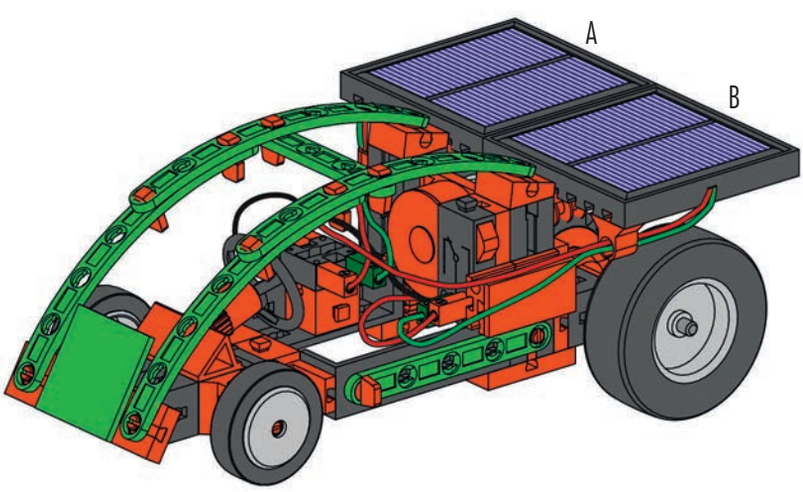
A
B

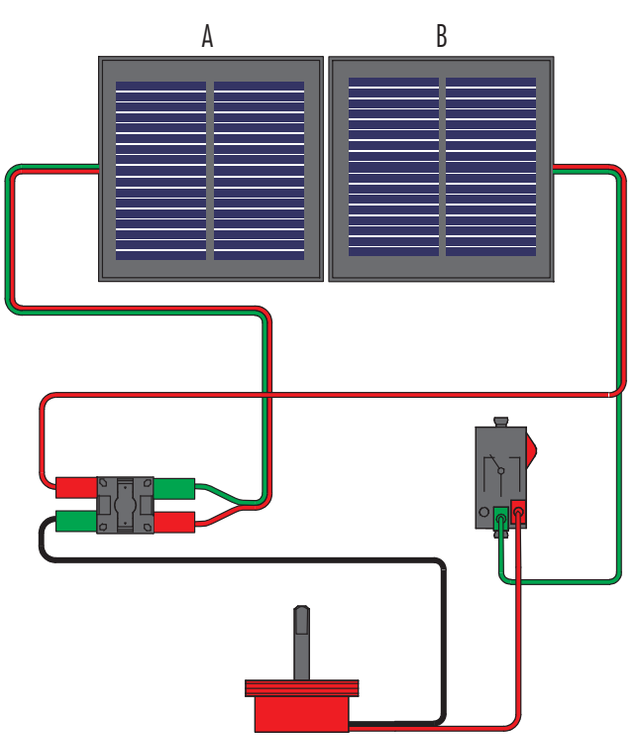
A
B

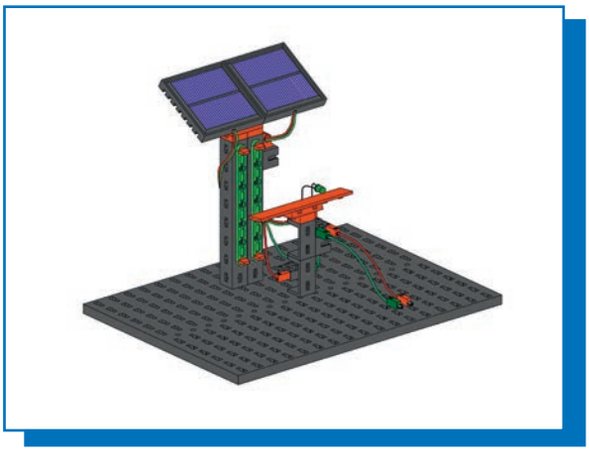

Solartankstelle
Solar charging station
Panneau solaire photovoltaïque
Oplaadstation op zonne-energie
Estación de servicio solar
Posto de abastecimento solar
Pannello solare fotovoltaico
Солнечная зарядная станция
电动车和太阳能充电站

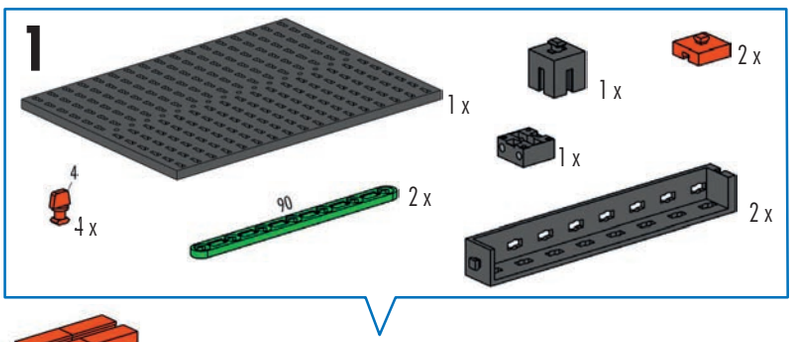

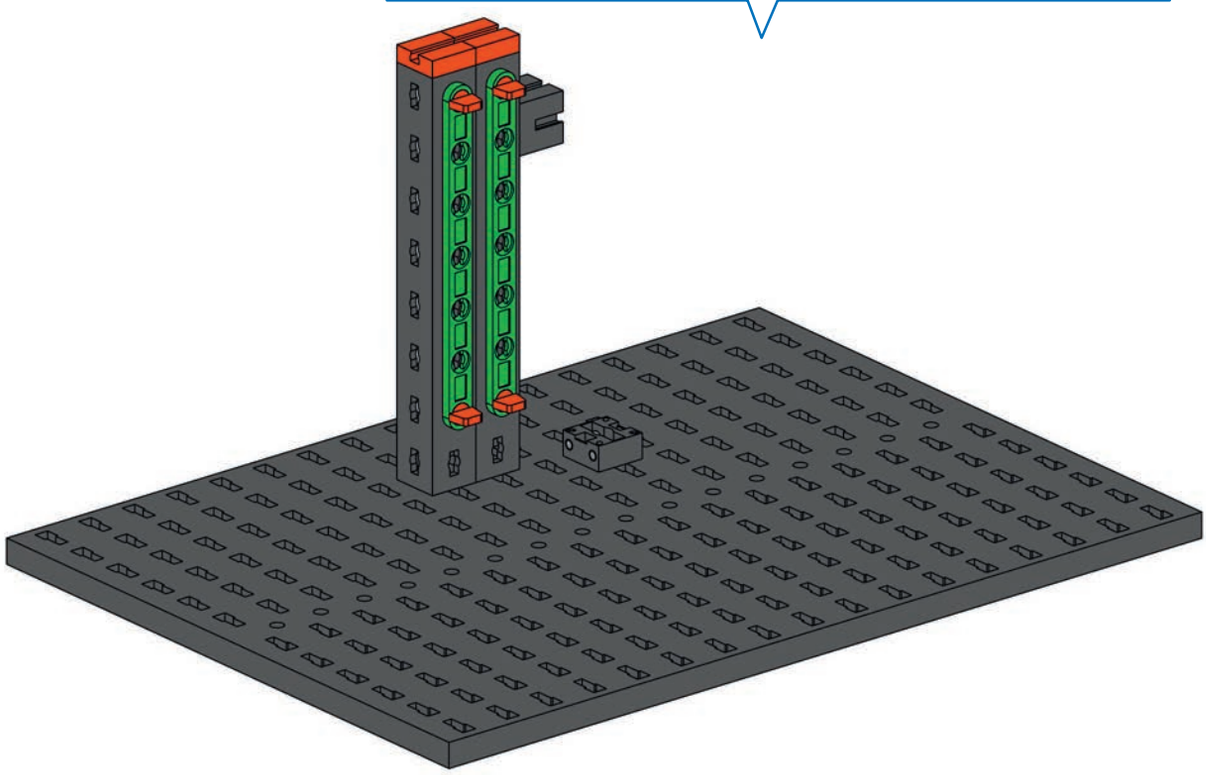

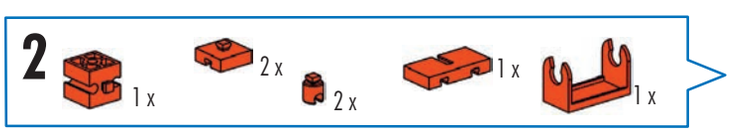

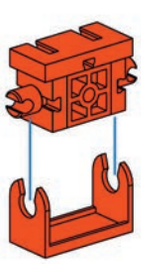

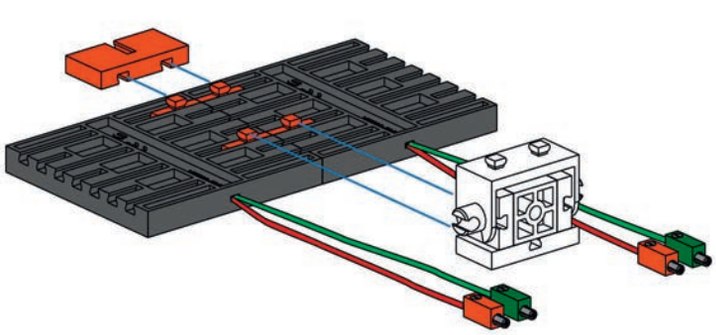

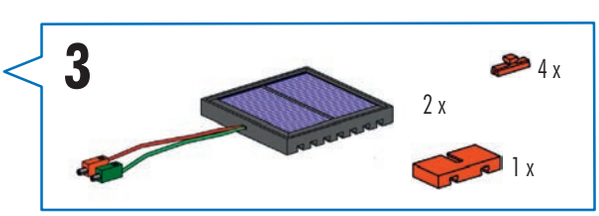

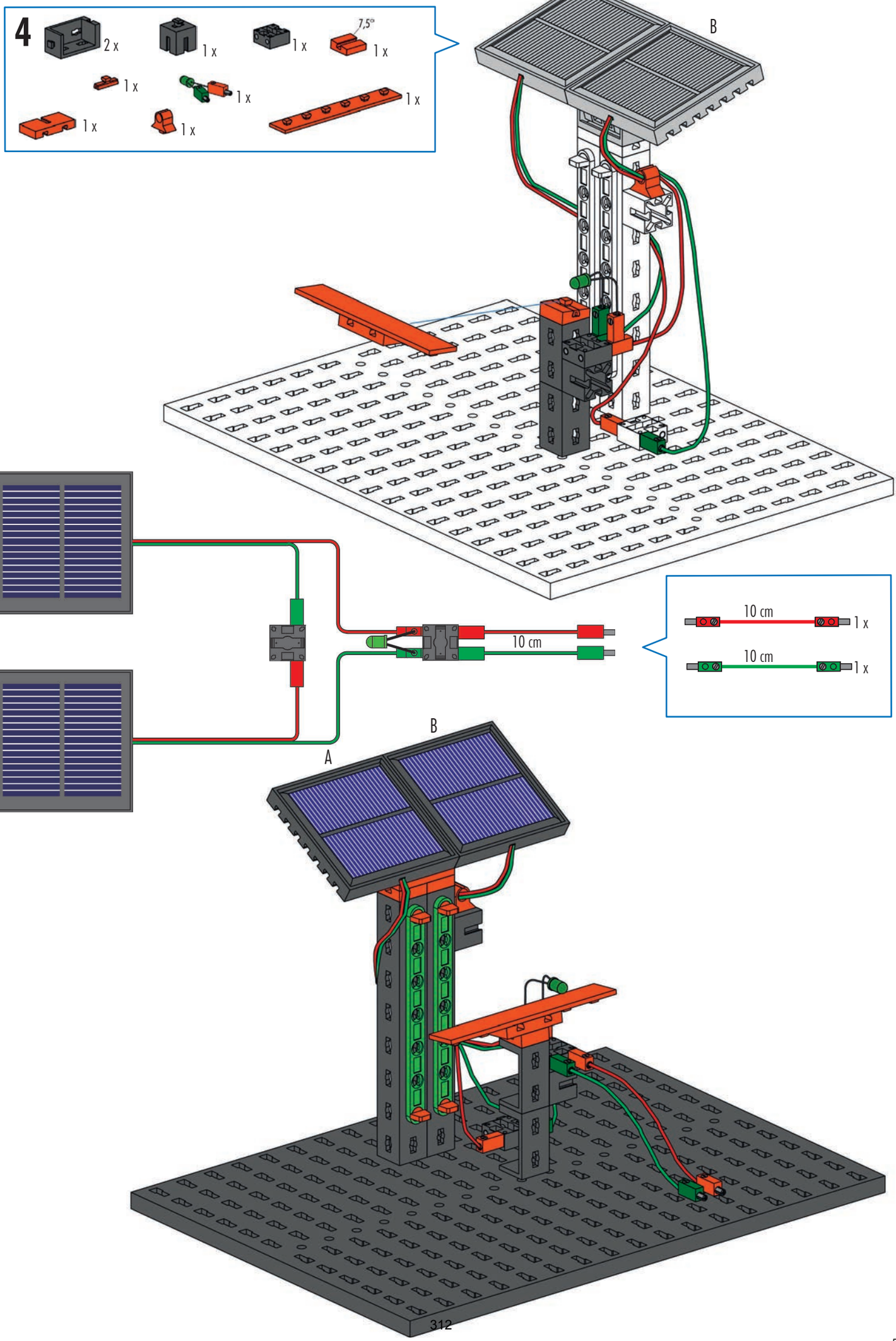
4
2 x
1 x
1 x
7,5°
1 x
1 x
1 x
1 x
1 x
A
B
B
A
10 cm
10 cm
1 x
10 cm
1 x
B
A
312

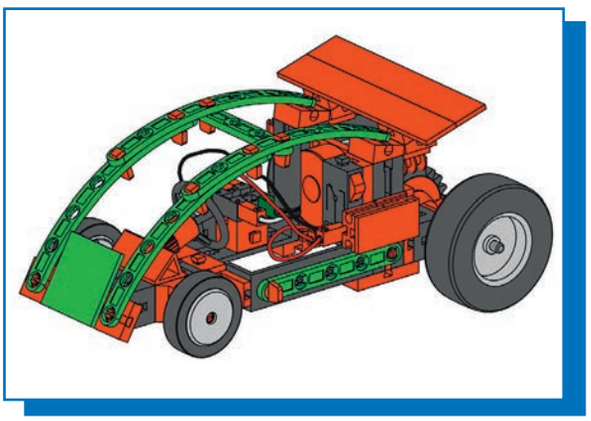

Elektrofahrzeug
Electric vehicle
Véhicule électrique
Elektrisch voertuig
Vehículo eléctrico
Veículo elétrico
Veicolo elettrico
Электромобиль
电动车

1-9

Seite	46
Page	46
Page	46
Bladzijde	46
Página	46
Pagina	46
Pagina	46
Страница	46
页次	46

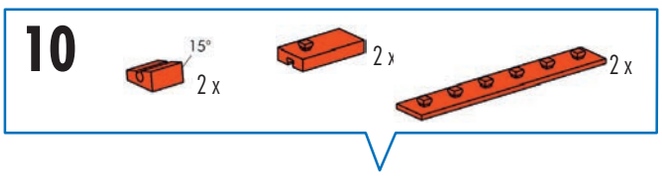

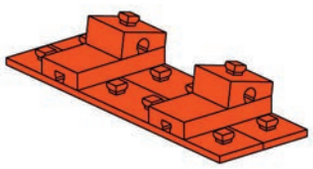

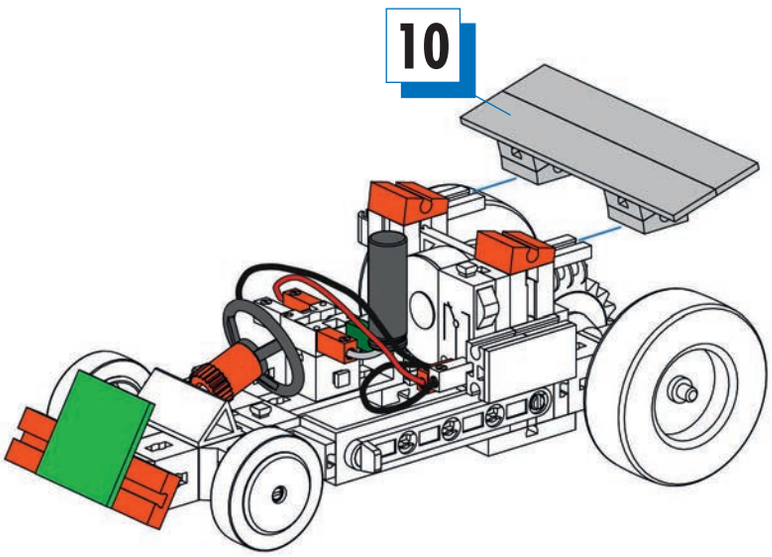

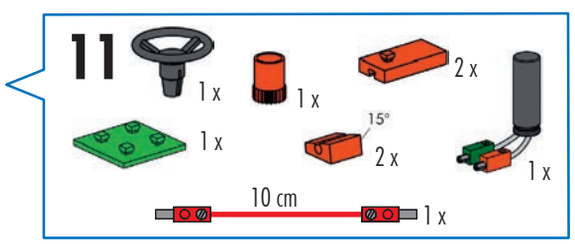

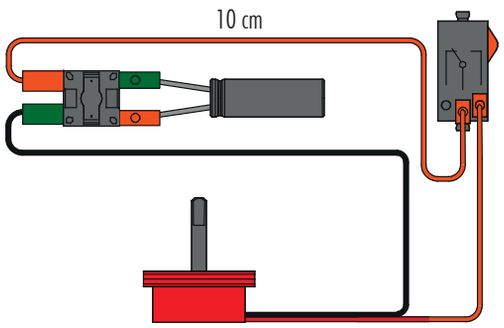

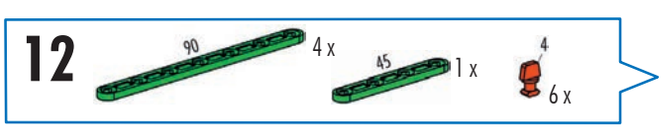

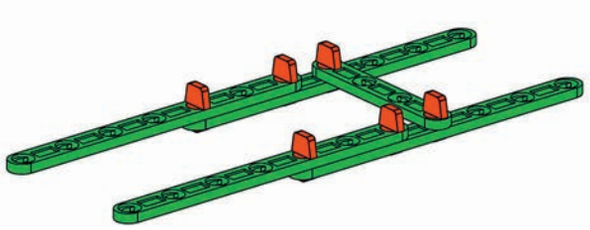

13 4 x

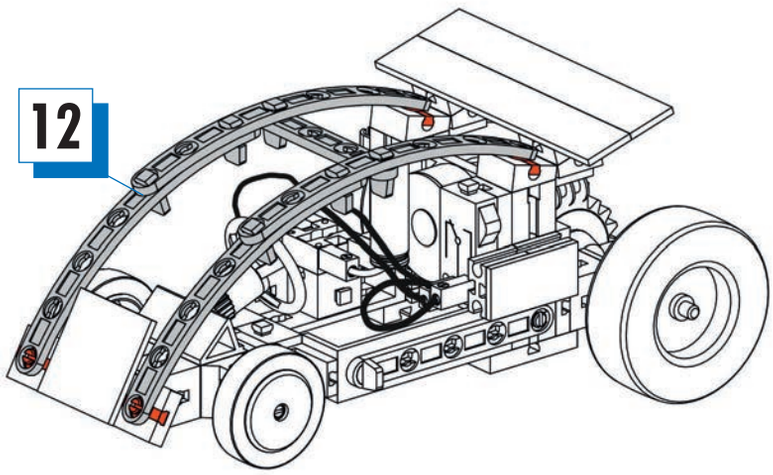
12

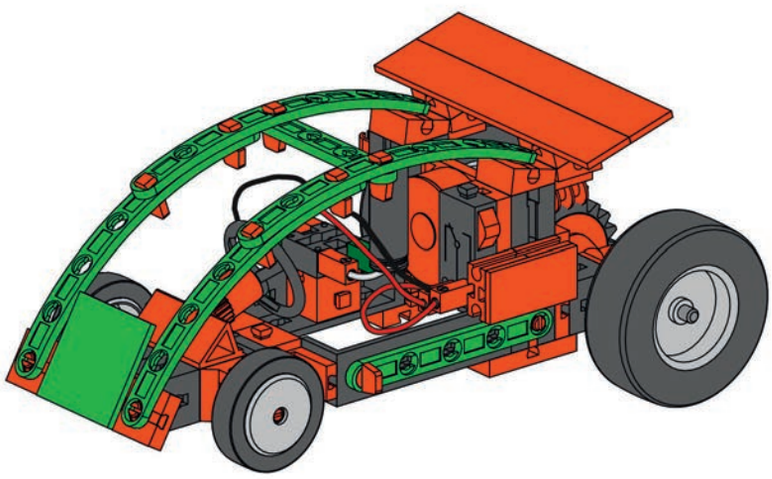

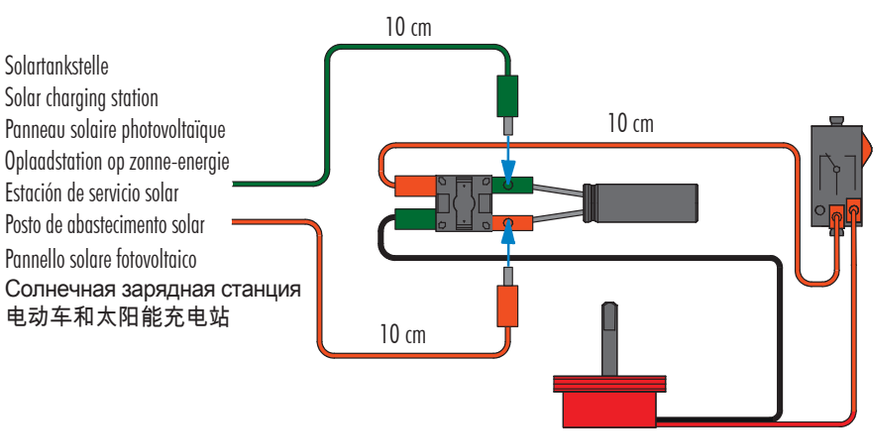
10 cm
10 cm
10 cm
Solartankstelle
Solar charging station
Panneau solaire photovoltaïque
Oplaadstation op zonne-energie
Estación de servicio solar
Posto de abastecimento solar
Pannello solare fotovoltaico
Солнечная зарядная станция
电动车和太阳能充电站

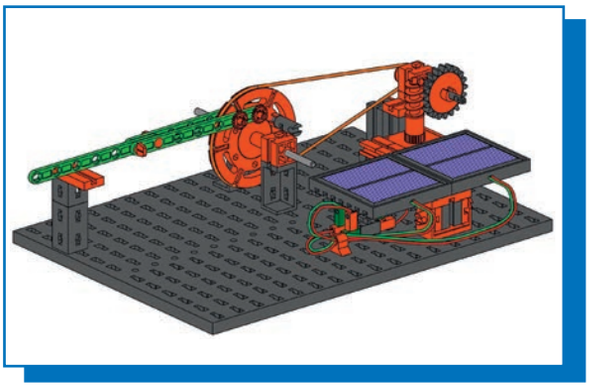

Schranke
Barrier
Barrière

Spoorboom
Barrera
Barreira

Barriera
Шлагбаум
栏杆

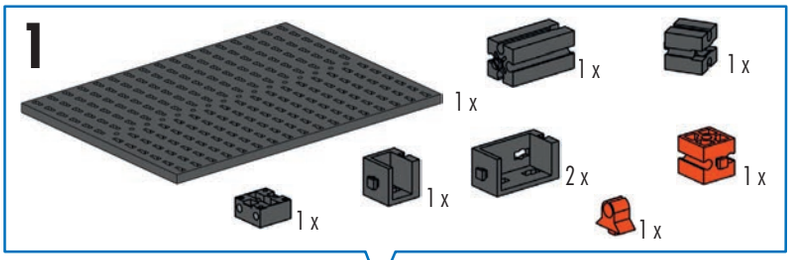

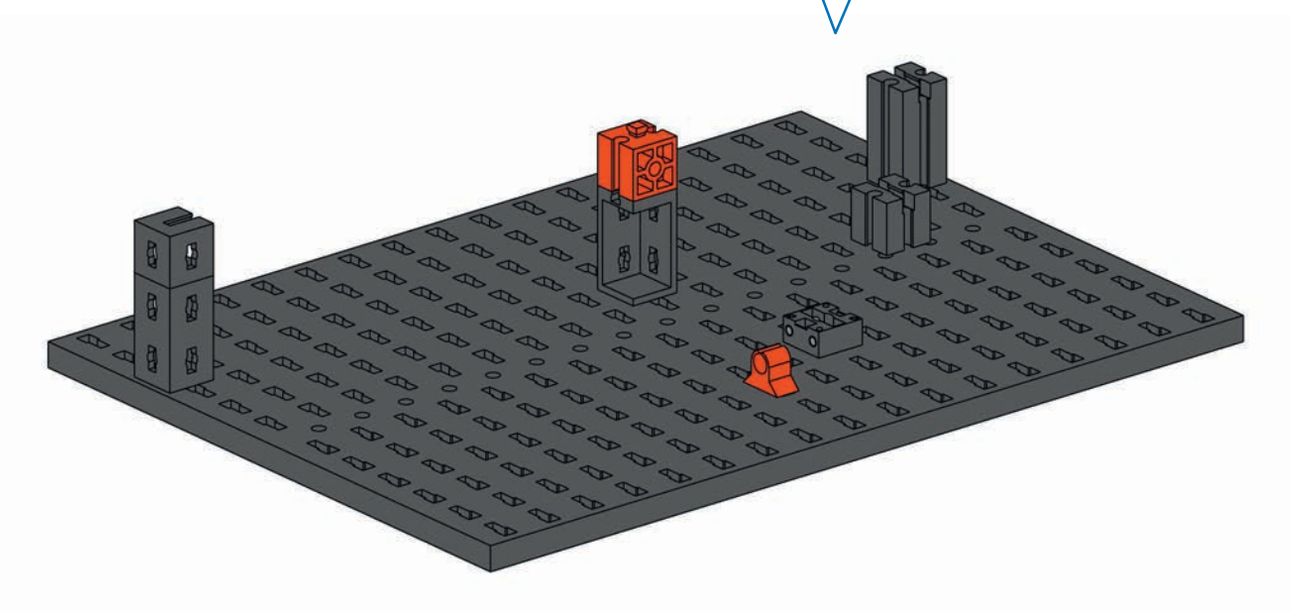

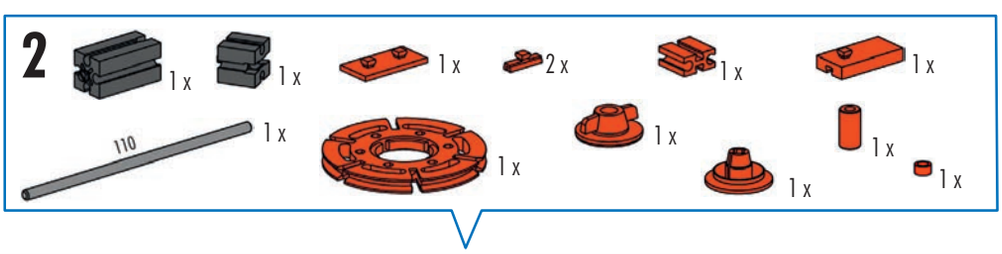

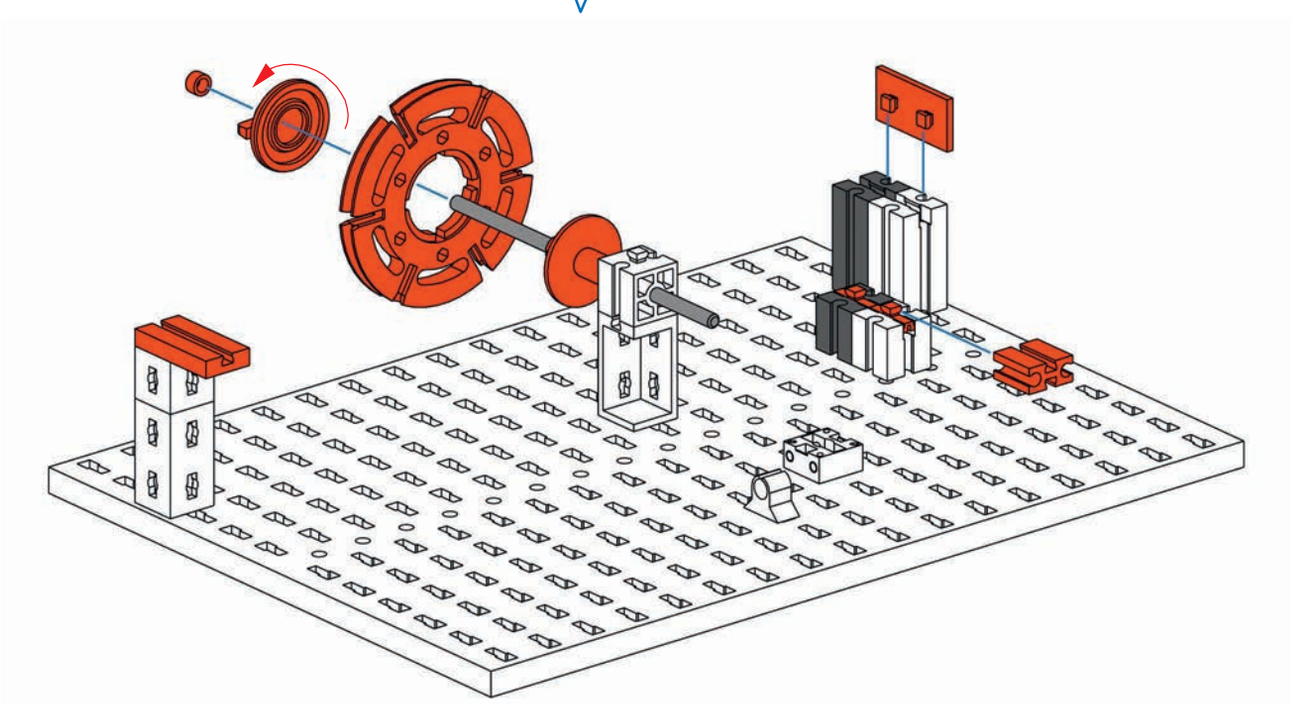

110 mm

315

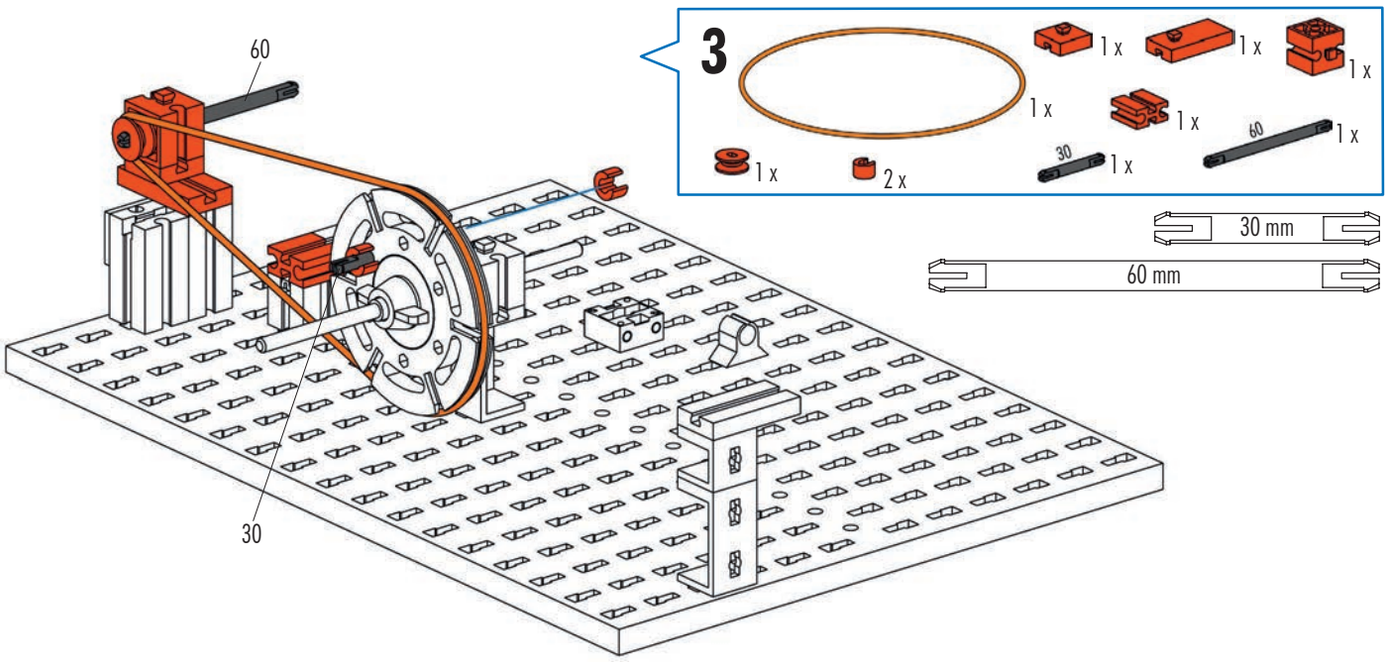
3
1 x
1 x
1 x
1 x
1 x
1 x
2 x
1 x
1 x
30
60
30 mm
60 mm
60
30

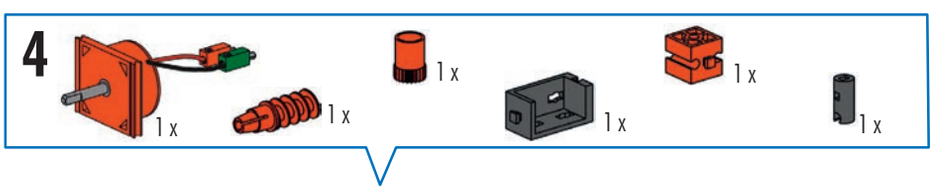
4
1 x
1 x
1 x
1 x
1 x
1 x

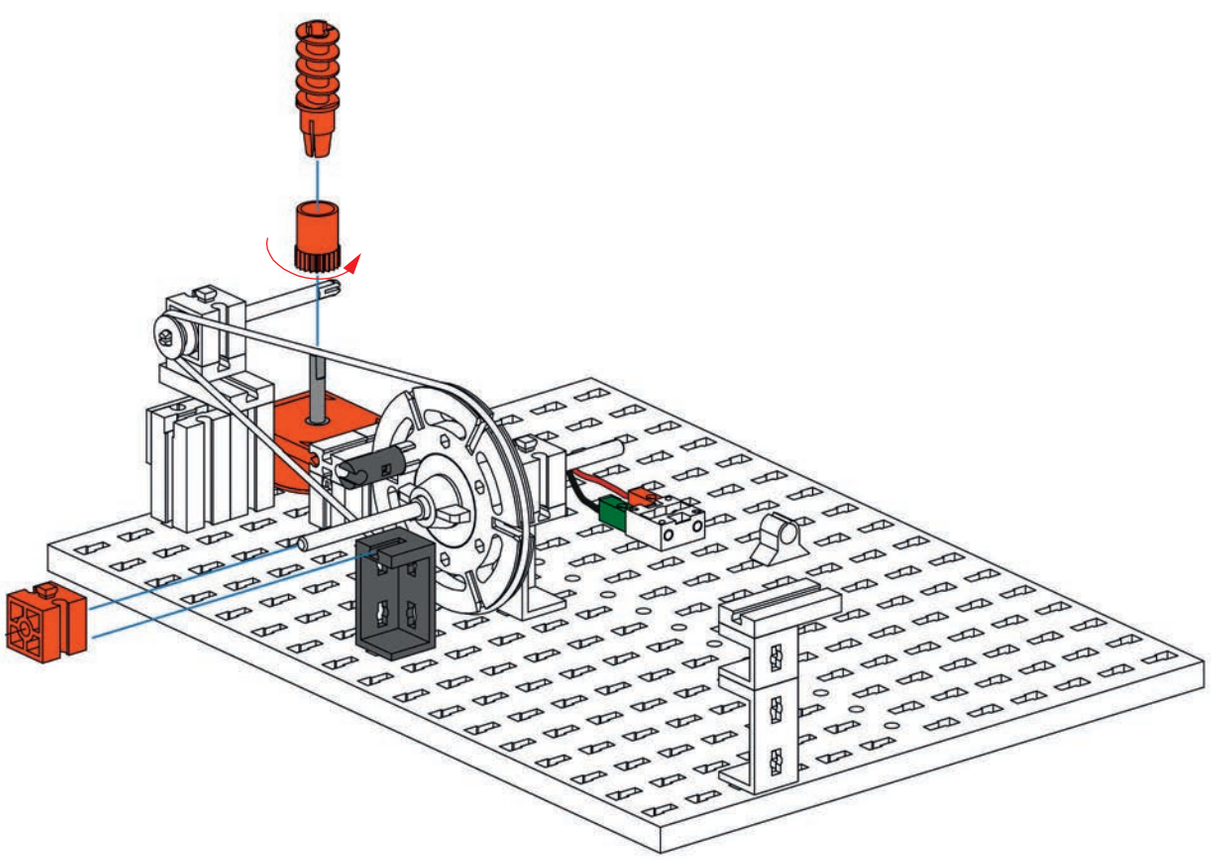

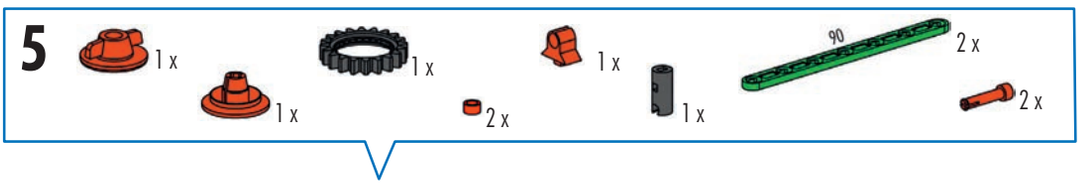
5
1 x
1 x
1 x
1 x
2 x
1 x
90
2 x
2 x

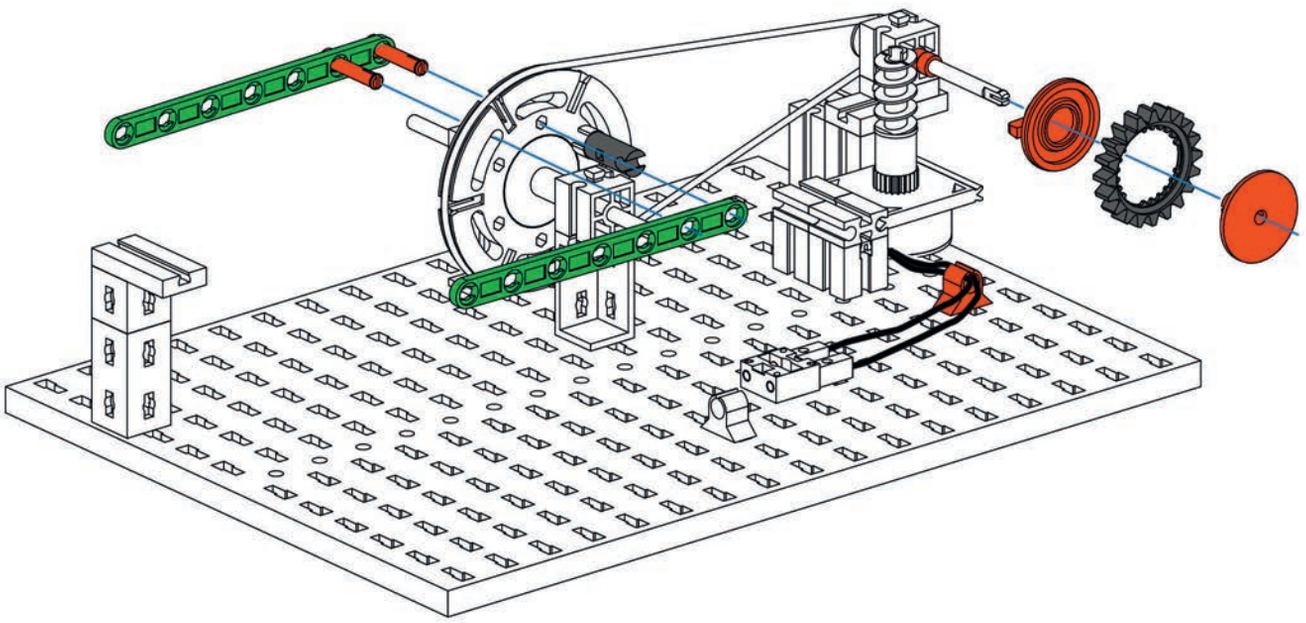

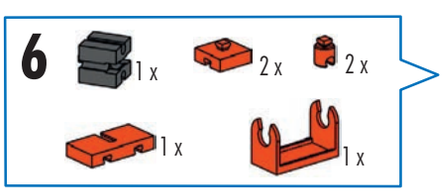
6
1 x
2 x
2 x
1 x
1 x

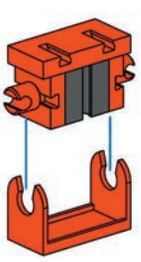

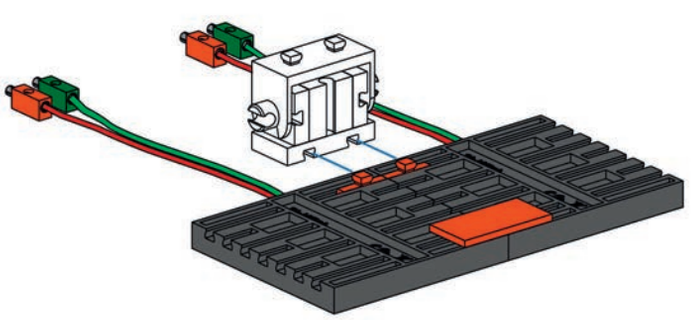

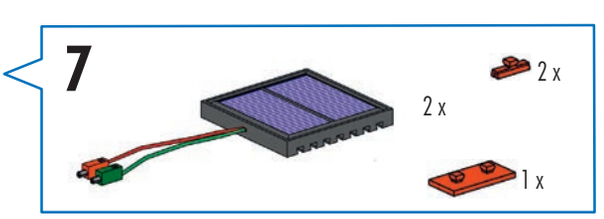
7
2 x
2 x
1 x

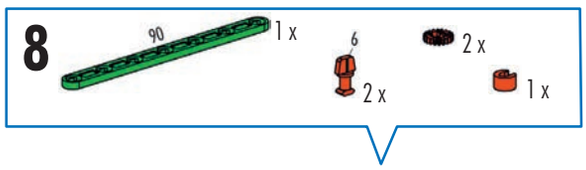
8
90
1 x
6
2 x
2 x
1 x

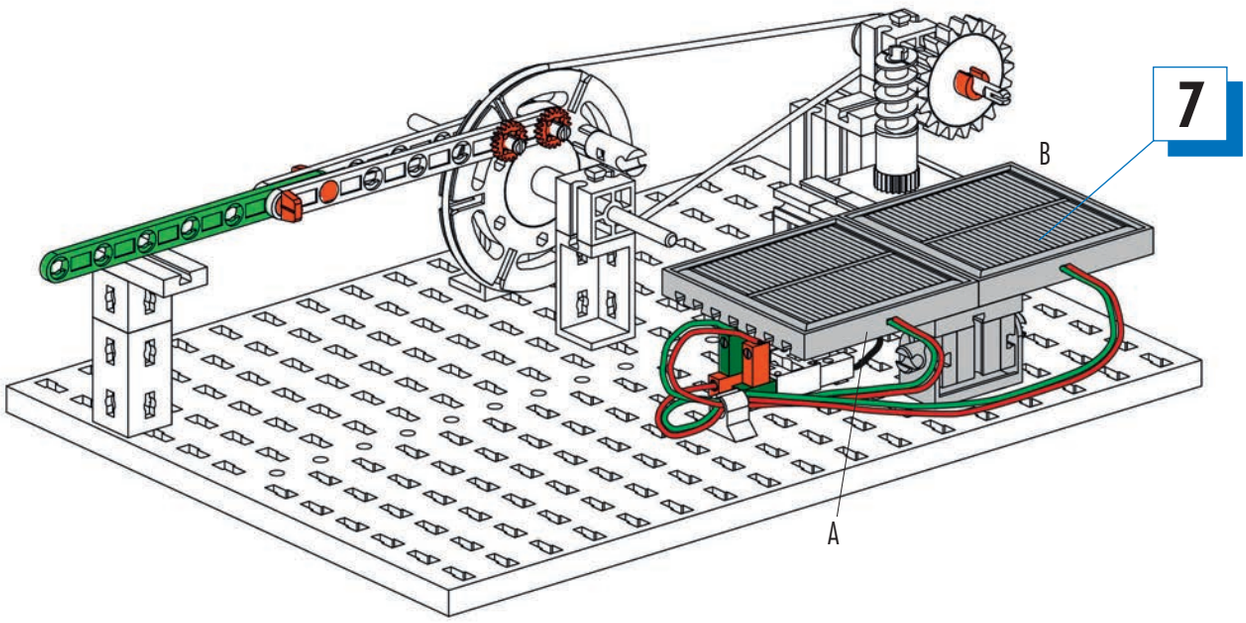
7
B
A

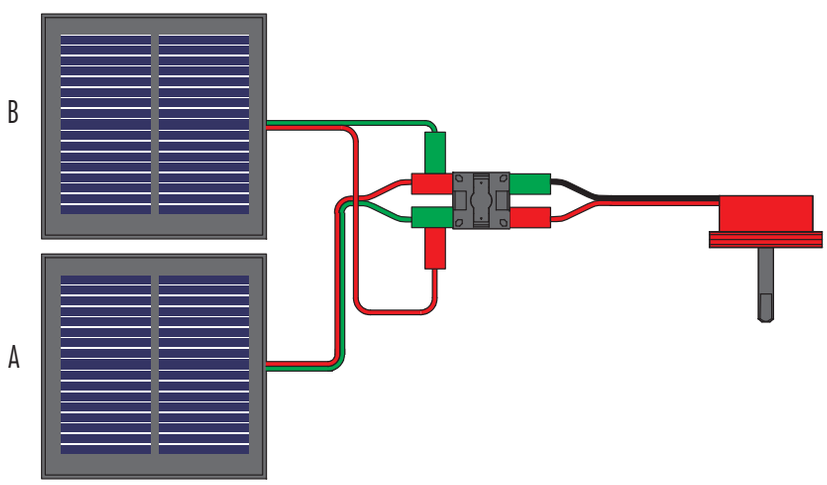
B
A

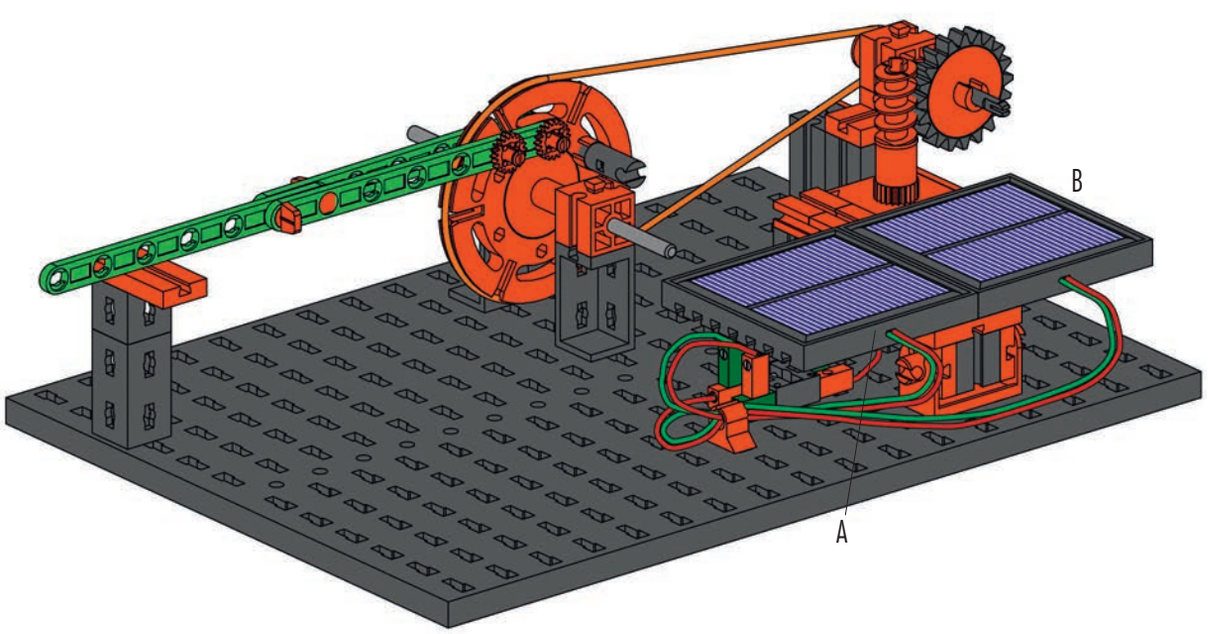
B
A

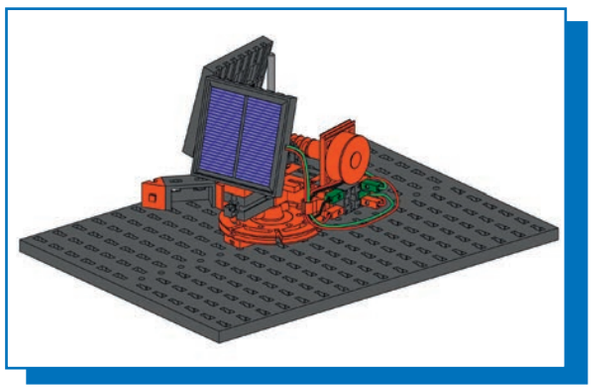

Solarnachführung
Solar tracking
Orientation du panneau solaire
Zonvolgsysteem
Seguimiento solar
Traçamento solar
Orientamento pannelli solari
Слежение за солнцем
太阳跟踪仪

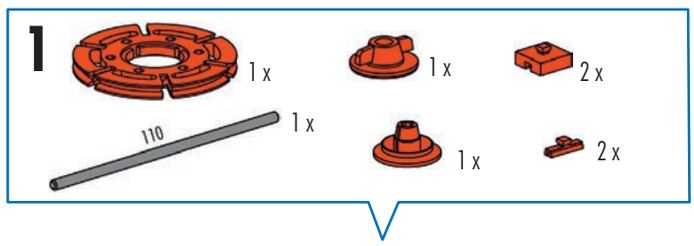

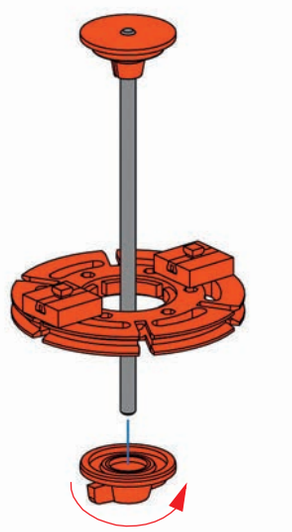

110 mm

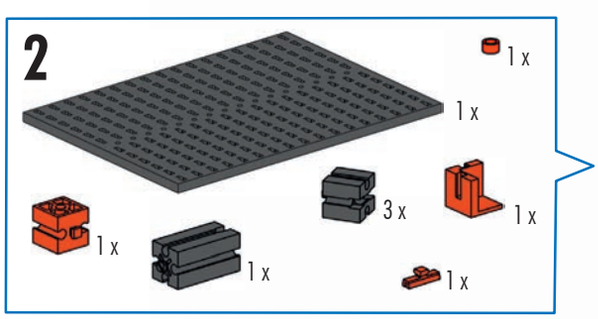

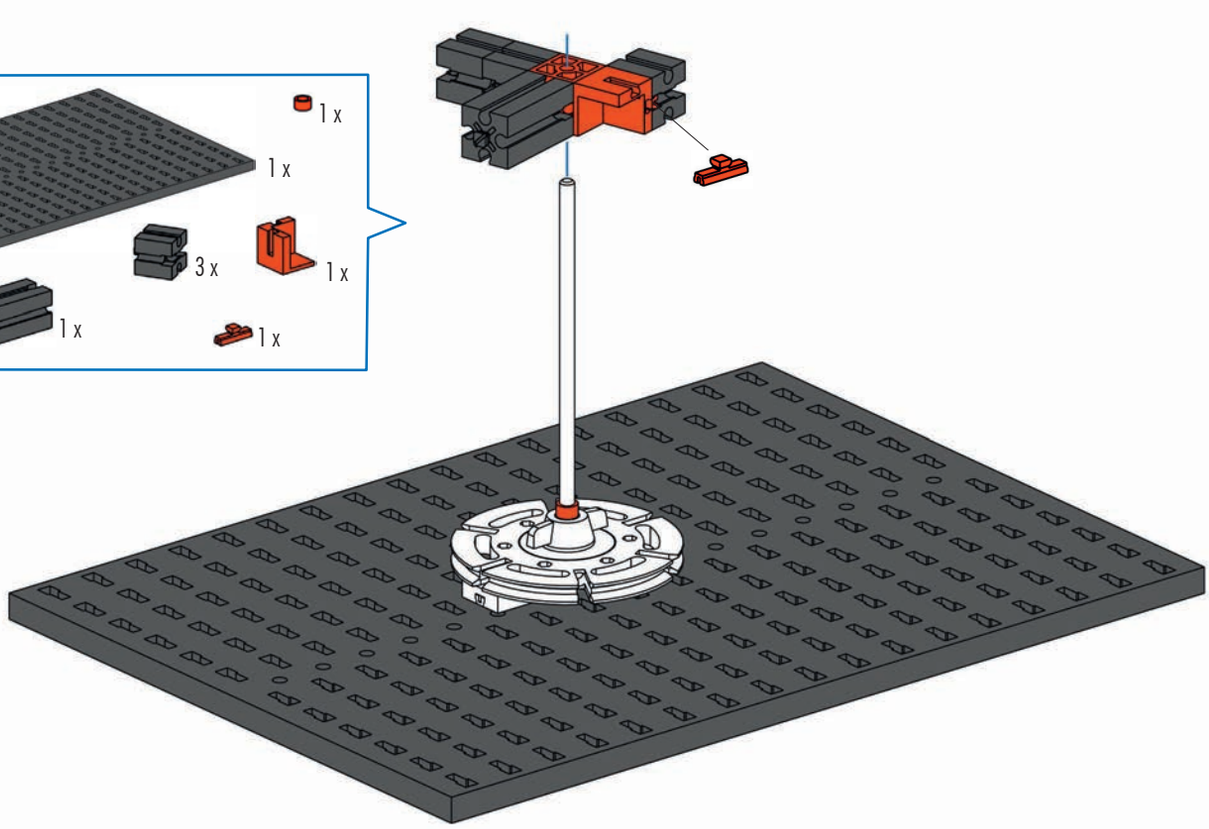

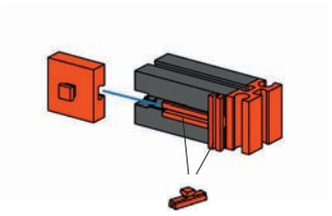

3
1 x
1 x
2 x
1 x

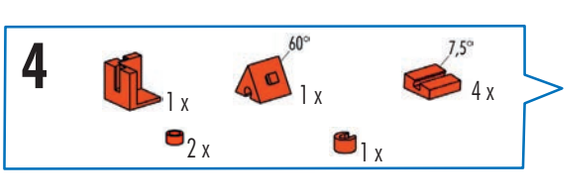
4
1 x
60°
1 x
7,5°
4 x
2 x
1 x

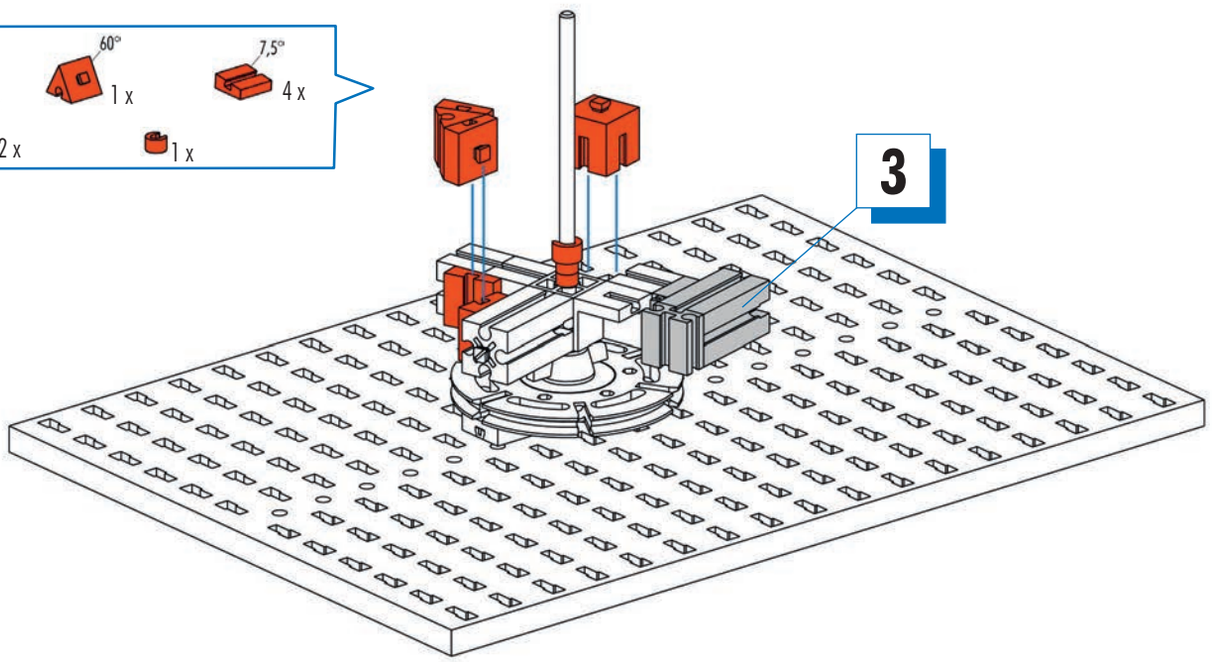
3

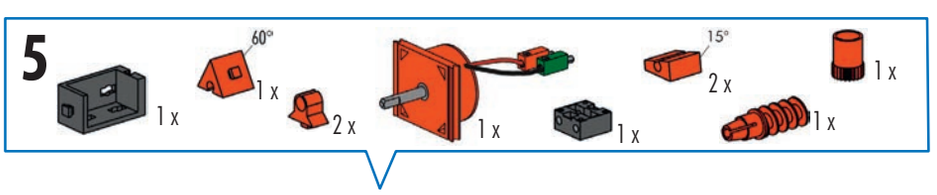
5
1 x
60°
1 x
2 x
1 x
1 x
15°
2 x
1 x
1 x

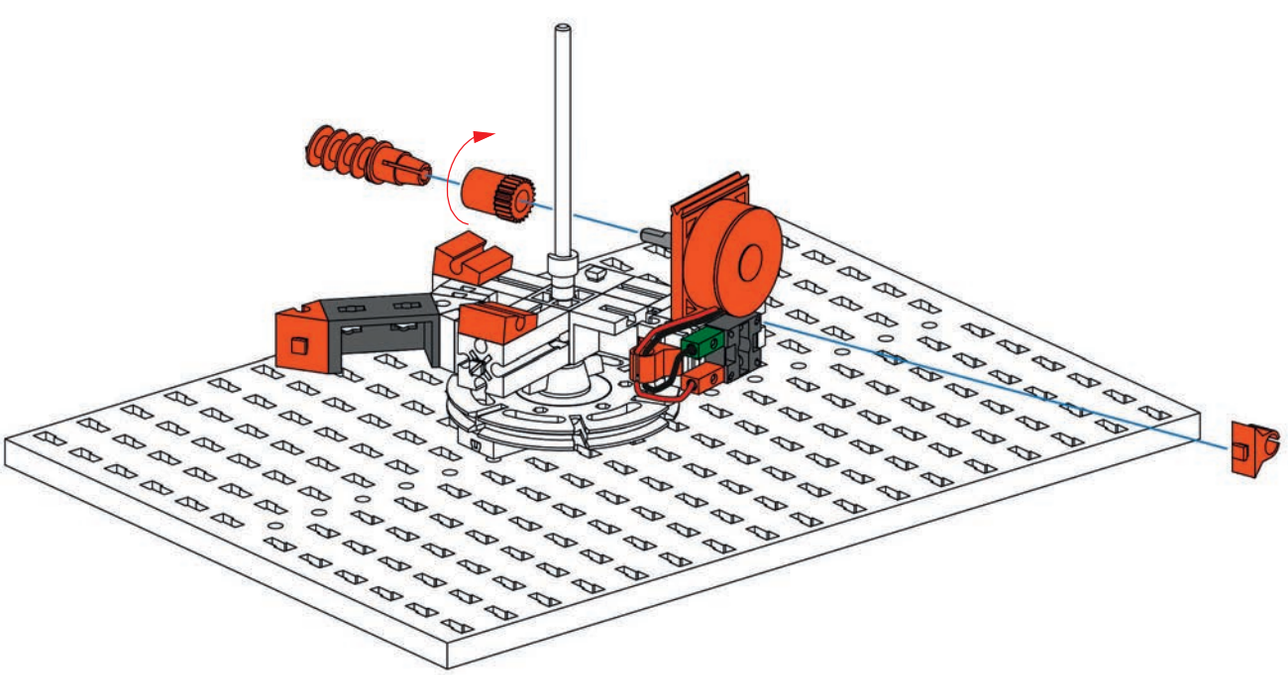

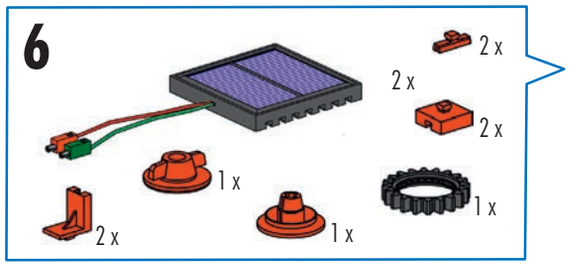

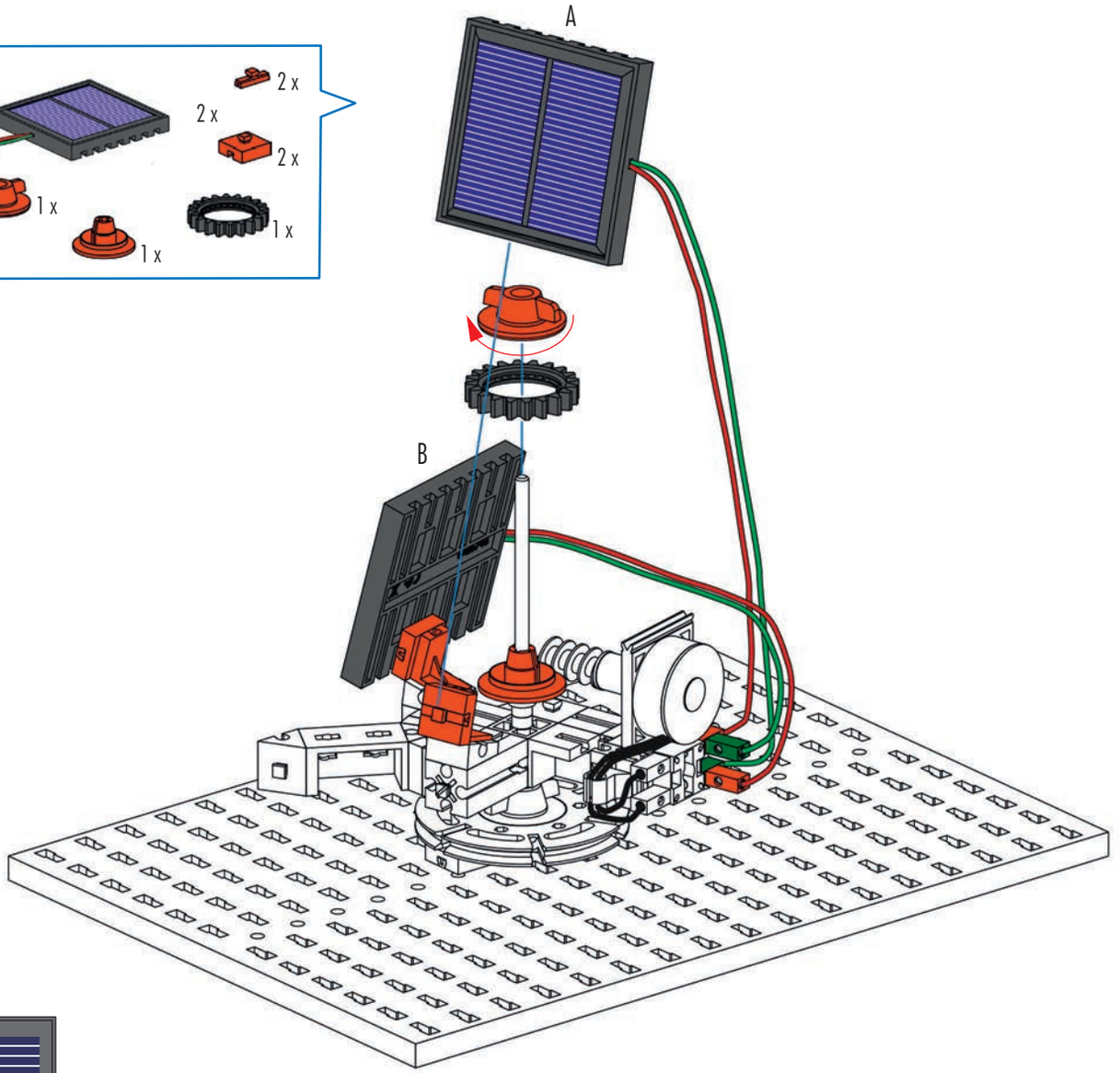

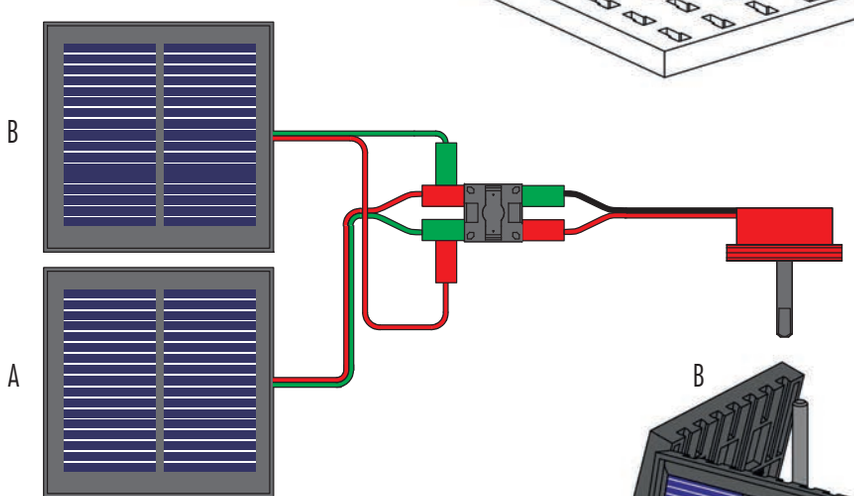

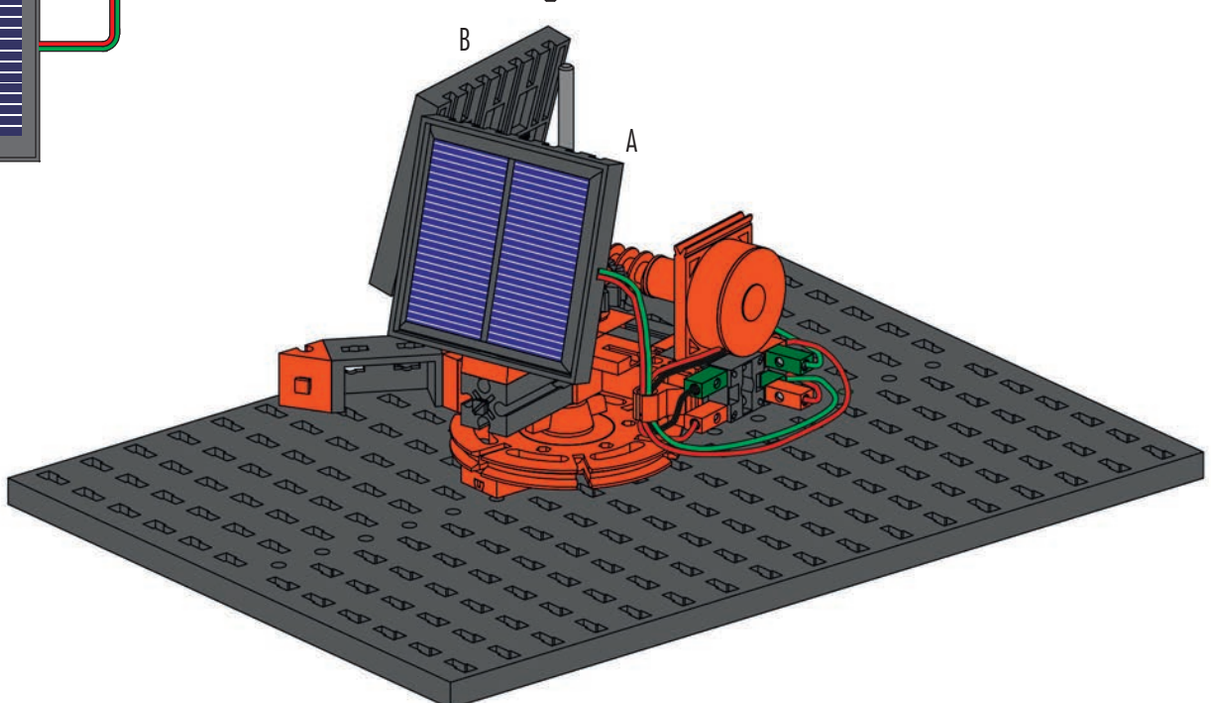

321

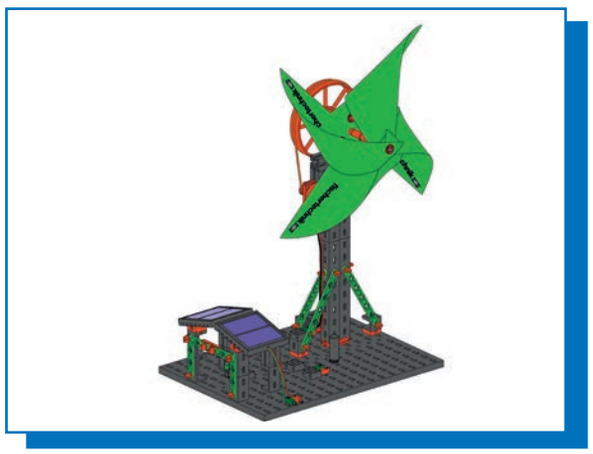

Ökohaus
Eco-house
Maison écologique
Ecologisch huis
Casa ecológica
Casa ecológica
Eco casa
Эко-дом
生态房屋

1

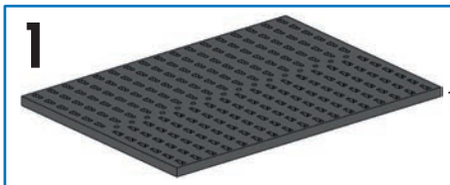

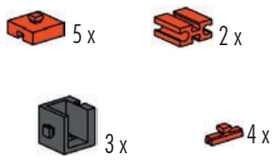

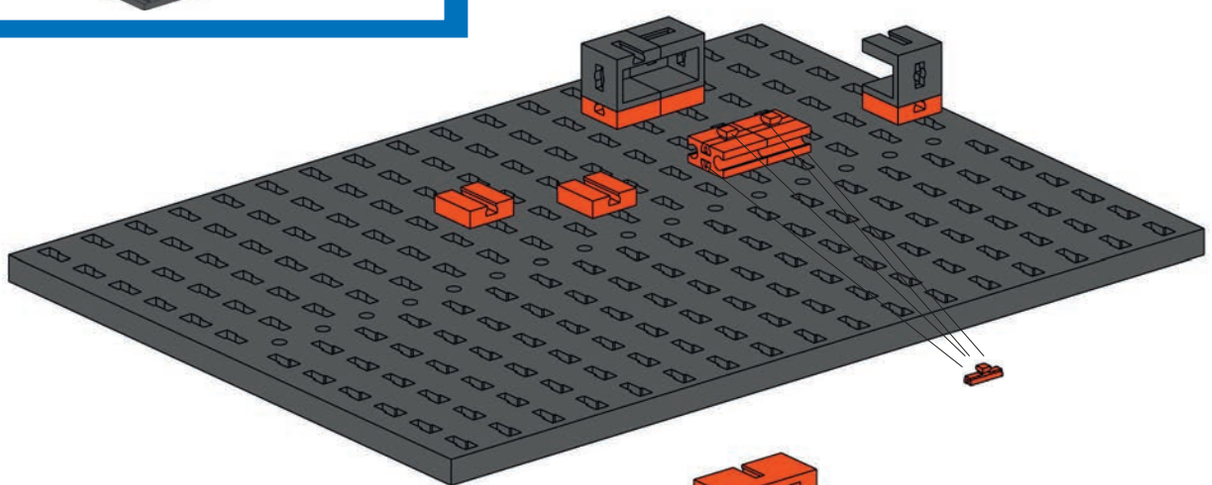

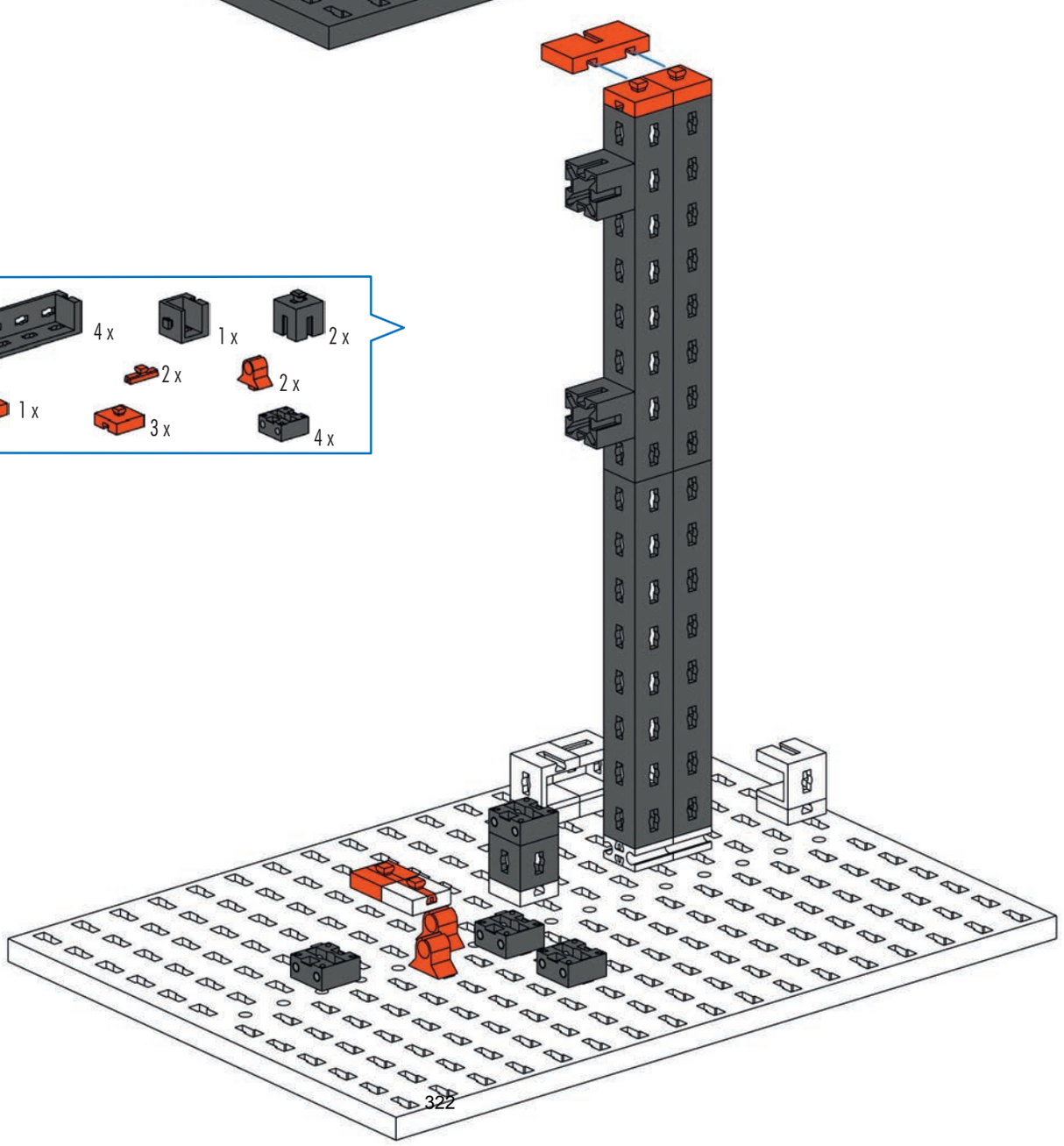

2

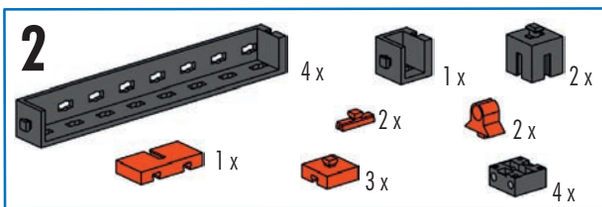

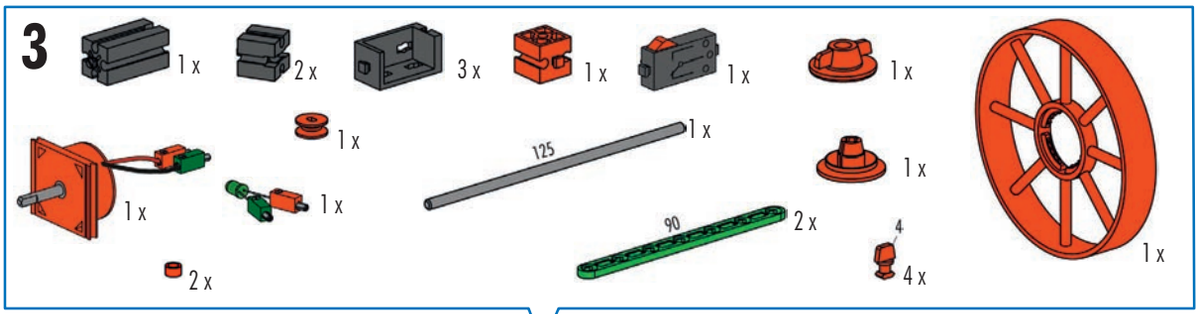

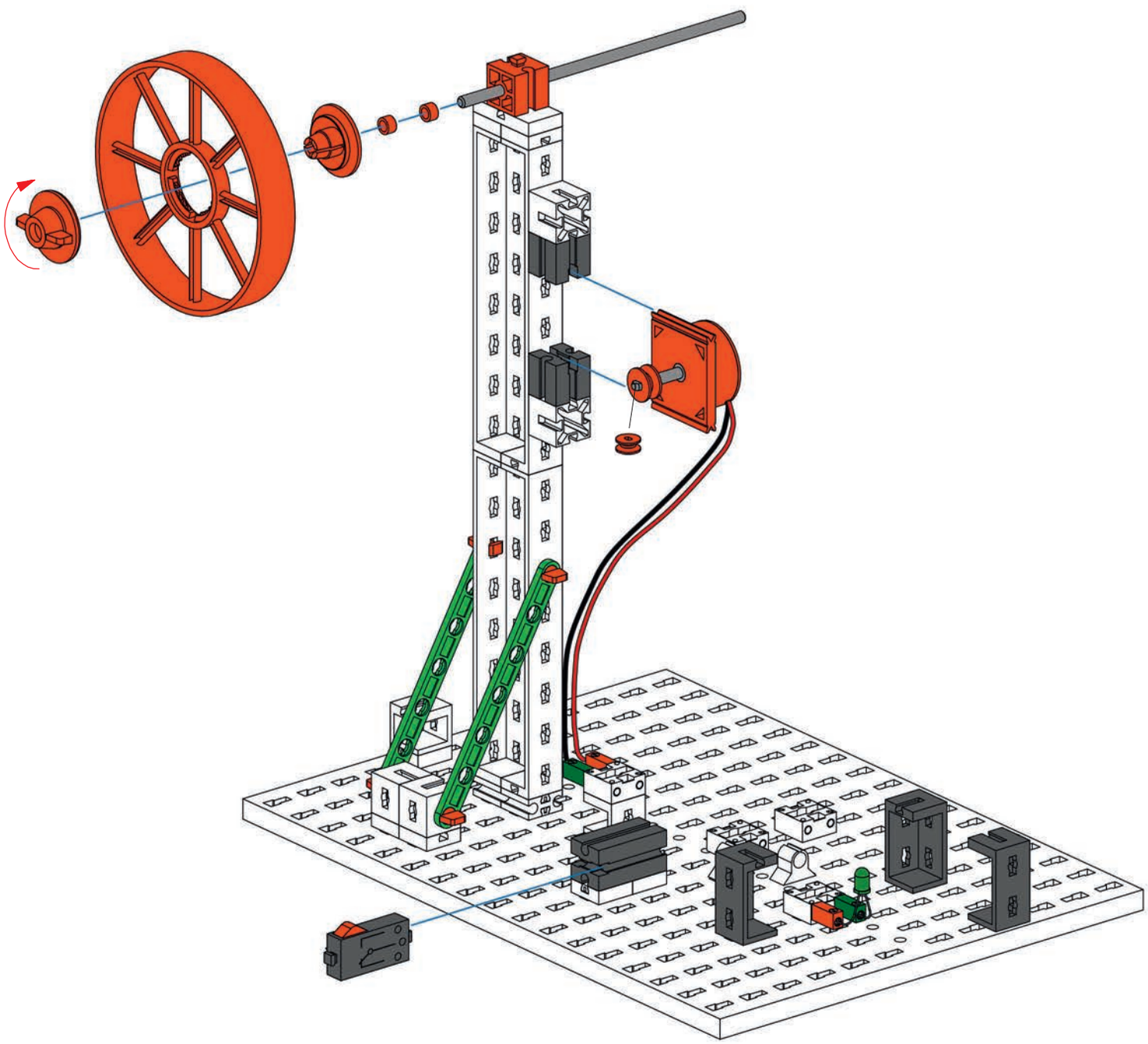

125 mm

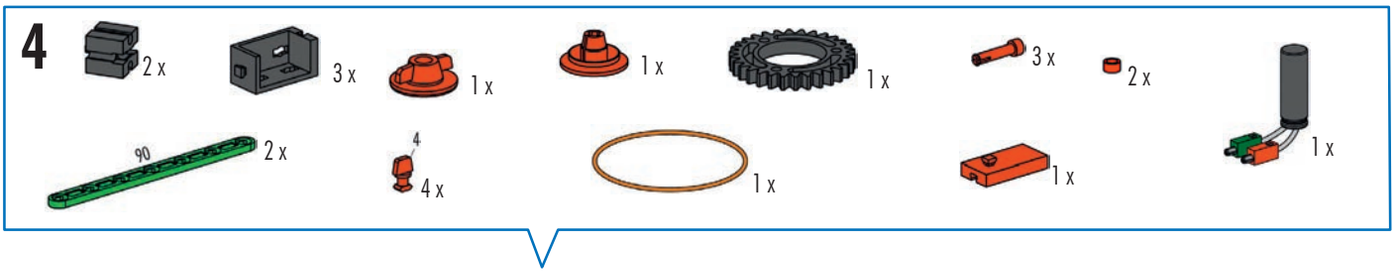
4
2 x
3 x
1 x
1 x
1 x
3 x
2 x
1 x
90
2 x
4
4 x
1 x
1 x

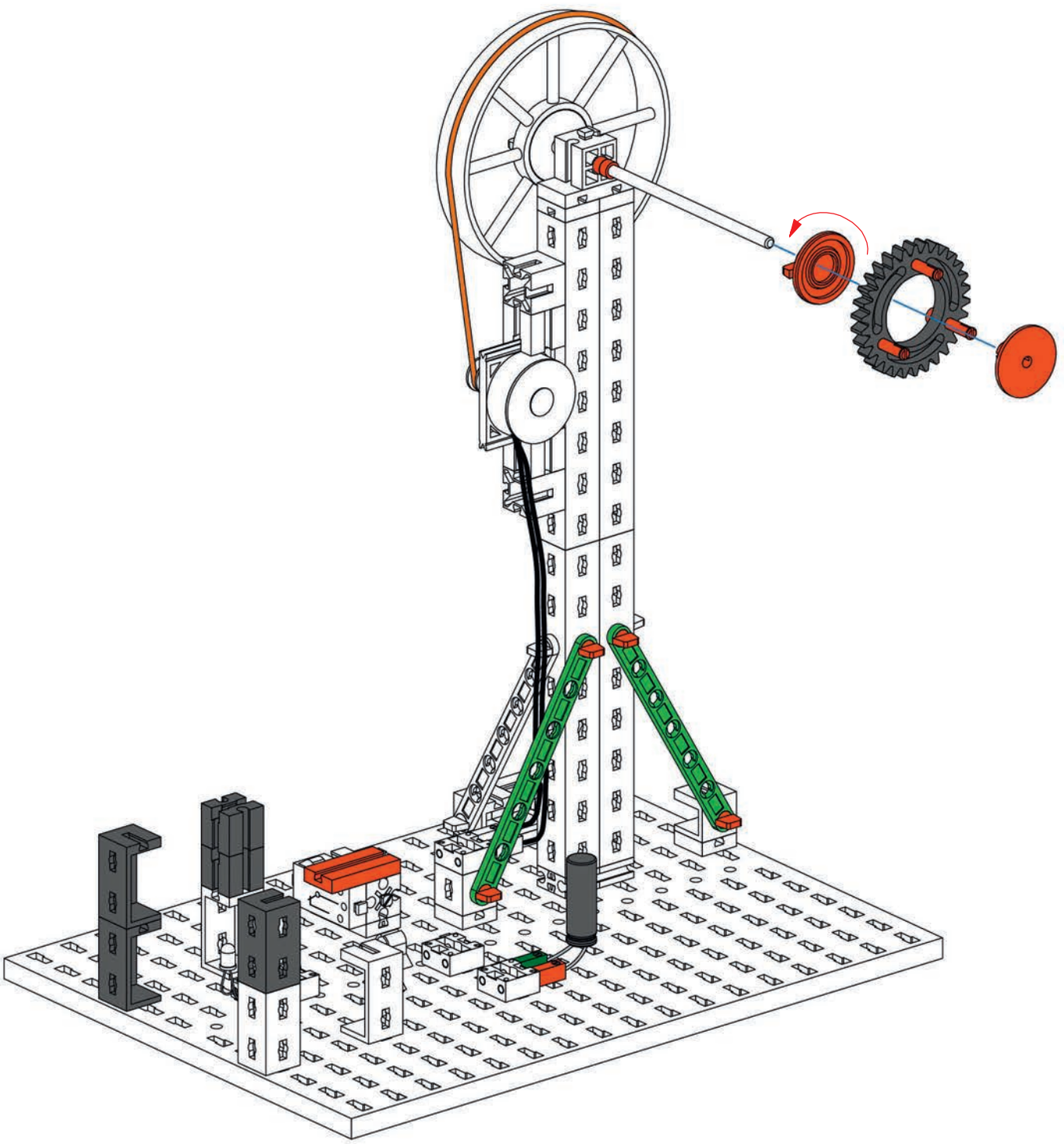

5

1 x

2 x

2 x

1 x

4 x

4 x

2 x

2 x

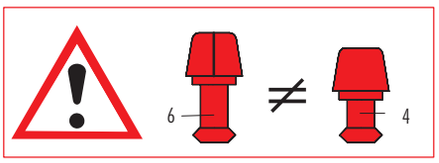

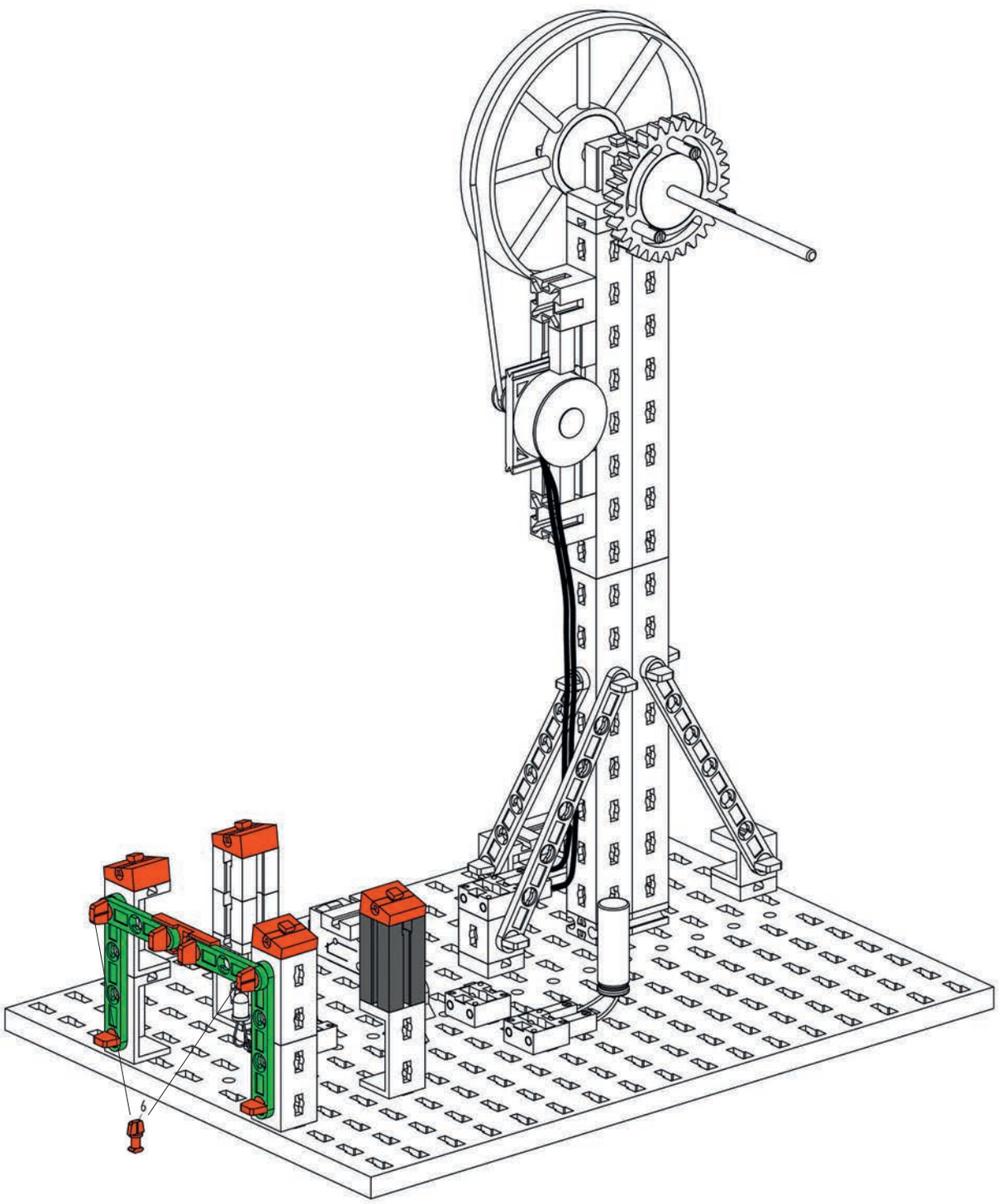

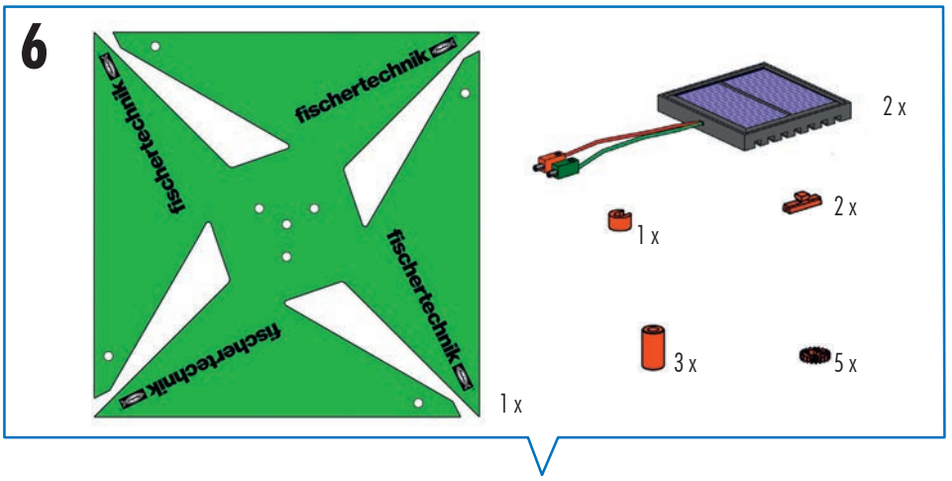
6
fischertechnik
fischertechnik
fischertechnik
fischertechnik
1 x
2 x
2 x
1 x
3 x
5 x

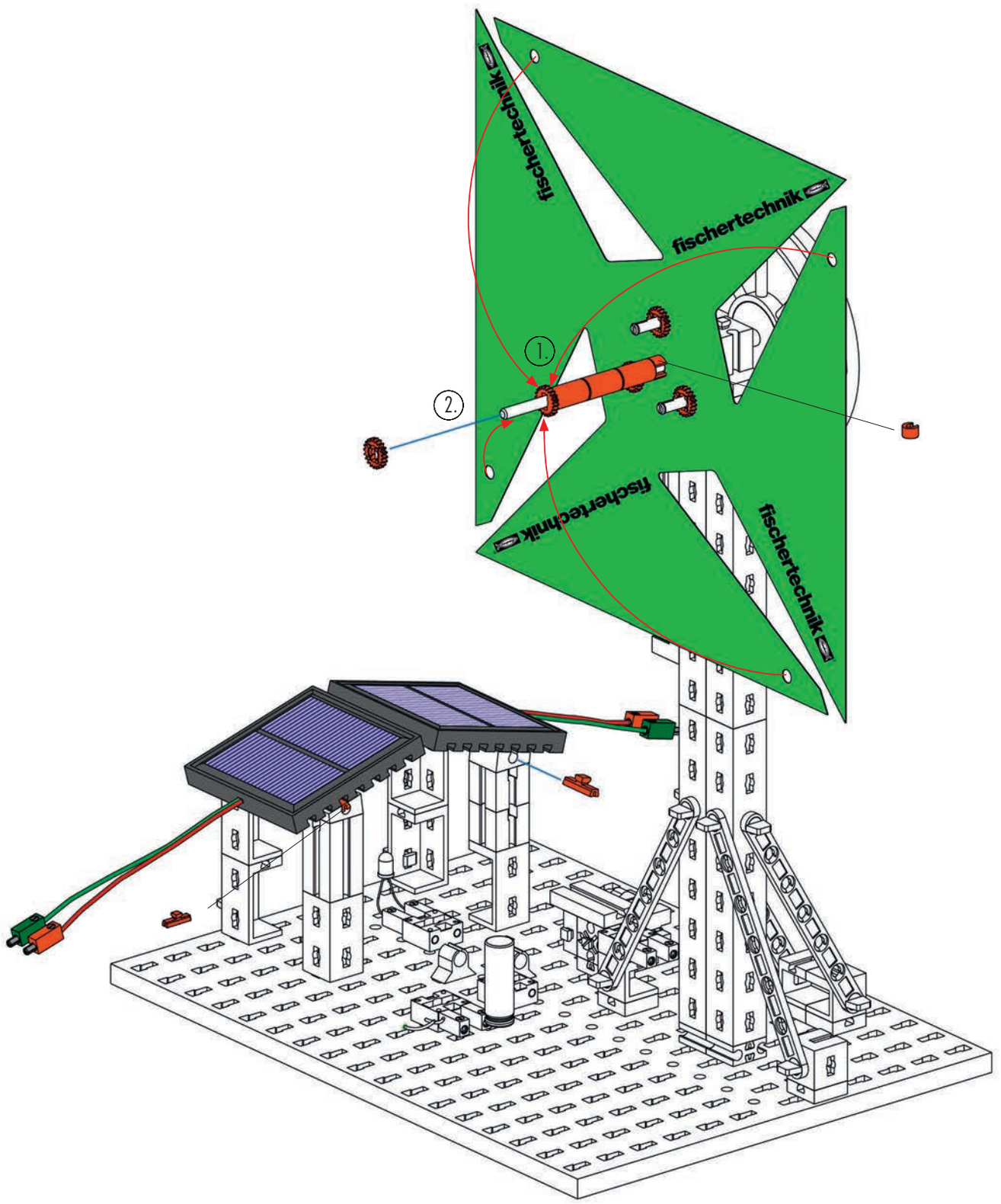
fischertechnik
fischertechnik
1.
2.
fischertechnik
fischertechnik

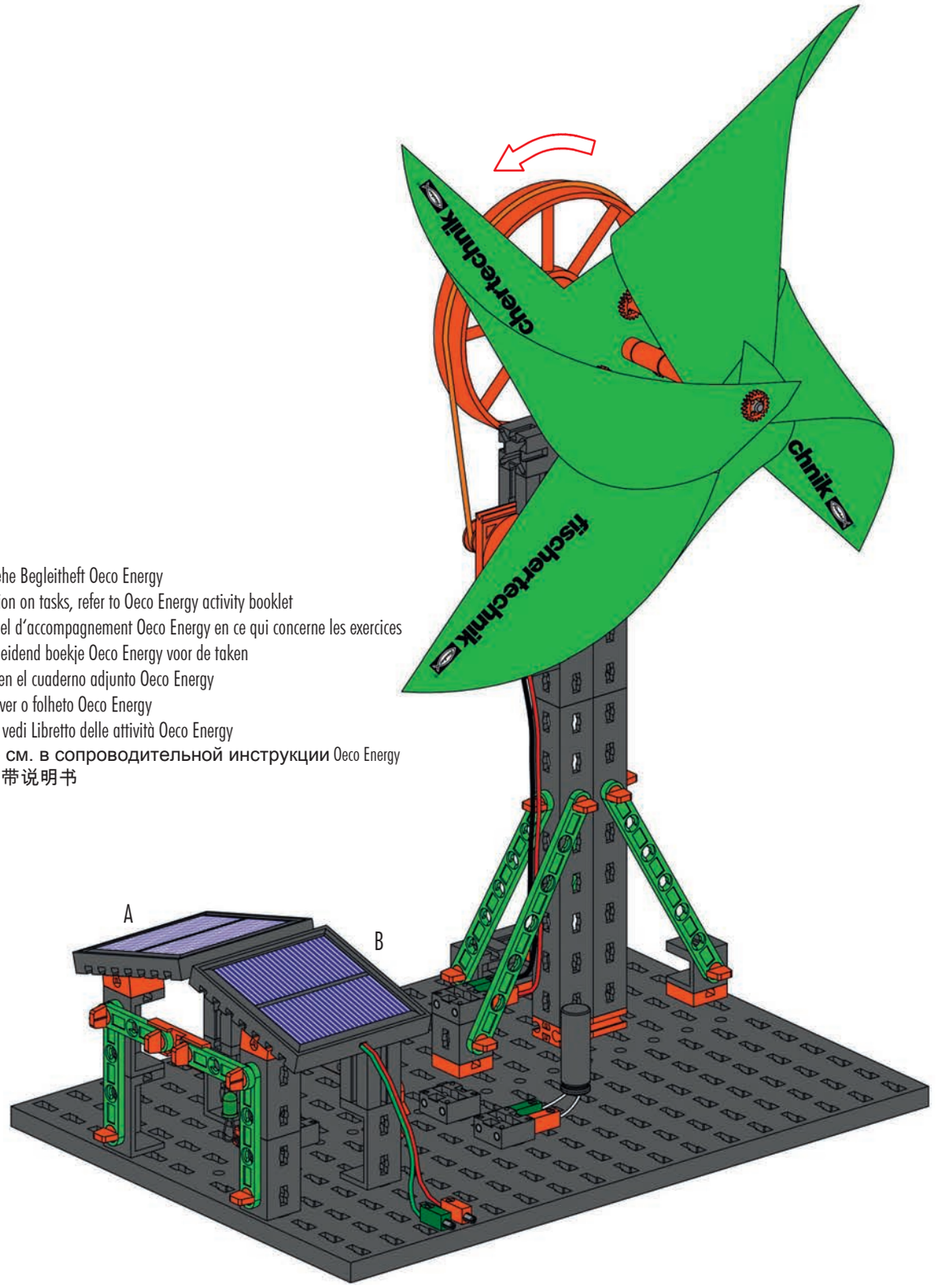

Aufgaben siehe Begleitheft Oeco Energy
For information on tasks, refer to Oeco Energy activity booklet
Voir le manuel d'accompagnement Oeco Energy en ce qui concerne les exercices
Zie het begeleidend boekje Oeco Energy voor de taken
Véase tarea en el cuaderno adjunto Oeco Energy
Para tarefas ver o folheto Oeco Energy
Per i compiti vedi Libretto delle attività Oeco Energy
Задание см. в сопроводительной инструкции Oeco Energy
任务见附带说明书

Aufgabe 1
Task 1
Exercice 1

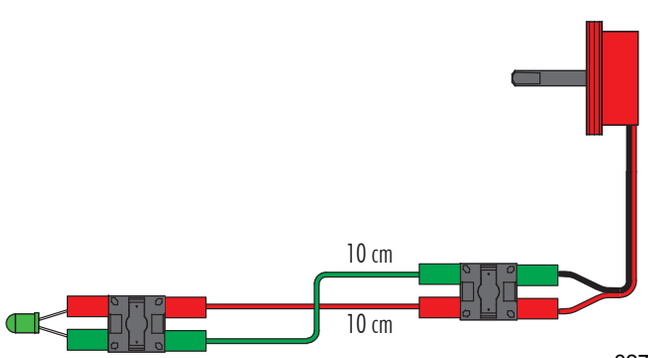

Taak 1
Tarea 1
Tarefa 1

Compito 1
Задание **1**
任务 **1**

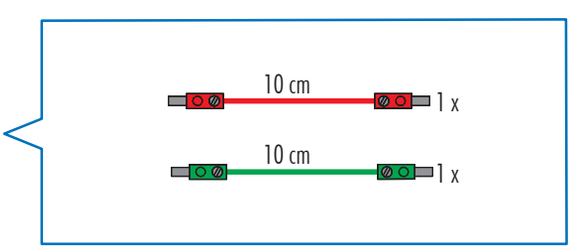

Aufgabe 2
Task 2
Exercice 2

Taak 2
Tarea 2
Tarefa 2

Compito 2
Задание **2**
任务 **2**

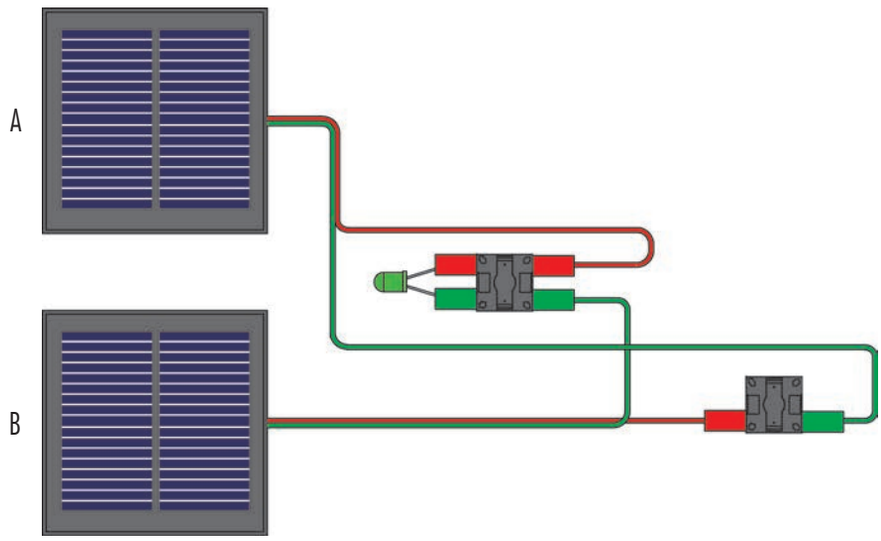

Aufgabe 3
Task 3
Exercice 3

Taak 3
Tarea 3
Tarefa 3

Compito 3
Задание **3**
任务 **3**

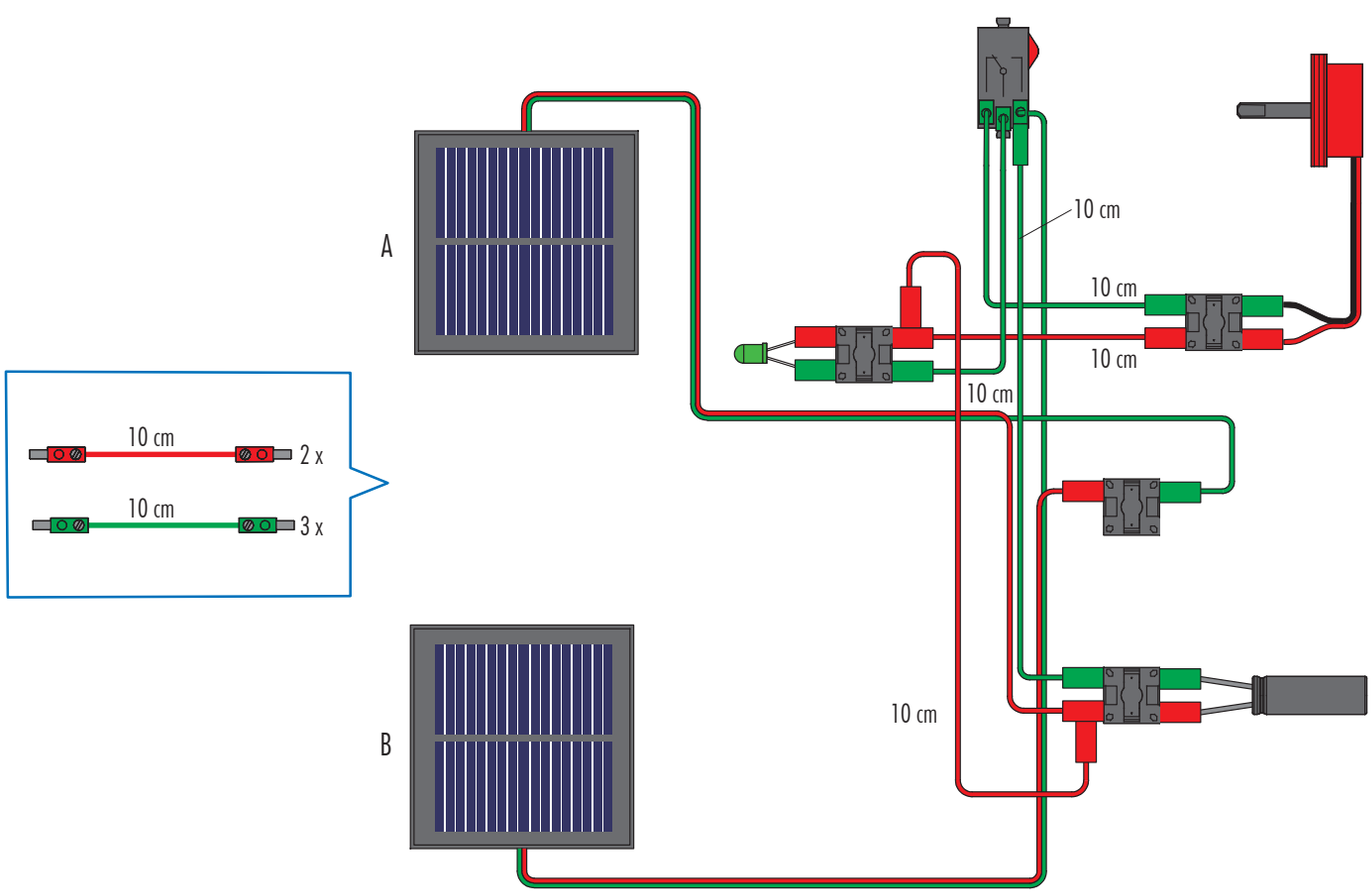

Profi Oeco Energy + Fuel Cell Kit

Fuel Cell Kit
520 401

zusätzlich erforderlich
additionally required
à commander en supplément

extra noodzakelijk
adicionalmente necesario
adicionalmente necessário

accessorio necessario
дополнительно требуется
额外需要

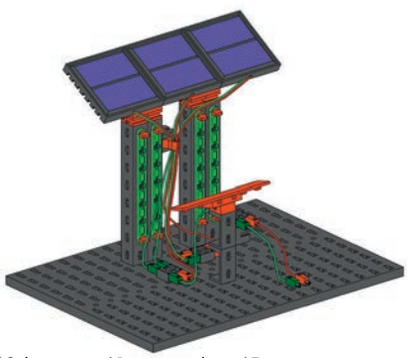

Solarstation / Solar station / Panneau solaire / Zonne-energiestation / Estación solar / Estação solar / Stazione solare / Солнечная станция / 太阳能站 78

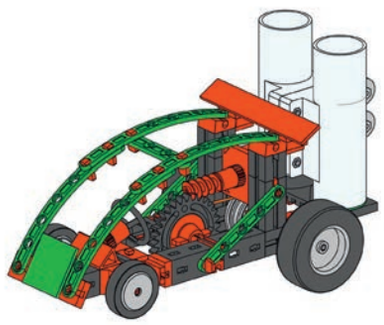

Brennstoffzellenfahrzeug / Fuel cell vehicle / Véhicule à cellule électrochimique / Voertuig met brandstofcellen / Vehículo de células de combustible / Veículo de célula a combustível / Veicolo a celle di carburante / Электромобиль с топливным элементом / 燃料电池车 81

Solarfahrzeug mit 3 Solarmodulen / Solar vehicle with 3 solar modules / Véhicule solaire avec trois modules solaires / Voertuig op zonne-energie met 3 zonne-energiemodules / Vehículo solar con 3 módulos solares / Veículo solar com 3 módulos solares / Veicolo ad energia solare con 3 moduli solari / Электромобиль с 3 солнечными модулями / 配备 3 快太阳能模板太阳能电动车 85

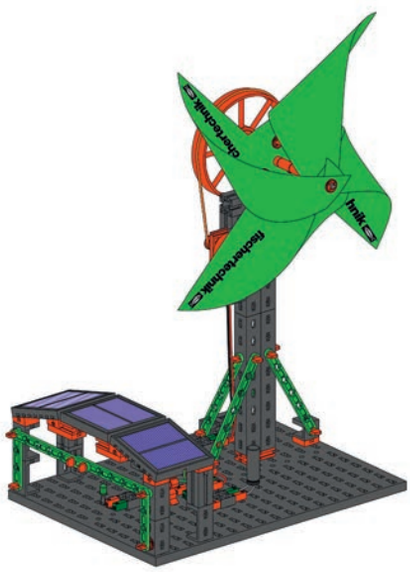

Erweitertes Ökohaus / Enhanced eco-house / Maison écologique élargie / Uitgebreid ecologisch huis / Casa ecológica ampliada / Casa ecológica ampliada / Eco casa ampliata / Расширенный „экологичный дом“ / 展的生态房屋 88

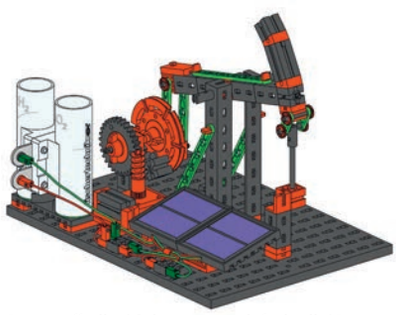

Solarpumpe mit Brennstoffzelle / Solar pump with fuel cell / Pompe solaire à cellule électrochimique/ Zonne-energiepomp met brandstofcel / Bomba solar con célula de combustible / Bomba solar com célula a combustível / Pompa solare con cella di carburante / Солнечный насос с топливным элементом / 配备燃料电池的太阳能泵 95

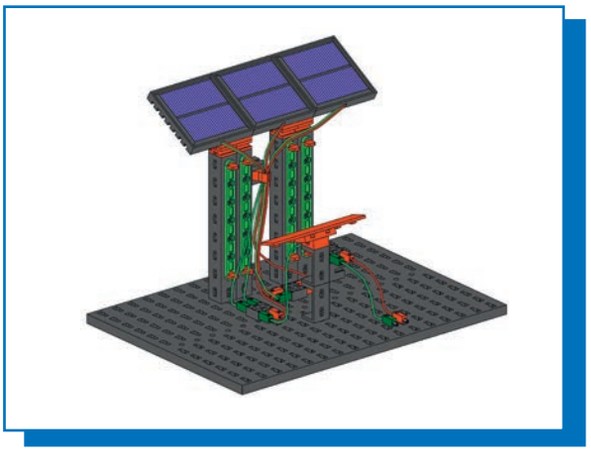

Solarstation **Zonne-energiestation** **Stazione solare**
Solar station **Estación solar** Солнечная станция
Panneau solaire **Estação solar** 太阳能站

1

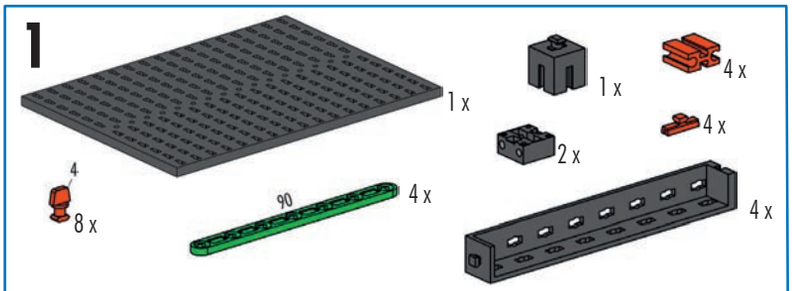

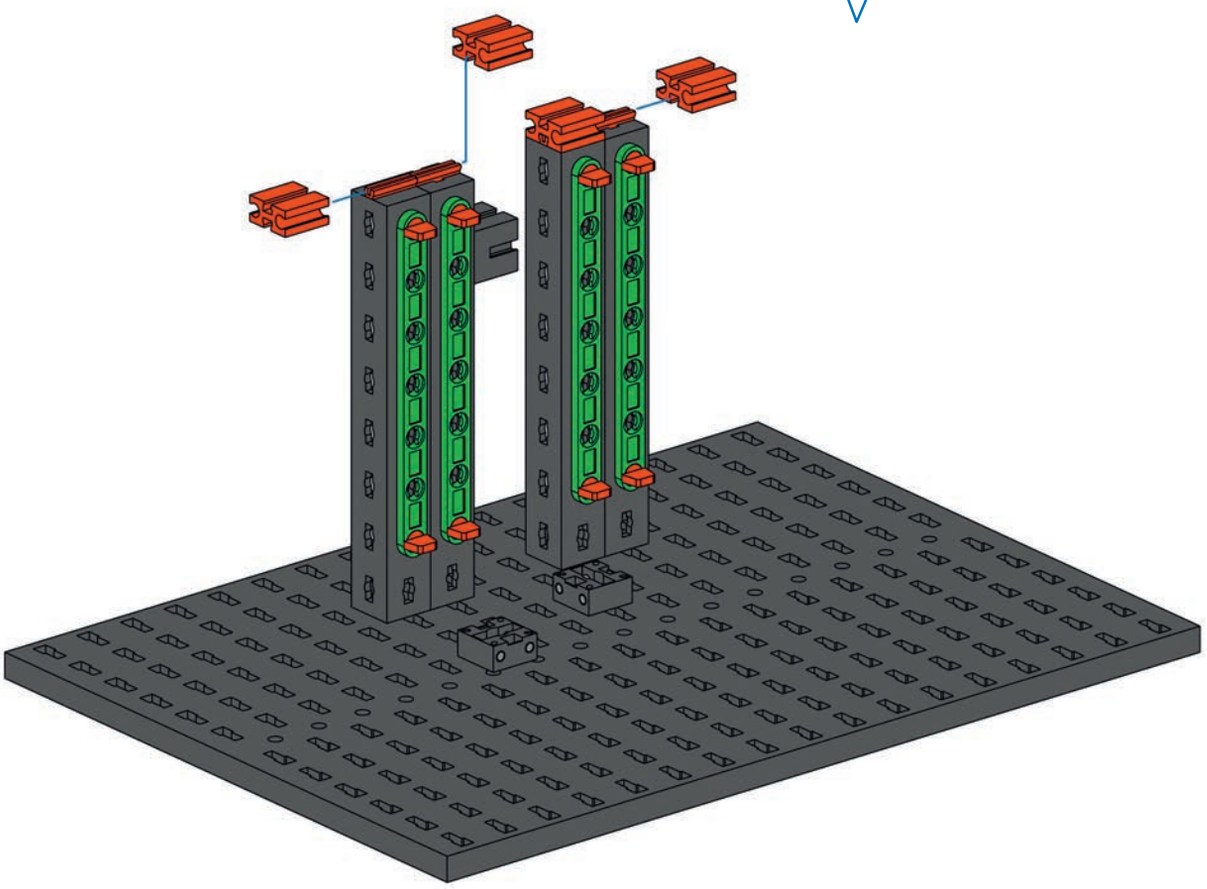

2

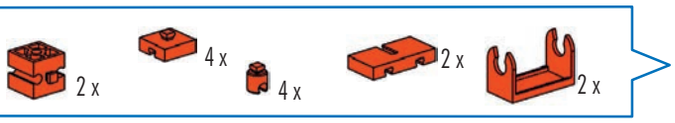

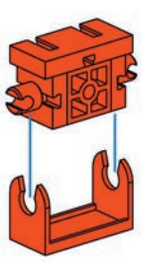

2 x

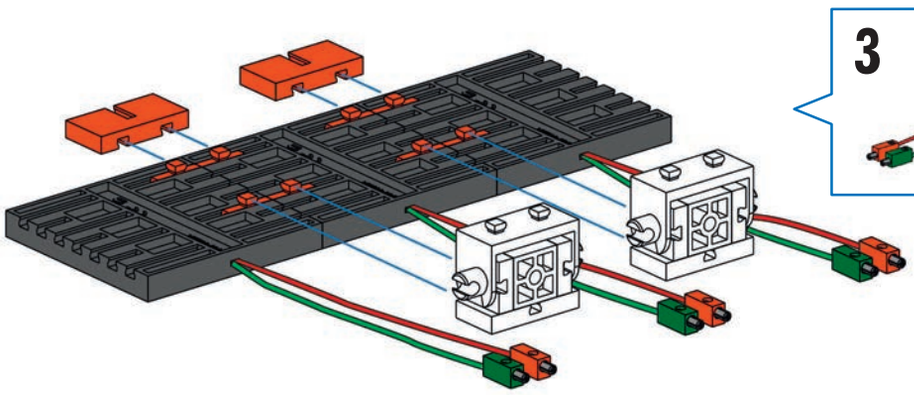

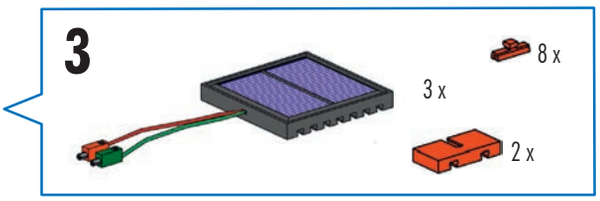
3
8 x
3 x
2 x

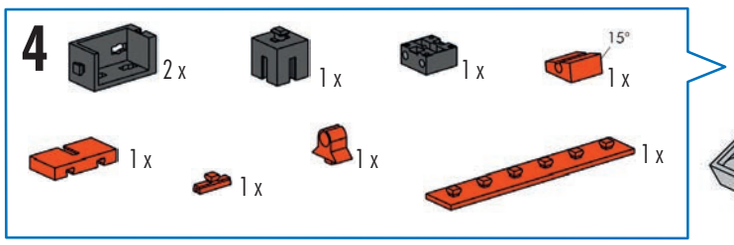
4
2 x
1 x
1 x
15°
1 x
1 x
1 x
1 x

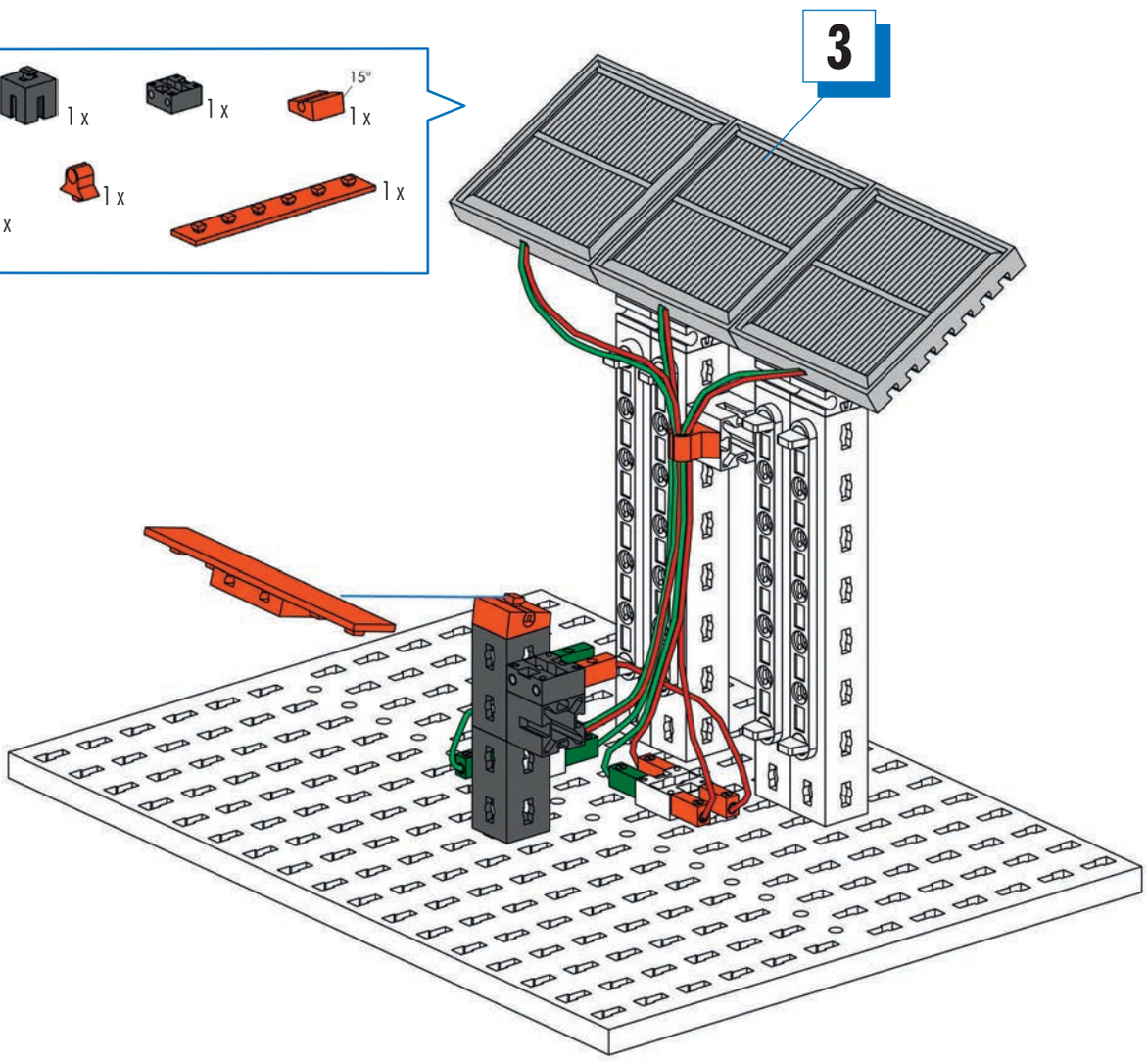
3

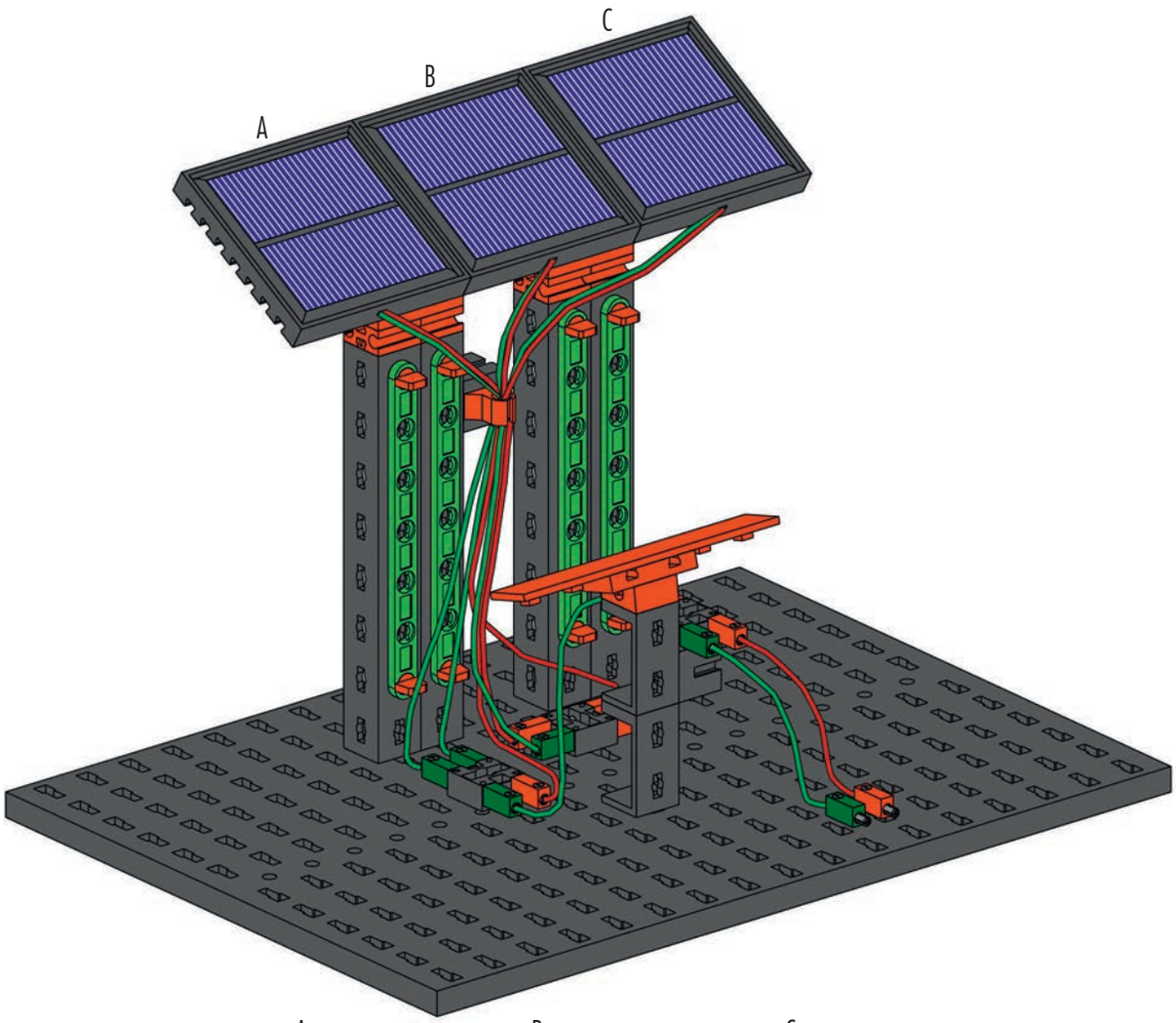
C
B
A

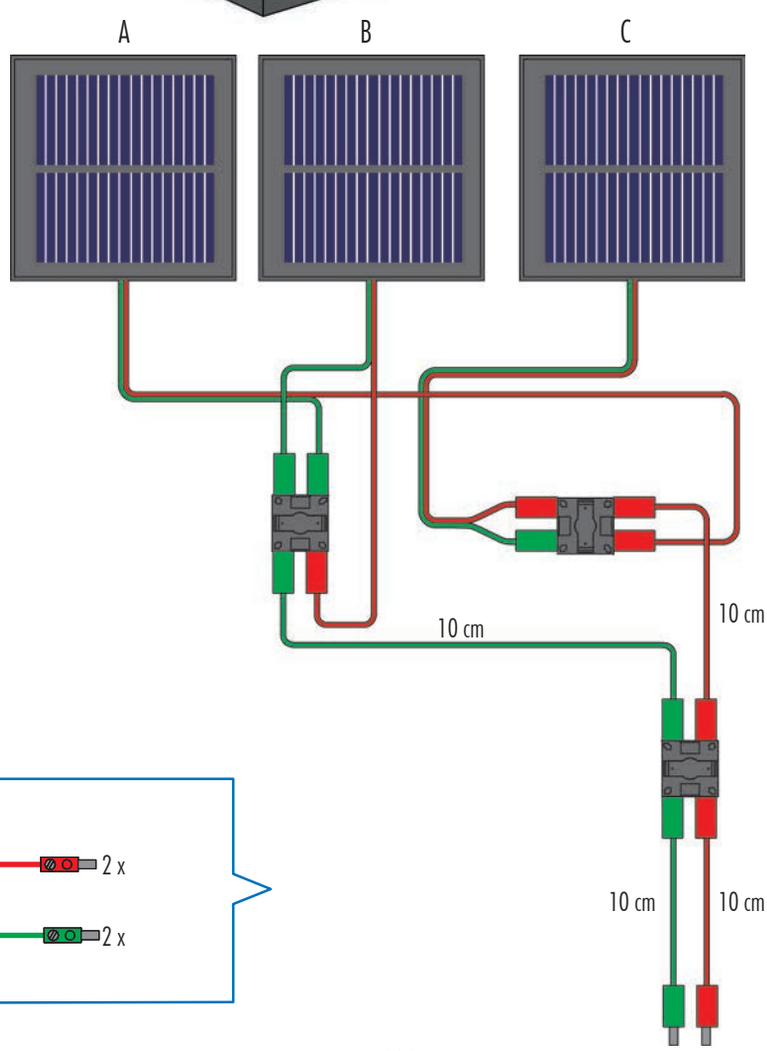
A
B
C
10 cm
10 cm
10 cm
10 cm

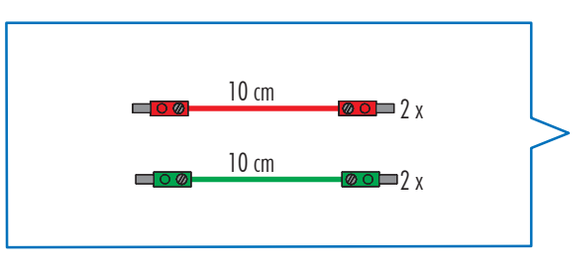
10 cm
2 x
10 cm
2 x

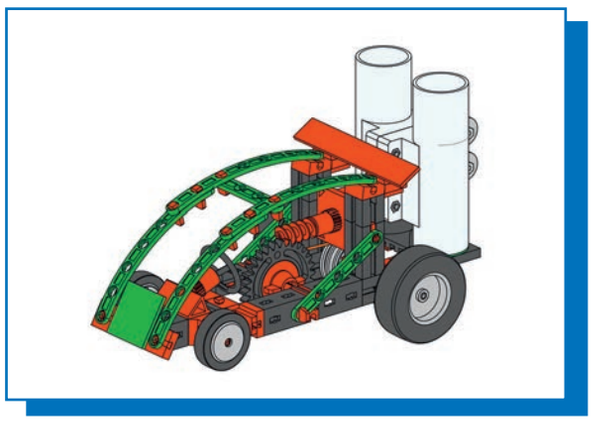

Brennstoffzellenfahrzeug
Fuel cell vehicle
Véhicule à cellule électrochimique
Voertuig met brandstofcellen
Vehículo de células de combustible
Veículo de célula a combustível
Veicolo a celle di carburante
Электромобиль с топливным элементом
燃料电池车

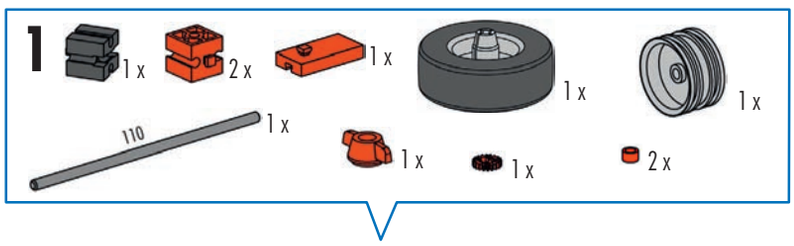

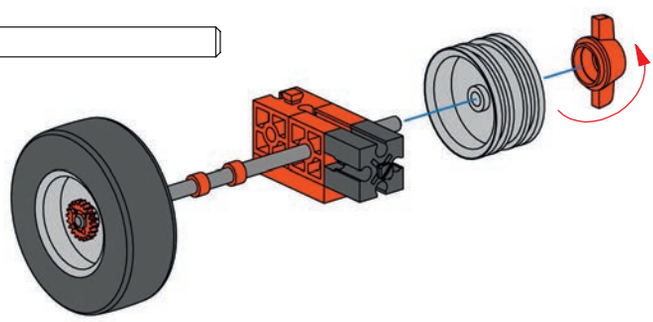

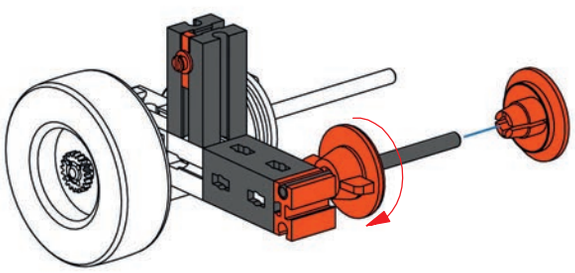

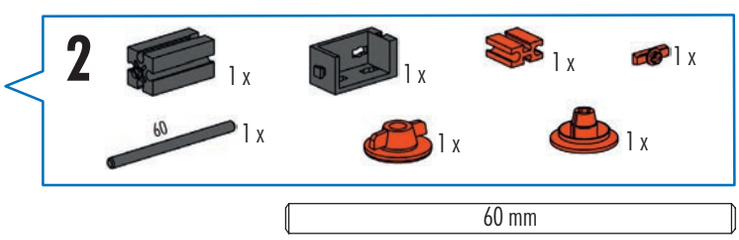

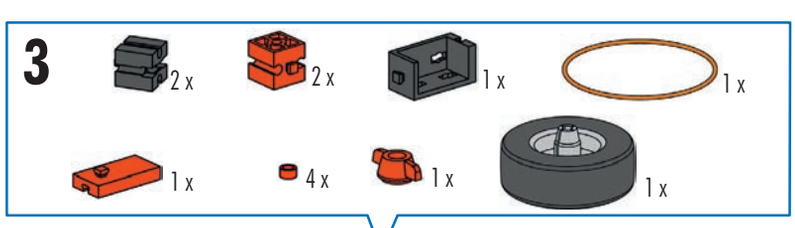

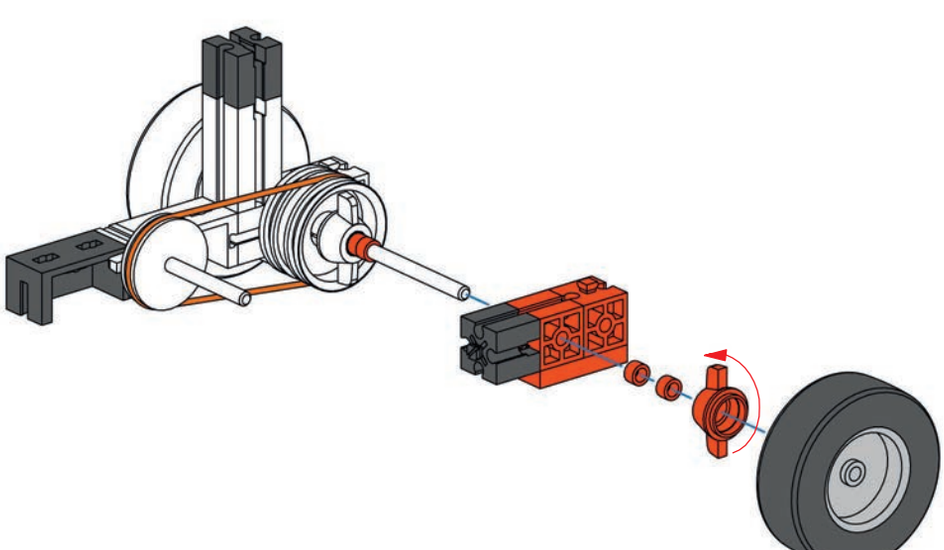

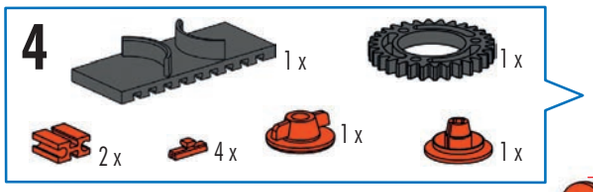
4
1 x
1 x
2 x
4 x
1 x
1 x

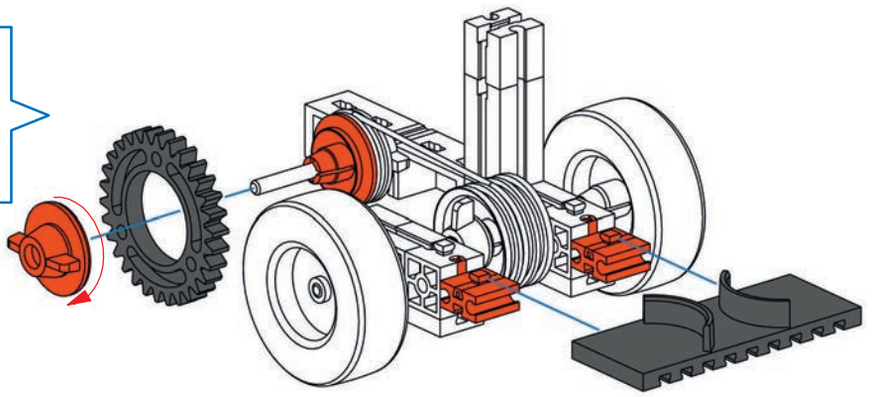

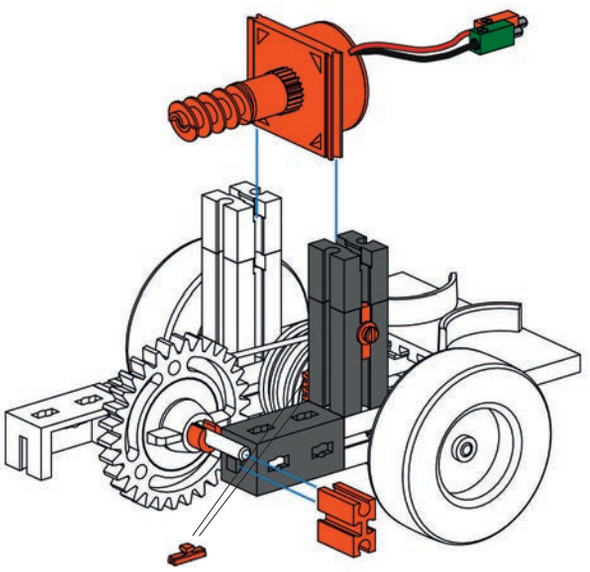

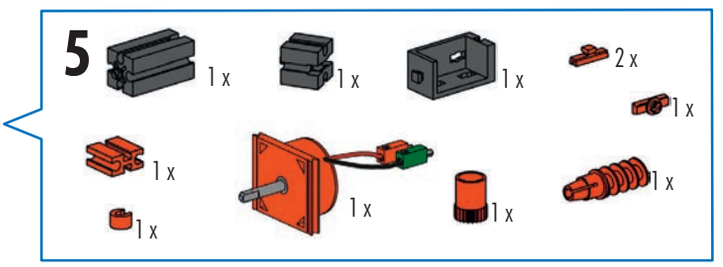
5
1 x
1 x
1 x
2 x
1 x
1 x
1 x
1 x
1 x
1 x

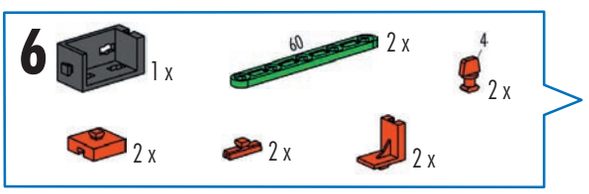
6
1 x
60
2 x
4
2 x
2 x
2 x
2 x

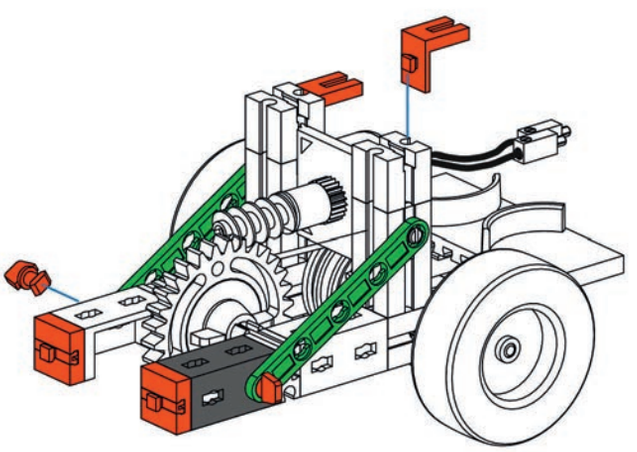

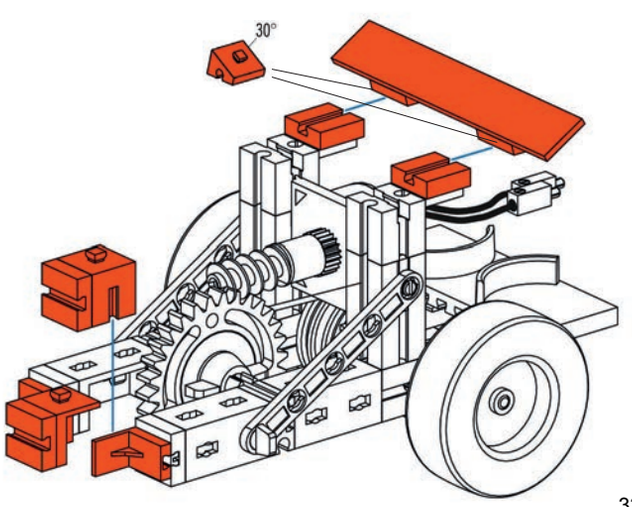
30°

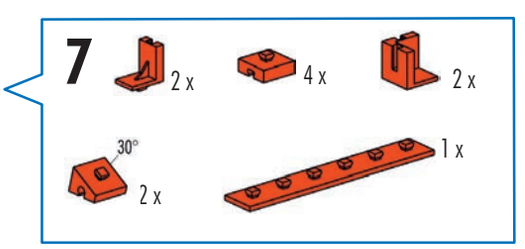
7
2 x
4 x
2 x
30°
2 x
1 x

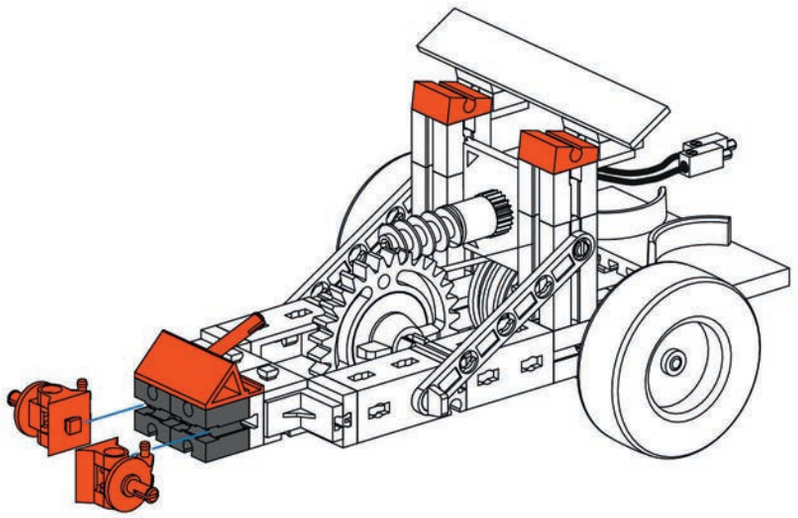

8

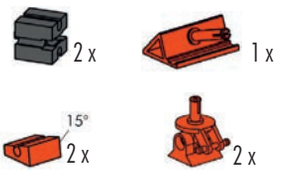

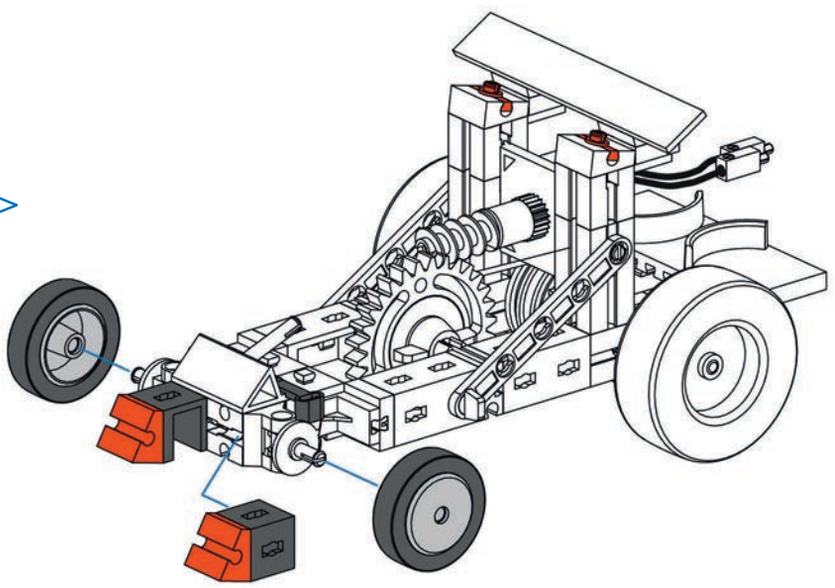

9

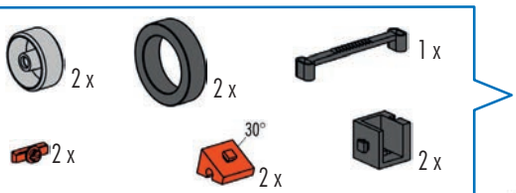

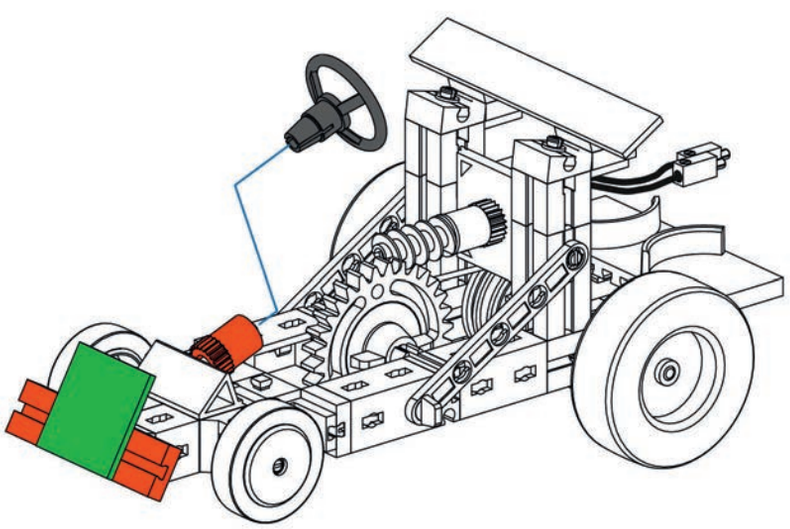

10

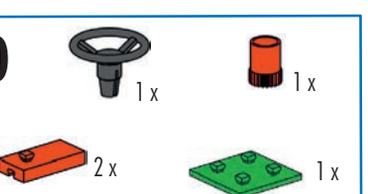

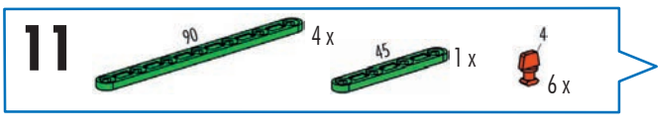
11
90
4 x
45
1 x
4
6 x

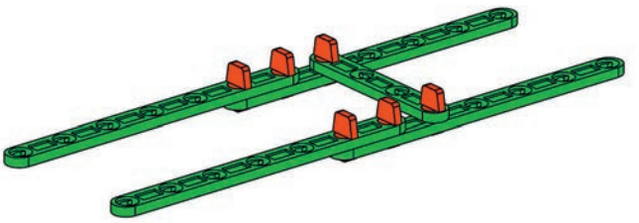

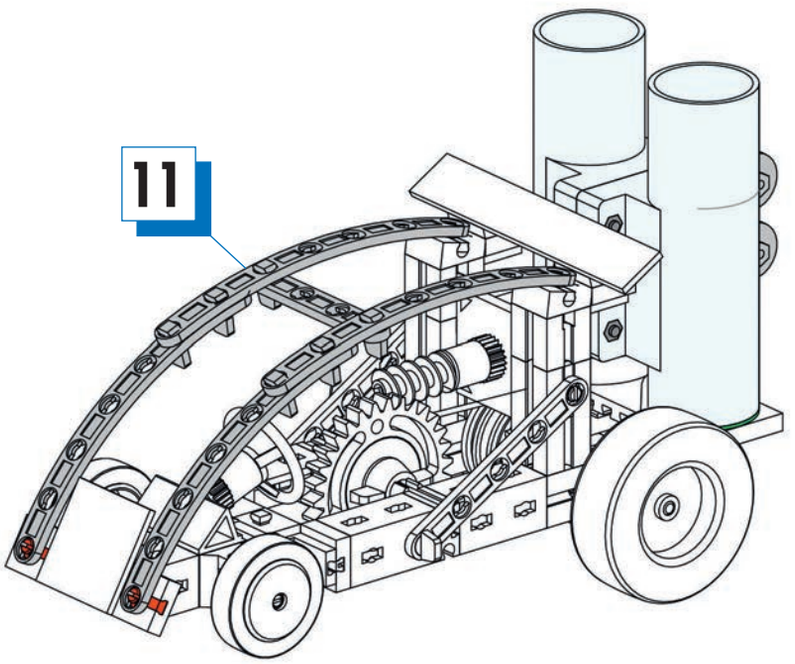
11

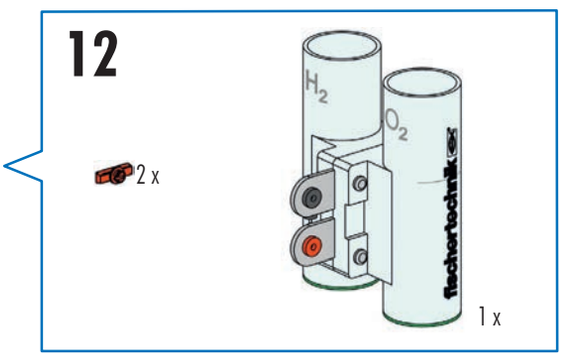
12
2 x
H2
O2
fischertechnik
1 x

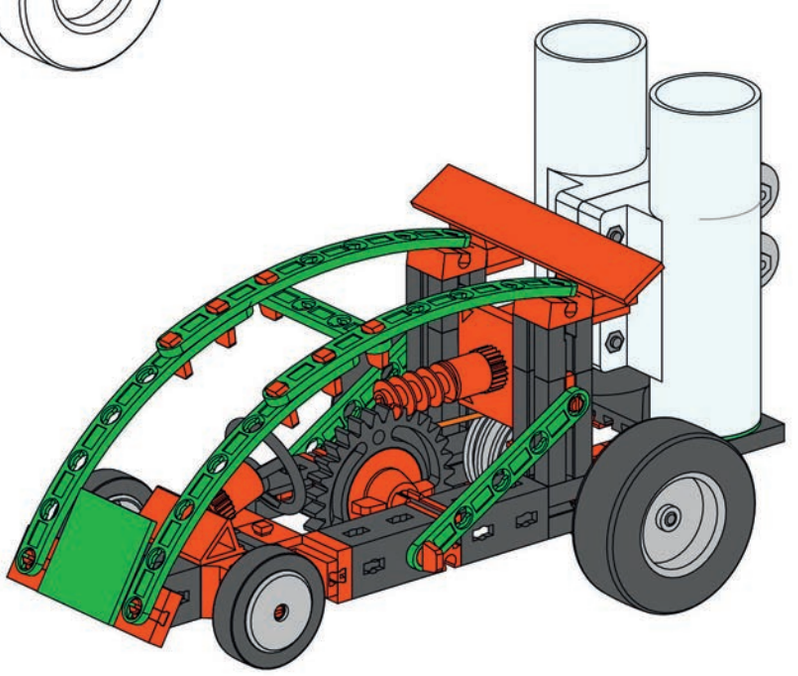

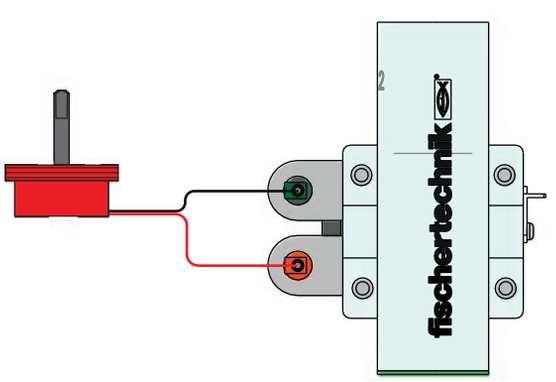
2
fischertechnik

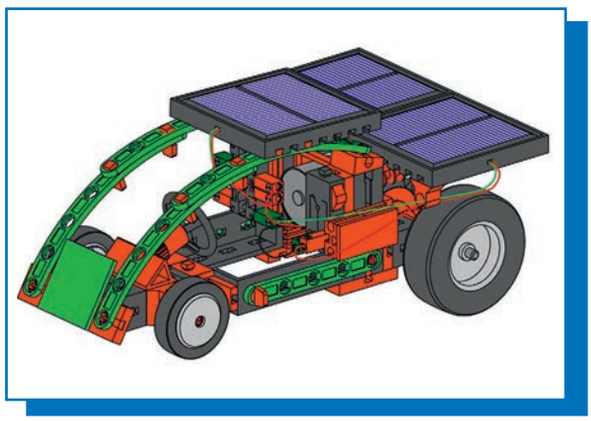

Solarfahrzeug mit 3 Solarmodulen
Solar vehicle with 3 solar modules
Véhicule solaire avec trois modules solaires
Voertuig op zonne-energie met 3 zonne-energiemodules
Vehículo solar con 3 módulos solares
Veículo solar com 3 módulos solares
Veicolo ad energia solare con 3 moduli solari
Электромобиль с 3 солнечными модулями
配备 3 快太阳能模板太阳能电动车

1-6

Seite	46
Page	46
Page	46
Bladzijde	46
Página	46
Pagina	46
Pagina	46
Страница	46
页次	46

7

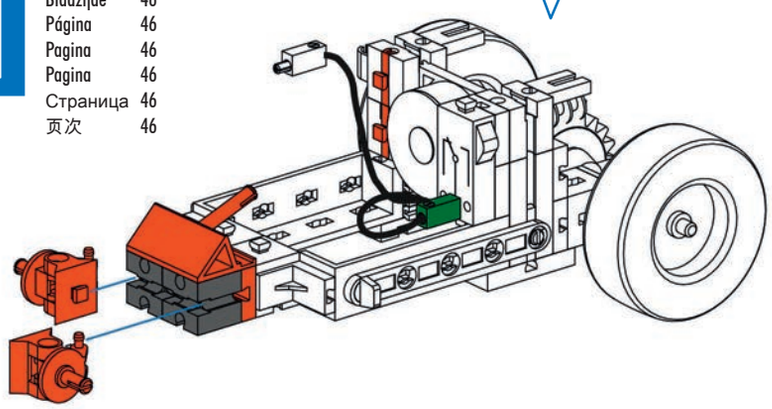

8

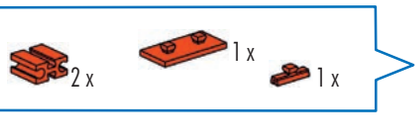

8

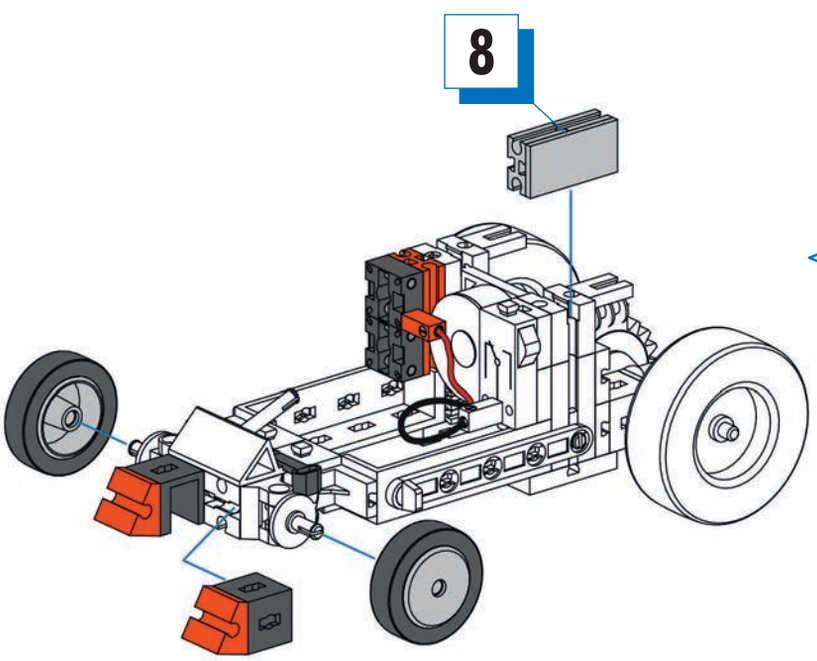

9

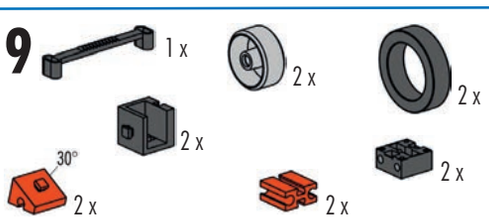

10

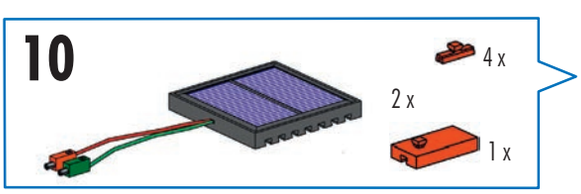

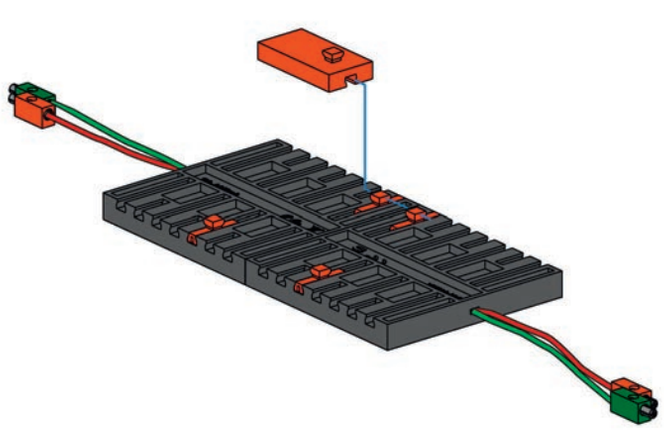

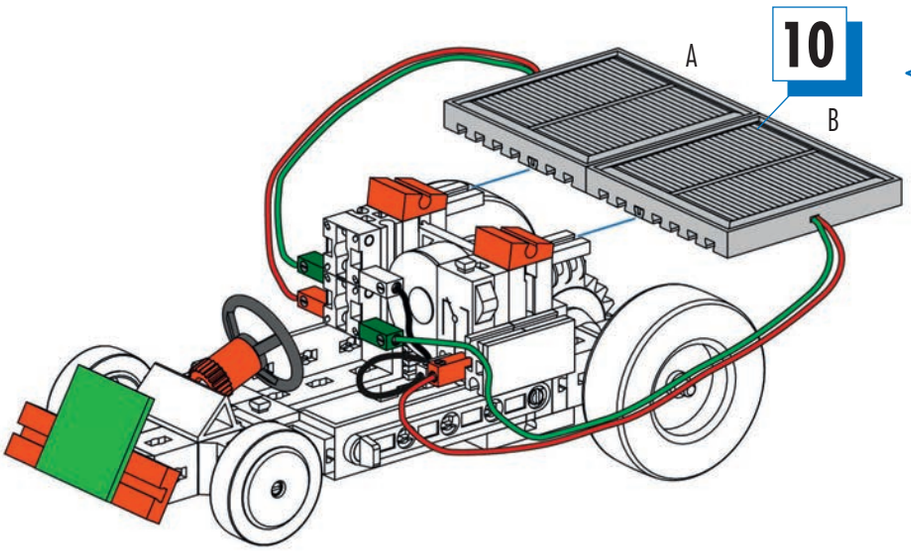
A
10
B

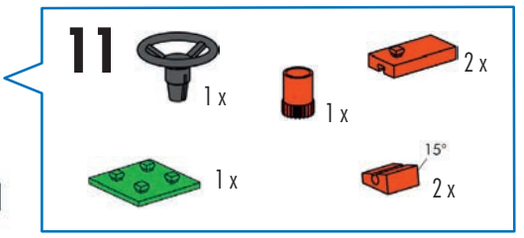
11
1 x
1 x
2 x
1 x
15°
2 x

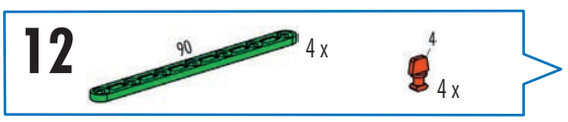
12
90
4 x
4
4 x

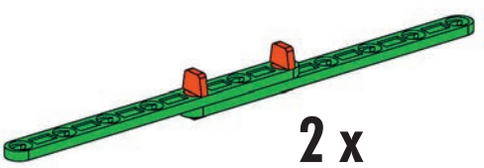
2 x

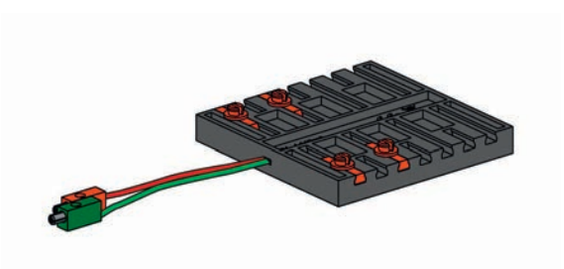

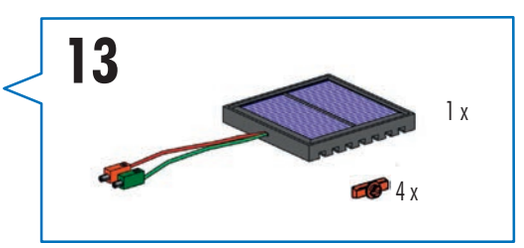
13
1 x
4 x

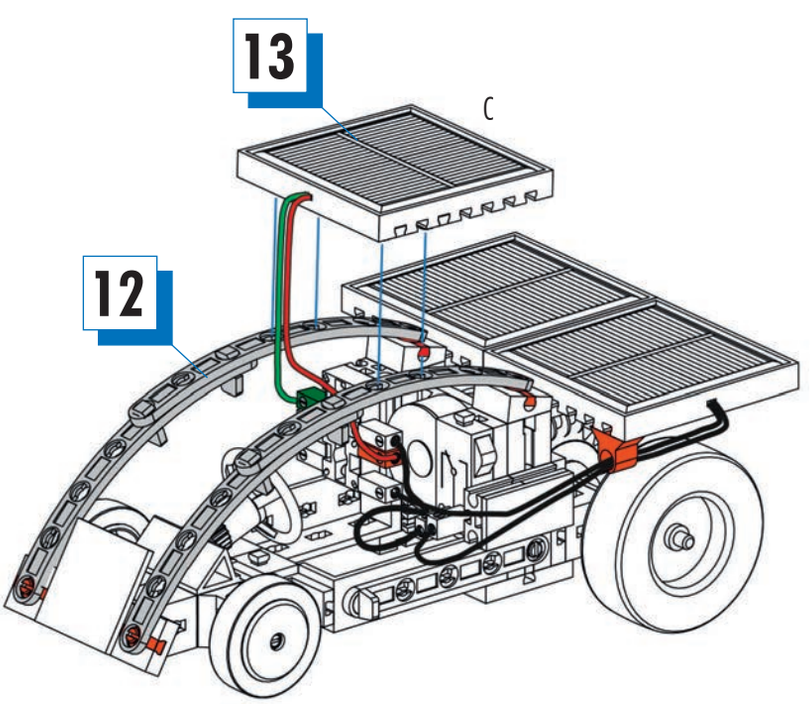
13
C
12

14
4 x
1 x

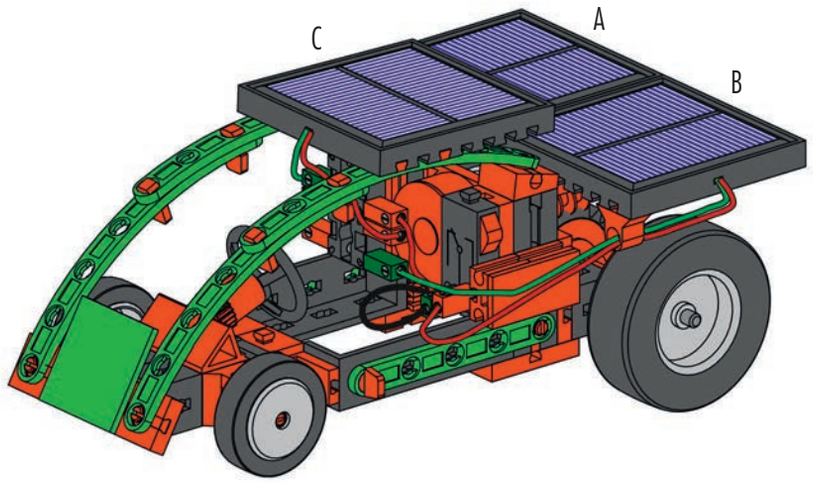
C
A
B

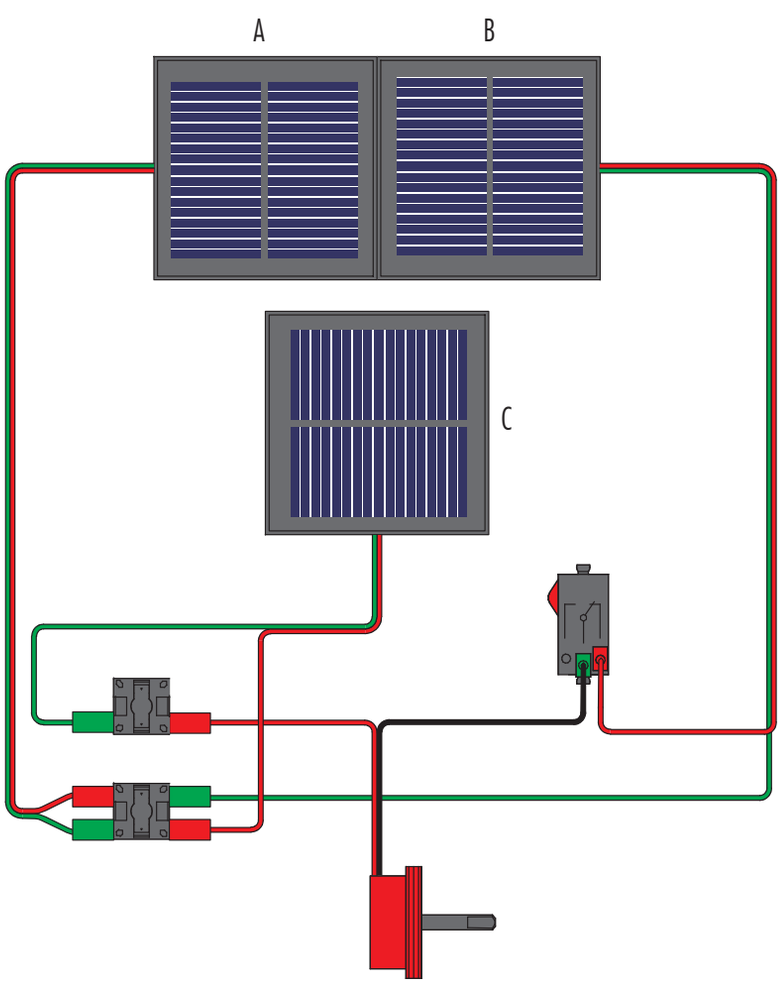
A
B
C

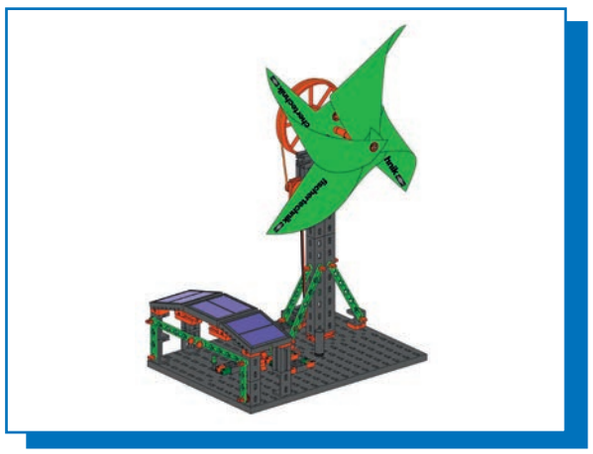

Erweitertes Ökohaus
Enhanced eco-house
Maison écologique élargie
Uitgebreid ecologisch huis
Eco casa ampliata
Casa ecológica ampliada
Casa ecológica ampliada
Расширенный „экологичный дом“
扩展的生态房屋

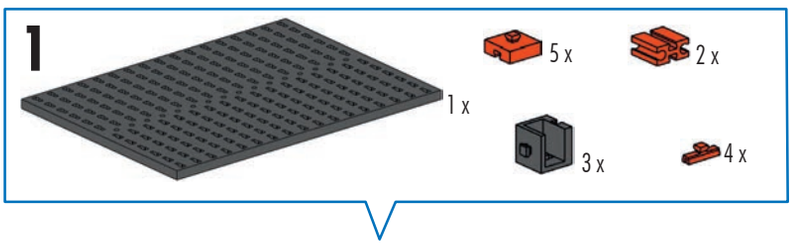

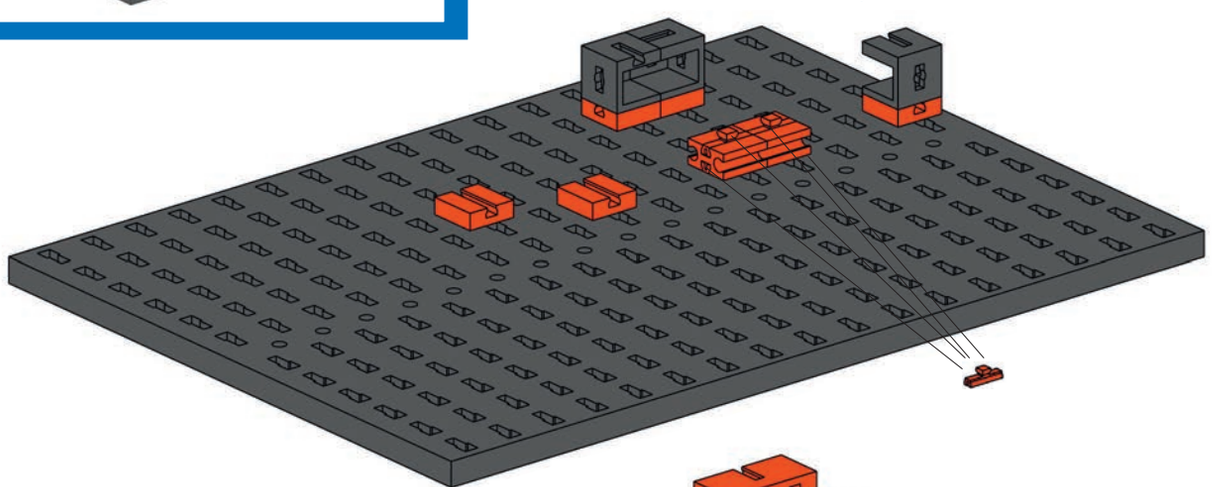

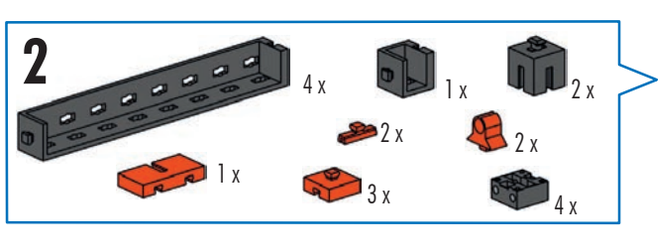

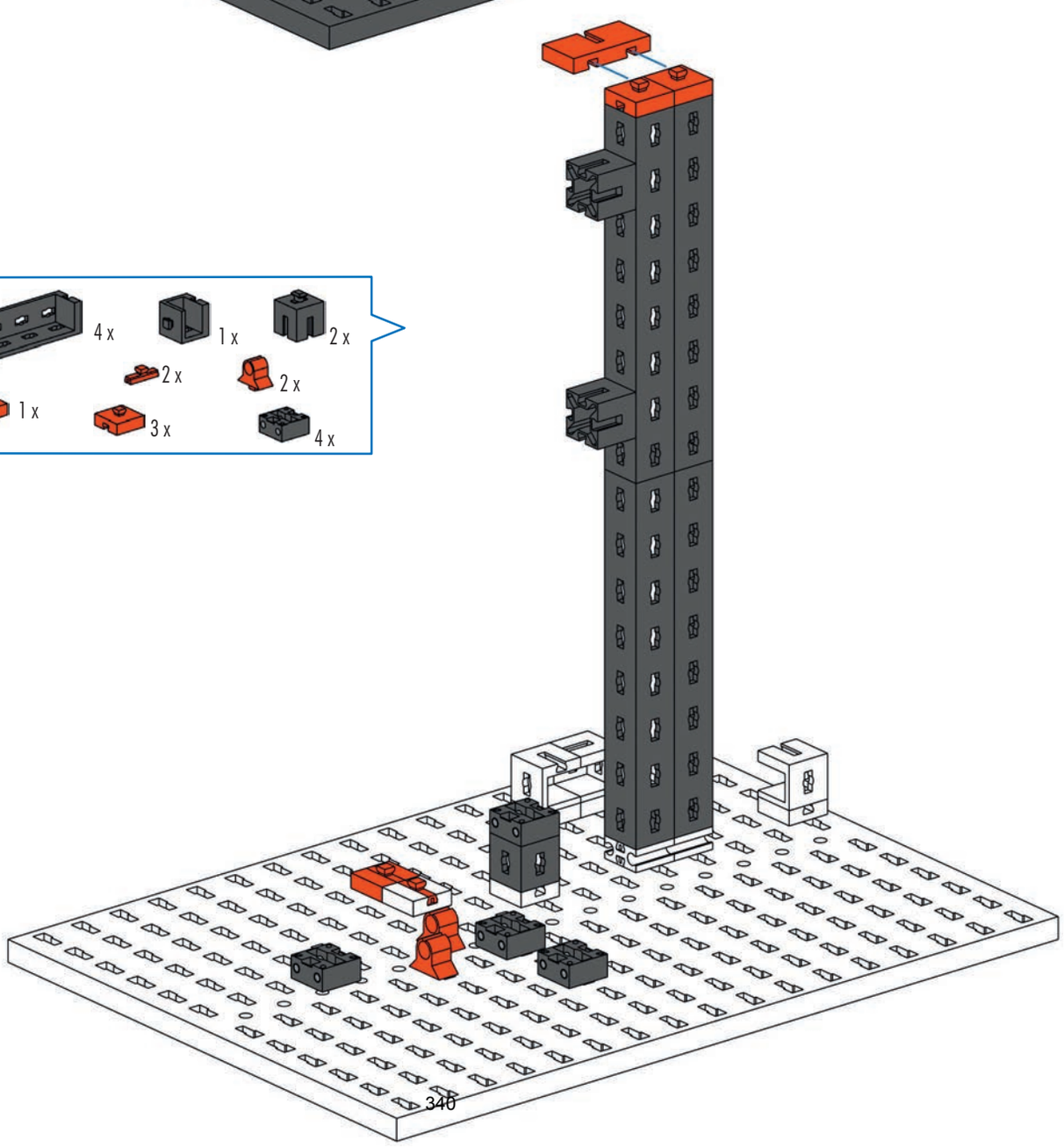

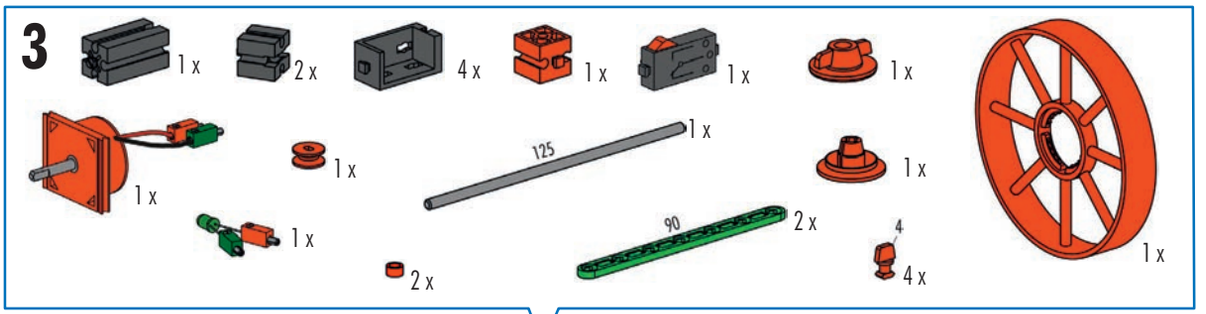

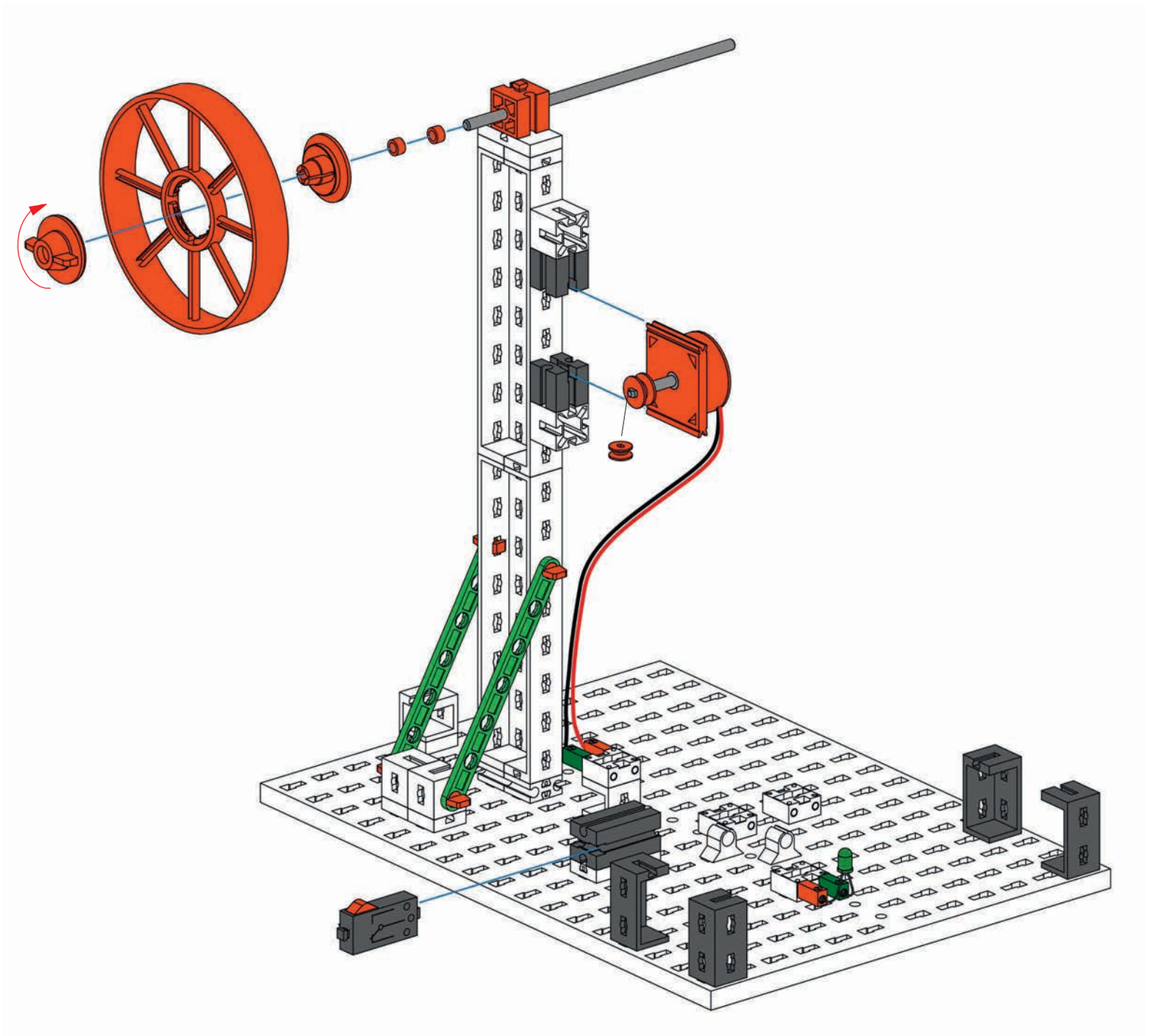

125 mm

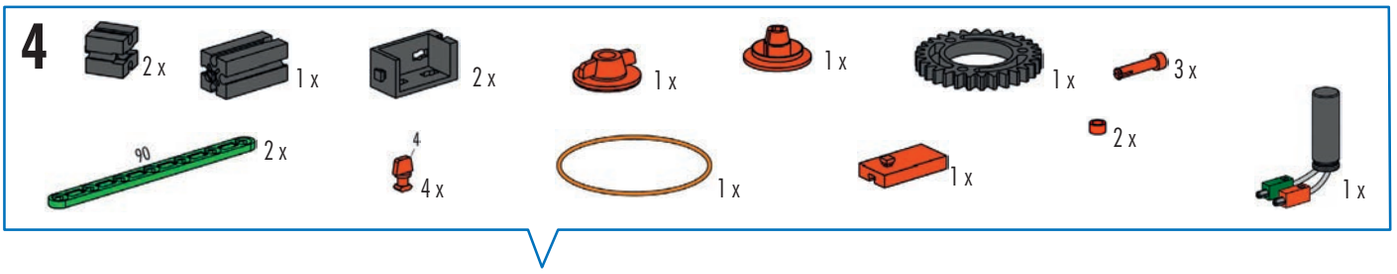

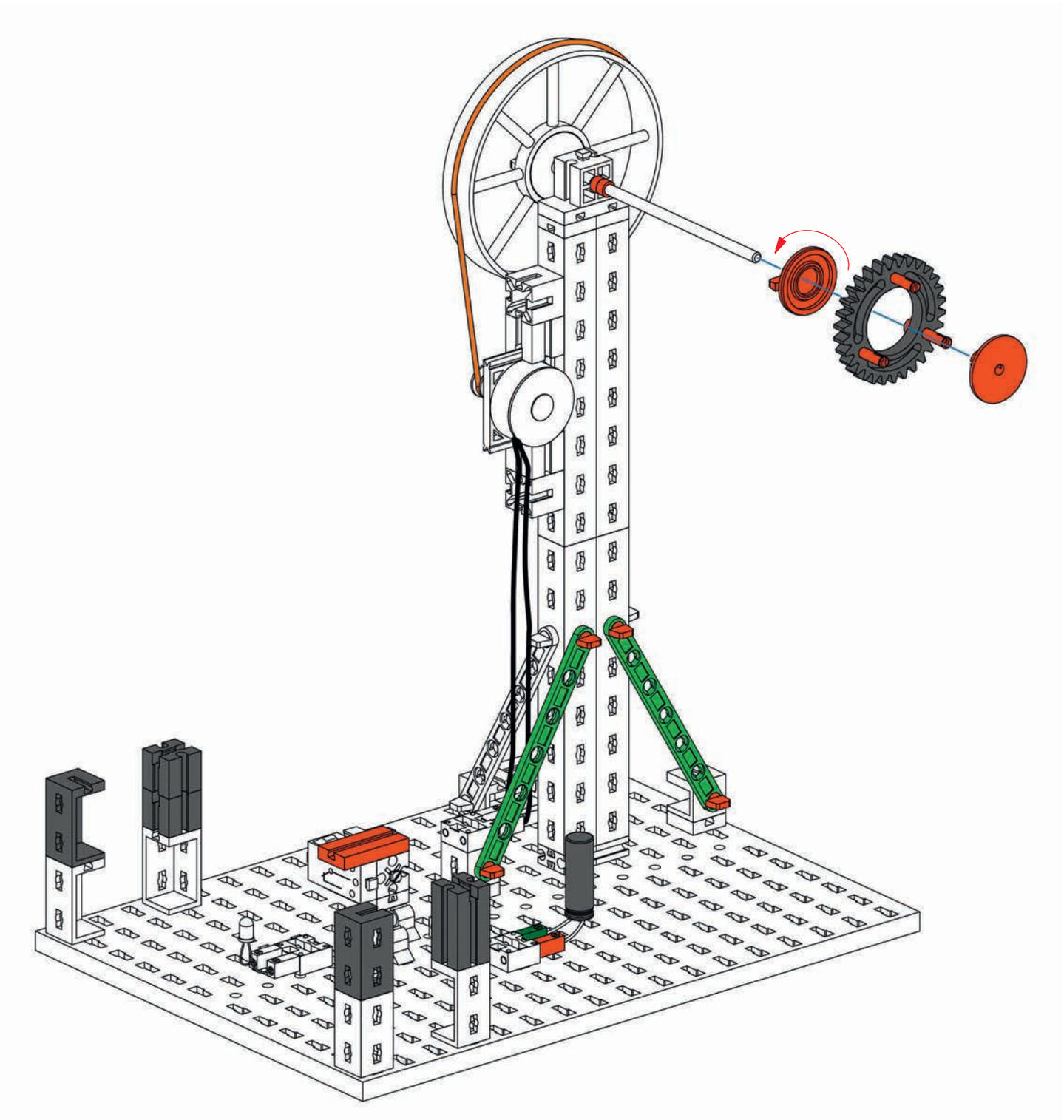

90

5
45
2 x
90
2 x
15°
4 x
4
3 x
6
3 x
2 x
1 x

6
≠
4

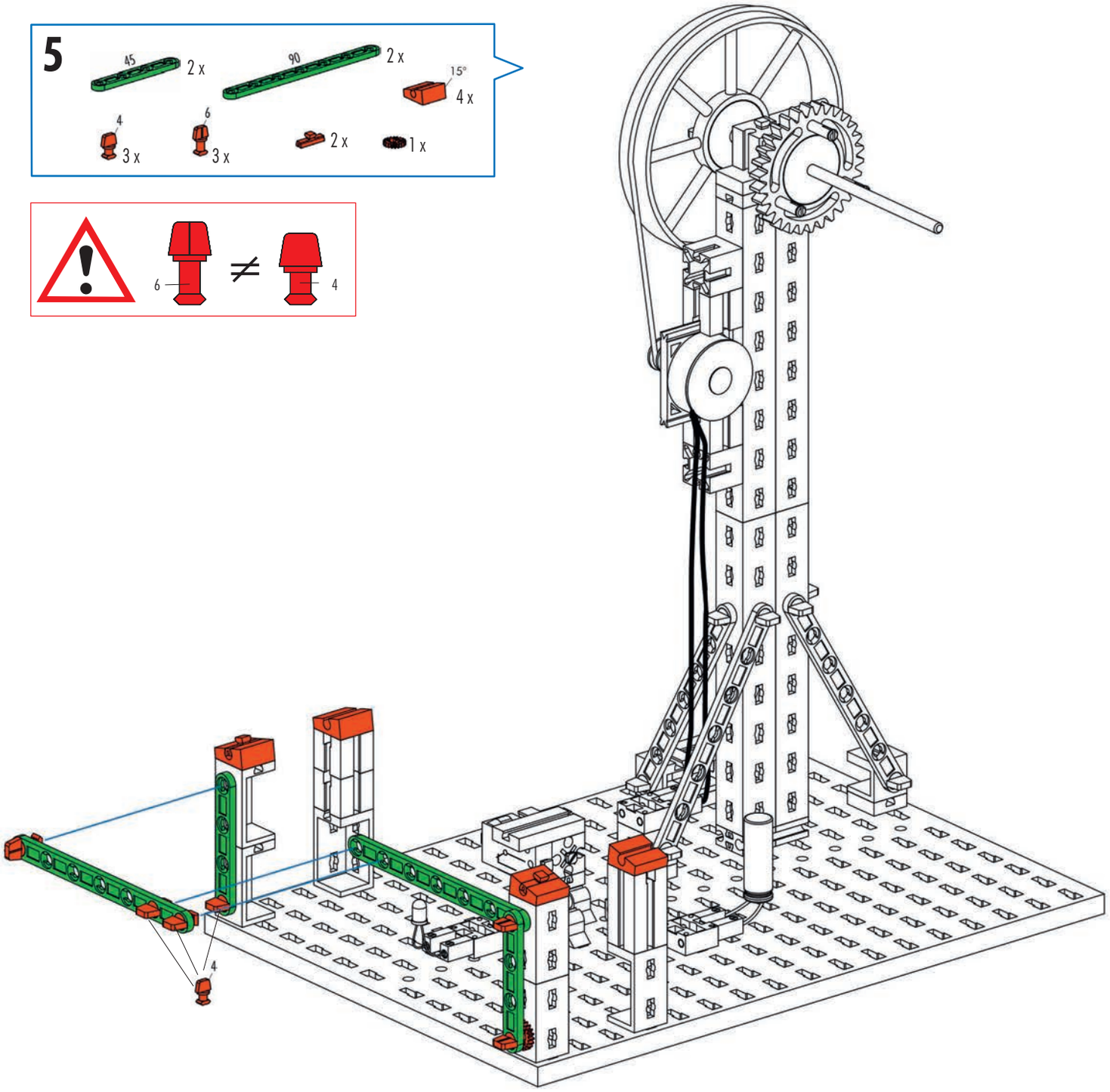
4

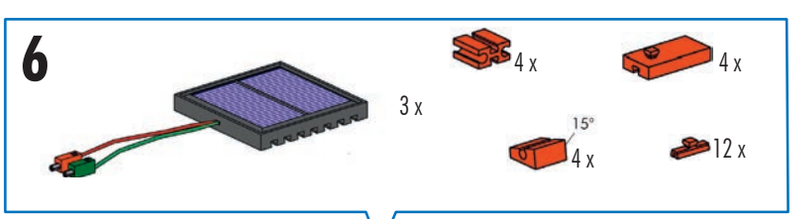
6
4 x
4 x
3 x
15°
4 x
12 x

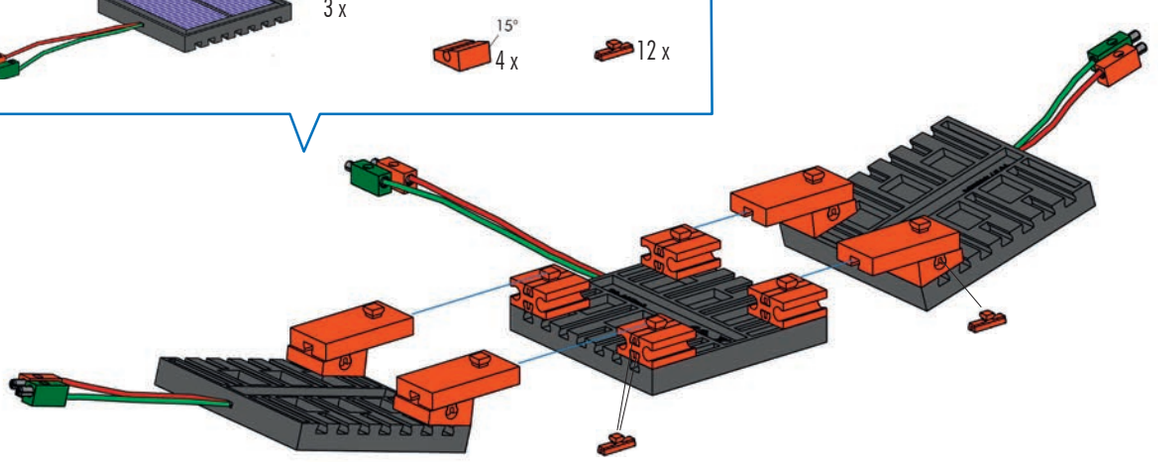

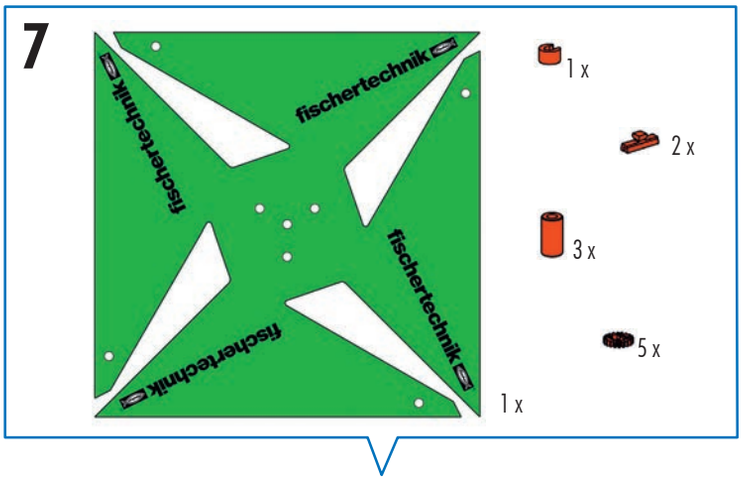
7
fischertechnik
1 x
2 x
3 x
5 x
1 x

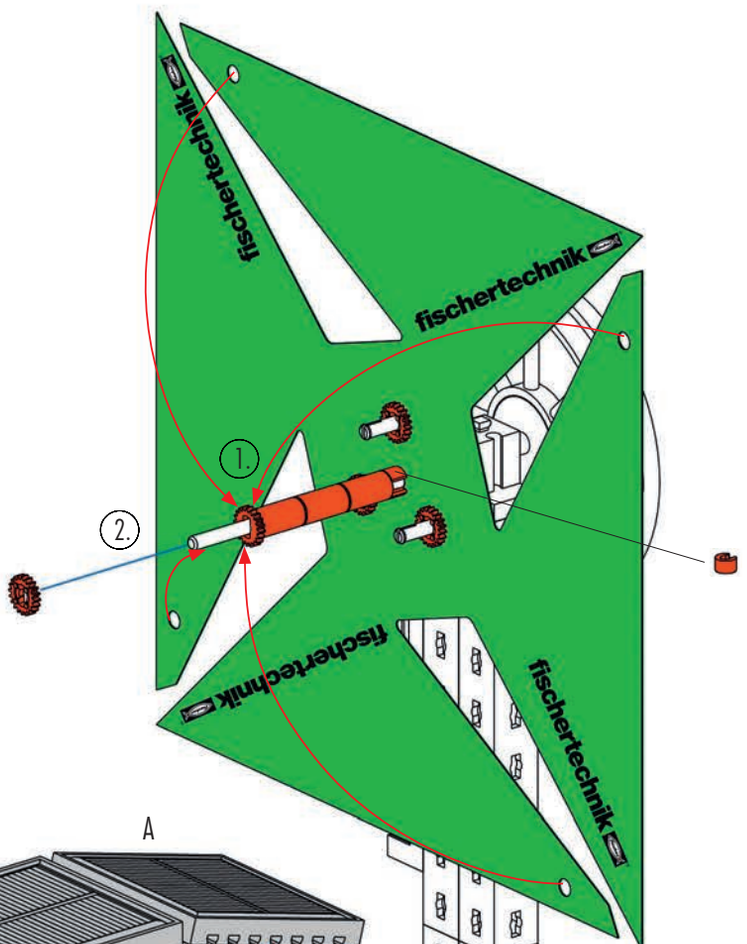
fischertechnik
1.
2.

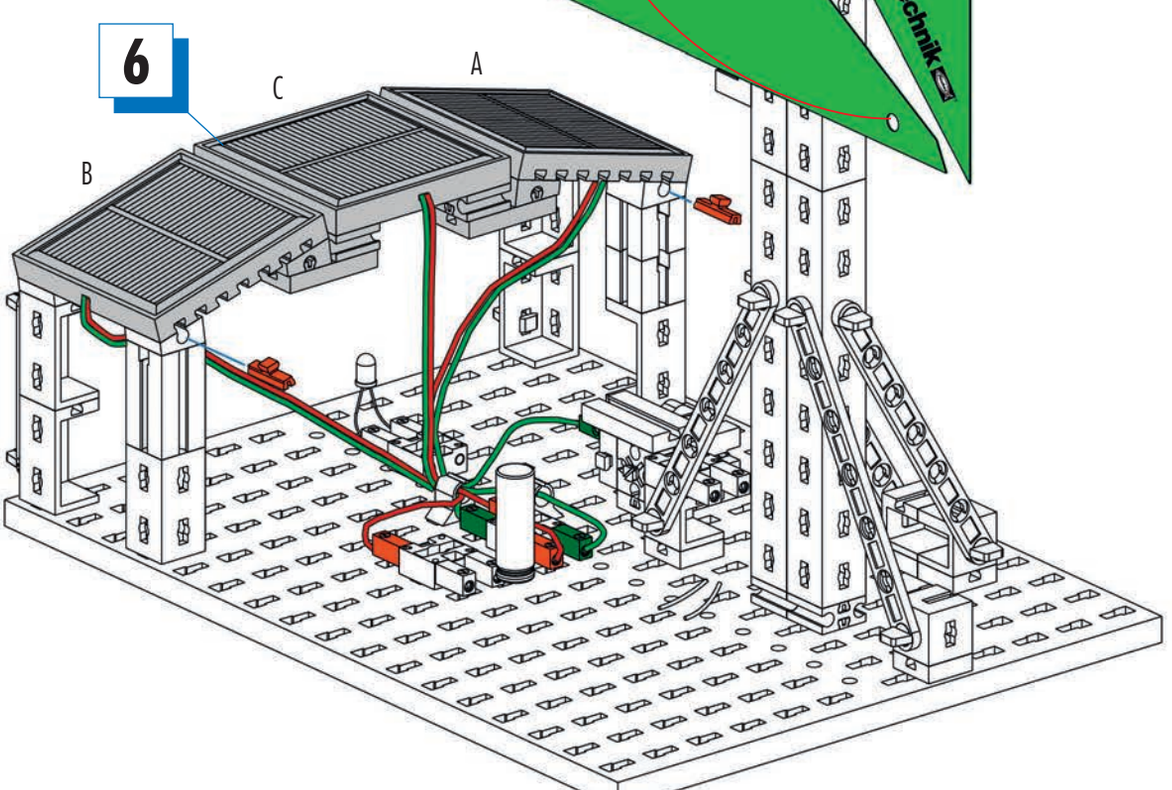
6
A
B
C

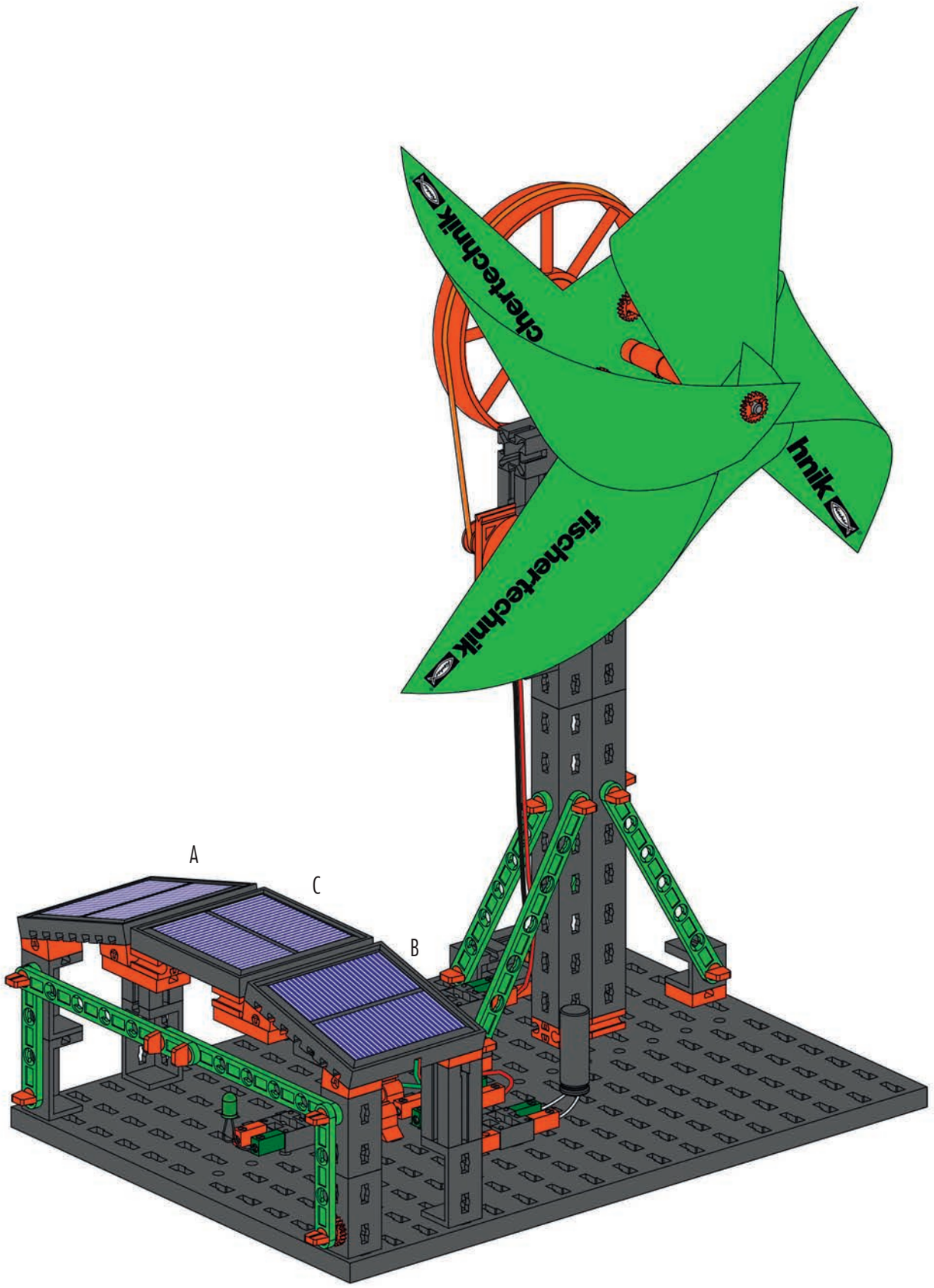
A
C
B
fischertechnik
hnik

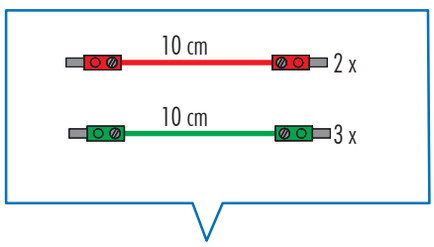
10 cm
2 x
10 cm
3 x

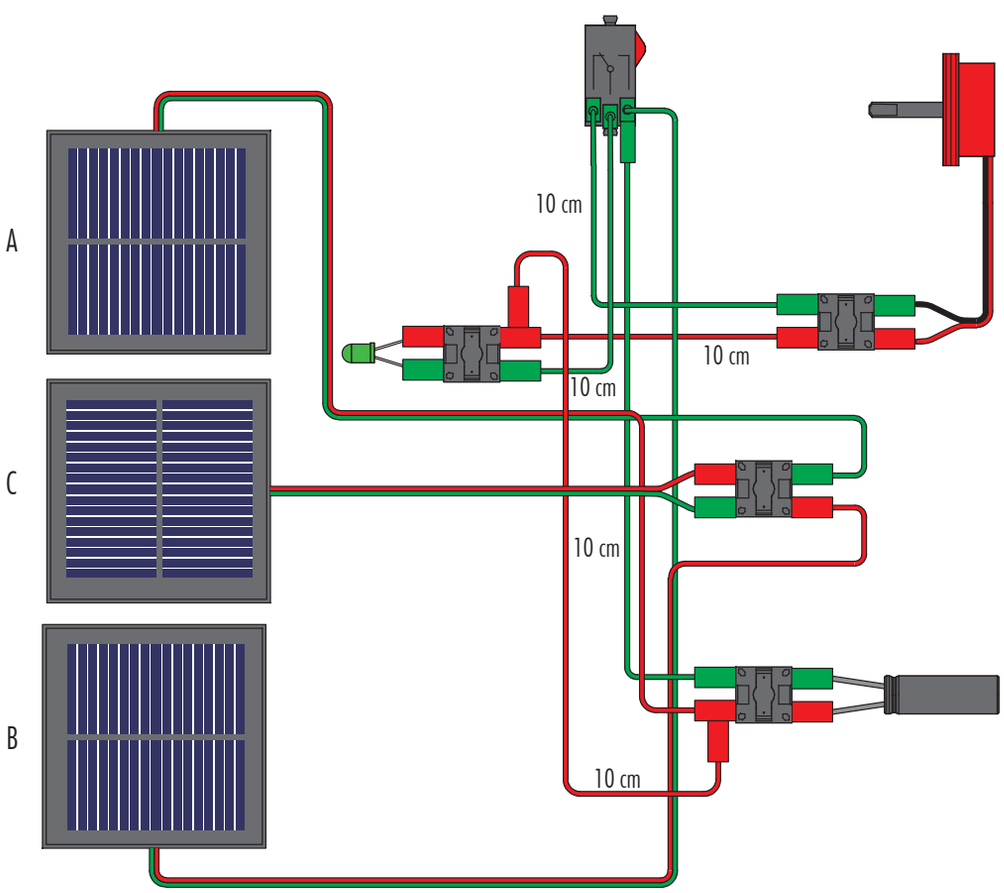
A
C
B
10 cm
10 cm
10 cm
10 cm

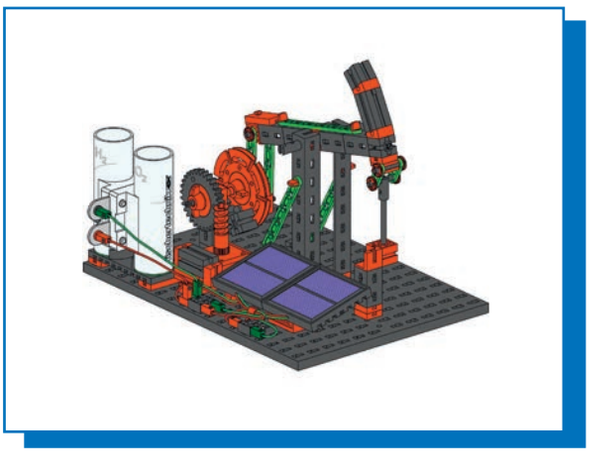

Solarpumpe mit Brennstoffzelle
Solar pump with fuel cell
Pompe solaire à cellule électrochimique

Zonne-energiepomp met brandstofcel
Bomba solar con célula de combustible
Bomba solar com célula a combustível

Pompa solare con cella di carburante
Солнечный насос с топливным элементом
配备燃料电池的太阳能泵

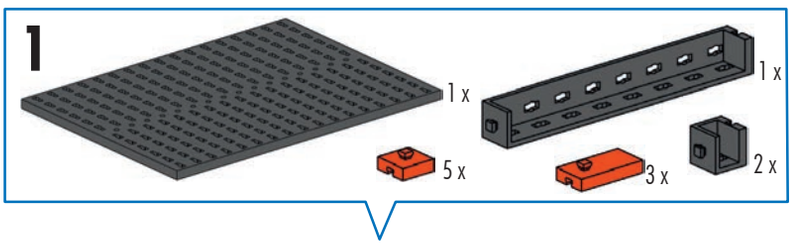

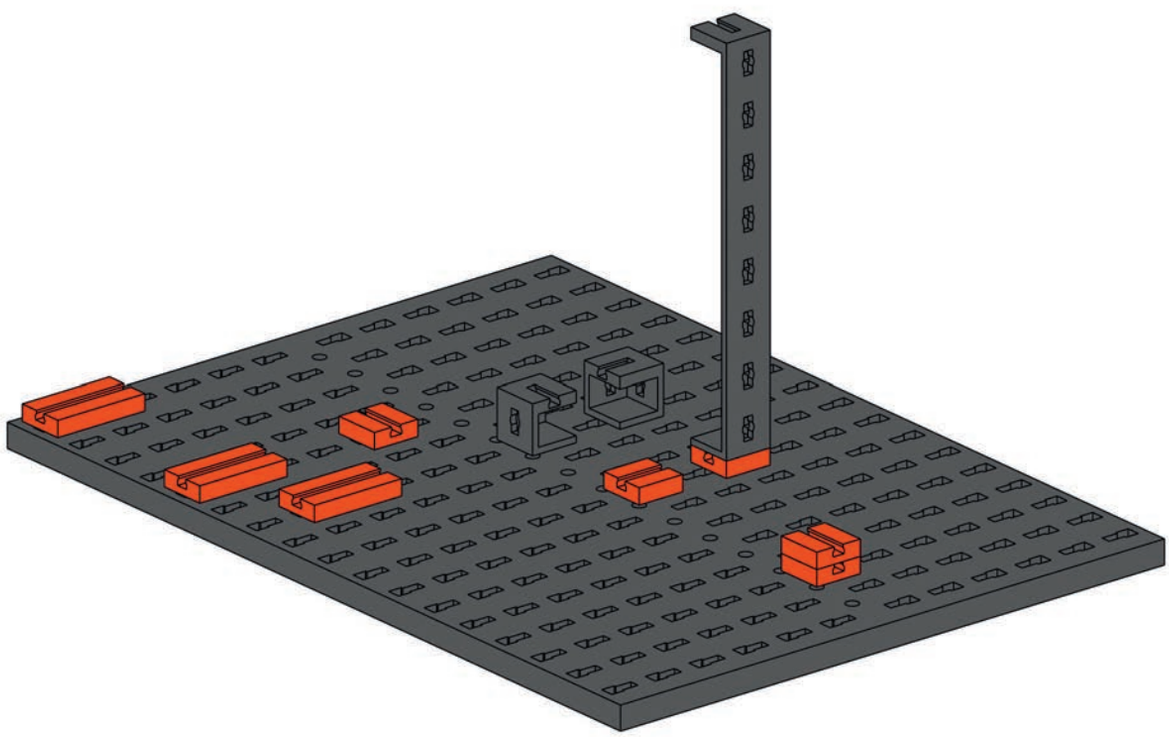

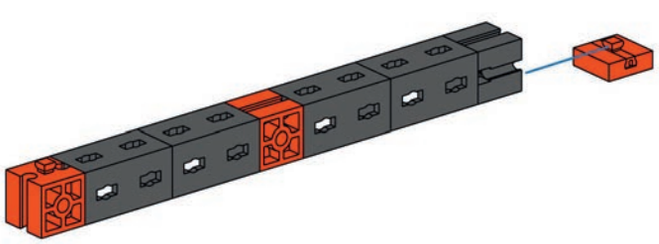

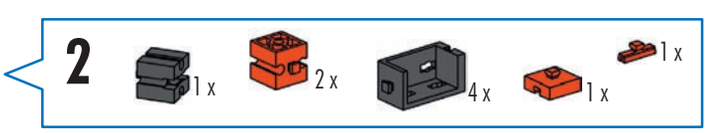

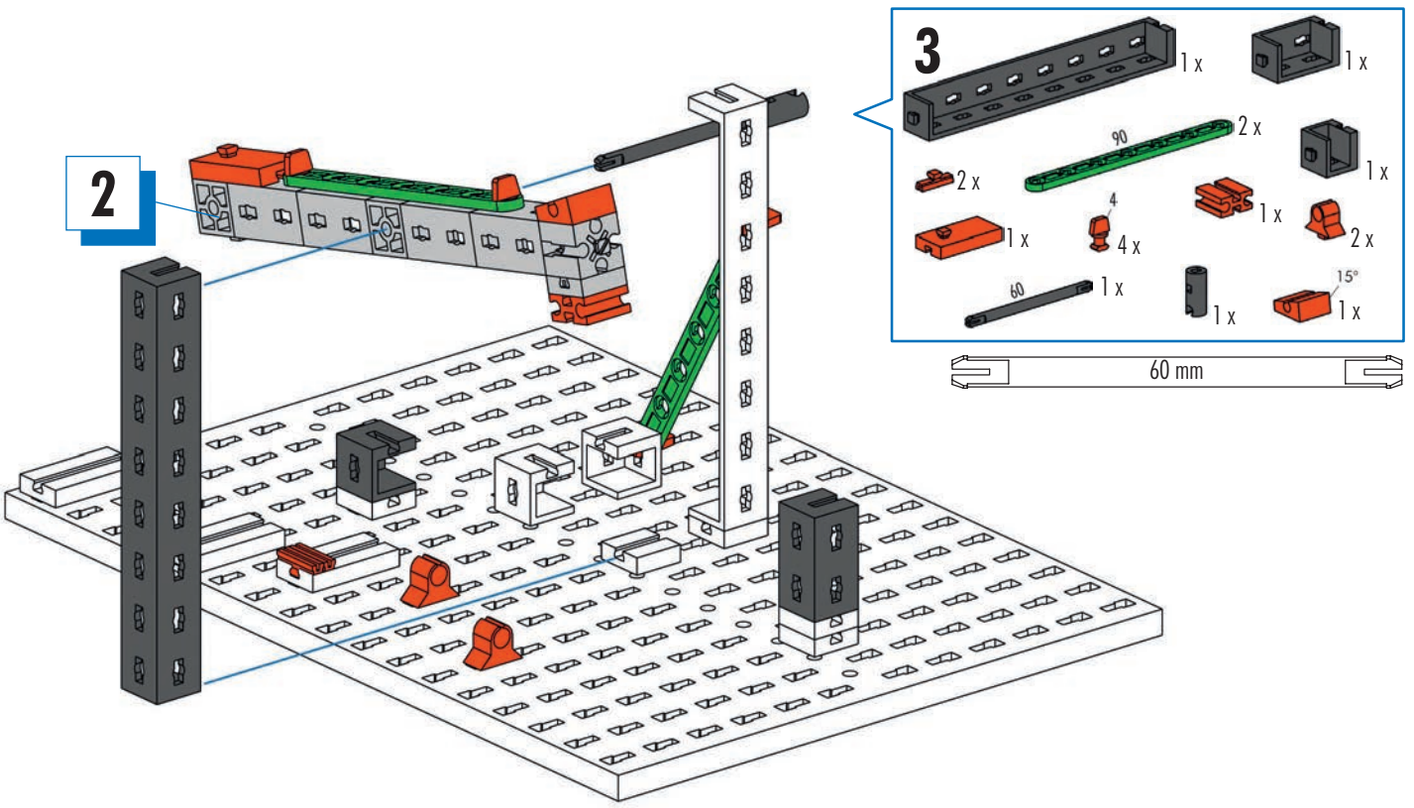
2
3
1 x
1 x
90
2 x
2 x
1 x
1 x
4
4 x
1 x
2 x
60
1 x
1 x
15°
1 x
60 mm

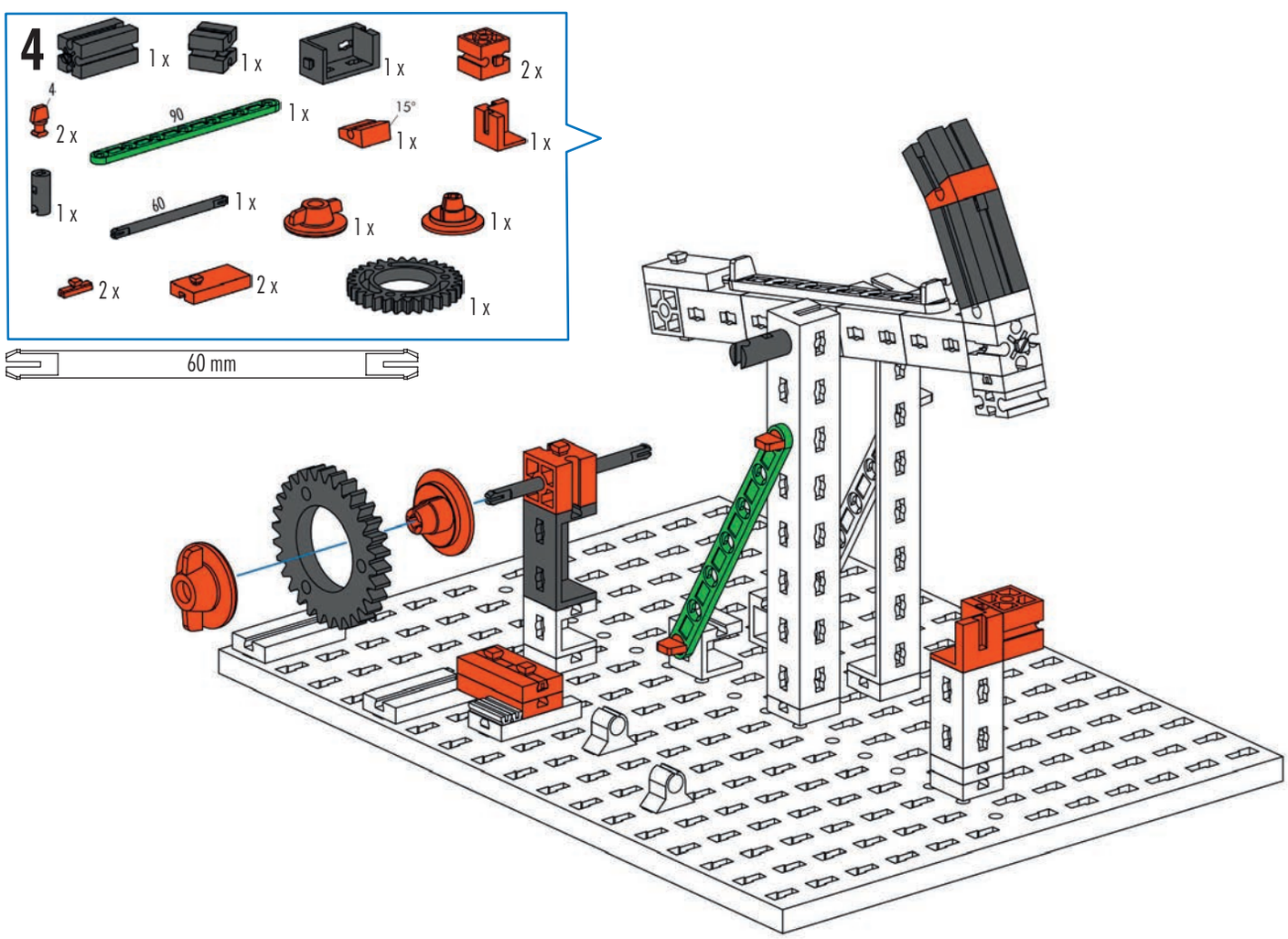
4
1 x
1 x
1 x
2 x
4
2 x
90
1 x
15°
1 x
1 x
1 x
1 x
60
1 x
1 x
1 x
2 x
2 x
1 x
60 mm

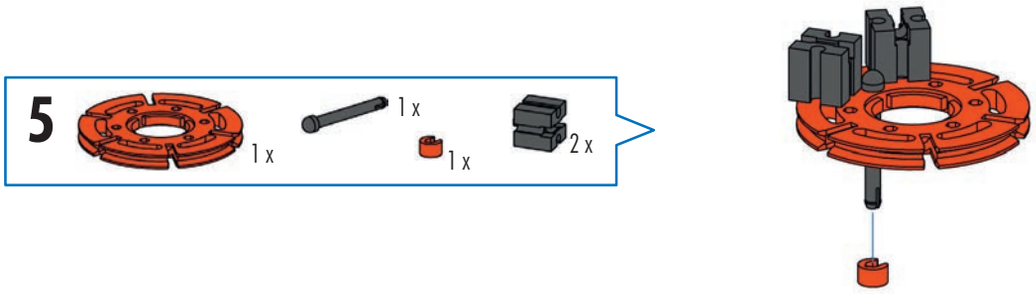
5
1 x
1 x
1 x
2 x

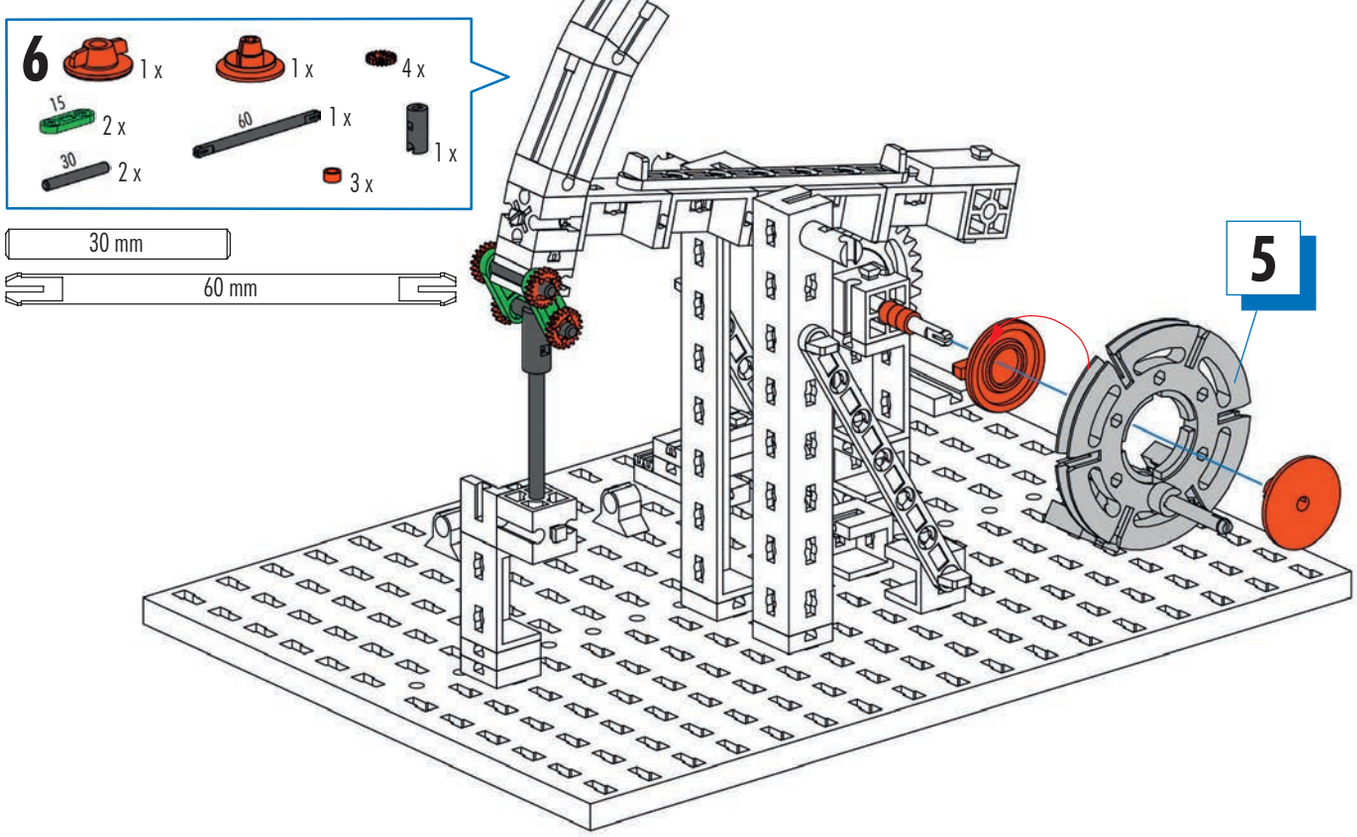
6
1 x
1 x
4 x
15
2 x
60
1 x
1 x
30
2 x
3 x
30 mm
60 mm
5

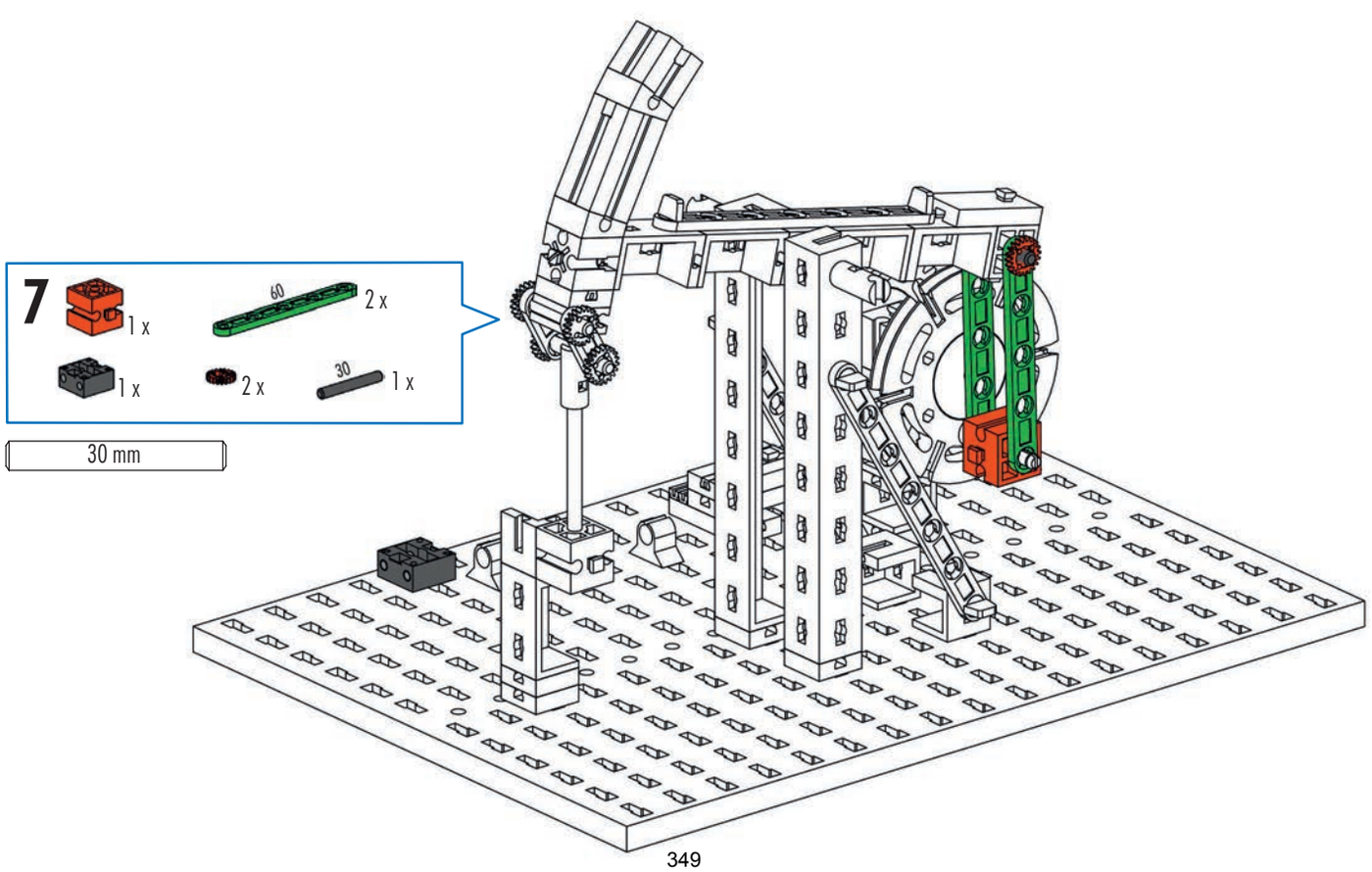
7
1 x
60
2 x
1 x
2 x
30
1 x
30 mm

8

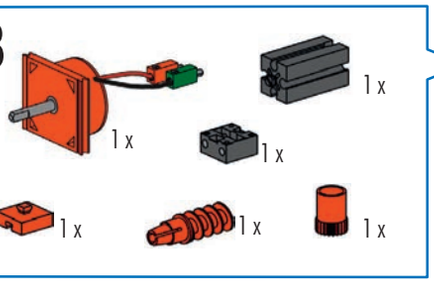

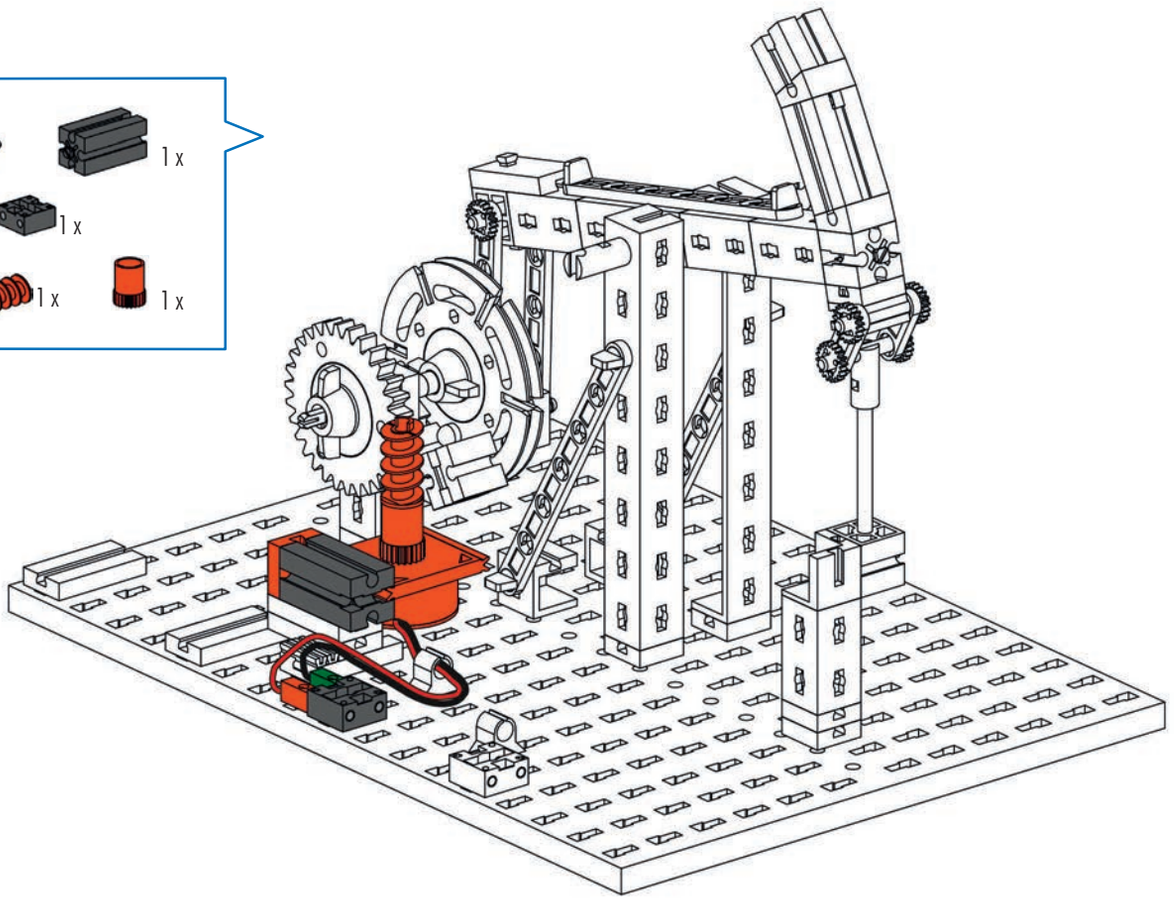

9

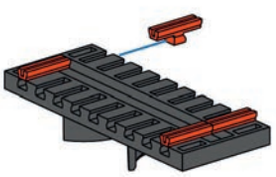

10

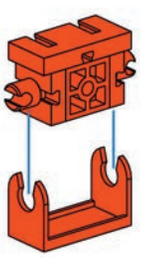

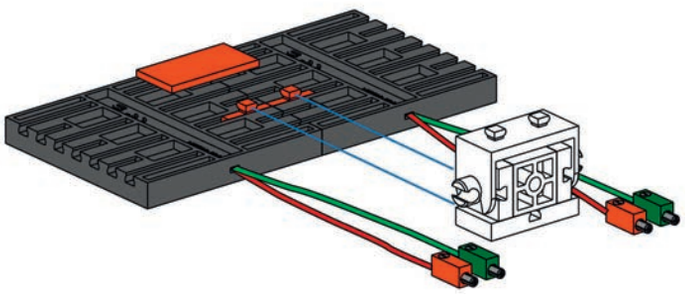

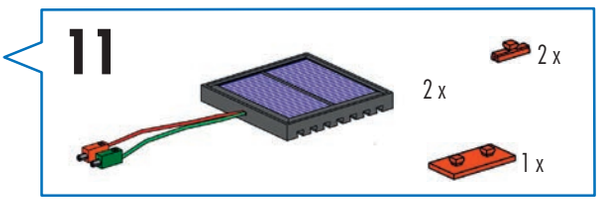
11
2 x
2 x
1 x

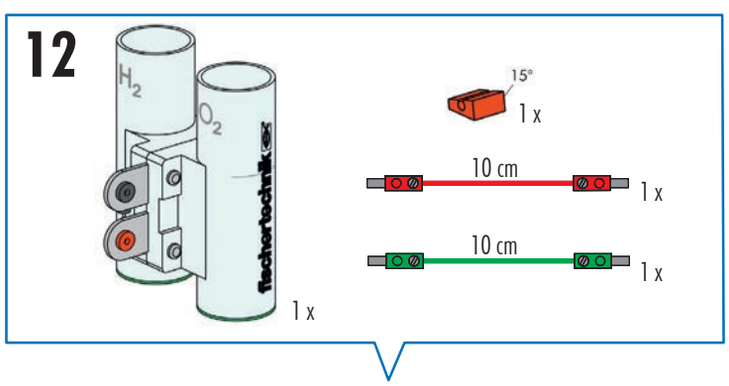
12
H_2
O_2
fischertechnik
1 x
15°
1 x
10 cm
1 x
10 cm
1 x

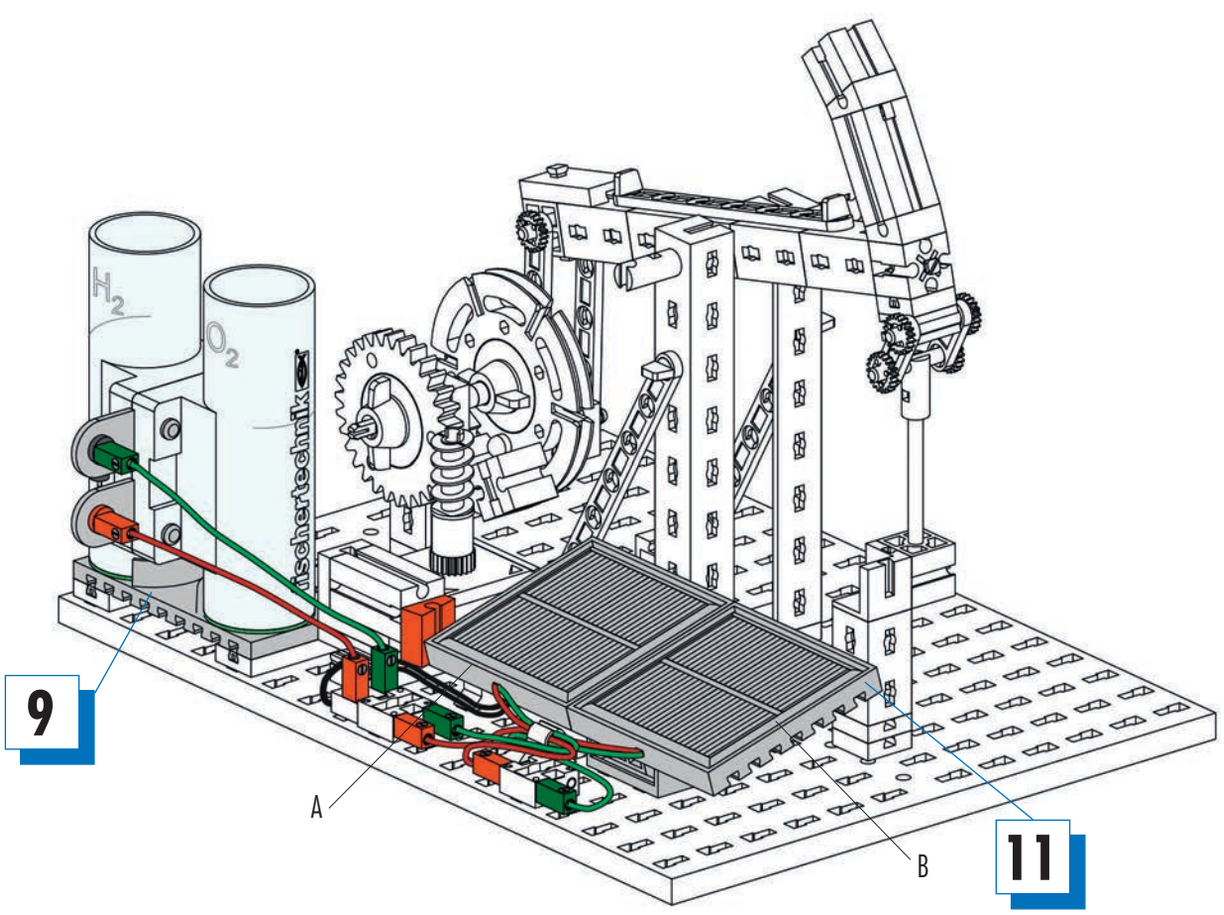
9
A
B
11
H_2
O_2
fischertechnik

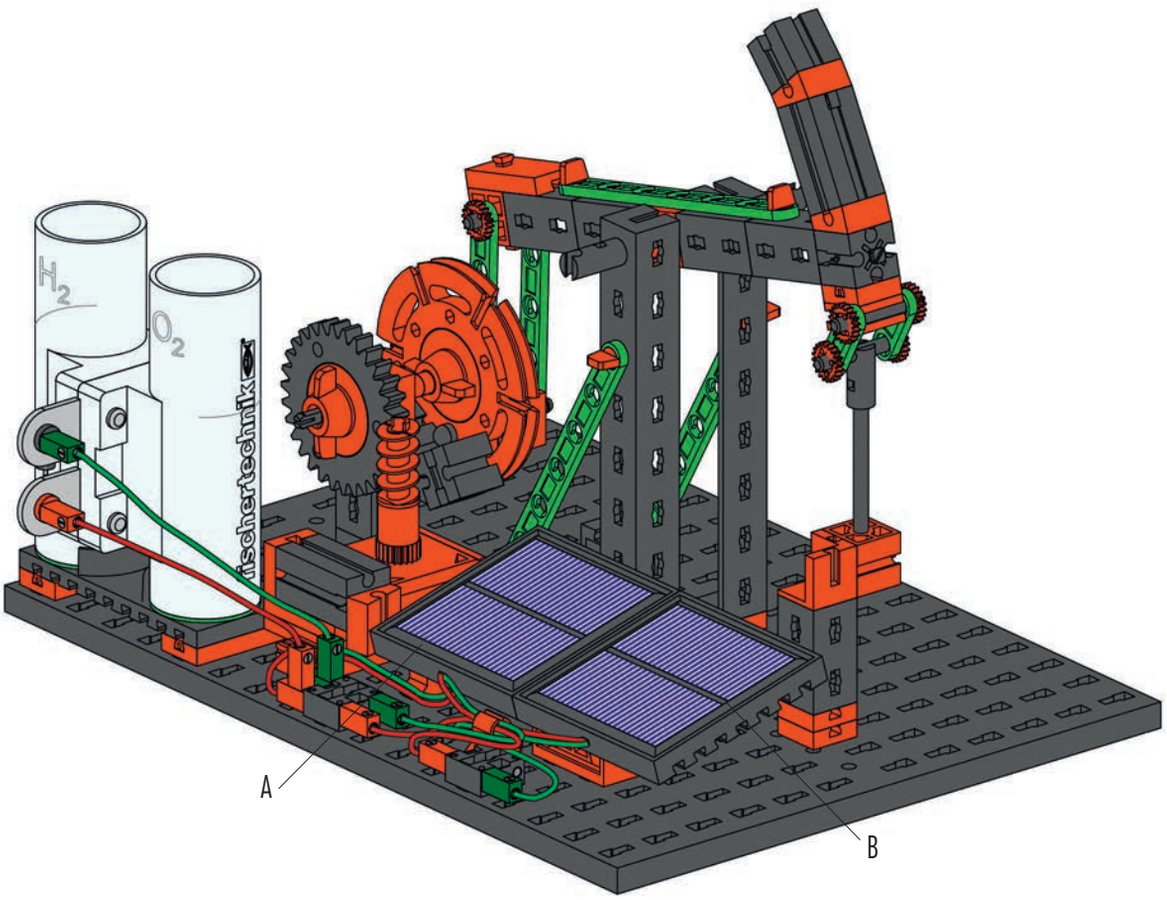

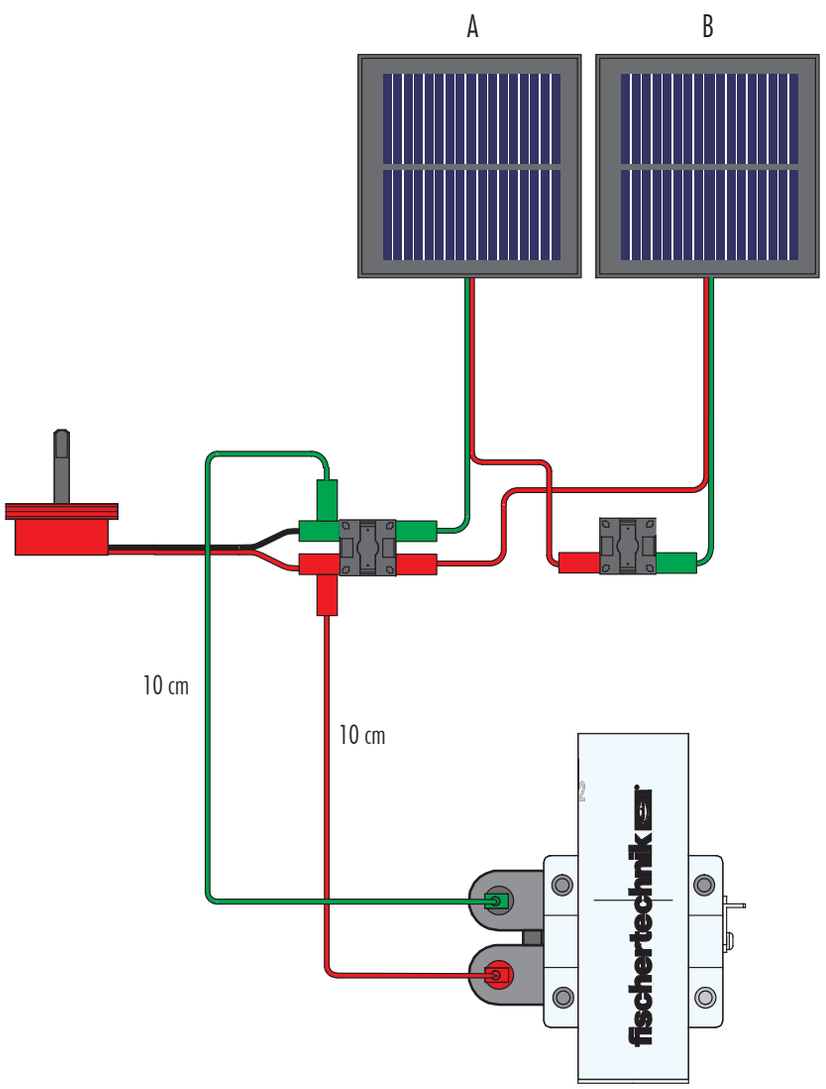

352

fischertechnik

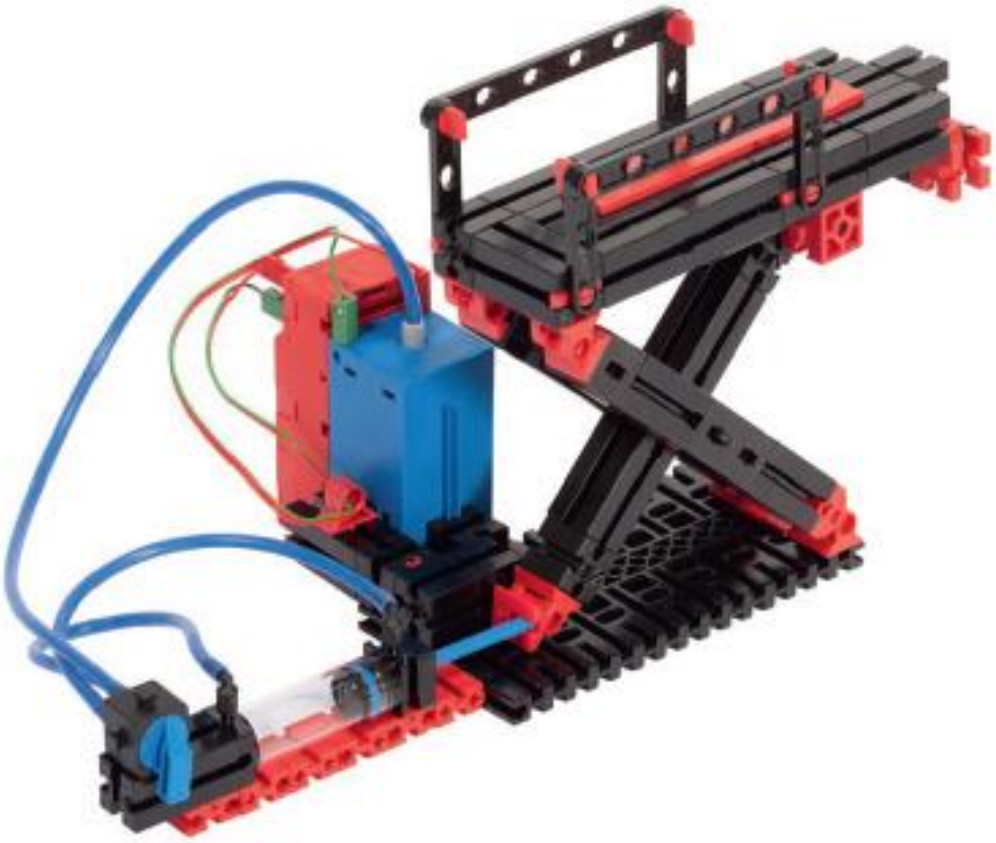

Pneumatics

Inhalt
Contents
Contenu
Inhoud
Contenido
Conteúdo
Contenuto
Содержание
目录

Einzelteilübersicht / Spare parts list / Liste des pièces détachées / Onderdelenoverzicht / Lista da piezas / Resumo de peça individual / Singoli componenti / Перечень деталей / 零件概览 2
Montagetipps / Tips for assembly / Tuyaux pour le montage / Montagetips / Consejos para el montaje / "Dicas" para montagem / Consigli per il montaggio / Советы по сборке / 装配建议 3

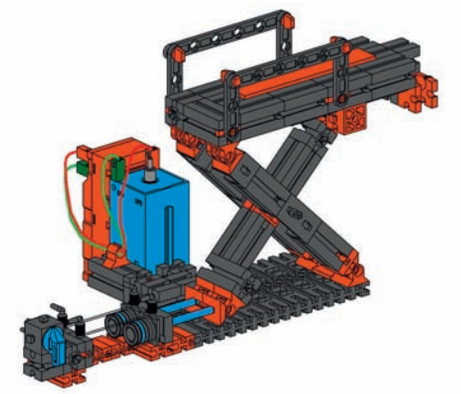

Scherenhubtisch / Scissors-type lift /Table élévatrice à ciseaux / Schaarheftafel / Mesa elevadora de pantógrafo / Mesa elevatória de tesouras / Piattaforma a pantografo / Ножничный подъёмный стол / 升降台 6

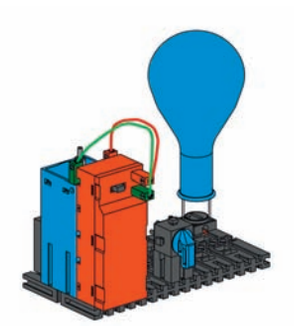

Luftballonpumpe / Balloon pump / Pompe à ballons / Luchtballonpomp / Bomba para globos / Bomba para balão de ar / Pompa per palloncini / Насос для воздушных шариков / 气球打气泵 13

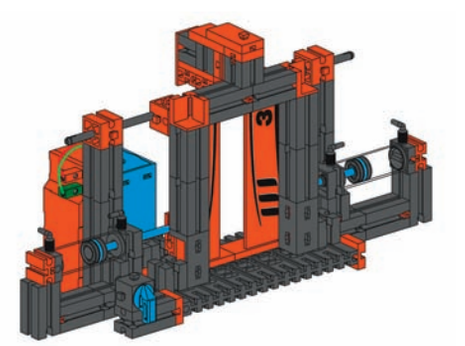

Doppelschiebetür / Double sliding doors / Double porte coulissante / Dubbele schuifdeur / Puerta corrediza doble / Porta de corrediça dupla / Doppia porta scorrevole / Двойная сдвижная дверь / 双滑动门 15

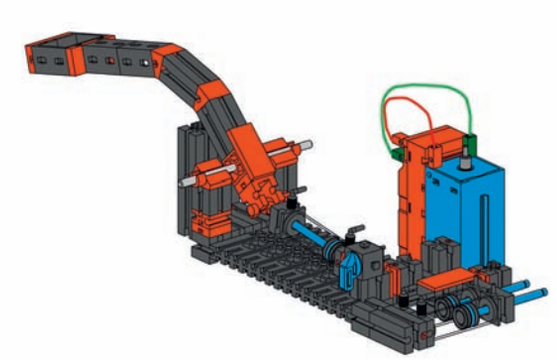

Katapult / Catapult / Catapulte / Katapult / Catapulta / Catapulta / Catapulta / Катапульта / 弹射器 20

Inhalt
Contents
Contenu
Inhoud
Contenido
Conteúdo
Contenuto
Содержание
目录

Basismodell / Basic model / Maquette de base / Basismodel / Modelo básico / Modelo básico / Modello base / Базовая модель / 基础标准型..... 26

Frontlader / Front loader / Chargeur frontal / Frontlader / Cargador frontal / Carregador frontal / Caricatore frontale / Фронтальный погрузчик / 前端式装载机..... 33

Heuballengreifer / Hay bale picker / Surélévateur de balles de foin / Hooibalengrijper / Manipulador de fardos de heno / Garra de fardos de feno / Pick-up per balle di fieno / Подборщик рулонов сена / 草捆抓爪 38

Baumstammgreifer / Tree trunk grip / Débusqueur forestier / Boomstamgrijper / Manipulador de troncos de árboles / Garra de troncos / Pick-up per tronchi d'albero / Лесопогрузчик / 木材抓斗..... 44

Bagger / Excavator / Tracteur à godet / Baggermachine / Excavadora / Escavadeira / Escavatore / Экскаватор / 挖掘机 50

Einzelteilübersicht
Spare parts list
Liste des pièces détachées

Onderdelenoverzicht
Lista da piezas
Resumo de peça individual

Singoli componenti
Перечень деталей
零件概览

	19 316 1 x
	31 010 4 x
	31 011 4 x
	31 019 1 x
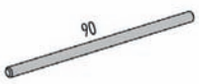	31 040 1 x
	31 058 2 x
	31 336 2 x
	31 337 2 x
	31 422 4 x
	31 426 8 x
	31 436 9 x
	31 592 4 x
	31 597 5 x
	31 642 3 x
	31 670 4 x
	31 674 4 x
	31 690 2 x

	31 708 1 x
	31 843 2 x
	31 848 4 x
	31 888 2 x
	31 894 1 x
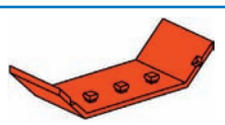	31 896 2 x
	31 915 1 x
	31 916 1 x
	31 981 3 x
	31 982 68 x
	31 983 1 x
	32 064 8 x
	32 071 12 x
	32 085 1 x
	32 316 1 x
	32 330 7 x
	32 870 2 x

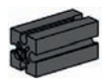	32 879 21 x
	32 881 23 x
	35 031 2 x
	35 049 11 x
	35 065 2 x
	35 067 1 x
	35 068 2 x
	35 073 2 x
	35 115 2 x
	35 129 1 x
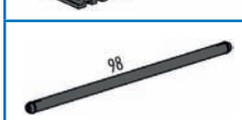	35 414 2 x
	35 969 5 x
	35 998 2 x
	36 210 1 x
	36 323 6 x
	36 324 6 x
	36 370 2 x

	36 443 1 x
	36 911 2 x
	36 912 4 x
	36 913 4 x
	36 914 6 x
	36 915 8 x
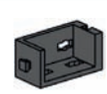	36 920 4 x
	36 922 2 x
	36 923 3 x
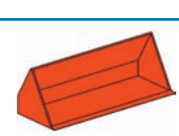	36 925 1 x
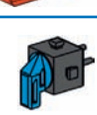	36 934 4 x
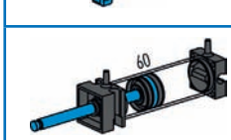	36 938 3 x
	36 952 4 x
	37 237 16 x
	37 468 31 x
	37 636 2 x
	37 679 15 x

Einzelteilübersicht
Spare parts list
Liste des pièces détachées
Onderdelenoverzicht
Lista da piezas
Resumo de peça individual
Singoli componenti
Перечень деталей
零件概览

	38 240 4 x
	38 241 3 x
	38 245 2 x
	38 246 18 x
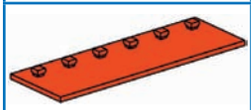	38 251 2 x
	38 261 3 x
	38 413 4 x

	38 414 3 x
	38 423 7 x
	38 428 5 x
	38 446 4 x
	106 766 2 x
	116 913 2 x
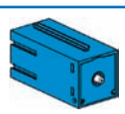	121 470 1 x

	121 640 1 x
	121 661 2 x
	122 363 1 x
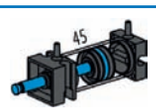	122 641 1 x
	122 646 2 x
	122 647 1 x
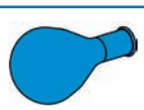	122 648 1 x

	122 649 1 x
	123 052 1 x
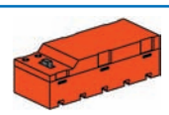	135 719 1 x

Montagetipps
Tips for assembly
Tuyaux pour le montage
Montagetips
Consejos para el montaje
"Dicas" para montagem
Consigli per il montaggio
Советы по сборке
装配建议

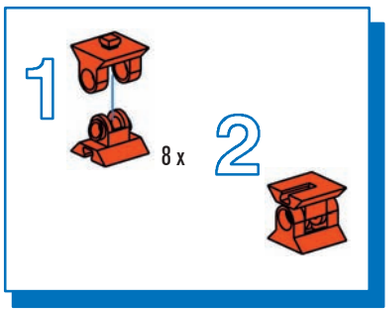

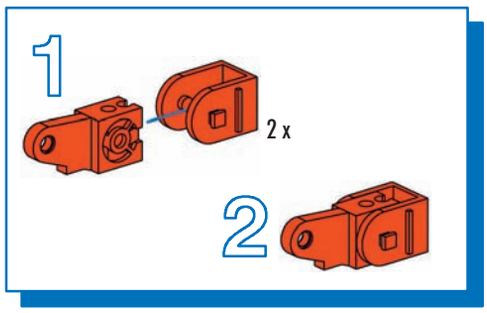

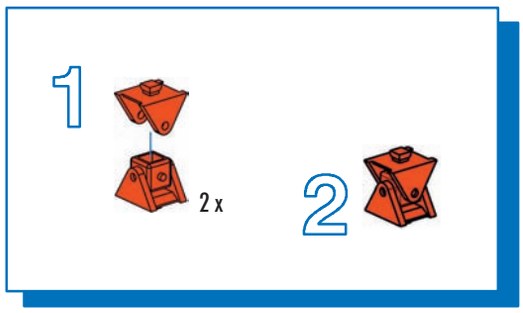

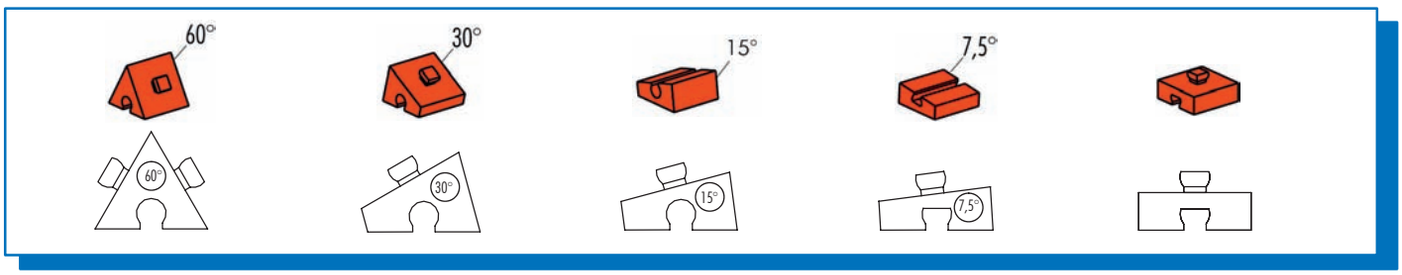

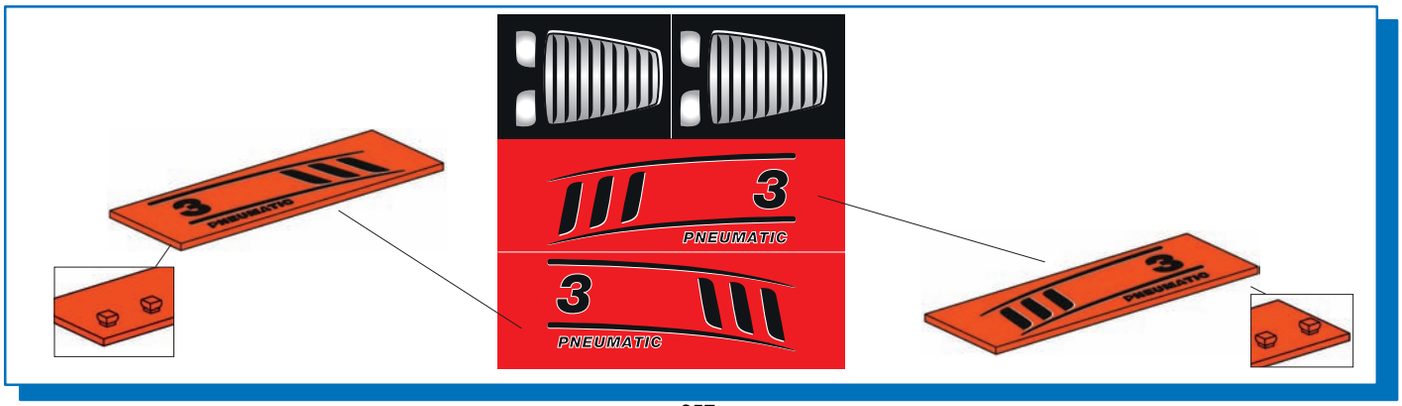

Montagetipps
Tips for assembly
Tuyaux pour le montage
Montagetips
Consejos para el montaje
"Dicas" para montagem
Consigli per il montaggio
Советы по сборке
装配建议

Kabel und Stecker
Plugs and cables
Fiches et des câbles

Stekkers en cables
Enchufes en cables
Cabos e contatos

Cavi e connettori
Провода и штекеры
电缆和插头

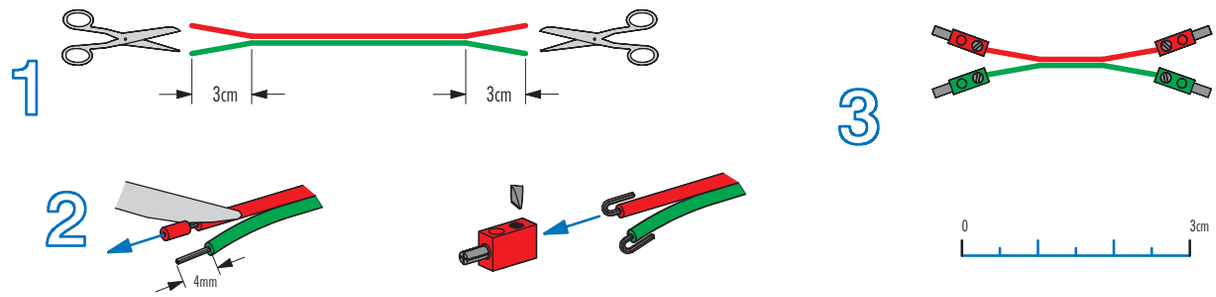

Schlauchzuschnitte
Hose cut to length
Découpes de tuyau

Slangdelen
Recortes de tubos flexibles
Recortes de mangueira

Spezzoni di tubo
Штуцеры
软管段

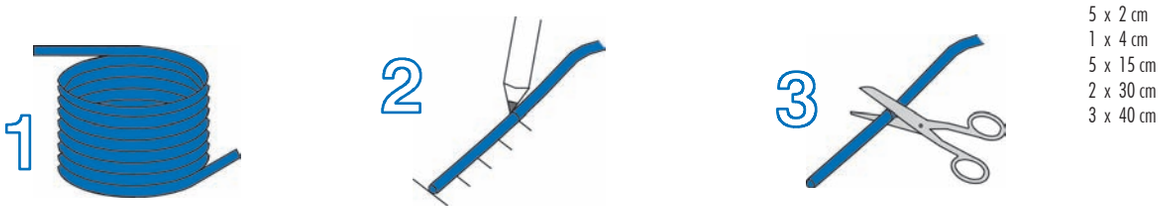

- Bei der Reifenmontage Profilrichtung links und rechts beachten!
- When mounting the tyres, please pay attention to the direction of the tread, left and right.
- Pour le montage des pneus, faire attention à la direction gauche et droite du profil.
- Let bij de bandenmontage op de profielrichting links en rechts.
- Al montar los neumáticos, tener en cuenta la dirección del perfil izquierdo y derecho.
- Ao proceder a montagem de pneus, levar em conta a direcção de perfil à esquerda e à direita.
- Al momento del montaggio delle gomme si deve osservare la direzione del profilo (a sinistra e destra)!
- При монтаже шин обратите внимание на правое и левое направление протектора!
- 装配轮胎时应注意左右轮胎沟纹的方向！

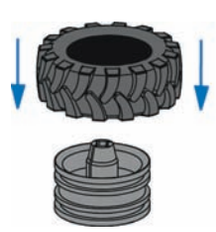

links
left
gauche
links
izquierda
à esquerda
sinistra
левое
左

rechts
right
droite
rechts
derecha
à direita
destra
правое
右

Sicherheitshinweise
Safety Information
Consignes de sécurité
Veiligheidsrichtlijnen
Indicaciones de seguridad
Observações sobre segurança
Informazioni per la sicurezza
Указания по технике безопасности
安全指南

- Achtung! Verletzungsgefahr an Bauteilen mit funktionsbedingten scharfen Kanten und Spitzen!
- Caution! Be careful not to hurt yourself on components with sharp or pointed edges!
- Attention! Risque de blessure sur les élements comportant des arêtes et o pointes vives indispensables au bon fonctionnement!
- Let op! U kunt zich bezeren aan bouwstenen met sherpe randen of punten!
- Attenzione! Esiste il pericolo di lesione con i pezzi di costruzione che hanno bordi e punte spigolosi necessari per la funzionalita del pezzo!
- Alle Einzelteile, insbesondere bewegliche Teile sind falls notwendig zu warten und zu reinigen.
- All components, especially moving parts, should be maintained and cleaned as necessary.
- Toutes les pièces détachées et en particulier les pièces mobiles, sont, si nécessaire, à entretenir et à nettoyer.
- Alle onderdelen, vooral de bewegende delen, kunnen, indien noodzakelijk, onderhouden en gereinigd worden.
- Es necesario limpiar y mantener en buen estado todas las diferentes piezas - especialmente las piezas móviles.
- Atenção! Perigo de ferimentos em peças componentes com cantos vivos e pontas obrigatórios para o funcionamento !
- Attenzione! Pericolo di lesioni dovute a componenti con spigoli vivi e punte per motivi funzionali!
- Будьте осторожны! Об острые края деталей и и наконечники можно порезаться!
- 注意！
因功能需要而带有锋利的棱边和尖角的部件可能会带来受伤危险！
- Caso necessário, todas as peças individuais, especialmente peças móveis, tem que ser submetidas à manutenção e ser limpadas.
- Se necessario, tutti i singoli componenti, soprattutto le parti mobili, si devono eventualmente sottoporre a manutenzione e pulizia.
- Все детали, особенно подвижные, требуют ухода и чистки.
- 必要时应保养和清洁所有零件，尤指运动部件。

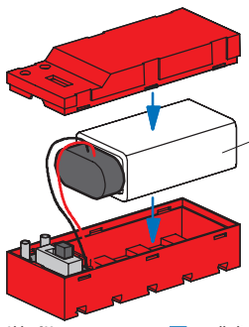

9V E-Block
6F22 / 6R61
⎓

Batterie ist nicht Inhalt der Packung
Battery not included
Batterie non comprise
De batterij wordt niet meegeleverd
La bateria no está incluida en el suministro
A bateria não é o conteúdo da embalagem
La batteria non è inclusa nella confezione
Батарея в комплект не входит
包装中不含电池

1 Batterie 9Volt-Block Alkaline oder 1 NiMH-Akku 9V

- Nicht wiederaufladbare Batterien dürfen nicht geladen werden
- Aufladbare Batterien dürfen nur von Erwachsenen geladen werden
- Aufladbare Batterien sind aus dem Batteriehalter herauszunehmen, bevor sie geladen werden.
- Batterien müssen mit der richtigen Polarität eingelegt werden.
- Leere Batterien müssen aus dem Spielzeug herausgenommen werden
- Die Anschlussklemmen dürfen nicht kurzgeschlossen werden.
- Verbrauchte Batterien dem Sondermüll zuführen.
- Drähte nicht in Steckdose einführen!
- Ladegerät regelmäßig auf Schäden überprüfen.Bei einen Schaden darf das Ladegerät bis zur vollständigen Reparatur nicht mehr verwendet werden.
- Alle elektrischen Bauteile (Motoren, Lampen) dürfen ausschließlich an Stromversorgungen von fischertechnik angeschlossen werden.

9V rechargeable battery or 9 V alkaline dry cell

- Do not attempt to charge NON-rechargeable batteries.
- Rechargeable batteries are only to be charged by adults.
- Take rechargeable batteries out of the battery tray before charging them.
- Insert batteries with the correct polarity.
- Remove dead batteries from the toy.
- Do not short circuit the connecting terminals!
- Discard spent dry cells at special waste disposal centre.
- Do not insert the wires into an outlet!
- Regularly inspect battery charger for damage.If the battery charger has been damaged, it should not be used further until fully repaired.
- No electrical components (motors, lamps) are to be connected to any other power supply than that provided by fischertechnik.

pile 9V où accu 9V

- Il est interdit de recharger des piles qui ne sont pas des accumulateurs
- Le chargement des accumulateurs doit toujours se faire par des adultes
- Retirer les accumulateurs du support de pile avant de les recharger.
- Veiller à la polarité correcte lors de la mise en place des piles.
- Retirer impérativement les piles ou accumulateurs vides du jouet.
- Il est interdit de court-circuiter les bornes de raccordement.
- Jeter les piles usagées dans un conteneur spécial réservé à cet effet.
- Ne pas introduire les fils dans une prise !
- Contrôlez régulièrement le chargeur en vue d'éventuelles détériorations
- En cas de détérioration, il est interdit d'utiliser le chargeur jusqu'à ce qu'il ait été intégralement réparé
- Tous les composants électriques (moteurs, lampes) ne doivent être branchés aux alimentations électriques uniquement que par la société Fischertechnik.

alkaline batterije of oplaadbare batterije (9Volt)

- Niet-oplaadbare batterijen mogen niet worden opgeladen.
- Oplaadbare batterijen mogen uitsluitend door volwassenen worden opgeladen.
- Oplaadbare batterijen moeten uit de batterijhouder worden verwijderd, voordat deze worden opgeladen.
- De batterijen moeten met de juiste polariteit worden geplaatst.
- Lege batterijen moeten uit het speelgoed worden verwijderd.
- De aansluitklemmen mogen niet worden kortgesloten.
- Afleveren gebruikte batterijen bij het klein chemisch afval (KCA).
- Geen draden in de contactdoos steken!
- Laadtoestel regelmatig controleren op schade.Bij schade mag het laadtoestel niet meer gebruikt worden tot het volledig hersteld is.
- Alle elektrische componenten (motoren, lampen) mogen uitsluitend op stroomvoorzieningen van fischertechnik worden aangesloten.

pila alcalina bloque de 9 Voltios o acumulador NiMH- de 9 Voltios

- Las pilas no recargables no pueden ser cargadas
- Las pilas recargables sólo pueden ser cargadas por un adulto
- Las pilas recargables deben ser extraídas del compartimiento de pilas antes de que sean cargadas.
- Las pilas deben ser colocadas con la polaridad correcta.
- Las pilas descargadas deben ser extraídas del juguete
- Los bornes de conexión no pueden ser puestos en cortocircuito.
- Retirar las baterías viejas, desechándolas en un depósito de basuras especiales.
- No introducir hilos en la toma de corriente!
- Comprobar con regularidad si el cargador presenta daños.En caso de presentar daños, el cargador no debe volver a ser utilizado hasta que esté completamente reparado.
- Todos los componentes eléctricos (motores, luces) deben conectarse a la alimentación de corriente de la técnica Fischer exclusivamente.

Bateria alcalina de bloco de 9 V ou acumulador NiMH- de 9 V

- Pilhas não recarregáveis não devem ser novamente carregadas.
- Pilhas recarregáveis somente devem ser recarregadas por adultos.
- Pilhas recarregáveis devem ser retiradas do compartimento de pilhas antes de serem carregadas.
- As pilhas devem ser colocadas com a polaridade correta.
- As pilhas descarregadas devem ser retiradas do brinquedo.
- Os terminais de conexão não devem ser curto-circuitados.
- Eliminar as baterias esgotadas como desperdício perigoso
- Nunca introduzir fios na tomada!
- Verificar regularmente se o carregador apresenta danos.Em caso de dano, o carregador não deverá ser utilizado enquanto não estiver plenamente consertado.
- Todas as peças componentes elétricas (motores, lâmpadas) só podem ser exclusivamente conectadas em abastecimentos de corrente da Fischertechnik.

1 batteria alcalina da 9 V o 1 batteria NiMH- ricaricabile da 9V

- Le batterie non ricaricabili non devono essere ricaricate
- Le batterie ricaricabili devono essere ricaricate da persone adulte
- Le batterie ricaricabili si devono estrarre dal supporto prima di ricaricarle.
- Le batterie si devono inserire rispettando la polarità.
- Togliere le batterie dal giocattolo quando sono scariche
- I morsetti di allacciamento non devono essere cortocircuitati.
- Smaltire le batterie usate negli appositi contenitori per la raccolta differenziata.
- Non inserire i fili nella presa elettrica.
- Controllare periodicamente se il caricabatterie presenta dei danni.In caso di danni, il caricabatterie non deve più essere utilizzato fino alla riparazione.
- Tutti i componenti elettrici (motori, lampadine) devono essere collegati esclusivamente ad alimentatori fischertechnik.

1 алкалиновая батарейка на 9 В или 1 никель-кадмиевый аккумулятор, 9 В

- Не пытайтесь заряжать неперезаряжаемые батарейки.
- Зарядку перезаряжаемых аккумуляторов разрешается выполнять только взрослым.
- Перед зарядкой перезаряжаемых аккумуляторов извлеките их из аккумуляторного отсека.
- При установке аккумуляторов на место соблюдайте полярность.
- Разряженные батарейки необходимо извлечь из игрушки.
- Не замыкайте накоротко соединительные клеммы.
- Использованные батареи утилизовать как спецотходы.
- Не вставляйте в розетку провода!
- Регулярно проверяйте зарядное устройство на отсутствие повреждений.При налиРии повреждений использовать зарядное устройство до выполнения его полного ремонта не разрешается.
- Все электрические детали (электромоторы, лампочки.) можно подключать только к источникам электропитания от fischertechnik.

1 个 9V 的碱性方电池或 1 个 9V 的 NiMH- 蓄电池

- 不得给非充电电池充电
- 只允许由成年人给充电电池充电
- 在充电前必须将充电电池从电池夹中取出。
- 必须按照正负极正确放入电池。
- 必须从玩具中取出没有电的电池
- 接线柱不允许被短路。
- 用完了的电池应作为特种垃圾处理。
- 禁止将金属丝插入插座！
- 经常检查充电器是否有损坏情况。如果充电器有损，直到完全修好为止不 可以再使用。
- 只允许将所有电气部件 (传感器，电机，灯泡) 与慧鱼技术产品的电源装置相连接

Achtung. Kinder unter acht Jahren können an nicht aufgeblasenen oder geplatzten Ballons ersticken. Die Aufsicht von Erwachsenen ist erforderlich. Nicht aufgeblasene Ballons sind von Kindern fernzuhalten. Geplatzte Ballons sind unverzüglich zu entfernen. Hergestellt aus Naturkautschuklatex.

Caution. Children under eight years of age can suffocate on uninflated or ruptured balloons. Supervision by an adult is essential. Keep uninflated balloons away from children. Properly dispose of ruptured balloons immediately. Produced of natural rubber.

Attention. Les enfants de moins de huit ans risquent de s'asphyxier avec des ballons non gonflés ou éclatés. La surveillance d'un adulte est imposé. Éloignez les ballons non gonflés des enfants. Écartez les ballons éclatés dans l'immédiat. Fabriqué en caoutchouc naturel.

Attentie. Kinderen jonger dan 8 jaar kunnen stikken in niet opgeblazen of geknapte ballonnen. Daarom is toezicht van een volwassene noodzakelijk. Dat betekent ook, dat niet opgeblazen ballonnen uit de buurt van kinderen moeten worden bewaard. Geknapte ballonnen moeten onmiddellijk worden weggegooid. Vervaardigd van latex.

Atención. Los niños menores de 8 años pueden asfixiarse con globos no inflados o reventados. Se requiere la supervisión por parte de adultos. Globos no inflados deben mantenerse alejados de los niños. Los balones reventados deben ser eliminados inmediatamente. Fabricados de látex de caucho natural.

Atenção. Crianças menores de oito anos podem sufocar em balões não cheios ou que estouraram. É necessária vigilância por parte de adultos. Manter balões não preenchidos fora do alcance das crianças. Remover imediatamente balões que estouraram. Fabricado com látex de borracha natural.

Attenzione! I bambini con meno di otto anni di età possono soffocare con palloncini non gonfiati o scoppiati. È necessario il controllo da parte degli adulti. Tenere i palloncini non gonfiati lontano dalla portata dei bambini. I palloncini scoppiati si devono rimuovere immediatamente. Prodotti in lattice di caucciù naturale.

Внимание. Дети младше восьми лет могут задохнуться от ненадутого или лопнувшего шарика. Разрешайте играть детям только под надзором взрослых. Убирайте ненадутые шарики от детей. Сразу же выбрасывайте лопнувшие шарики. Изготовлено из латекса на основе натурального каучука.

注意。未充气或破裂的气球可能对八岁以下儿童产生窒息危险。需有成人监护。未充气的气球要远离儿童。破裂的气球应立刻丢弃。由天然胶乳制成。

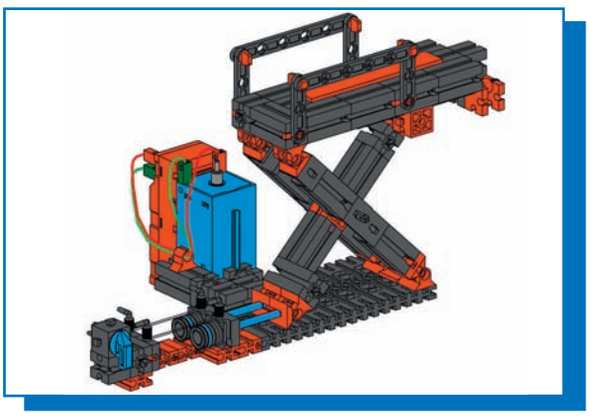

Scherenhubtisch
Scissors-type lift
Table élévatrice à ciseaux

Schaarheftafel
Mesa elevadora de pantógrafo
Mesa elevatória de tesouras

Piattaforma a pantografo
Ножничный подъёмный стол
升降台

Versuch 1
Task 1
Exercice 1

Taak 1
Tarea 1
Tarefa 1

Prova 1
Опыт 1
试验 1

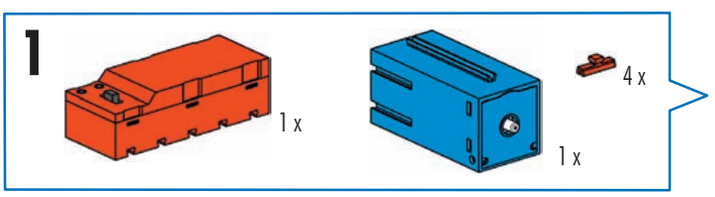

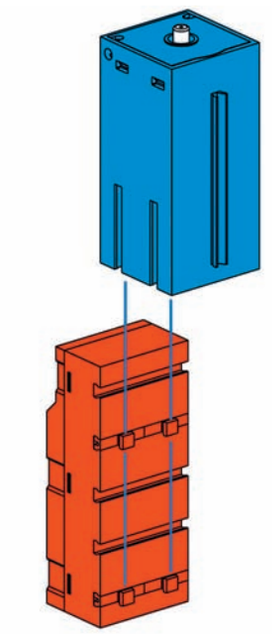

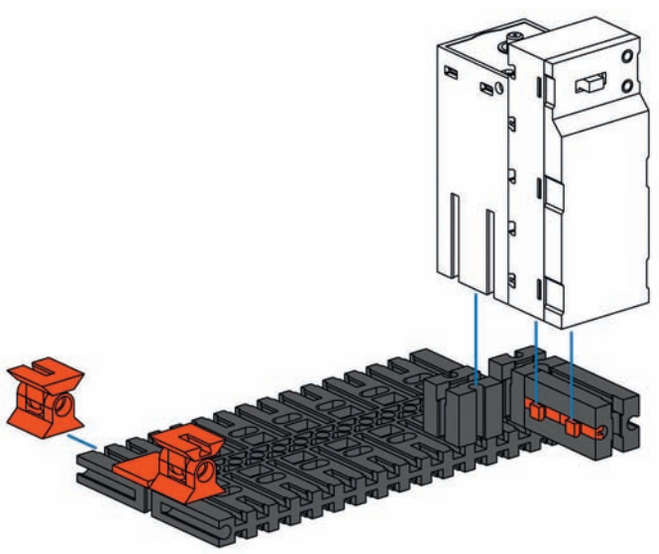

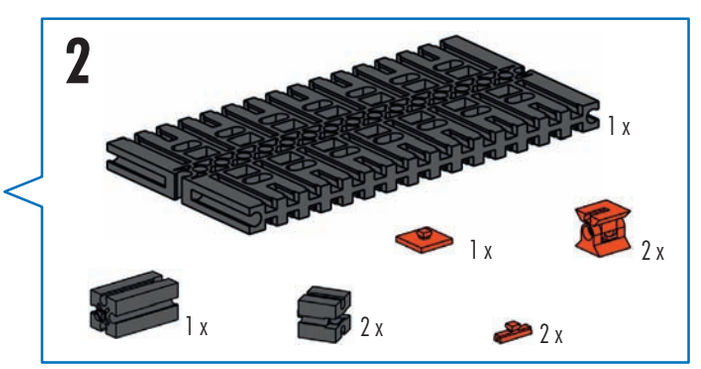

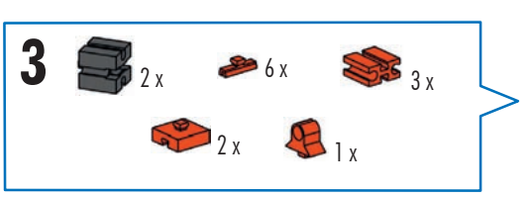

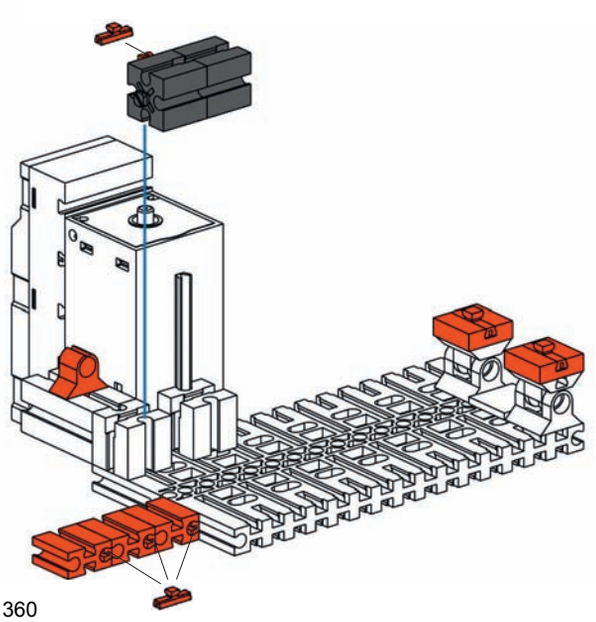

360

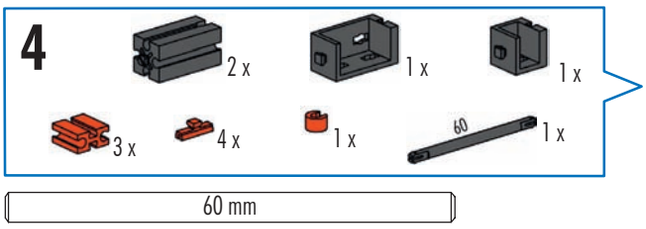
4
2 x
1 x
1 x
3 x
4 x
1 x
60
1 x
60 mm

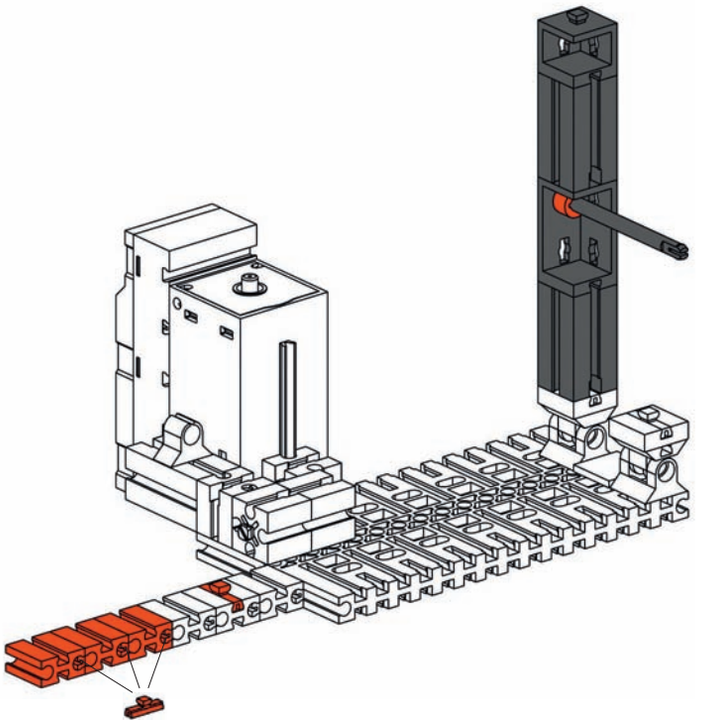

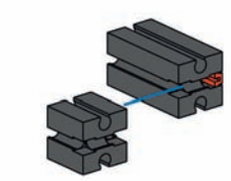

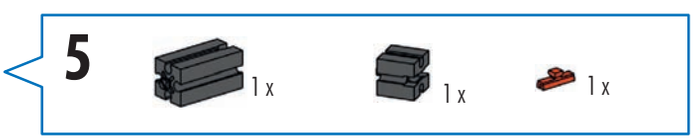
5
1 x
1 x
1 x

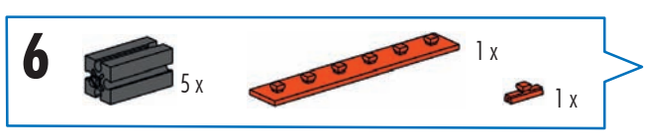
6
5 x
1 x
1 x

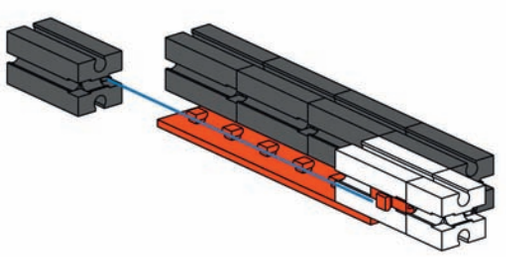

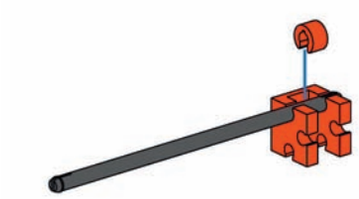

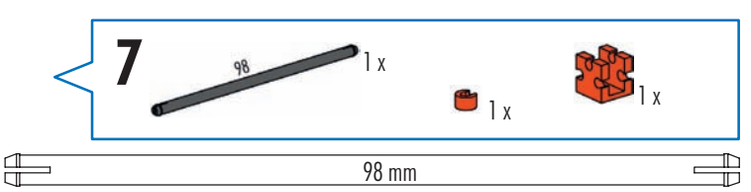
7
98
1 x
1 x
1 x
98 mm

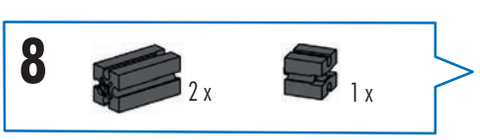
8
2 x
1 x

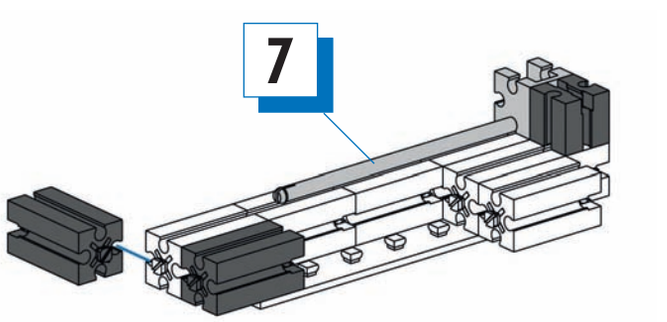
7

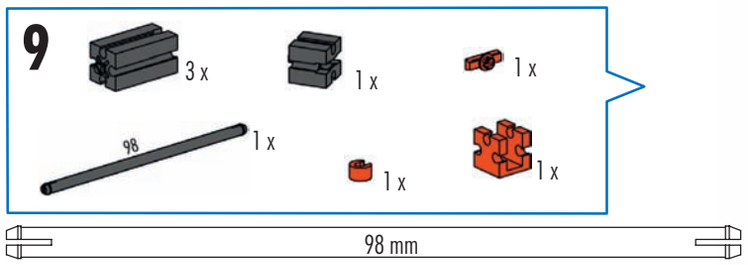
9
3 x
1 x
1 x
98
1 x
1 x
1 x
98 mm

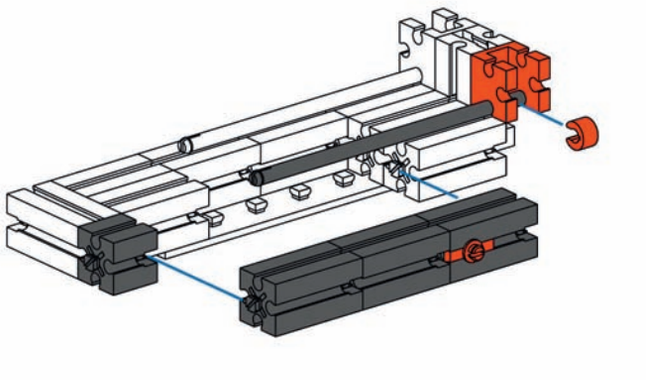

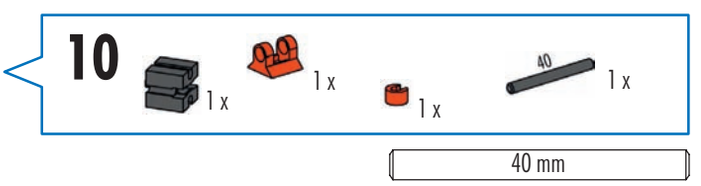
10
1 x
1 x
1 x
40
1 x
40 mm

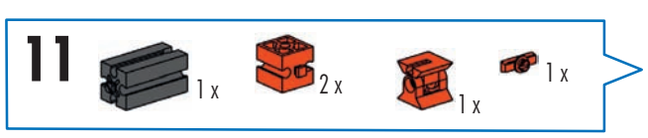
11
1 x
2 x
1 x
1 x

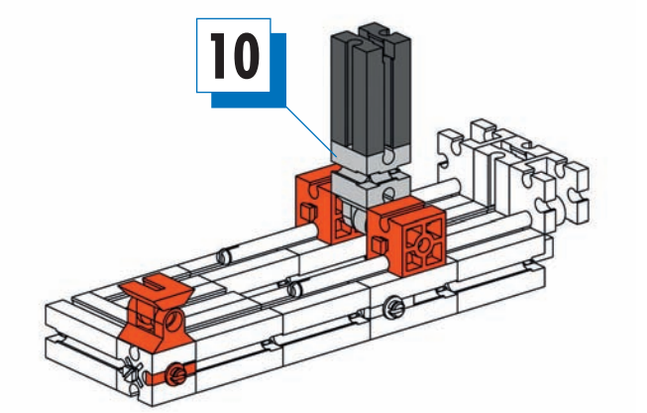
10

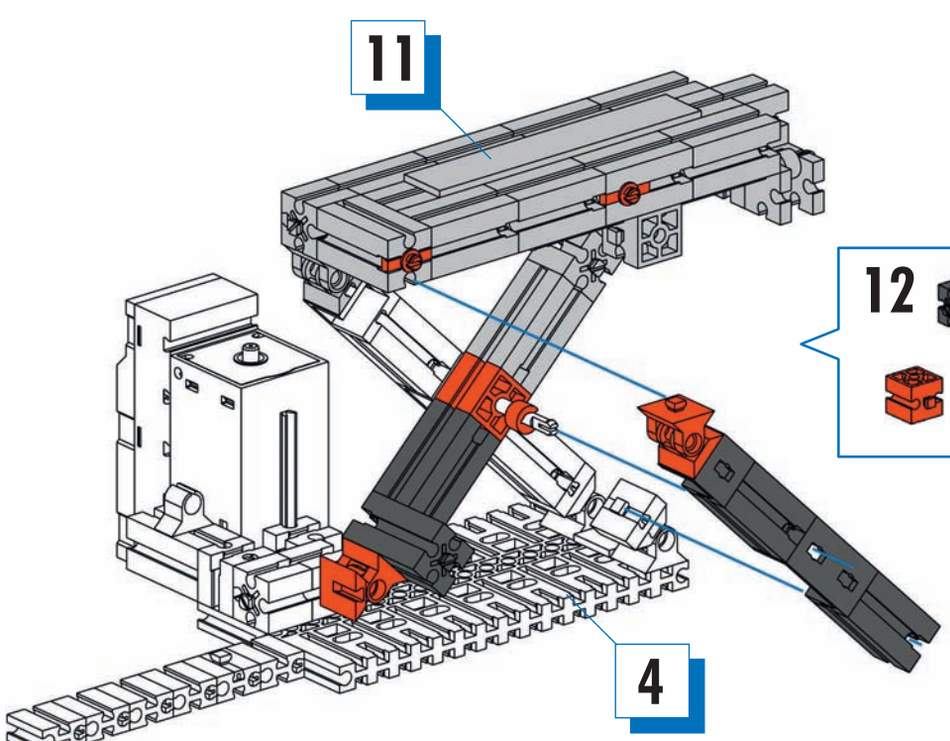
11
4

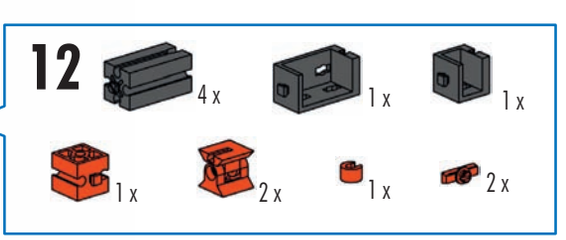
12
4 x
1 x
1 x
1 x
2 x
1 x
2 x

13

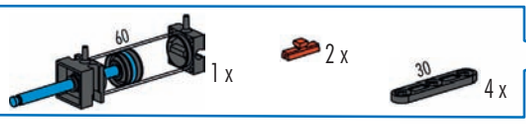

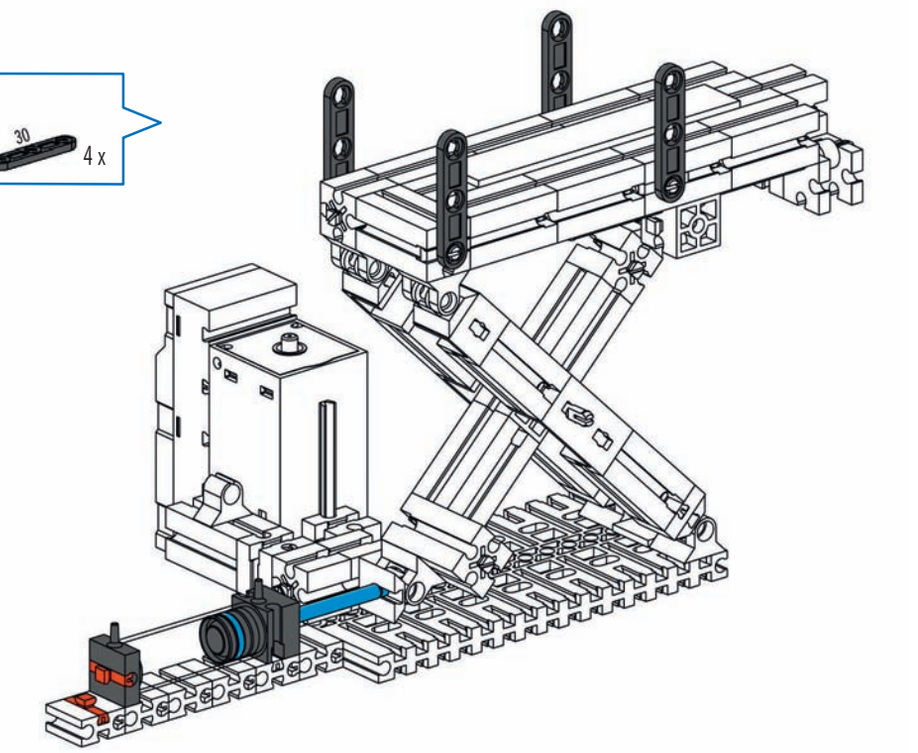

14

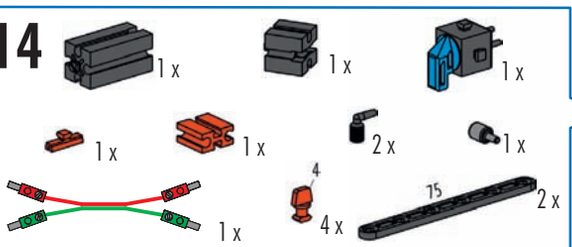

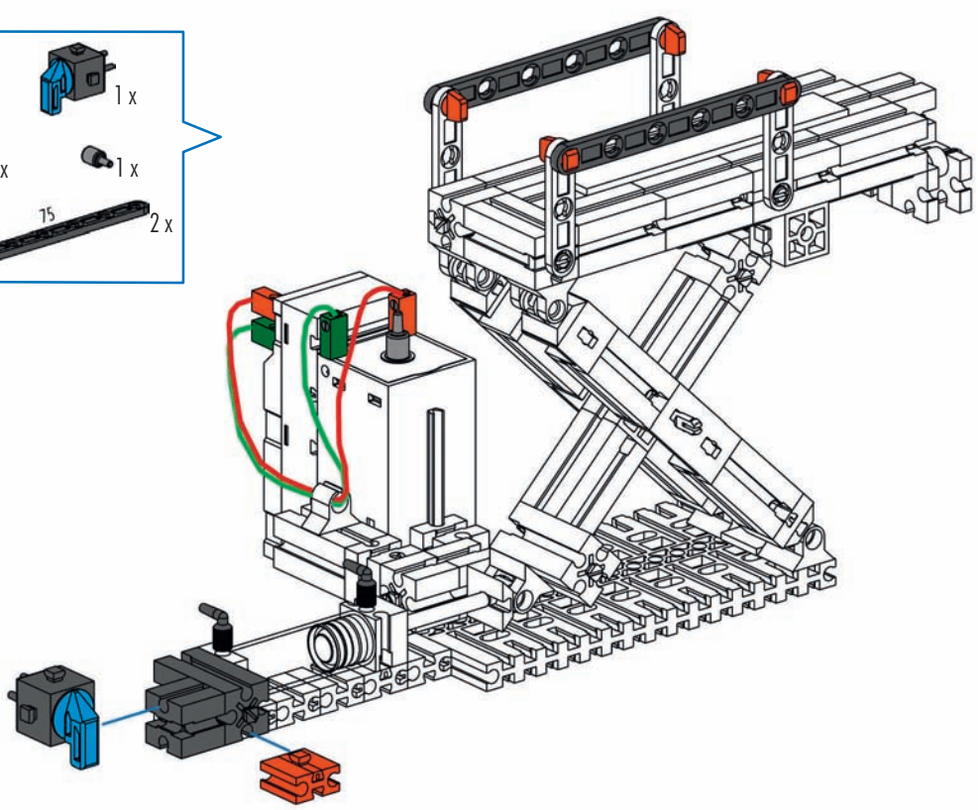

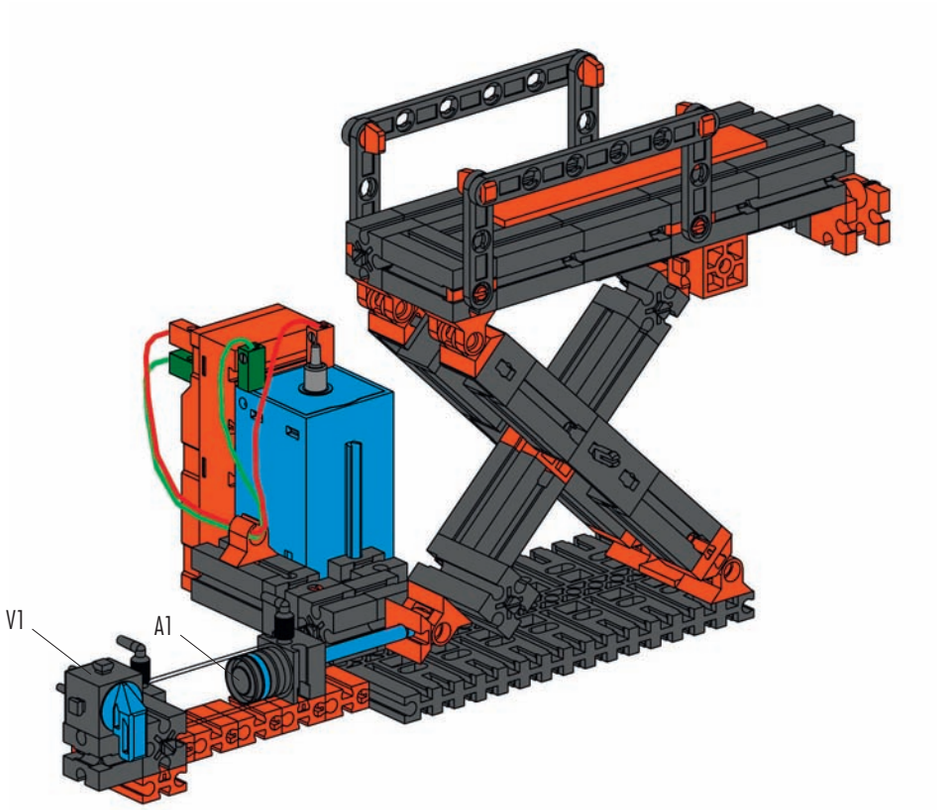

Schlauchanschlussplan
Air line layout plan
Plan de raccordement de conduits

Aansluitschema van slang
Racor de empalme
Plano de conexão de mangueira

Schema di allacciamento tubi
Схема подключения шлангов
软管连接图

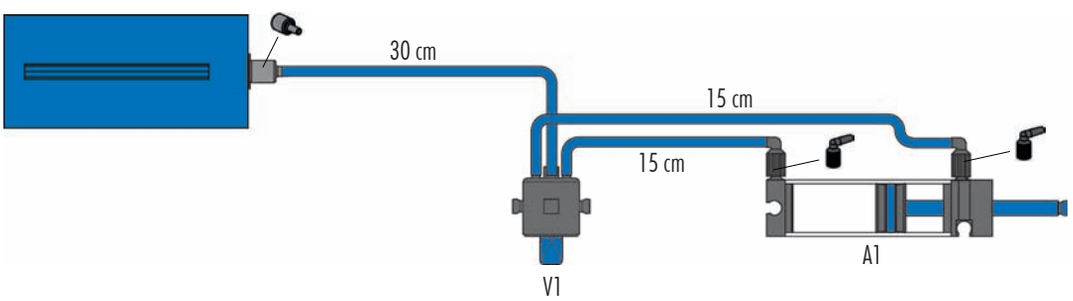

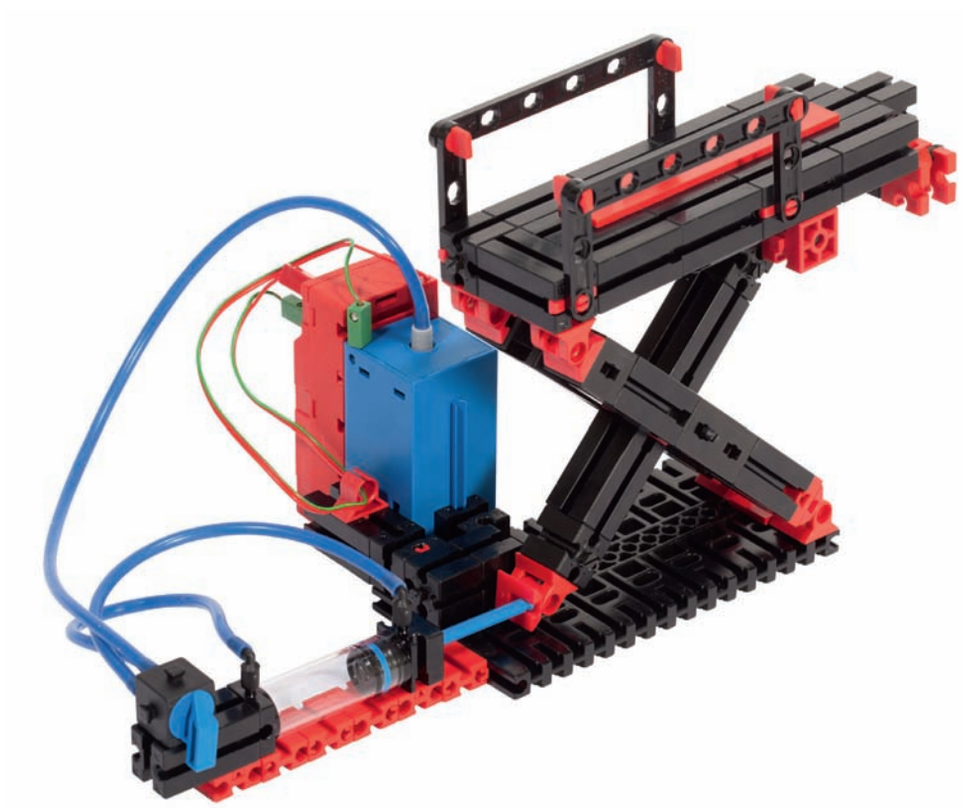

Versuch 2
Task 2
Exercice 2

Taak 2
Tarea 2
Tarefa 2

Prova 2
Опыт 2
试验 2

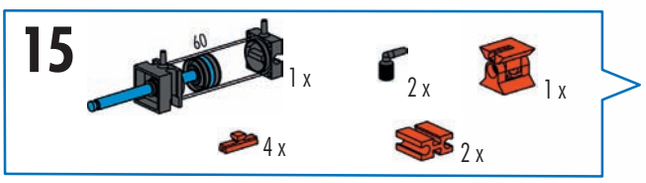

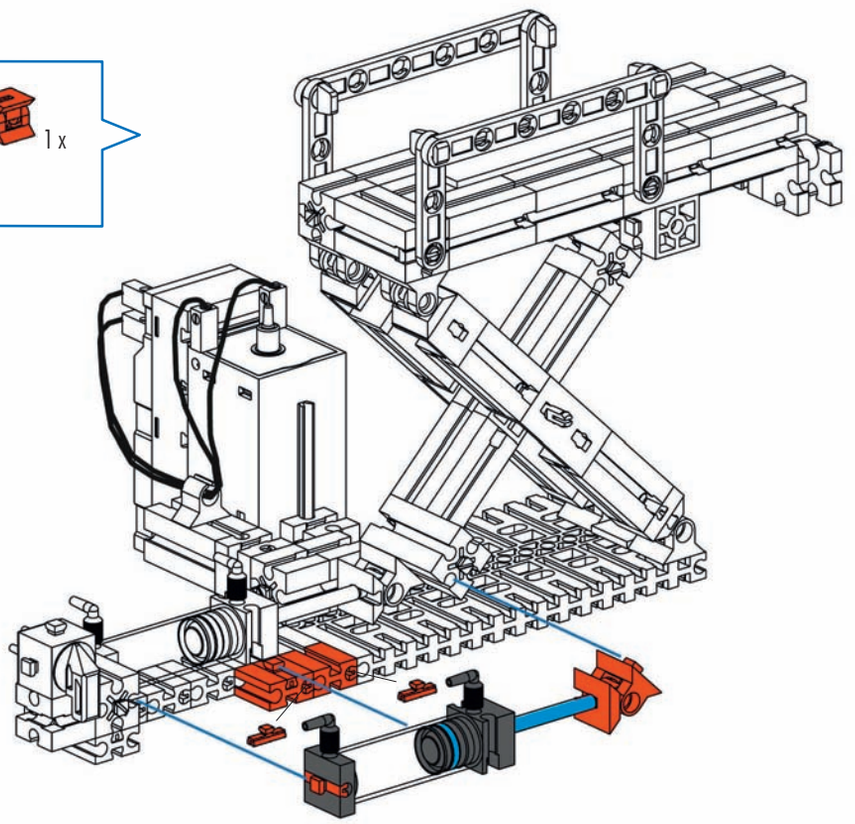

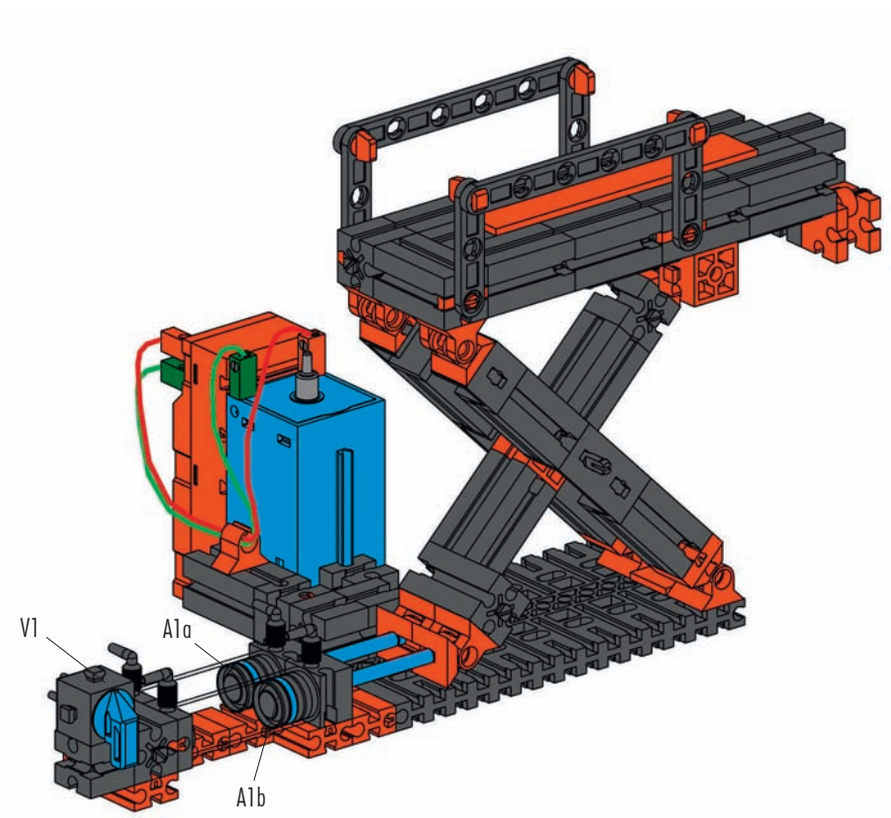

Schlauchanschlussplan
Air line layout plan
Plan de raccordement de conduits

Aansluitschema van slang
Racor de empalme
Plano de conexão de mangueira

Schema di allacciamento tubi
Схема подключения шлангов
软管连接图

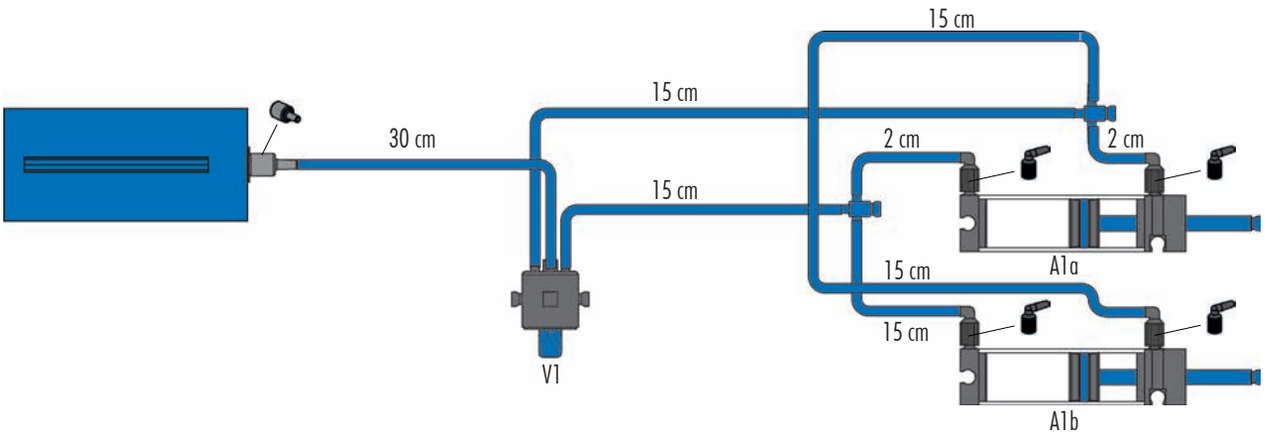

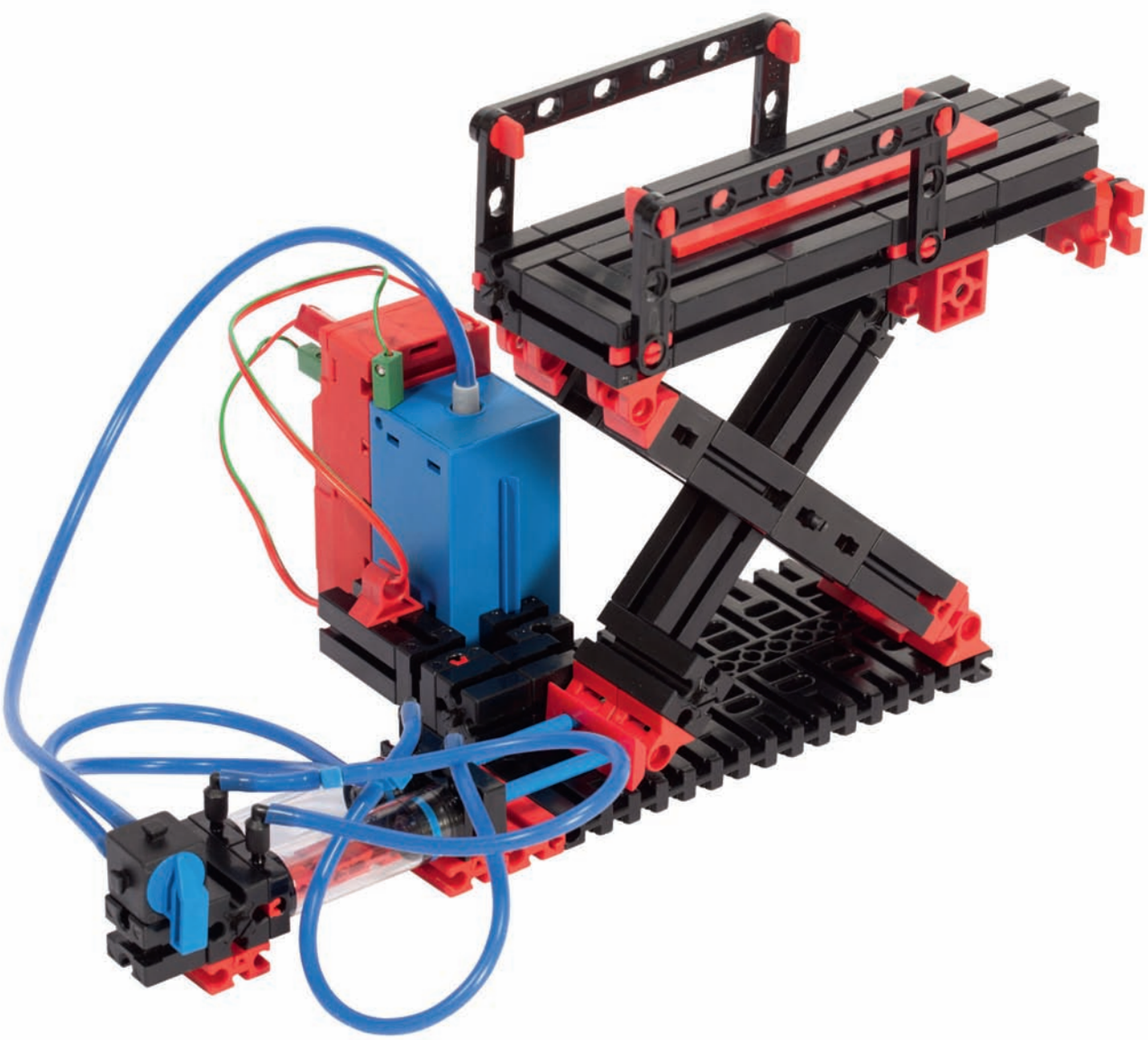

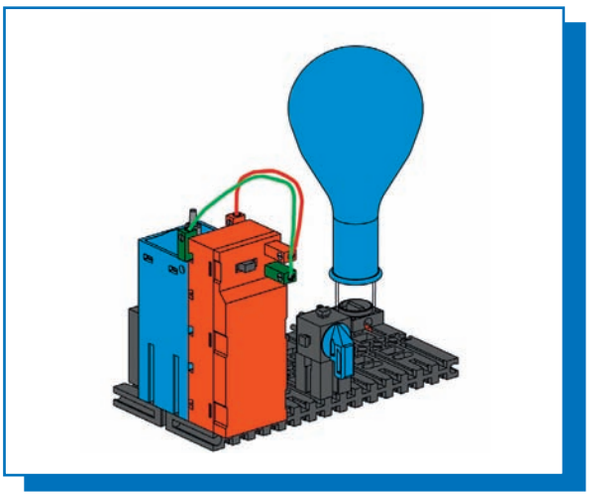

Luftballonpumbe
Balloon pump
Pompe à ballons

Luchtballonpomp
Bomba para globos
Bomba para balão de ar

Pompa per palloncini
Насос для воздушных шариков
气球打气泵

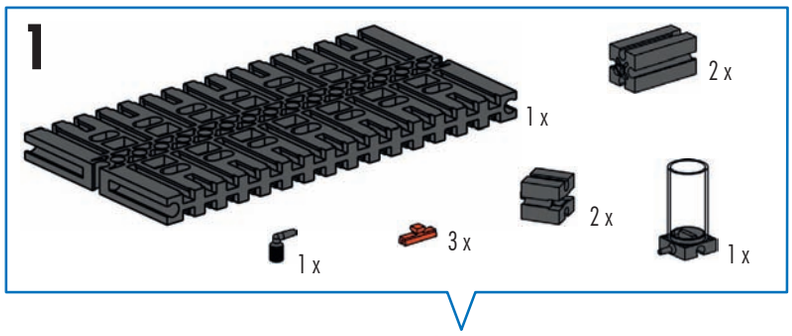

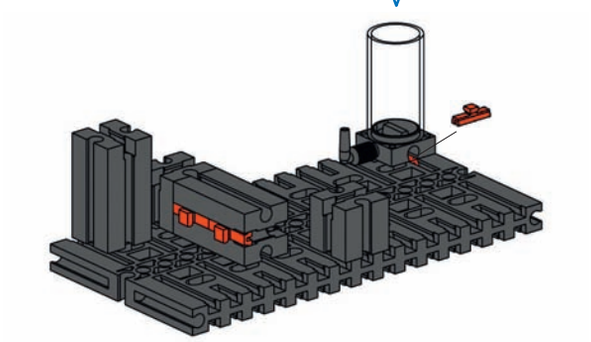

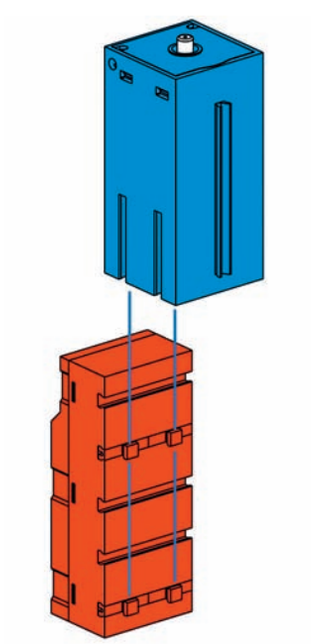

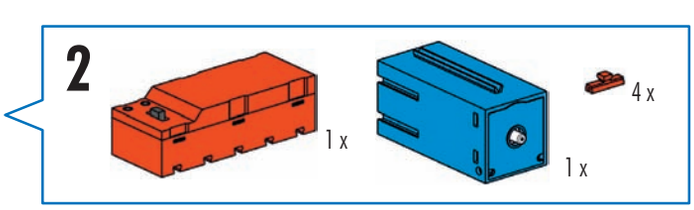

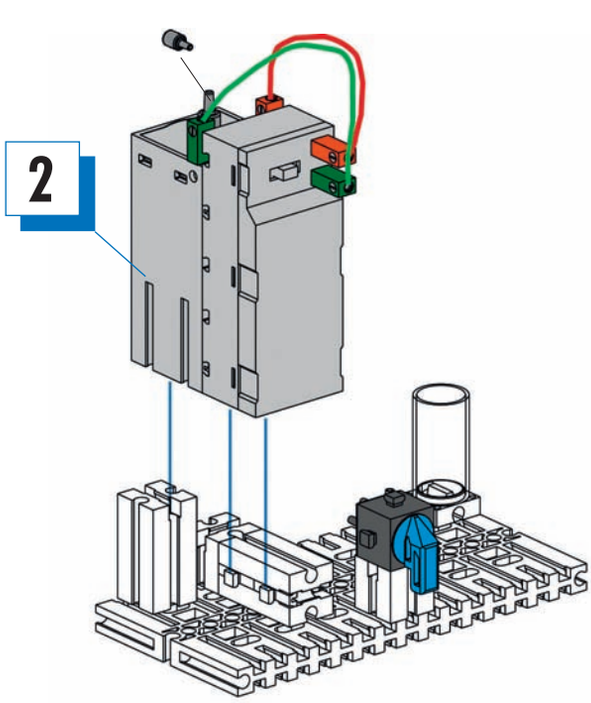

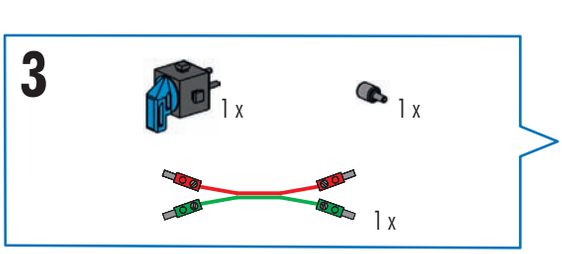

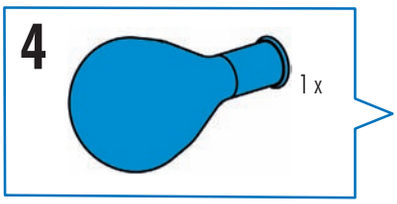

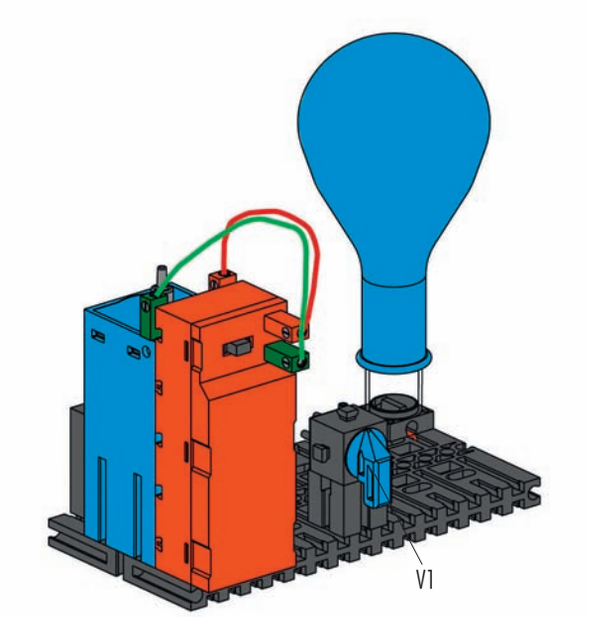

Schlauchanschlussplan
Air line layout plan
Plan de raccordement de conduits

Aansluitschema van slang
Racor de empalme
Plano de conexão de mangueira

Schema di allacciamento tubi
Схема подключения шлангов
软管连接图

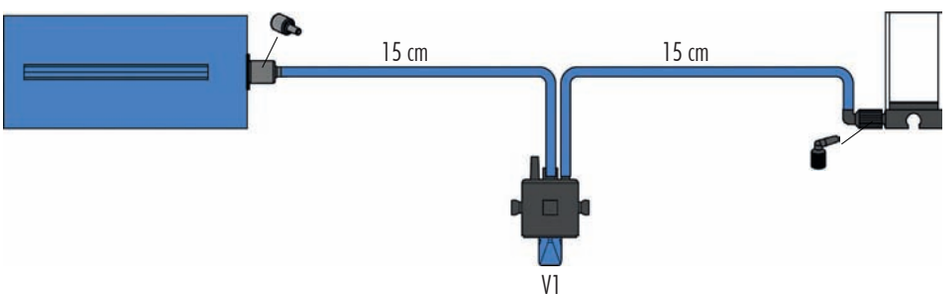

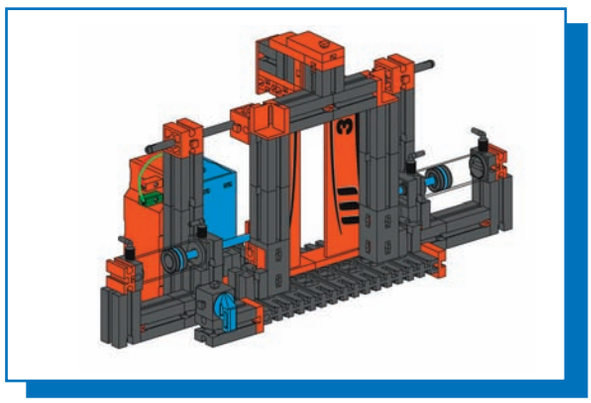

Doppelschiebetür
Double sliding doors
Double porte coulissante
Dubbele schuifdeur
Puerta corrediza doble
Porta de corrediça dupla
Doppia porta scorrevole
Двойная сдвижная дверь
双滑动门

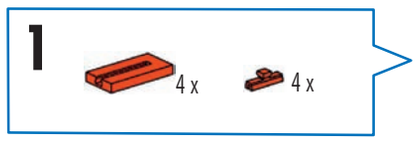

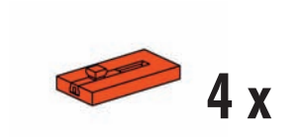

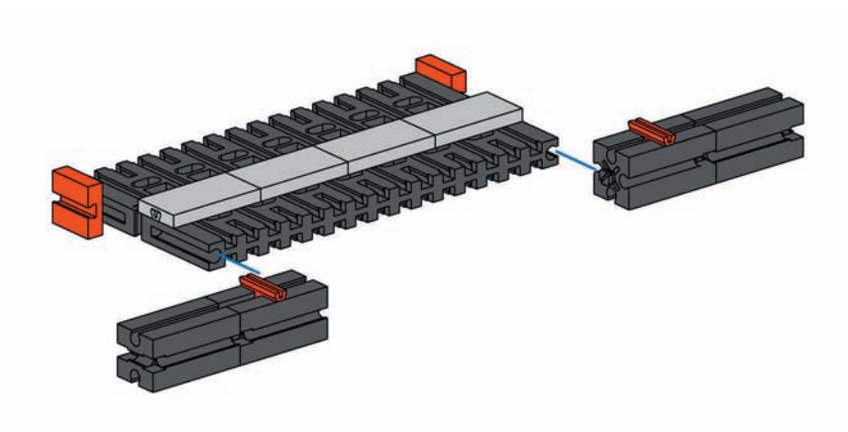

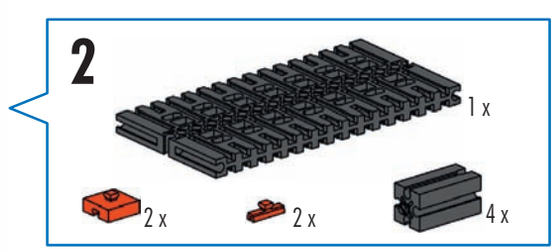

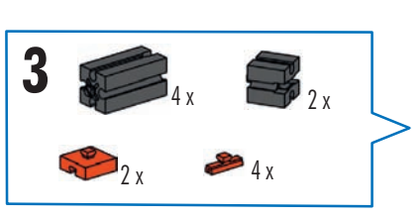

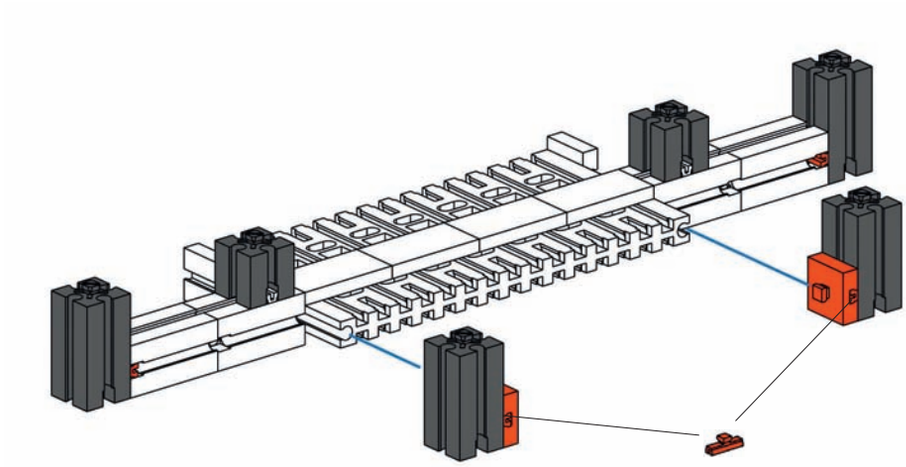

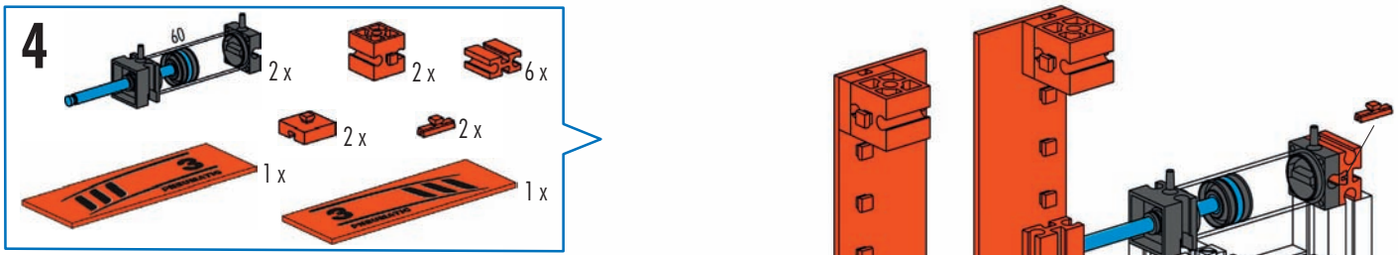
4
60
2 x
2 x
6 x
2 x
2 x
1 x
1 x

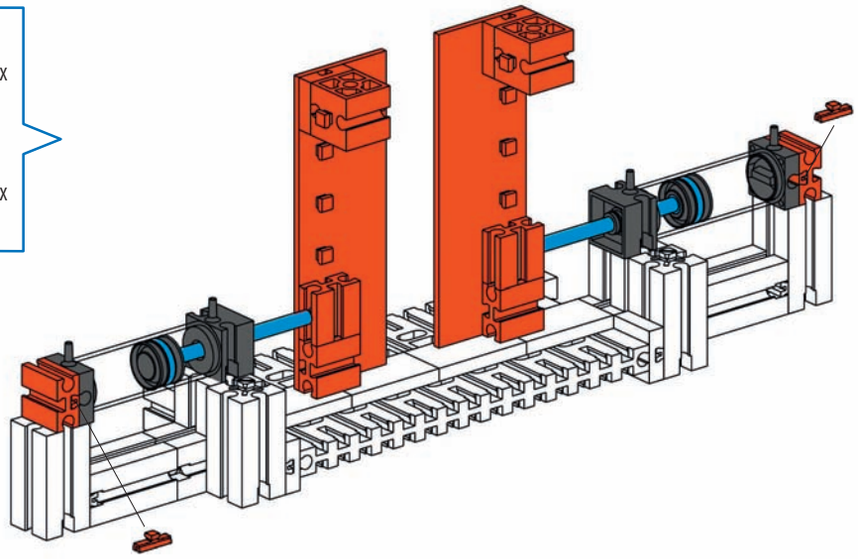

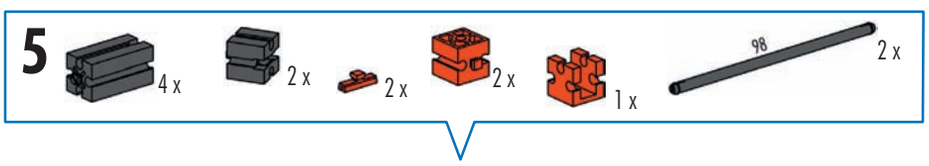
5
4 x
2 x
2 x
2 x
1 x
98
2 x

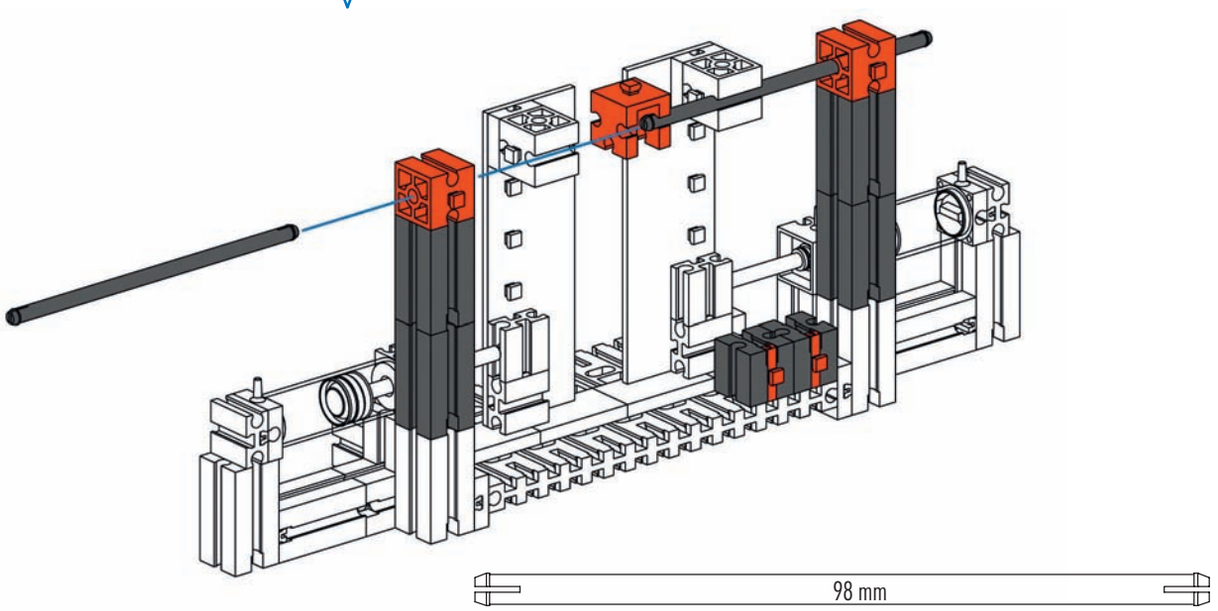
98 mm

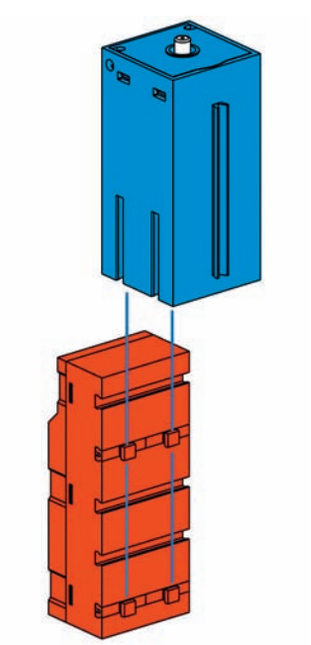

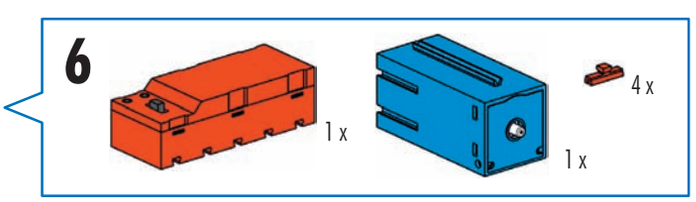
6
1 x
1 x
4 x

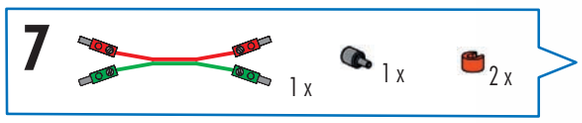
7
1 x
1 x
2 x

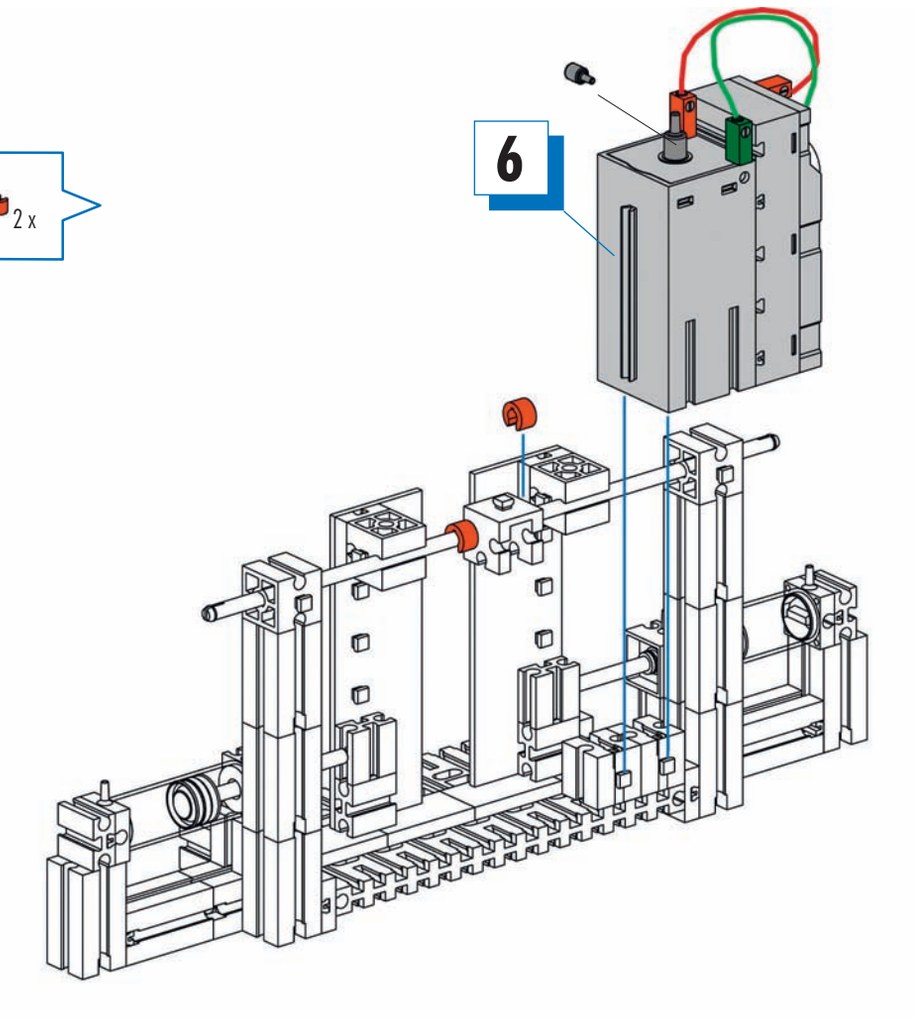
6

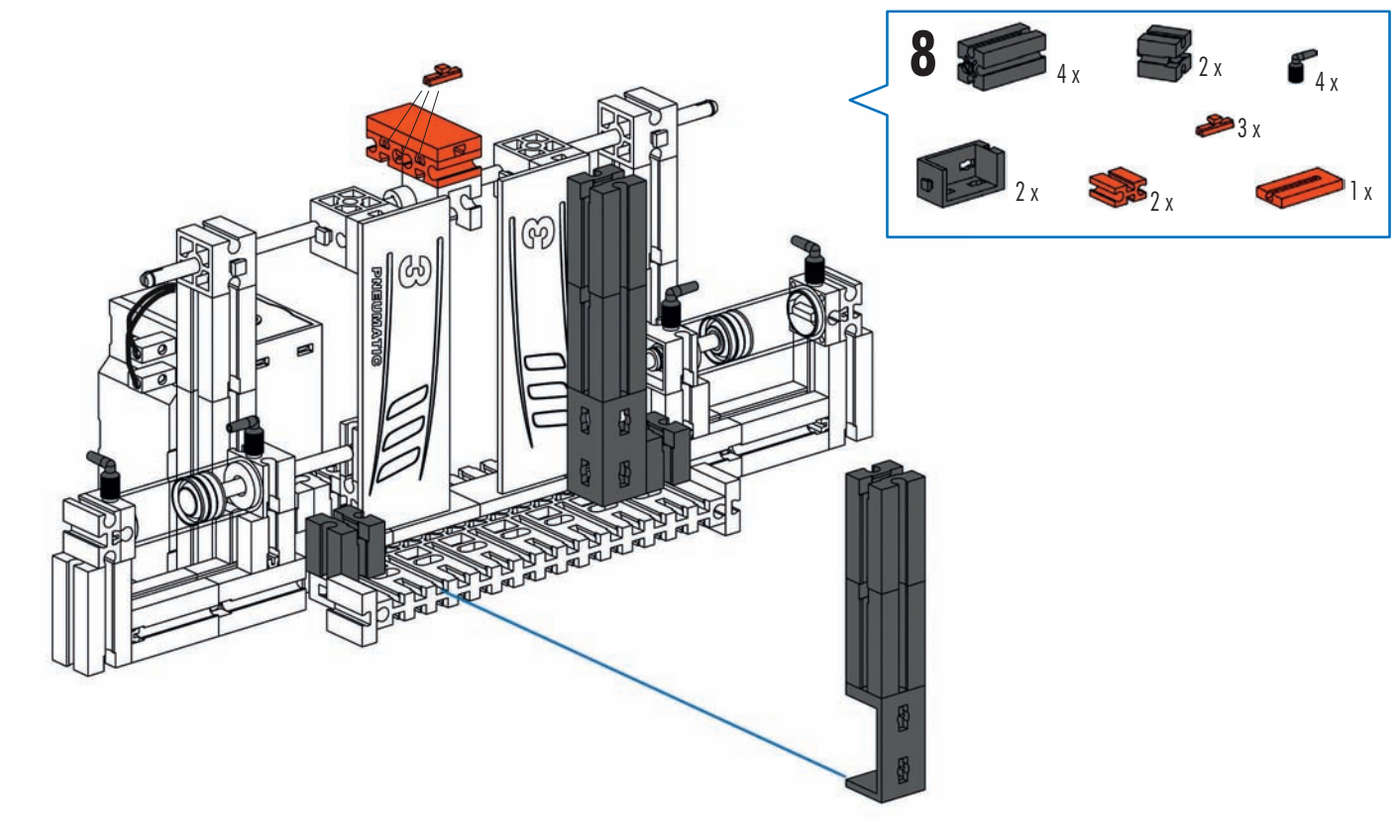
8
4 x
2 x
4 x
3 x
2 x
2 x
1 x

9

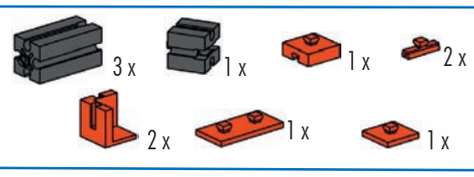

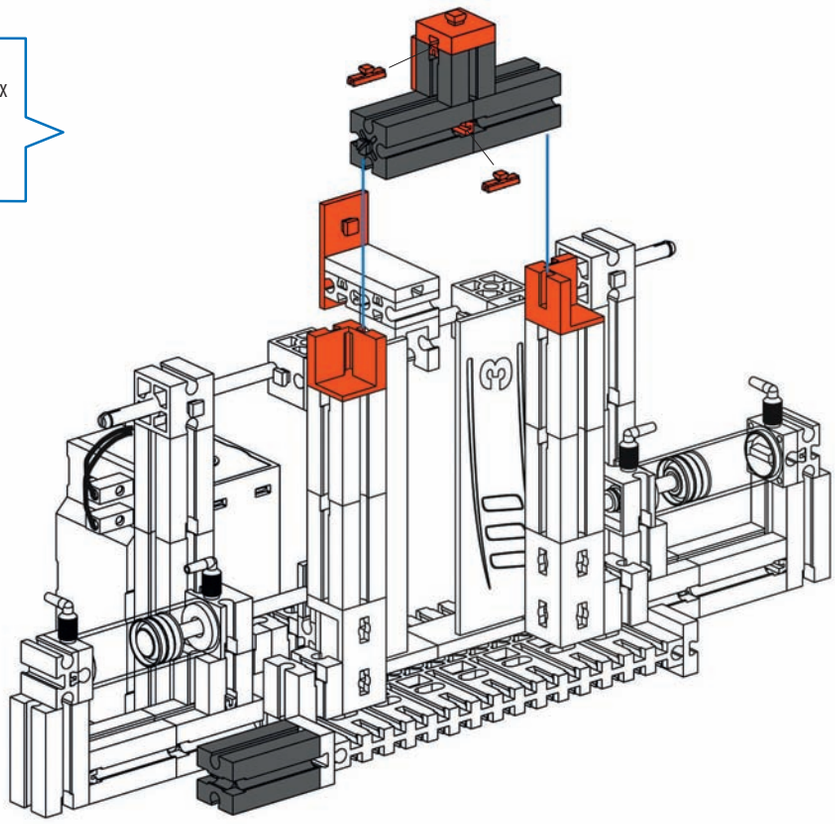

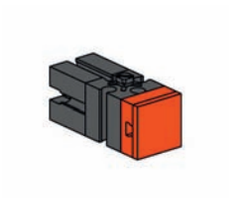

10

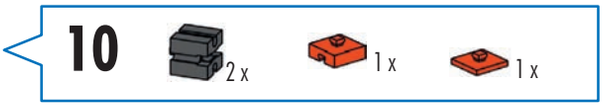

11

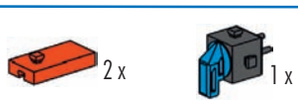

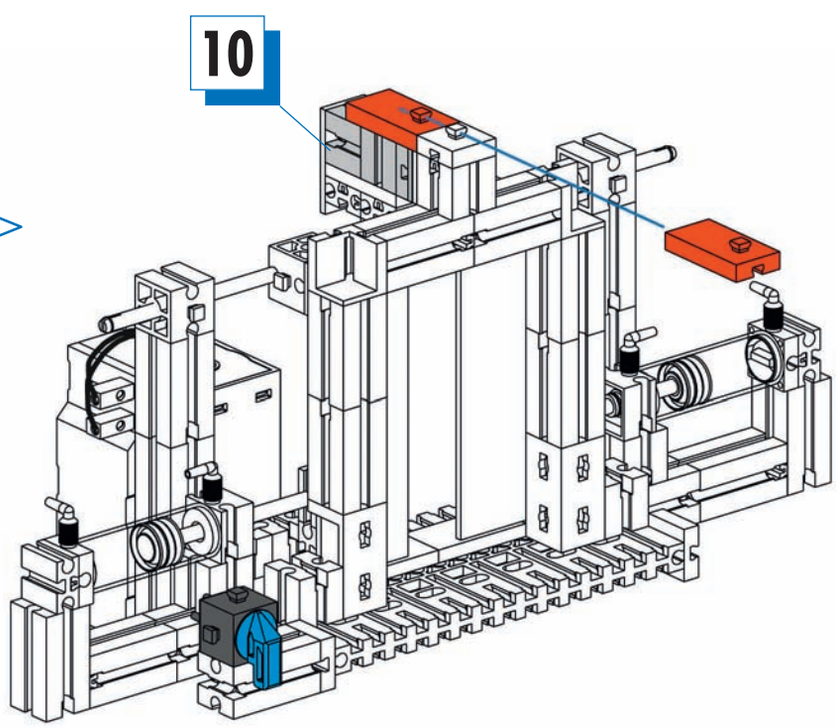

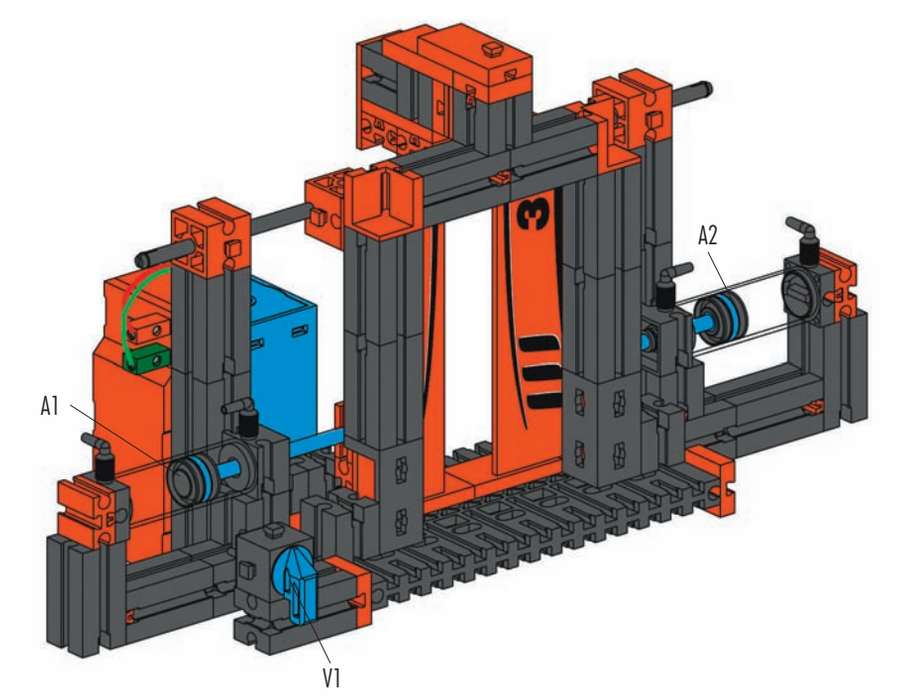

Schlauchanschlussplan
Air line layout plan
Plan de raccordement de conduits

Aansluitschema van slang
Racor de empalme
Plano de conexão de mangueira

Schema di allacciamento tubi
Схема подключения шлангов
软管连接图

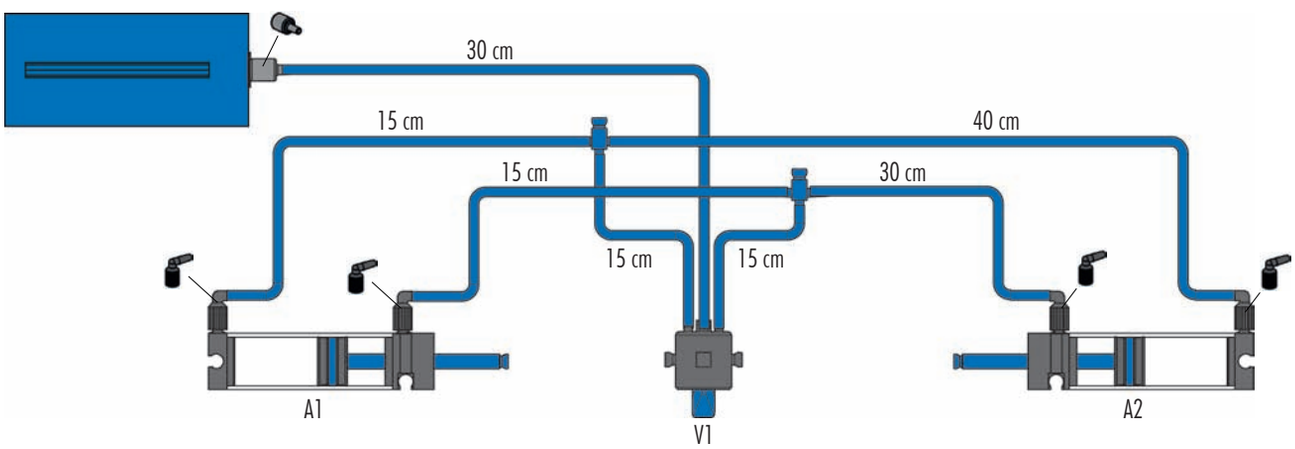

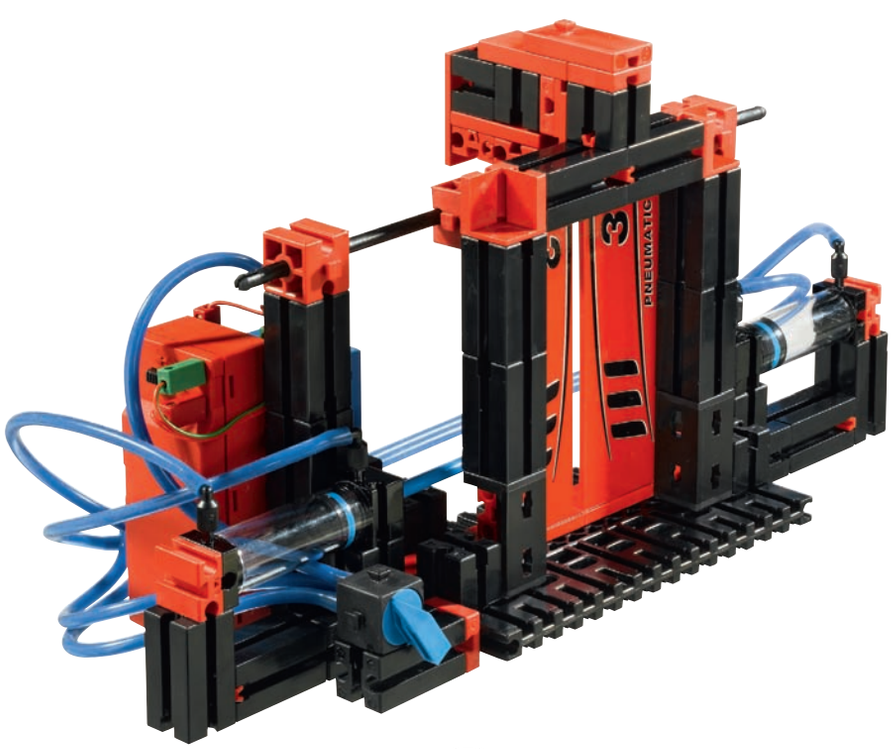

373

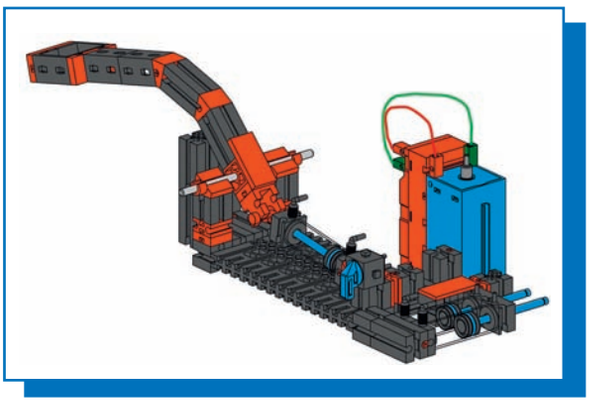

Katapult
Catapult
Catapulte

Katapult
Catapulta
Catapulta

Catapulta
Катапульта
弹射器

Versuch 1
Task 1
Exercice 1

Taak 1
Tarea 1
Tarefa 1

Prova 1
Опыт 1
试验 1

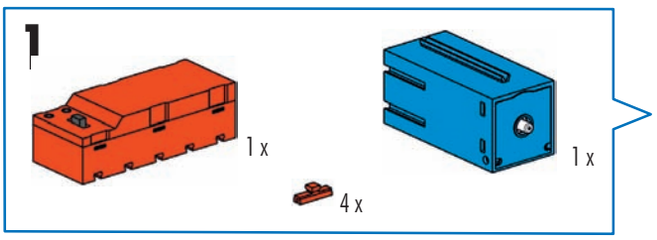

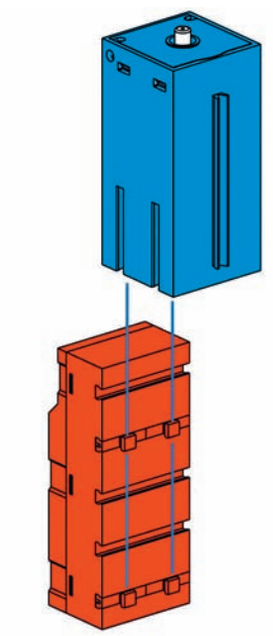

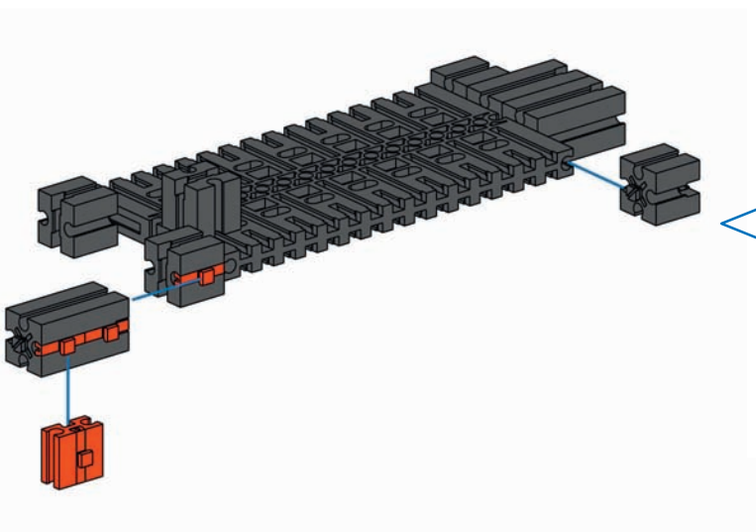

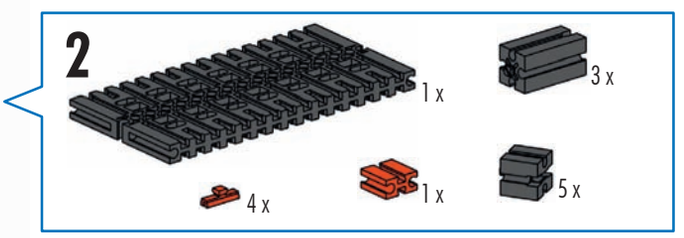

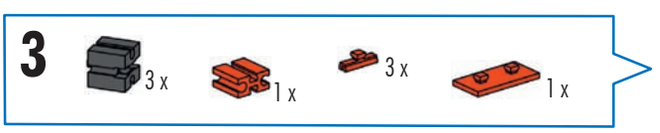

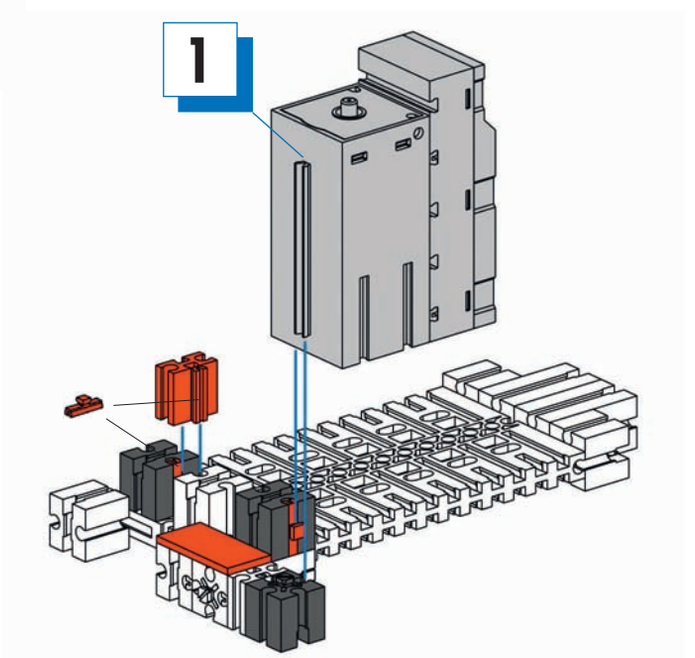

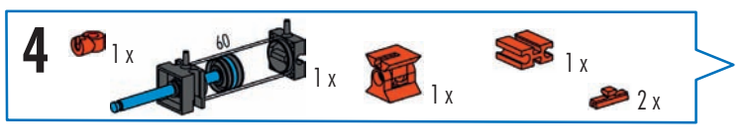
4
1 x
60
1 x
1 x
1 x
2 x

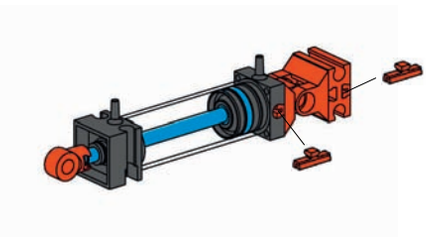

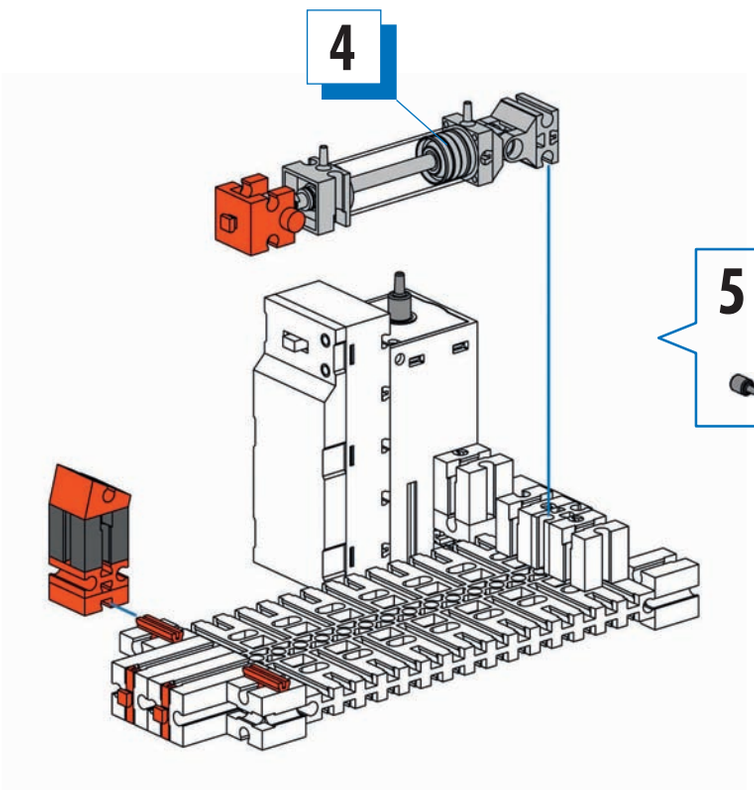
4

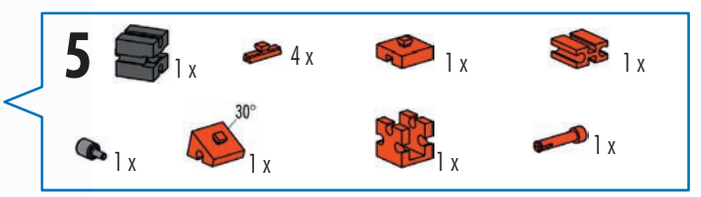
5
1 x
4 x
1 x
1 x
1 x
30°
1 x
1 x
1 x

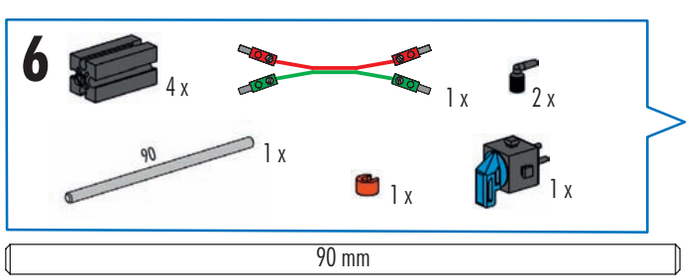
6
4 x
1 x
2 x
90
1 x
1 x
1 x
90 mm

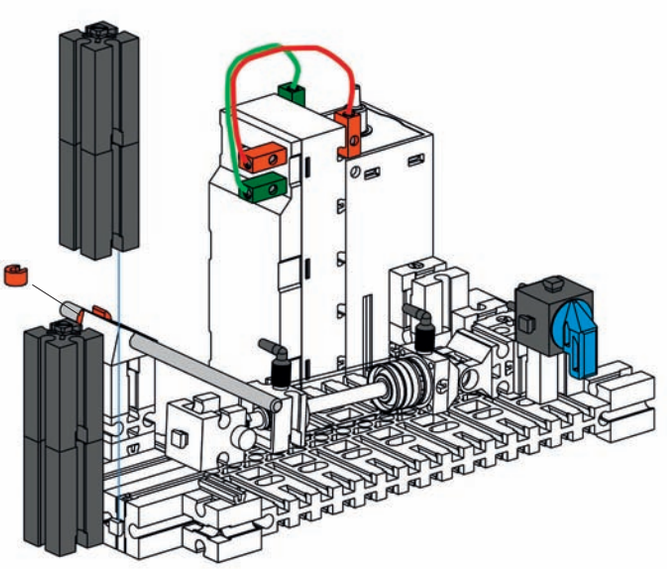

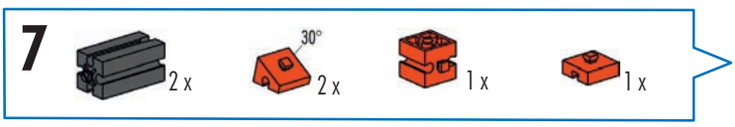
7
2 x
30°
2 x
1 x
1 x

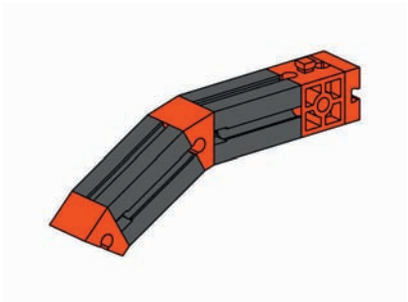

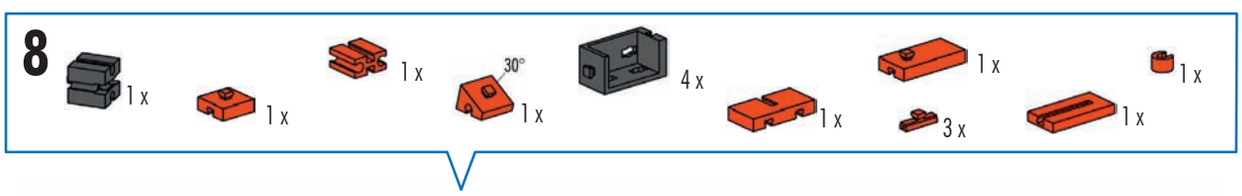
8
1 x
1 x
1 x
30°
1 x
4 x
1 x
1 x
3 x
1 x
1 x

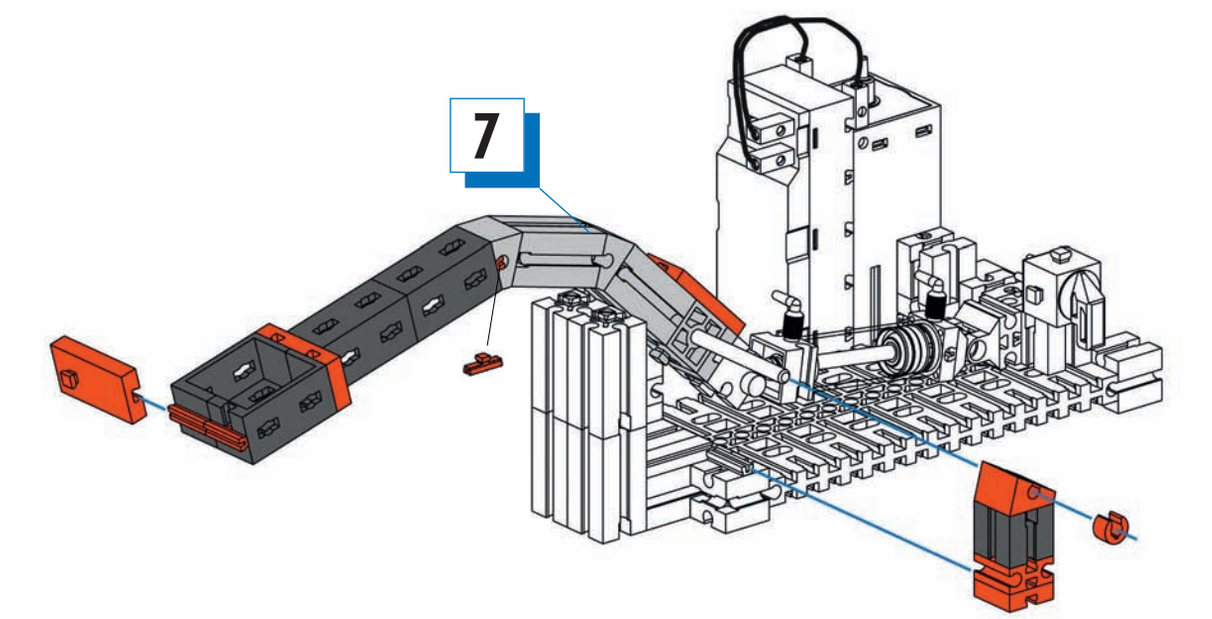
7

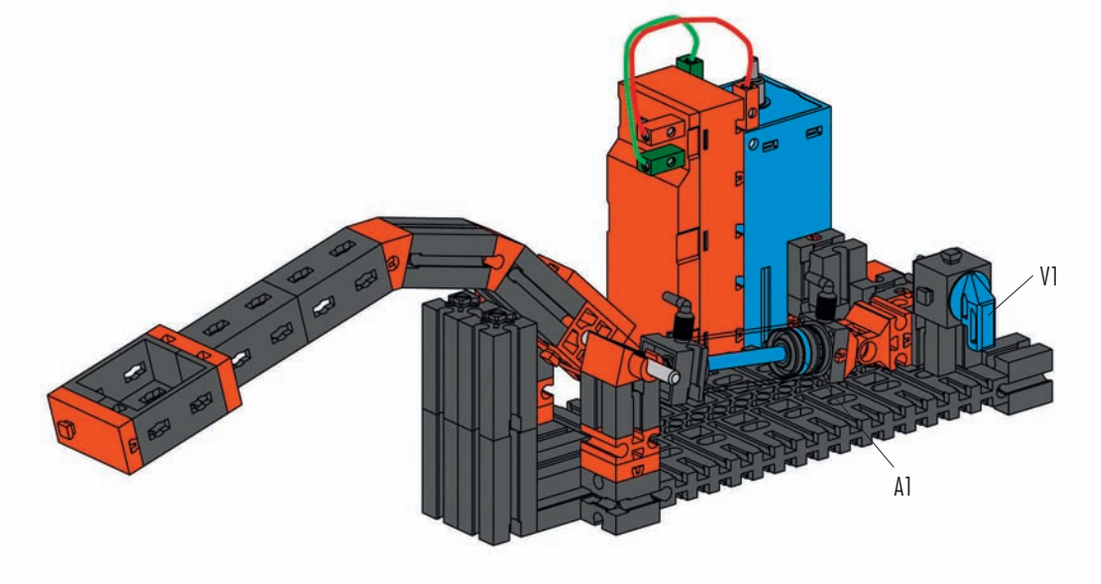

Schlauchanschlussplan
Air line layout plan
Plan de raccordement de conduits

Aansluitschema van slang
Racor de empalme
Plano de conexão de mangueira

Schema di allacciamento tubi
Схема подключения шлангов
软管连接图

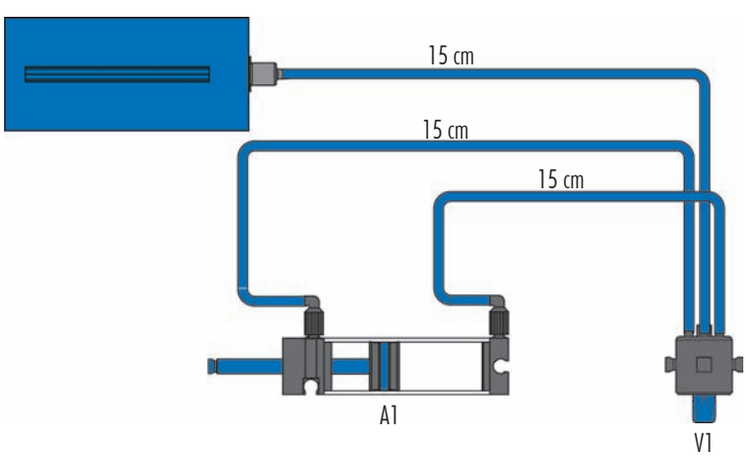

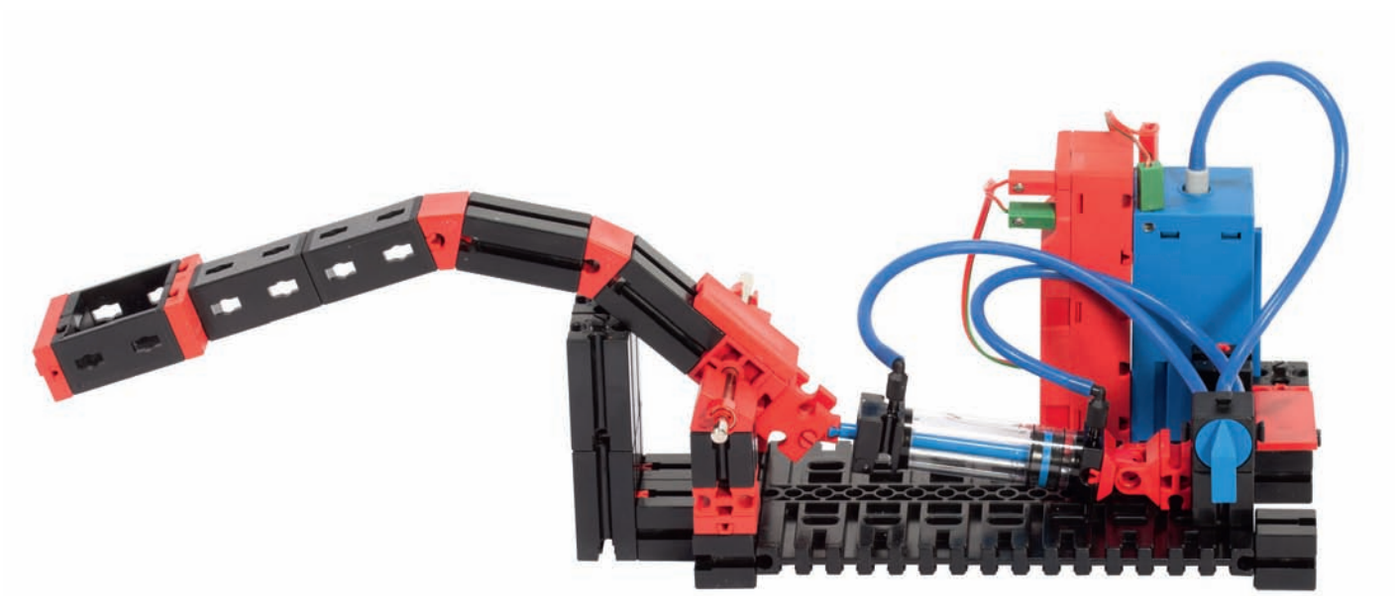

Versuch 2
Task 2
Exercice 2

Taak 2
Tarea 2
Tarefa 2

Prova 2
Опыт 2
试验 2

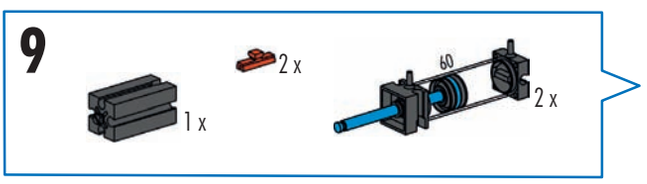

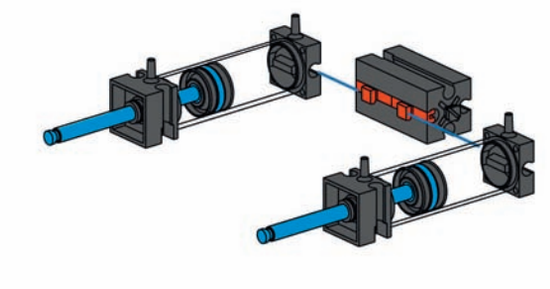

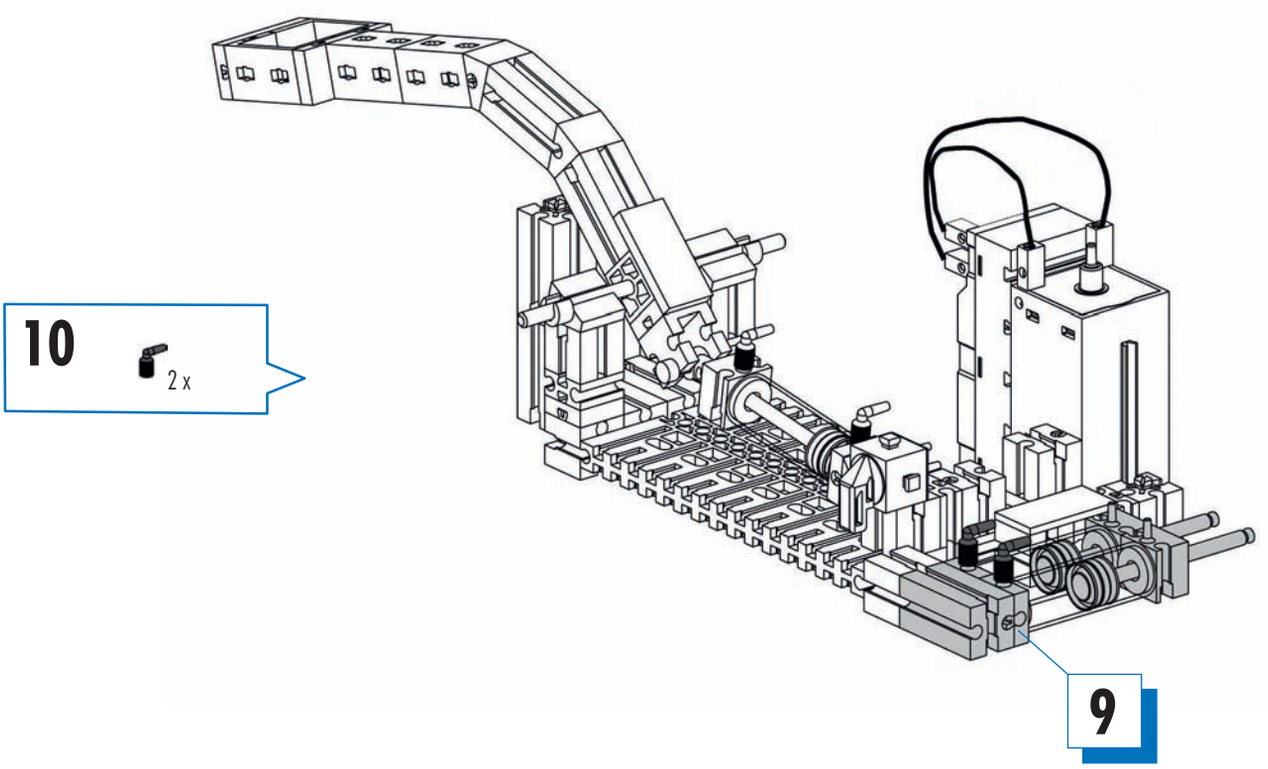

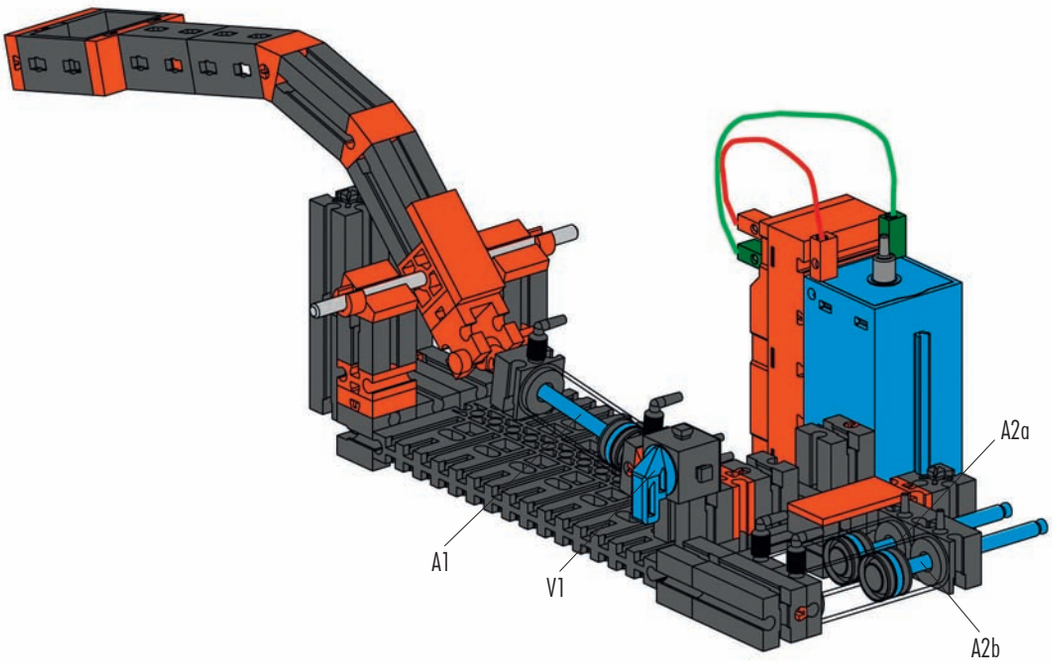

Schlauchanschlussplan
Air line layout plan
Plan de raccordement de conduits

Aansluitschema van slang
Racor de empalme
Plano de conexão de mangueira

Schema di allacciamento tubi
Схема подключения шлангов
软管连接图

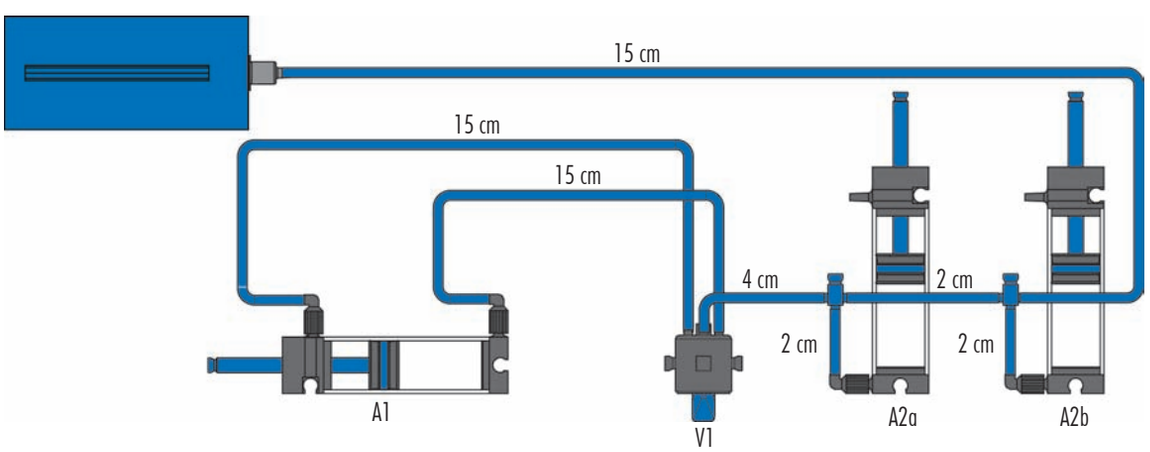

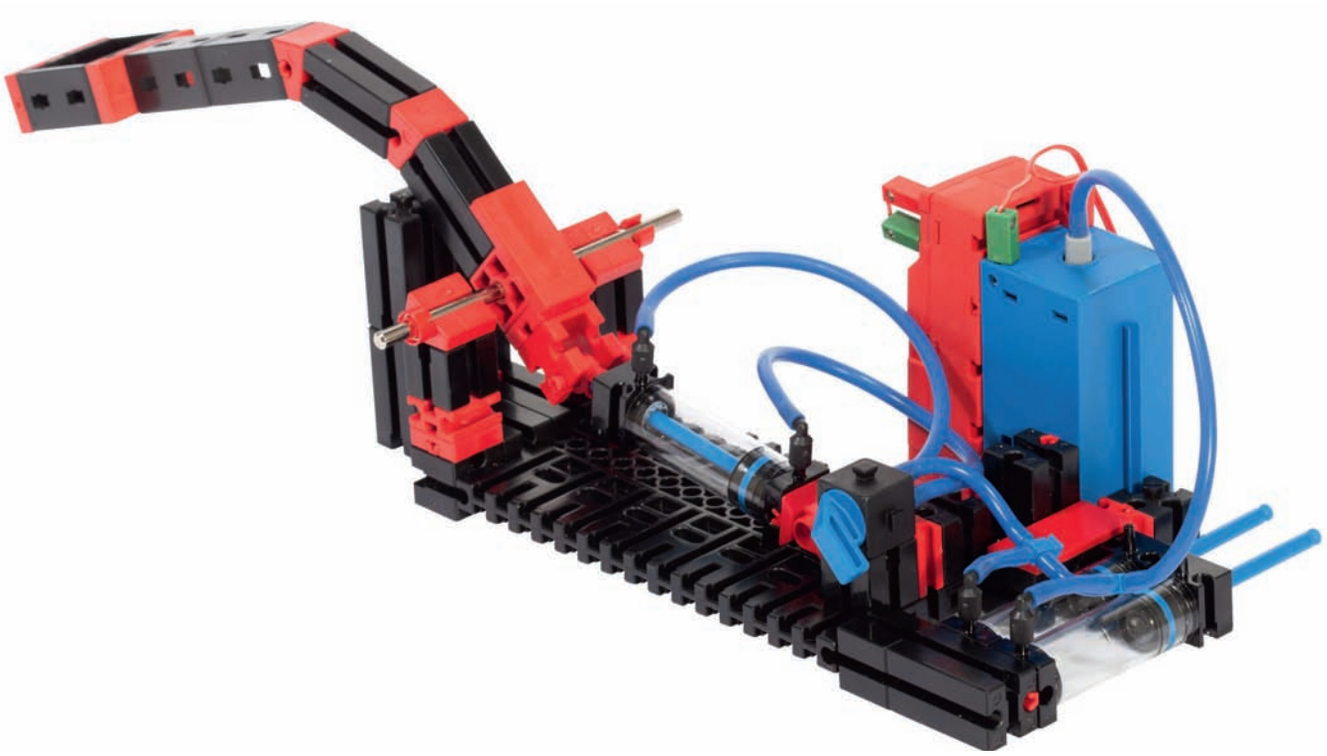

Basismodell
Basic model
Maquette de base
Basismodel
Modelo básico
Modelo básico
Modello base
Базовая модель
基础标准型

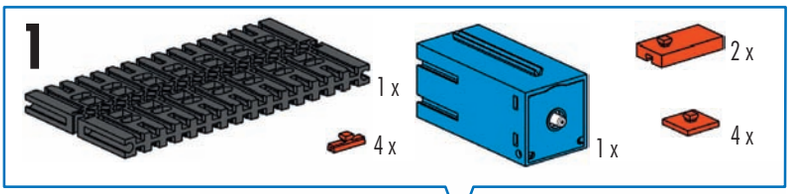

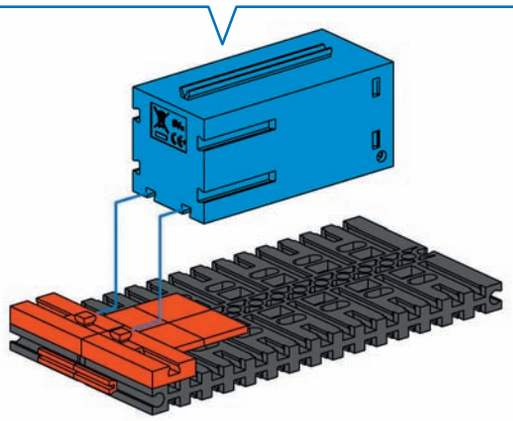

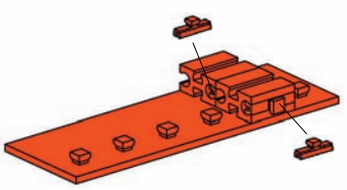

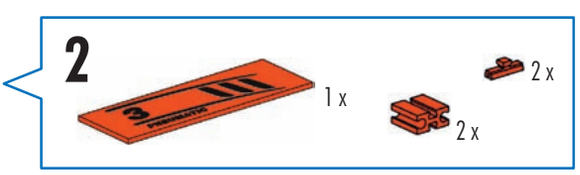

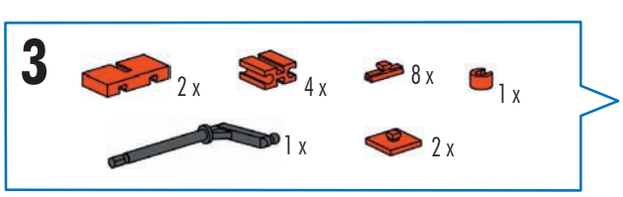

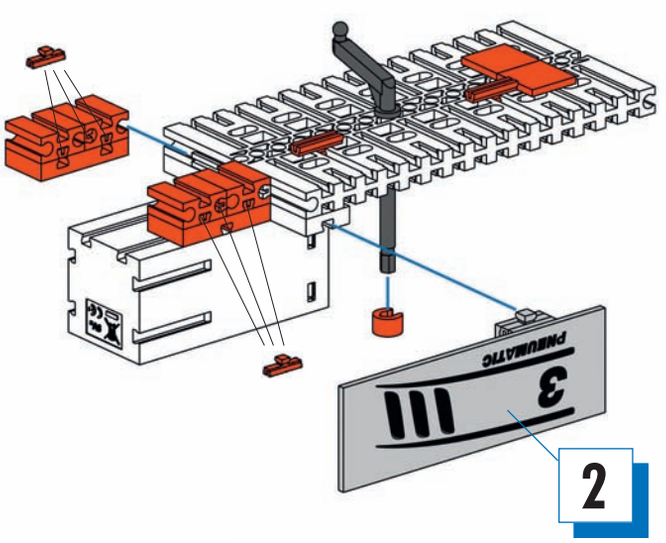

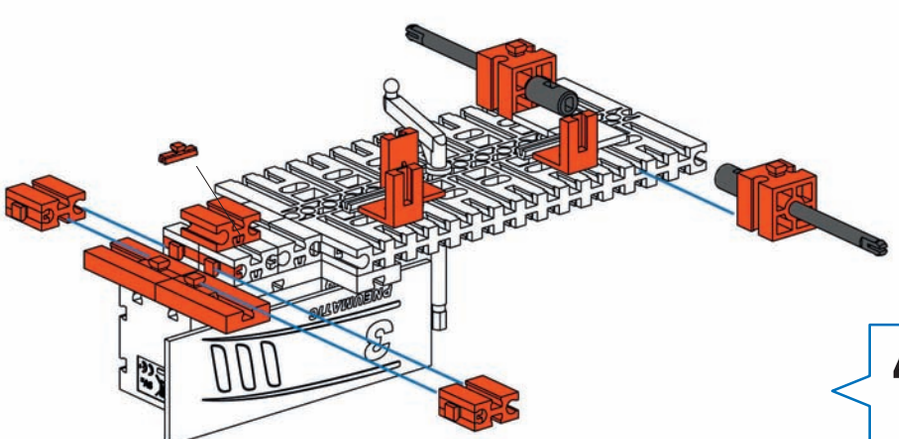

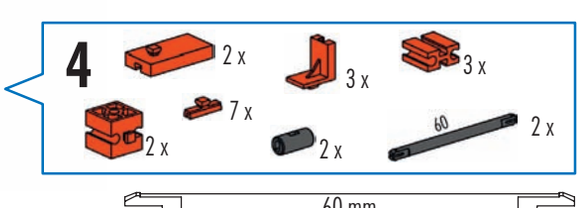

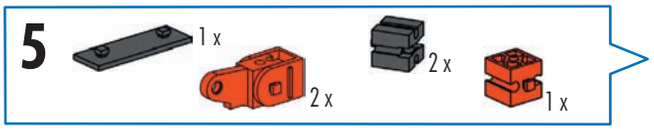
5
1 x
2 x
2 x
1 x

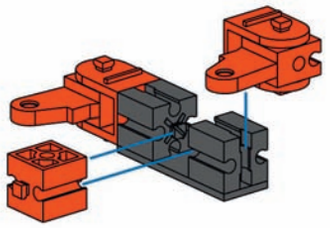

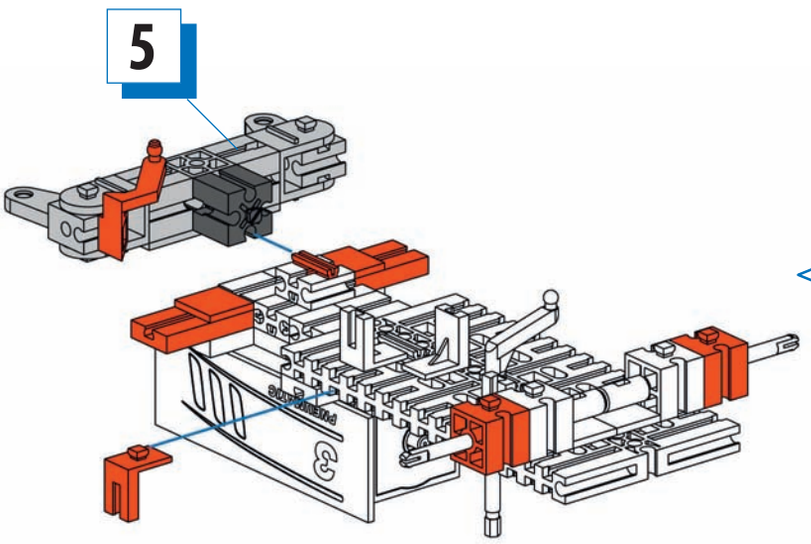
5

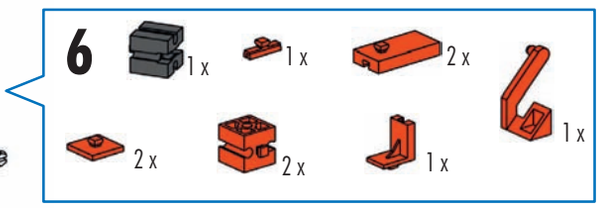
6
1 x
1 x
2 x
1 x
2 x
2 x
1 x

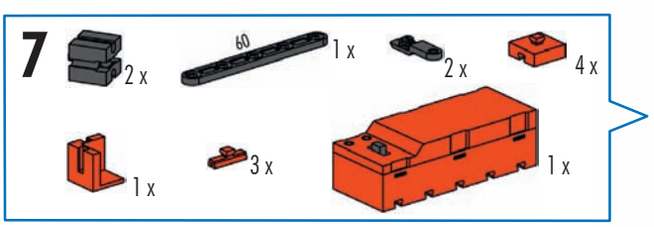
7
2 x
60
1 x
2 x
4 x
1 x
3 x
1 x

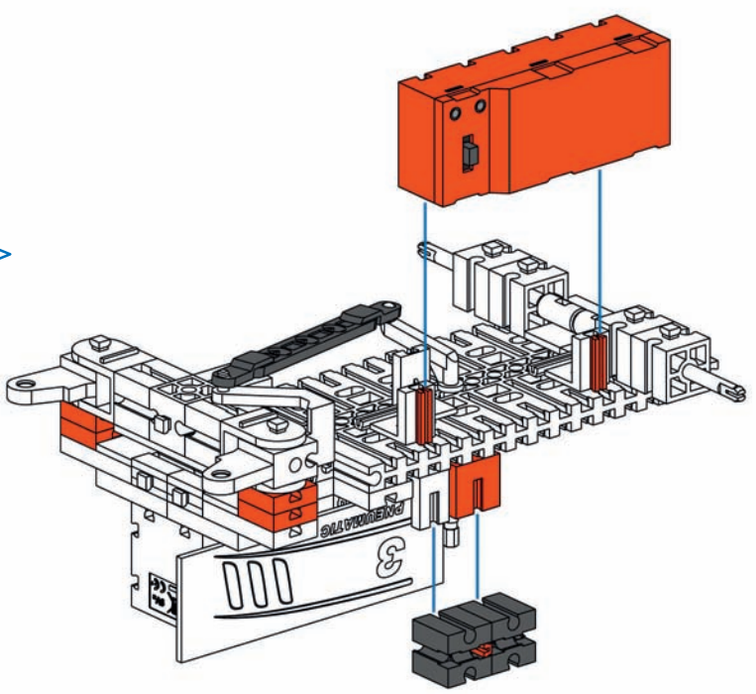

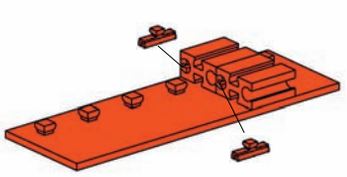

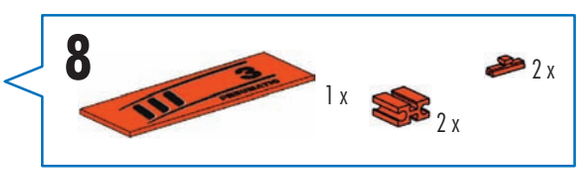
8
1 x
2 x
2 x

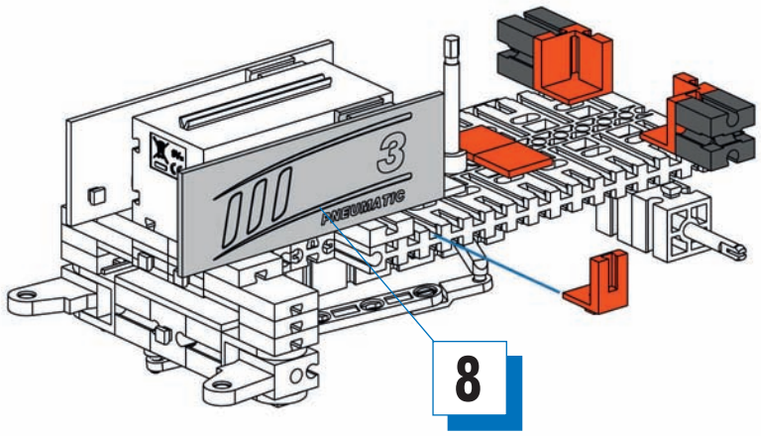

8

9 2 x 2 x 2 x 1 x

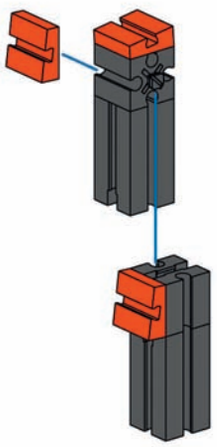

10 2 x 2 x 7,5° 3 x

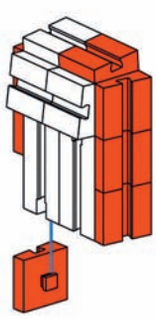

11 7,5° 7 x

12 2 x 2 x 1 x 2 x

11

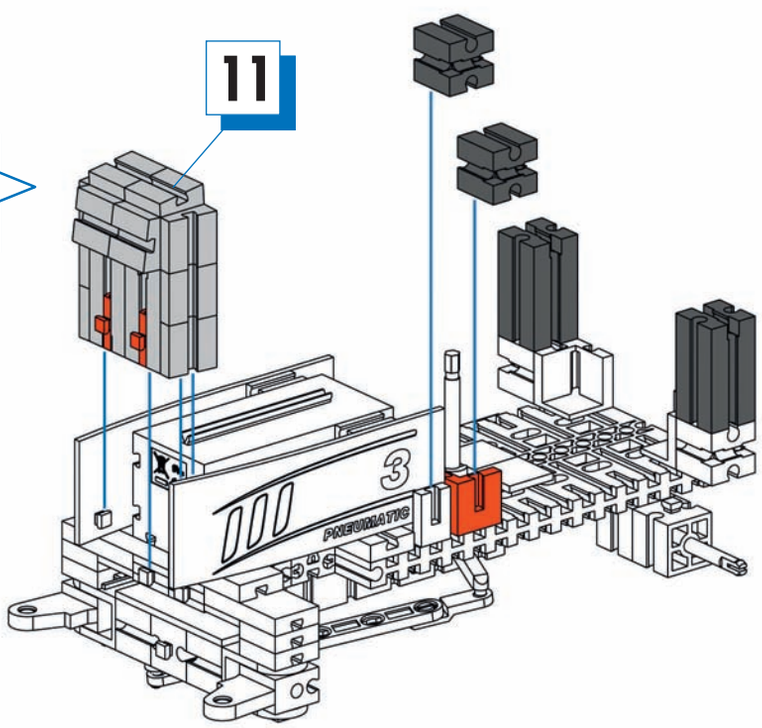

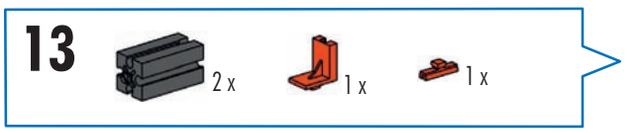
13
2 x
1 x
1 x

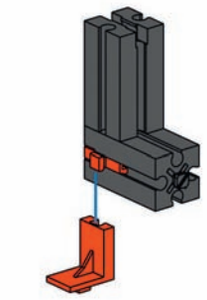

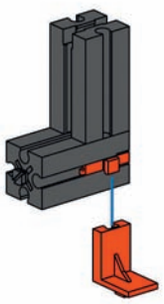

14
2 x
1 x
1 x

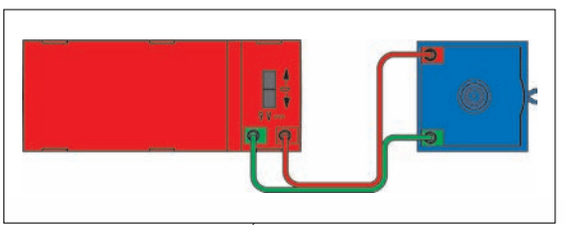

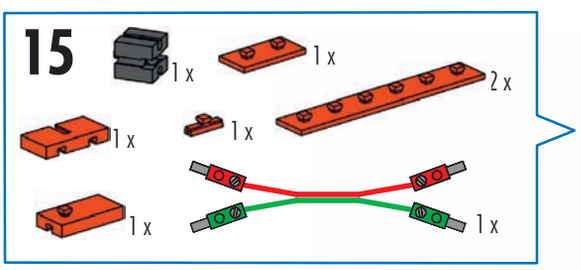
15
1 x
1 x
2 x
1 x
1 x
1 x
1 x

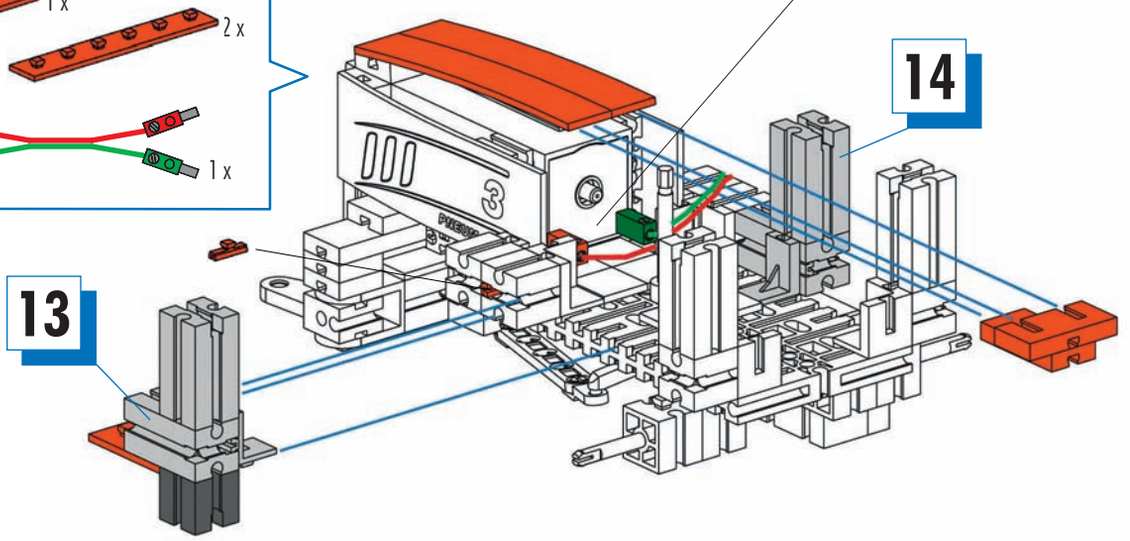
14
13

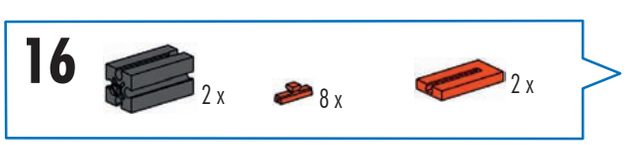
16
2 x
8 x
2 x

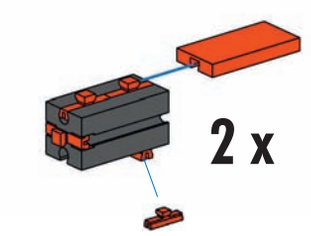
2 x

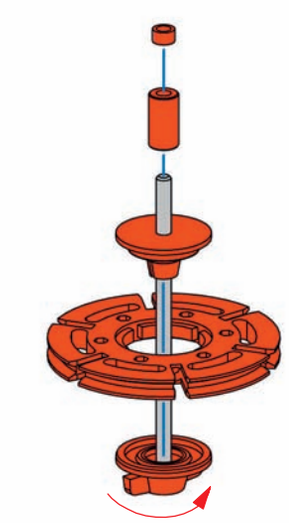

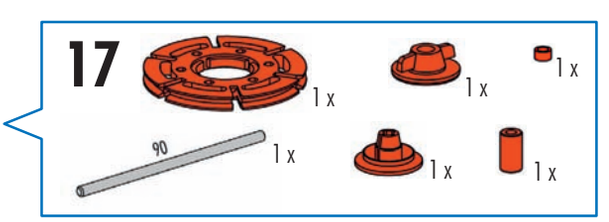
17
1 x
1 x
1 x
90
1 x
1 x
1 x

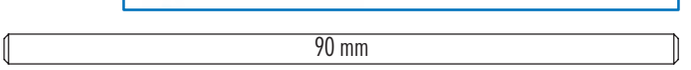
90 mm

383

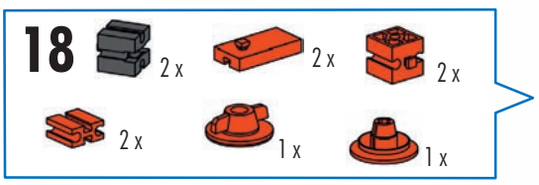
18
2 x
2 x
2 x
2 x
1 x
1 x

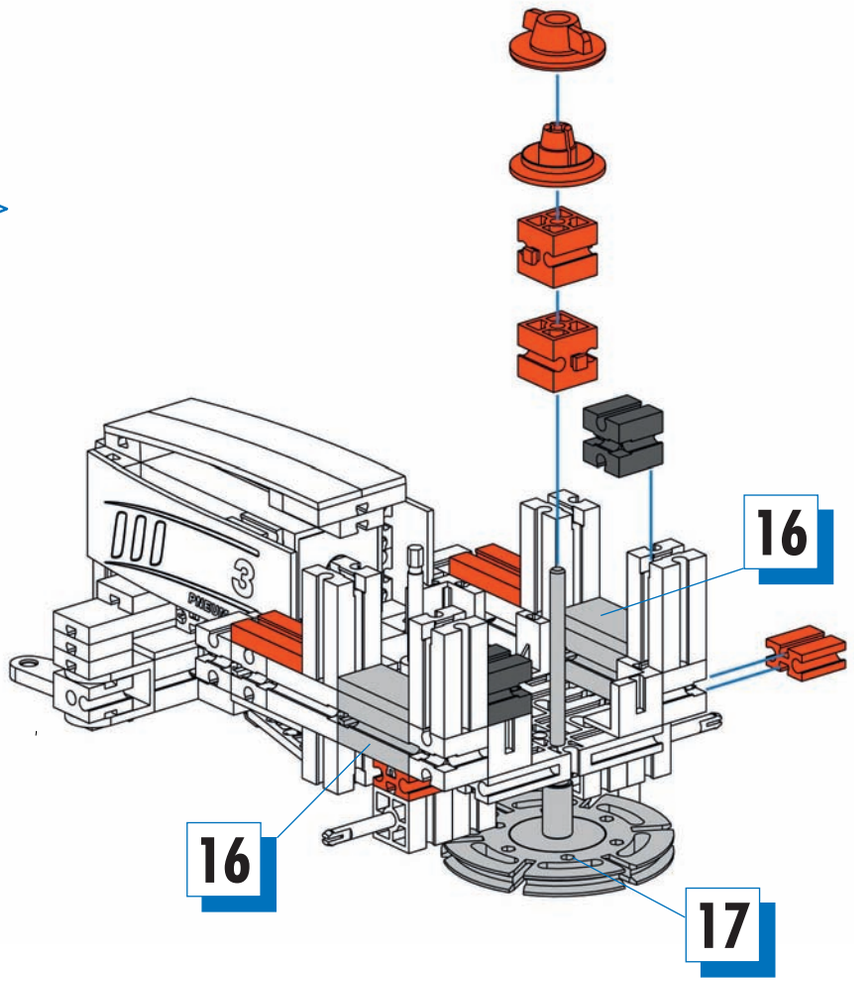
16
16
17

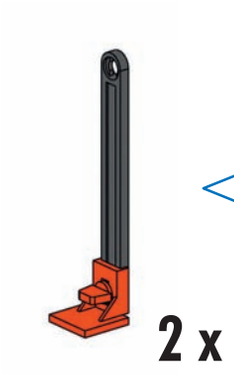
2 x

19
63,6
2 x
2 x
4
2 x

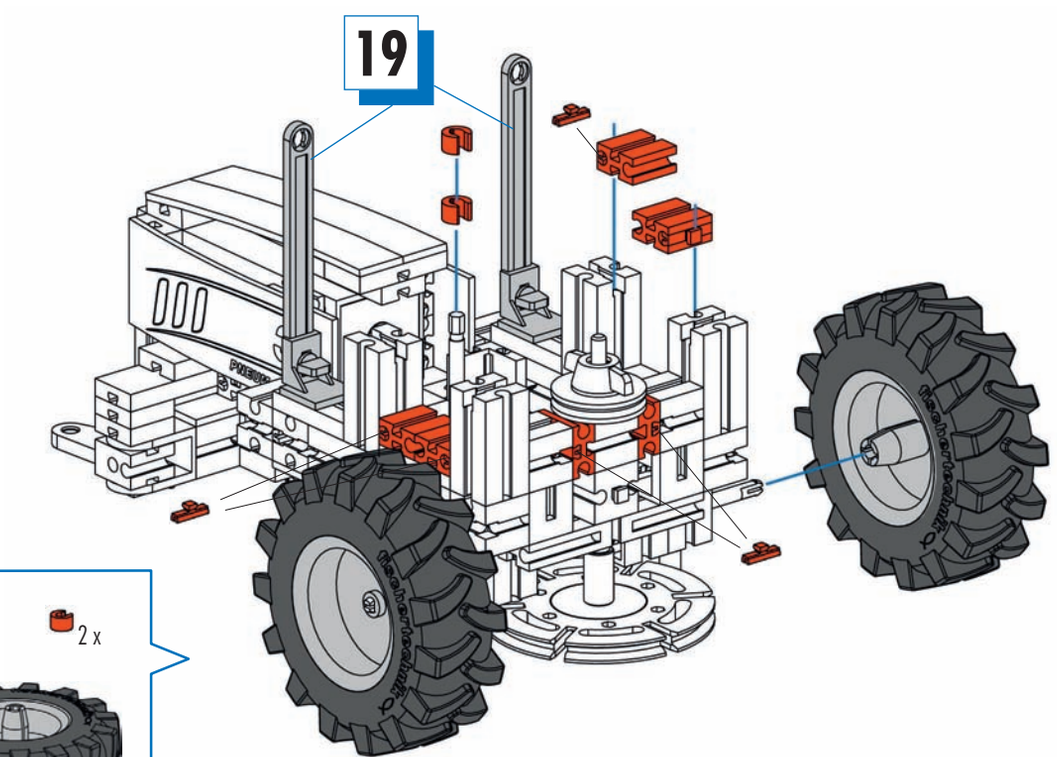
19

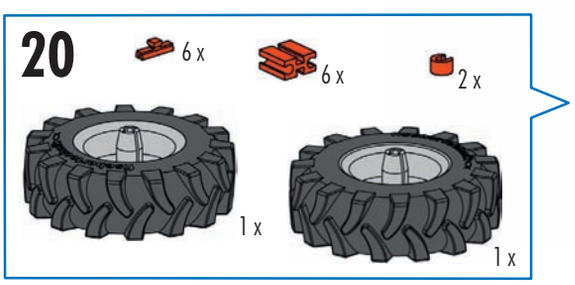
20
6 x
6 x
2 x
1 x
1 x

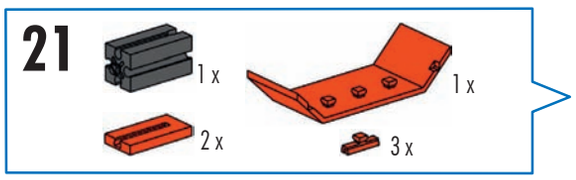
21
1 x
1 x
2 x
3 x

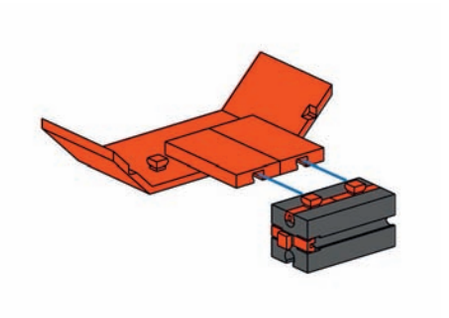

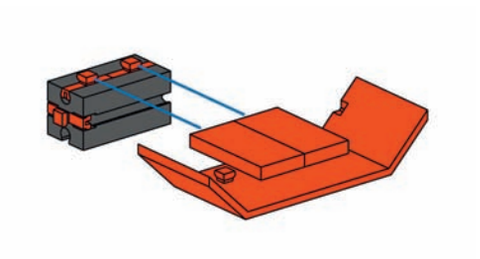

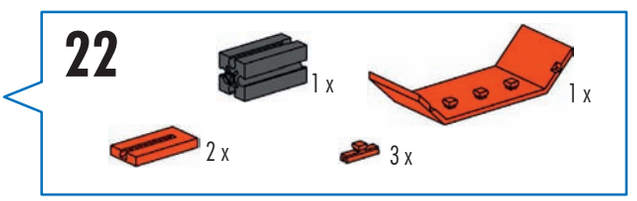
22
1 x
1 x
2 x
3 x

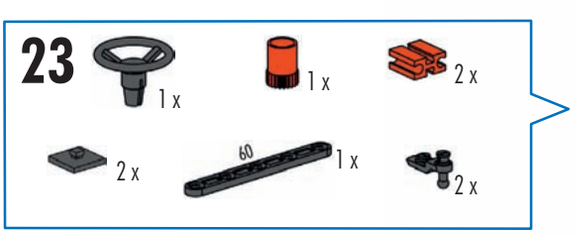
23
1 x
1 x
2 x
2 x
60
1 x
2 x

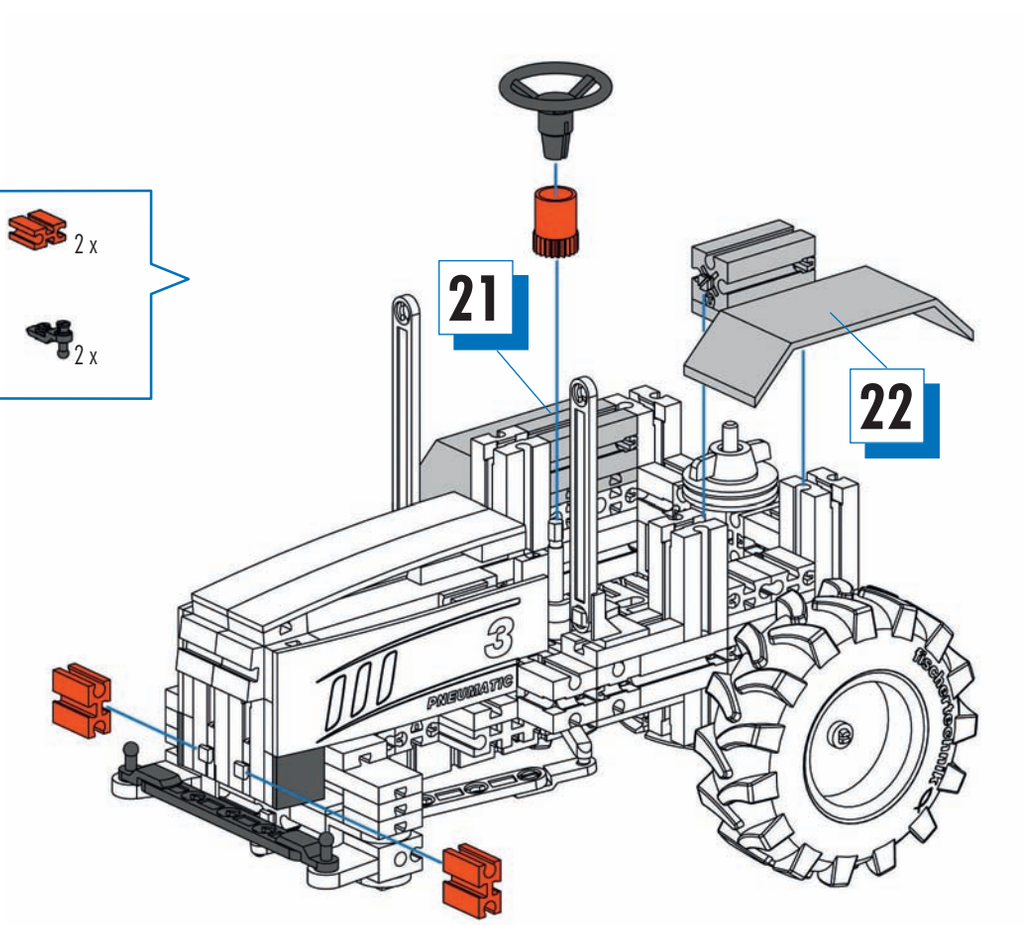
21
22
3
PNEUMATIC

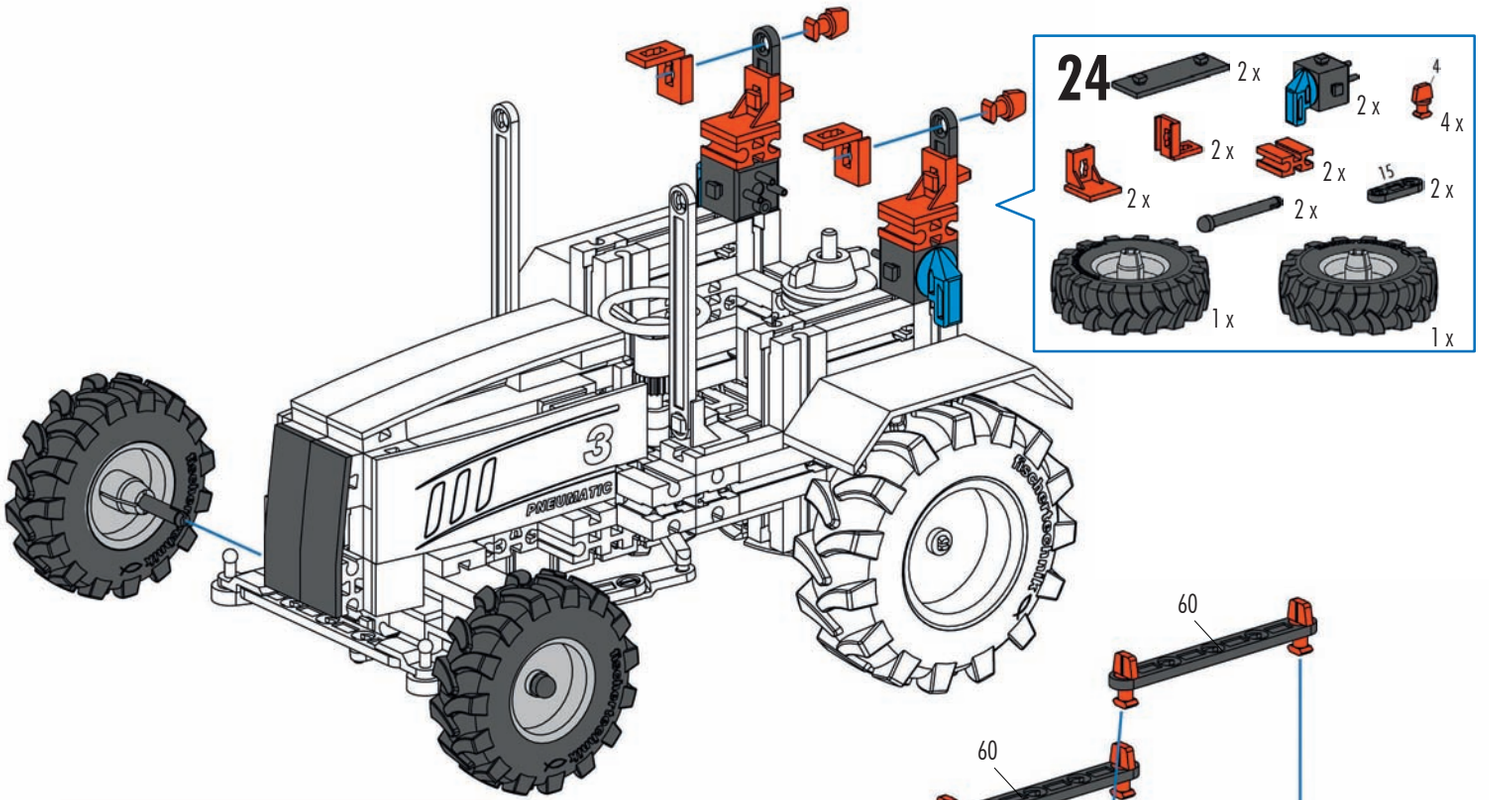
24
2 x
2 x
4
4 x
2 x
2 x
15
2 x
2 x
2 x
1 x
1 x

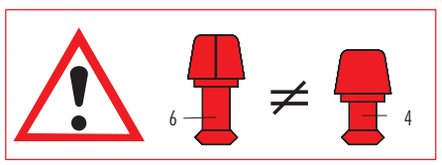
6
4

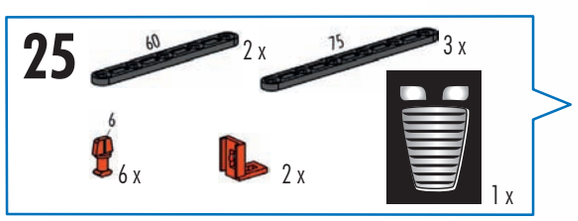
25
60
2 x
75
3 x
6
6 x
2 x
1 x

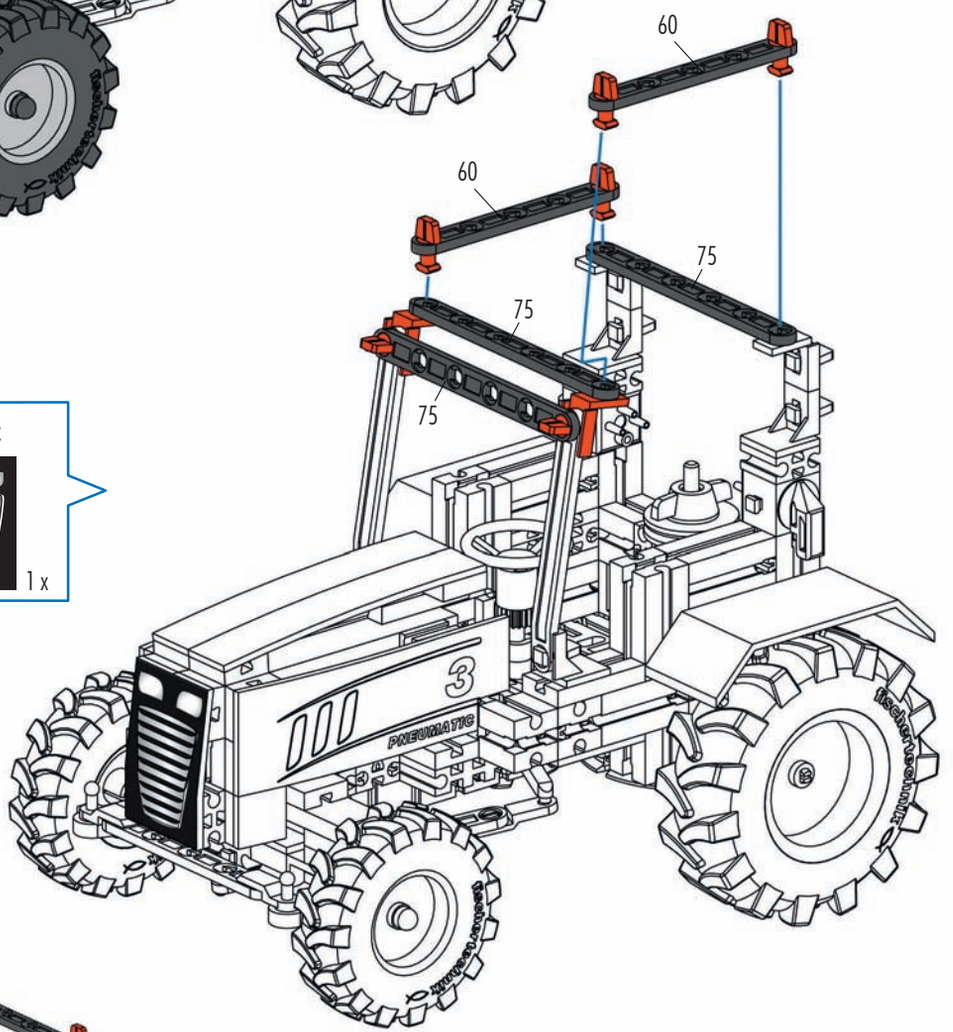
60
60
75
75
75

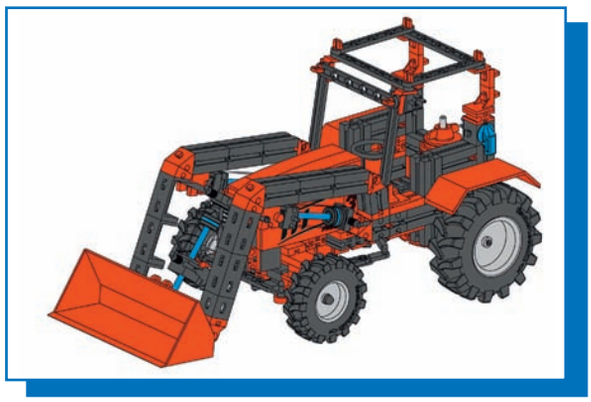

Frontlader
Front loader
Chargeur frontal

Frontlader
Cargador frontal
Carregador frontal

Caricatore frontale
Фронтальный погрузчик
前端式装载机

1-25

Seite	26
Page	26
Page	26
Bladzijde	26
Página	26
Pagina	26
Pagina	26
Страница	26
页次	26

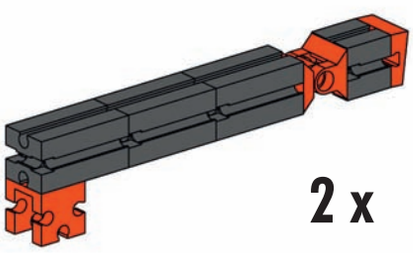

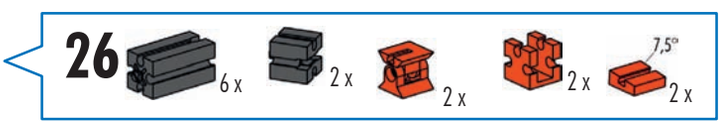

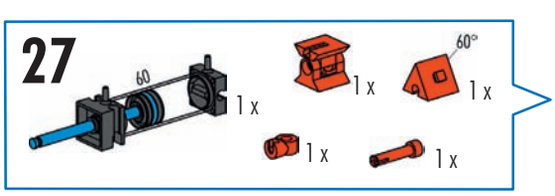

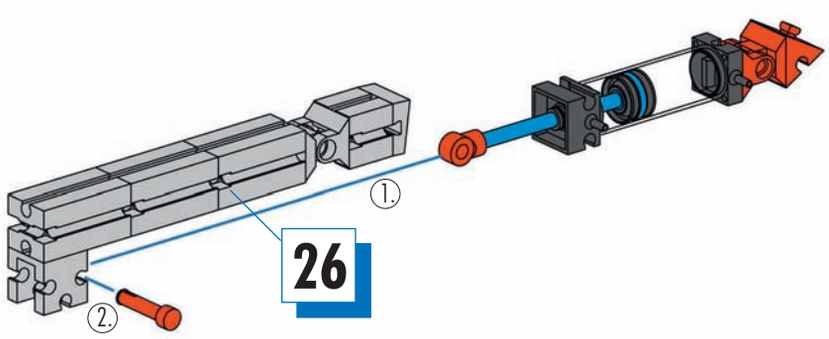

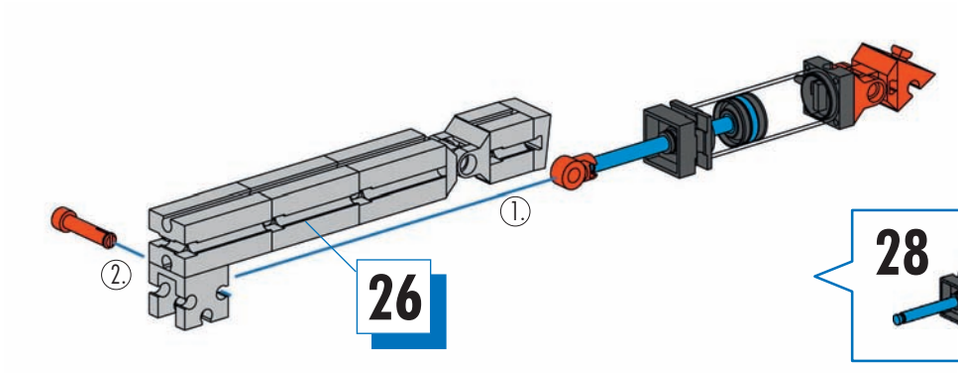
1.
2.
26

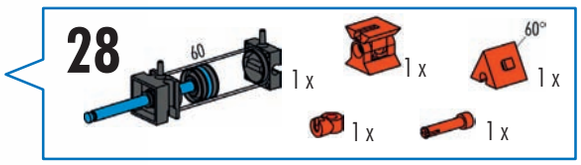
28
60
1 x
1 x
60°
1 x
1 x
1 x

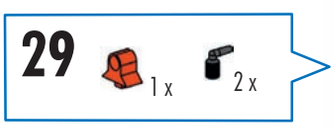
29
1 x
2 x

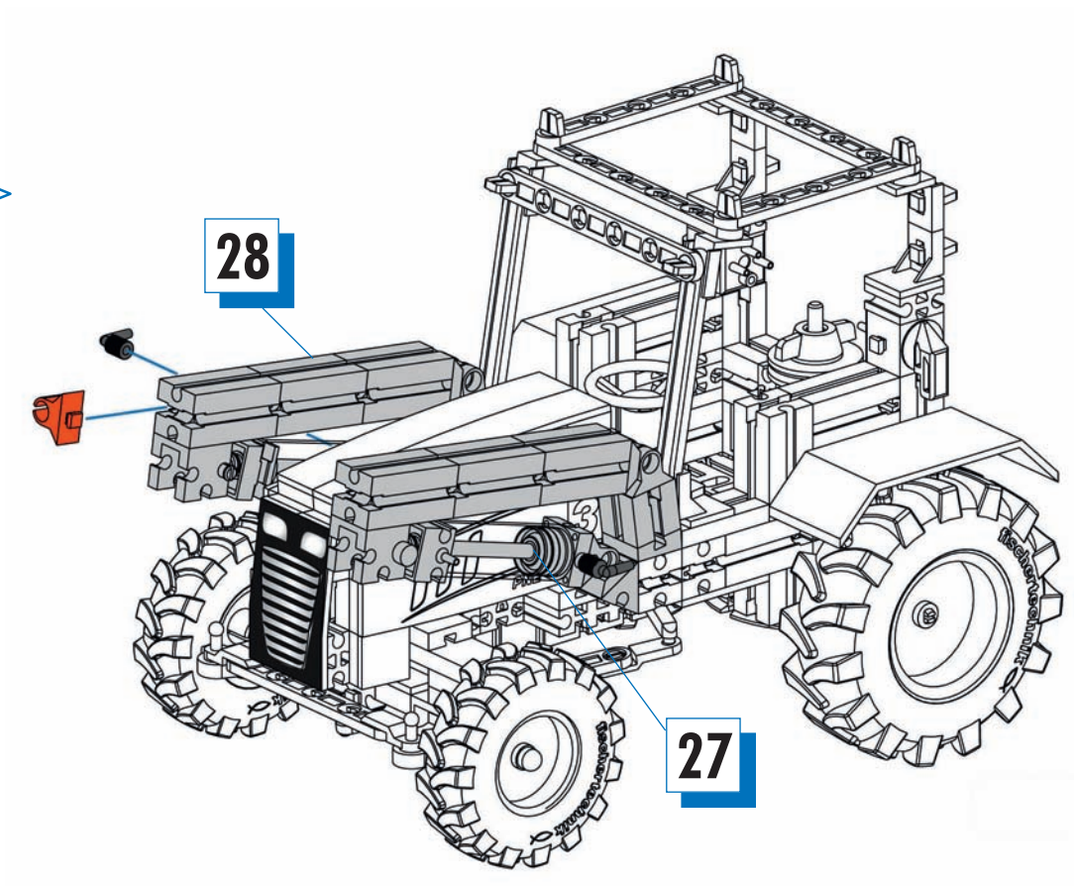
28
27

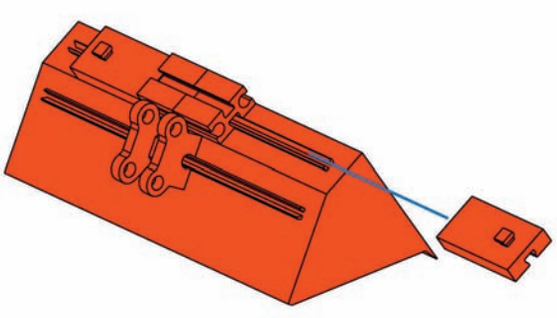

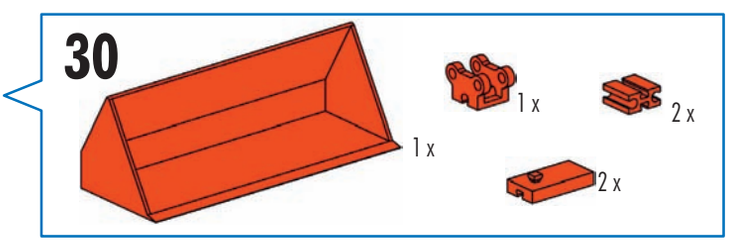
30
1 x
1 x
2 x
2 x

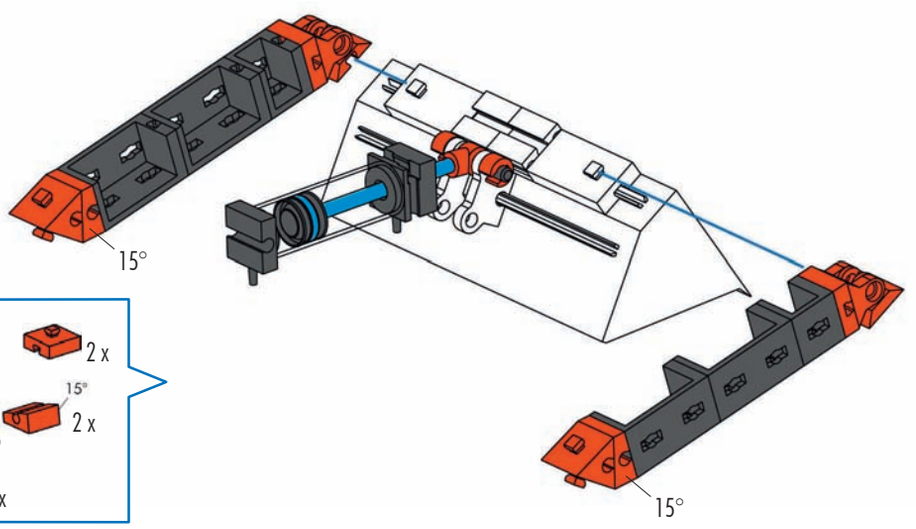

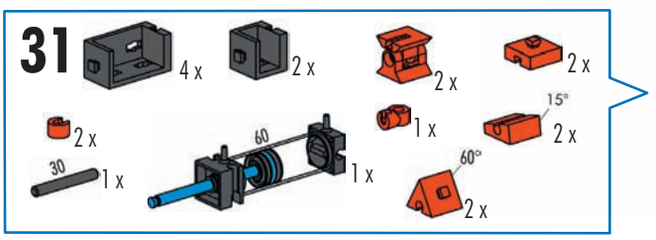

30 mm

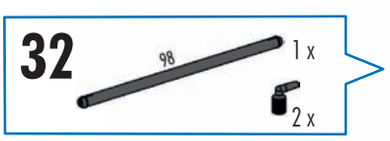

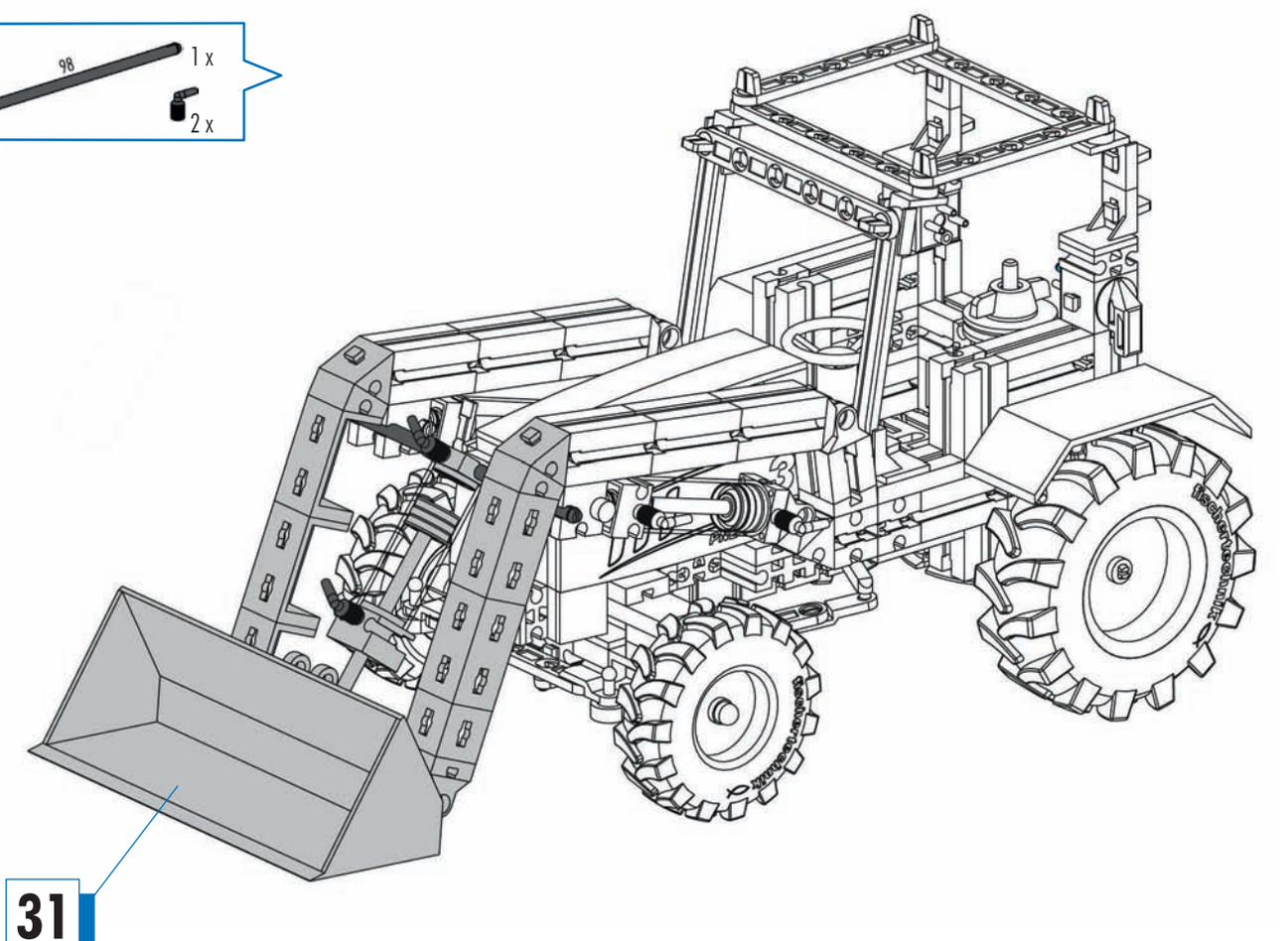

98 mm

389

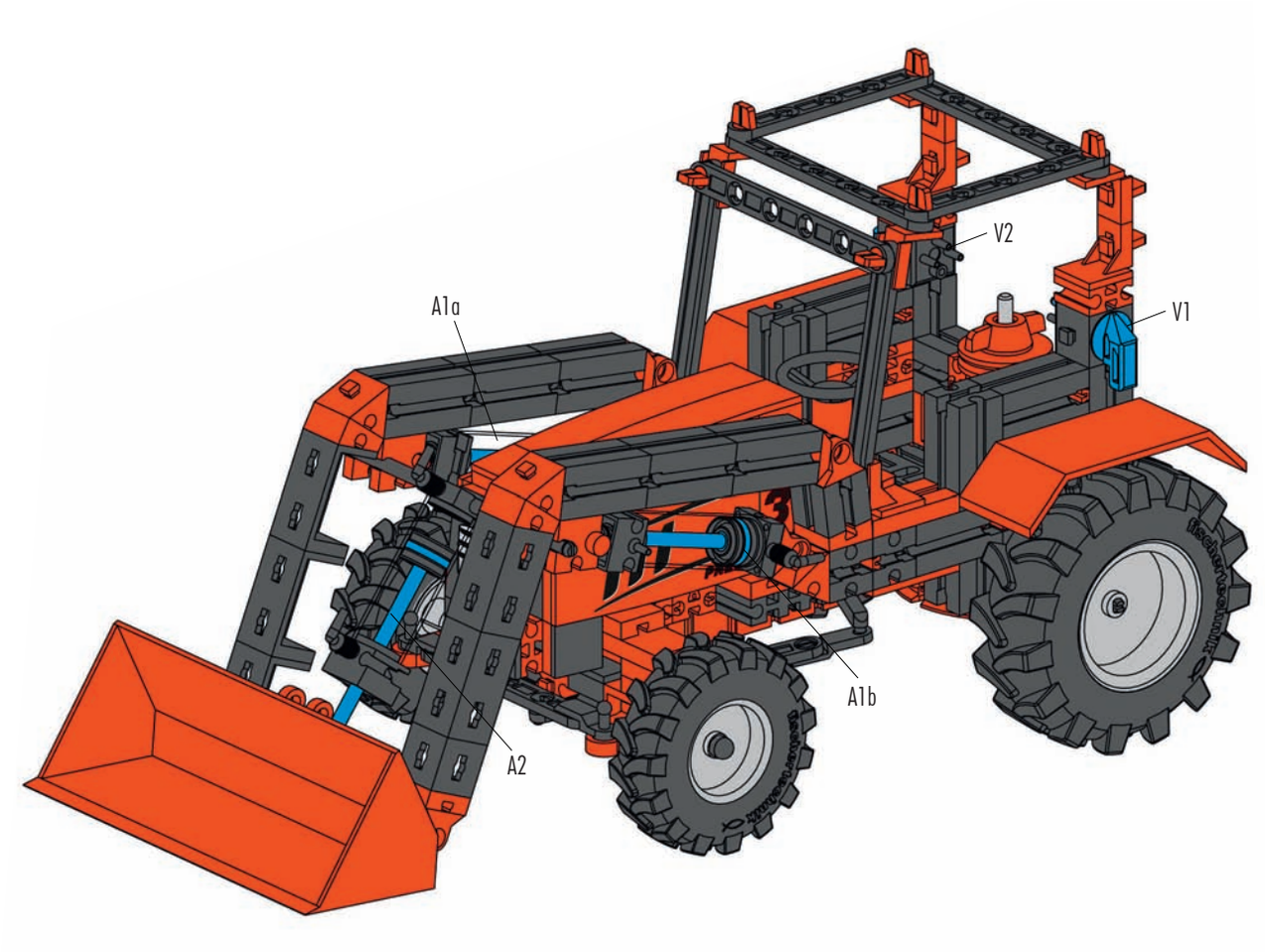

Schlauchanschlussplan
Air line layout plan
Plan de raccordement de conduits

Aansluitschema van slang
Racor de empalme
Plano de conexão de mangueira

Schema di allacciamento tubi
Схема подключения шлангов
软管连接图

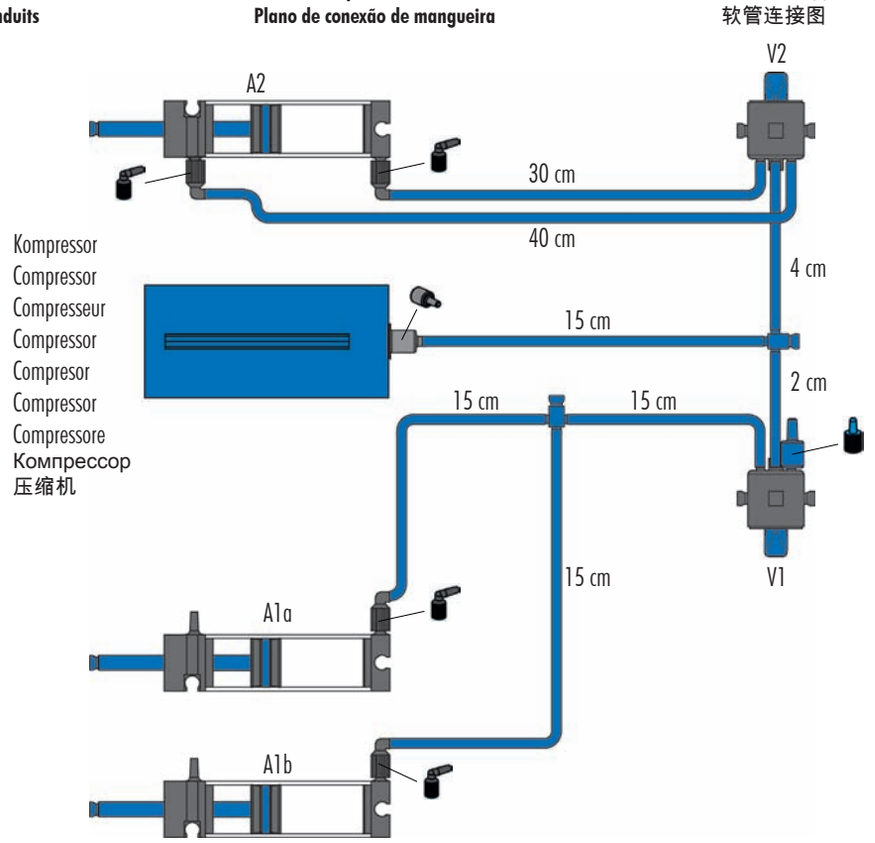

390

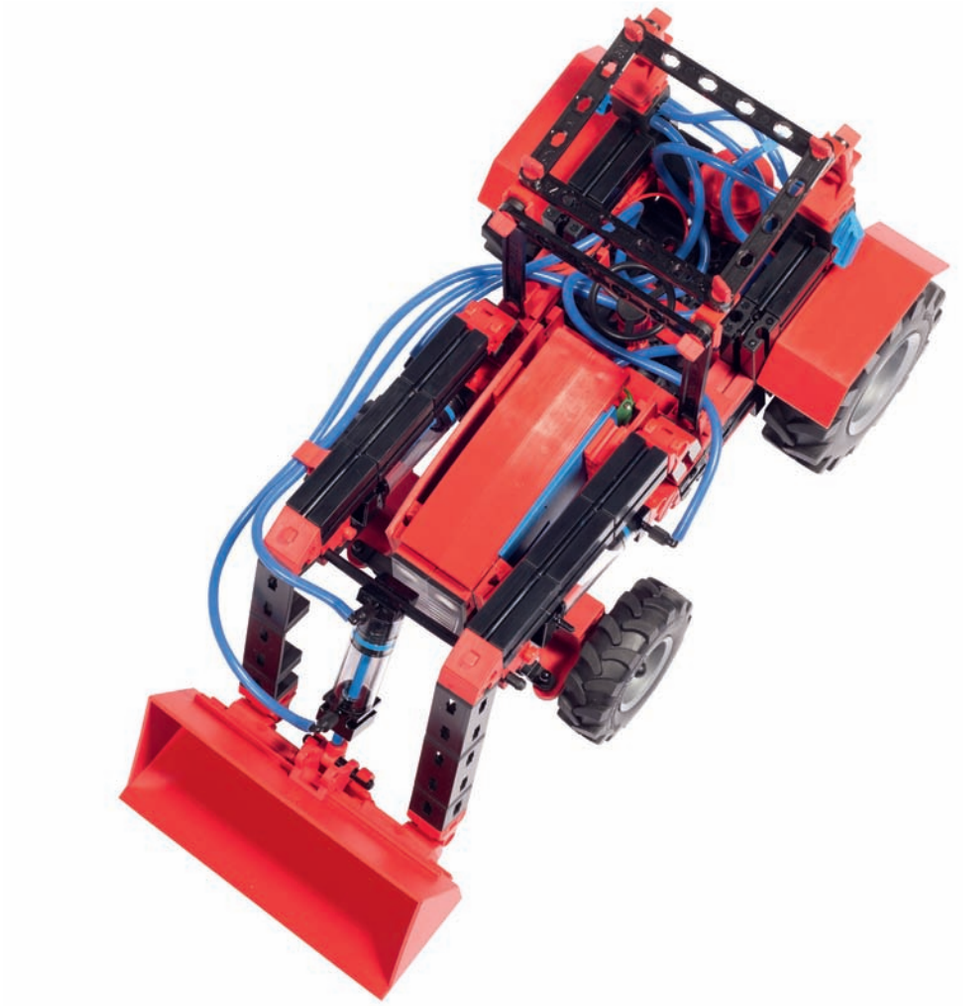

Accu Set

ACCU SET
34 969

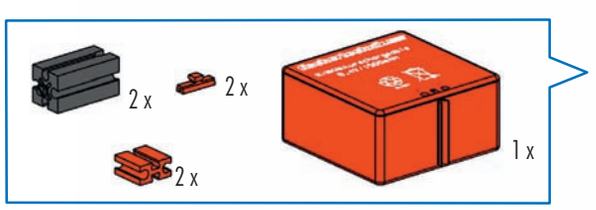

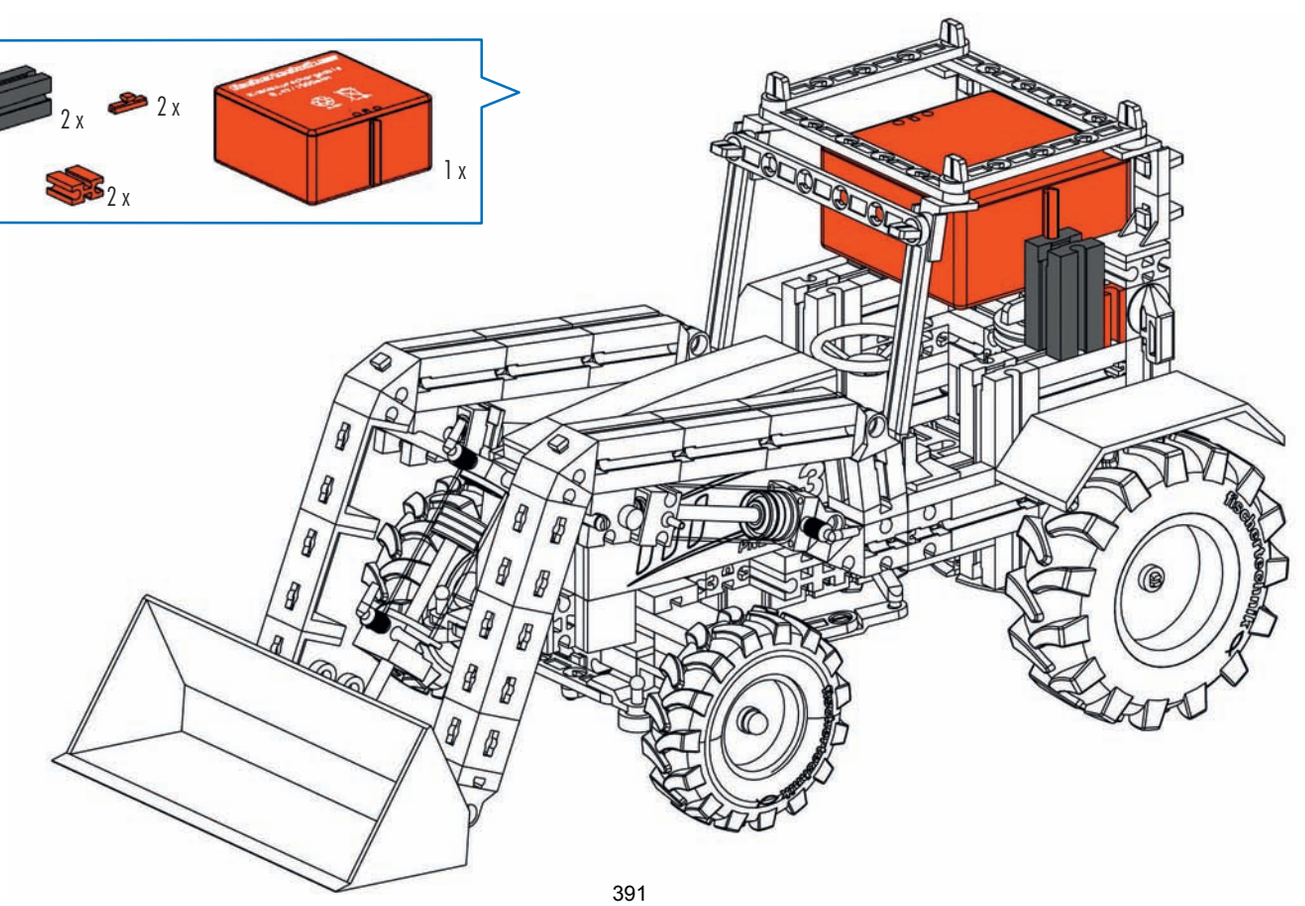

391

Heuballengreifer
Hay bale picker
Surélévateur de balles de foin

Hooibalengrijper
Manipulador de fardos de heno
Garra de fardos de feno

Pick-up per balle di fieno
Подборщик рулонов сена
草捆抓爪

1-25

Seite	26
Page	26
Page	26
Bladzijde	26
Página	26
Pagina	26
Pagina	26
Страница	26
页次	26

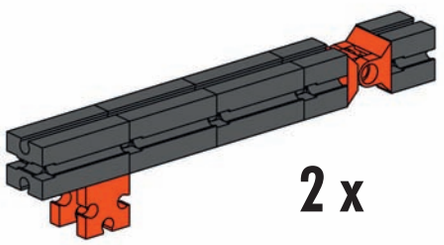

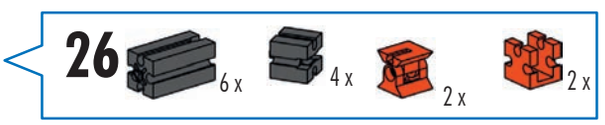

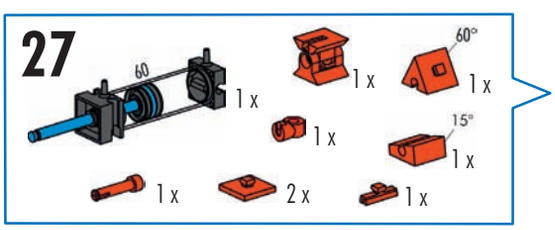

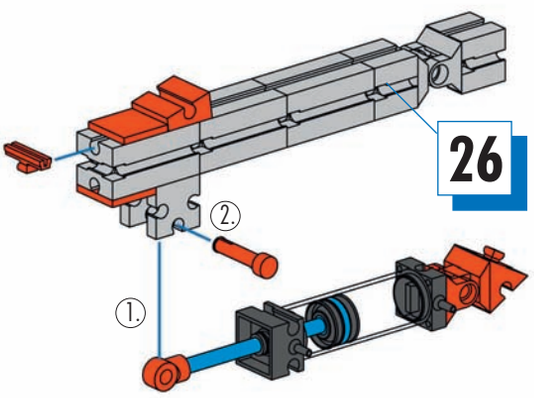

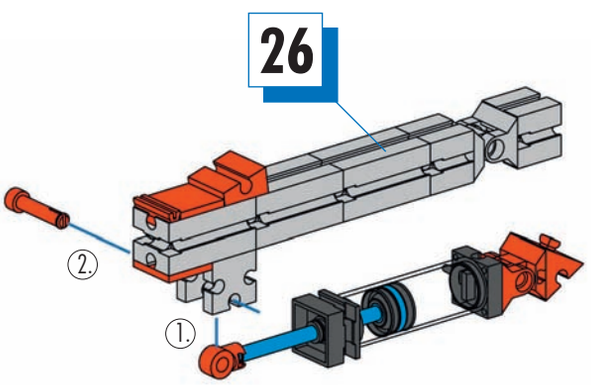

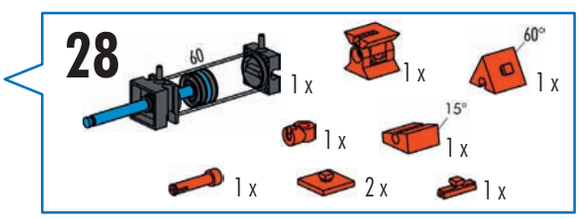

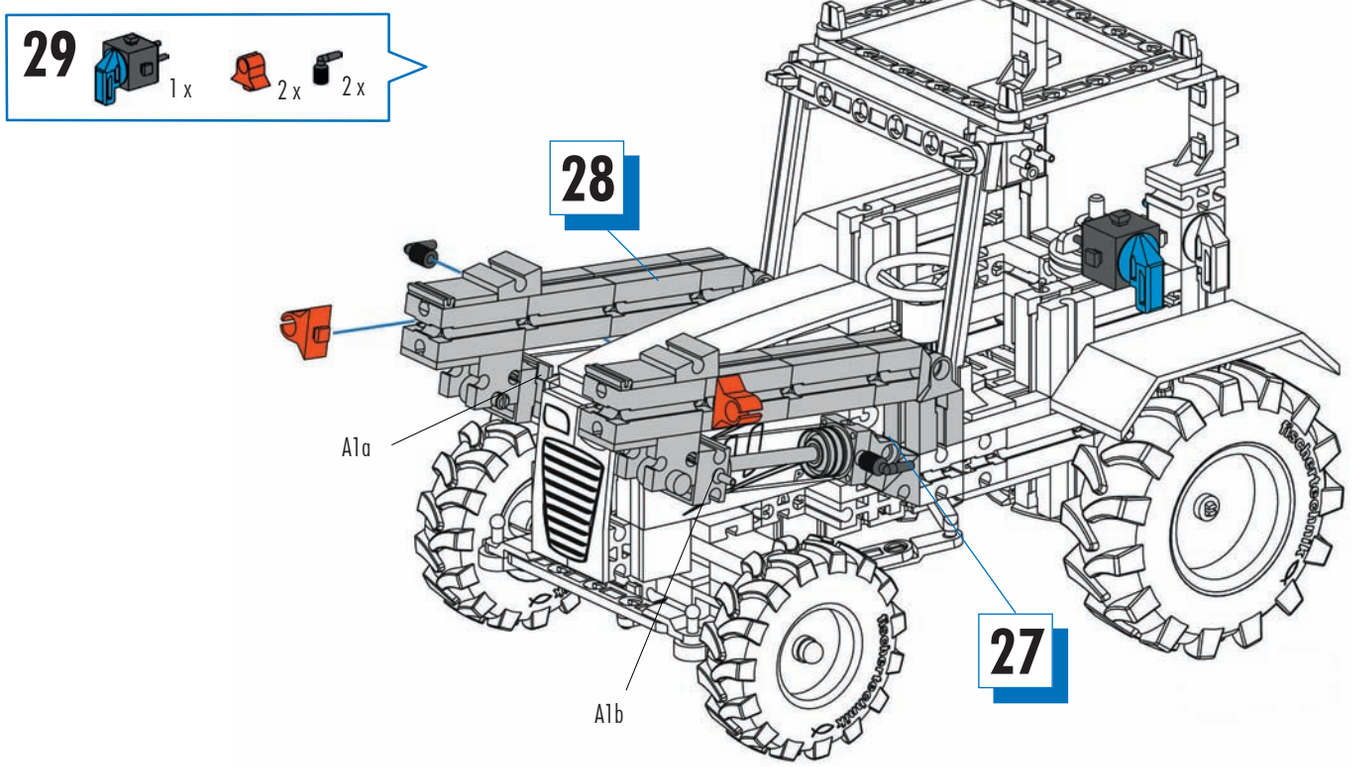
29
1 x
2 x
2 x
28
A1a
A1b
27

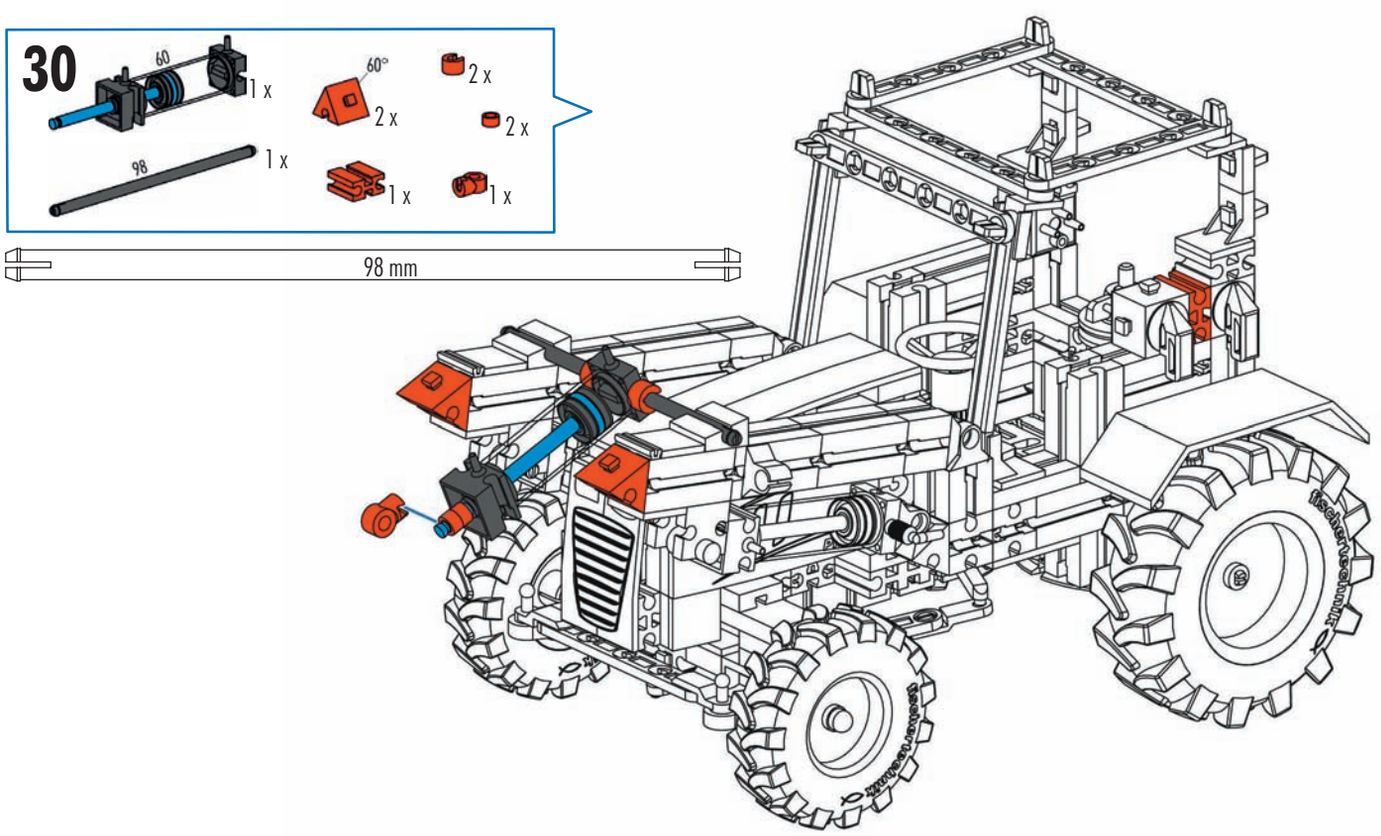
30
60
1 x
60°
2 x
2 x
98
1 x
1 x
1 x
98 mm

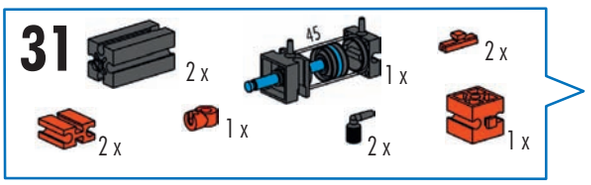
31
2 x
45
1 x
2 x
2 x
1 x
1 x
2 x

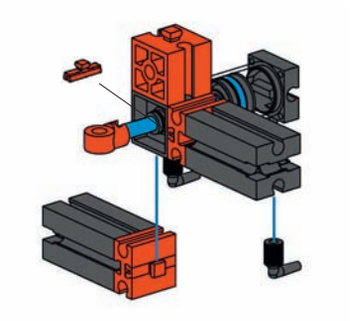

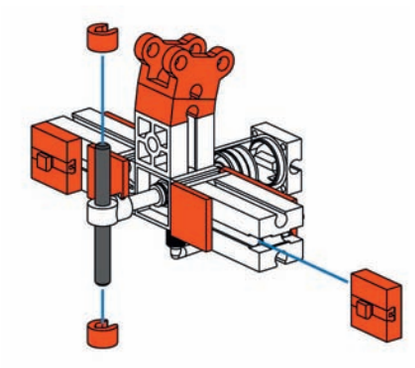

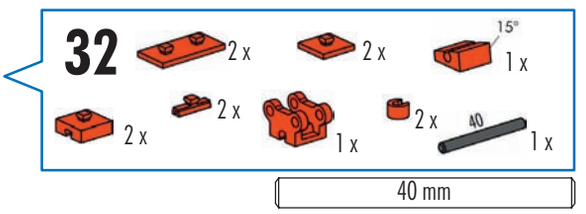
32
2 x
2 x
15°
1 x
2 x
2 x
1 x
2 x
40
1 x
40 mm

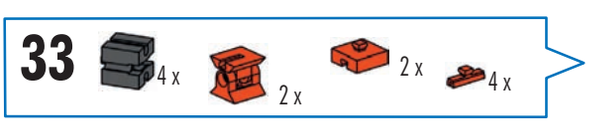
33
4 x
2 x
2 x
4 x

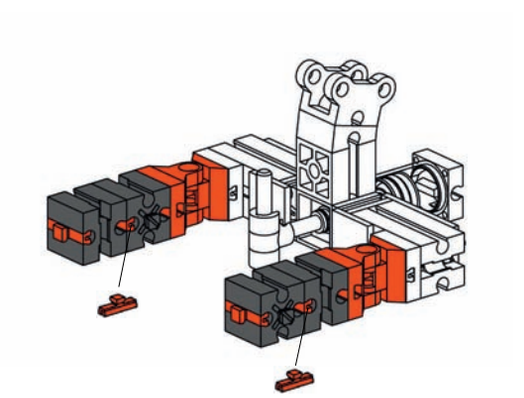

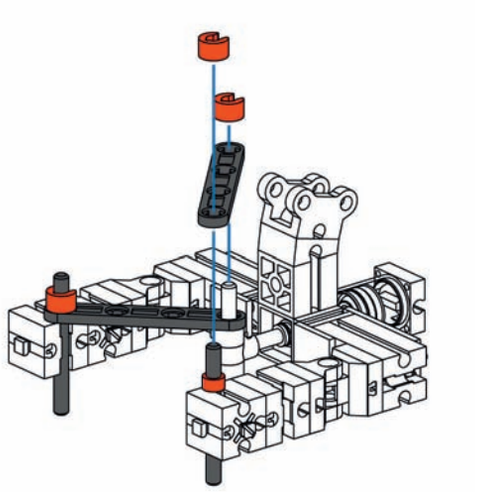

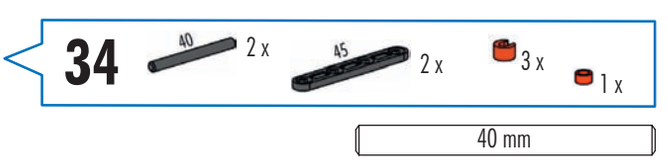
34
40
2 x
45
2 x
3 x
1 x
40 mm

35
45
2 x
3 x
1 x

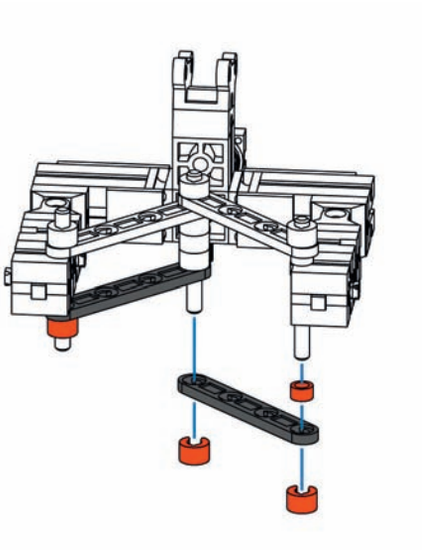

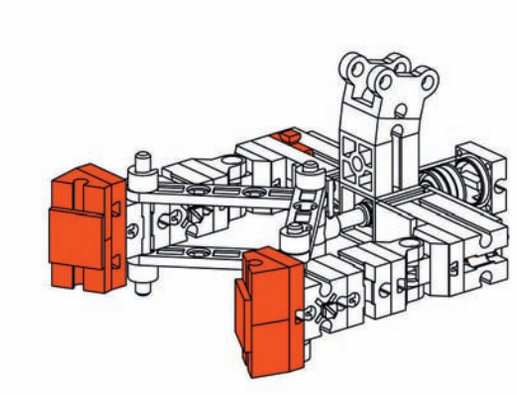

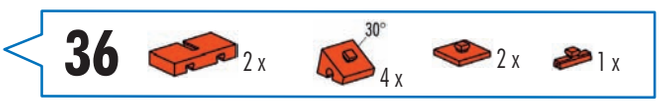
36
2 x
30°
4 x
2 x
1 x

37
2 x
2 x
7,5°
2 x
1 x
2 x
30
1 x
2 x
4 x
2 x

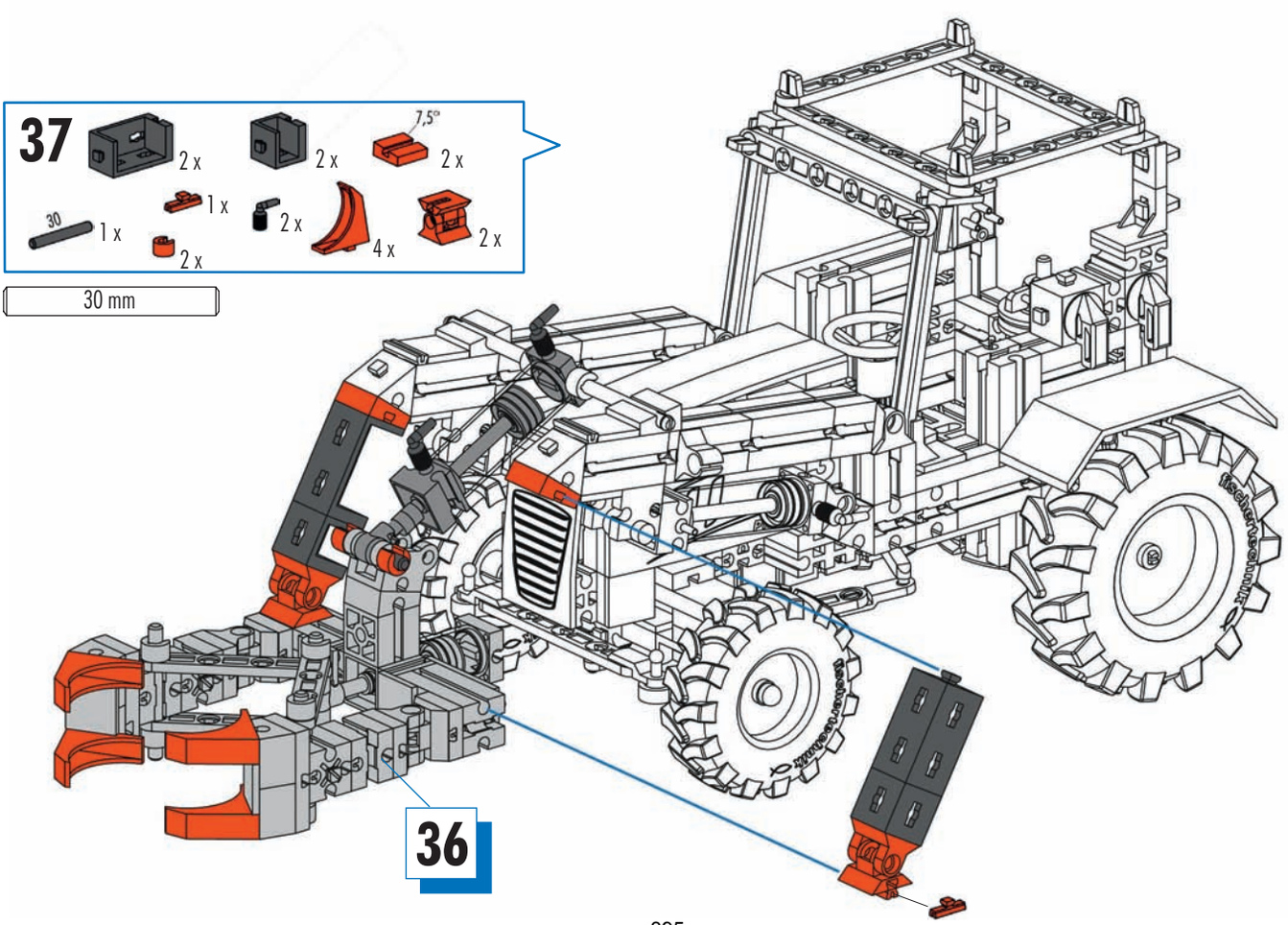
30 mm
36

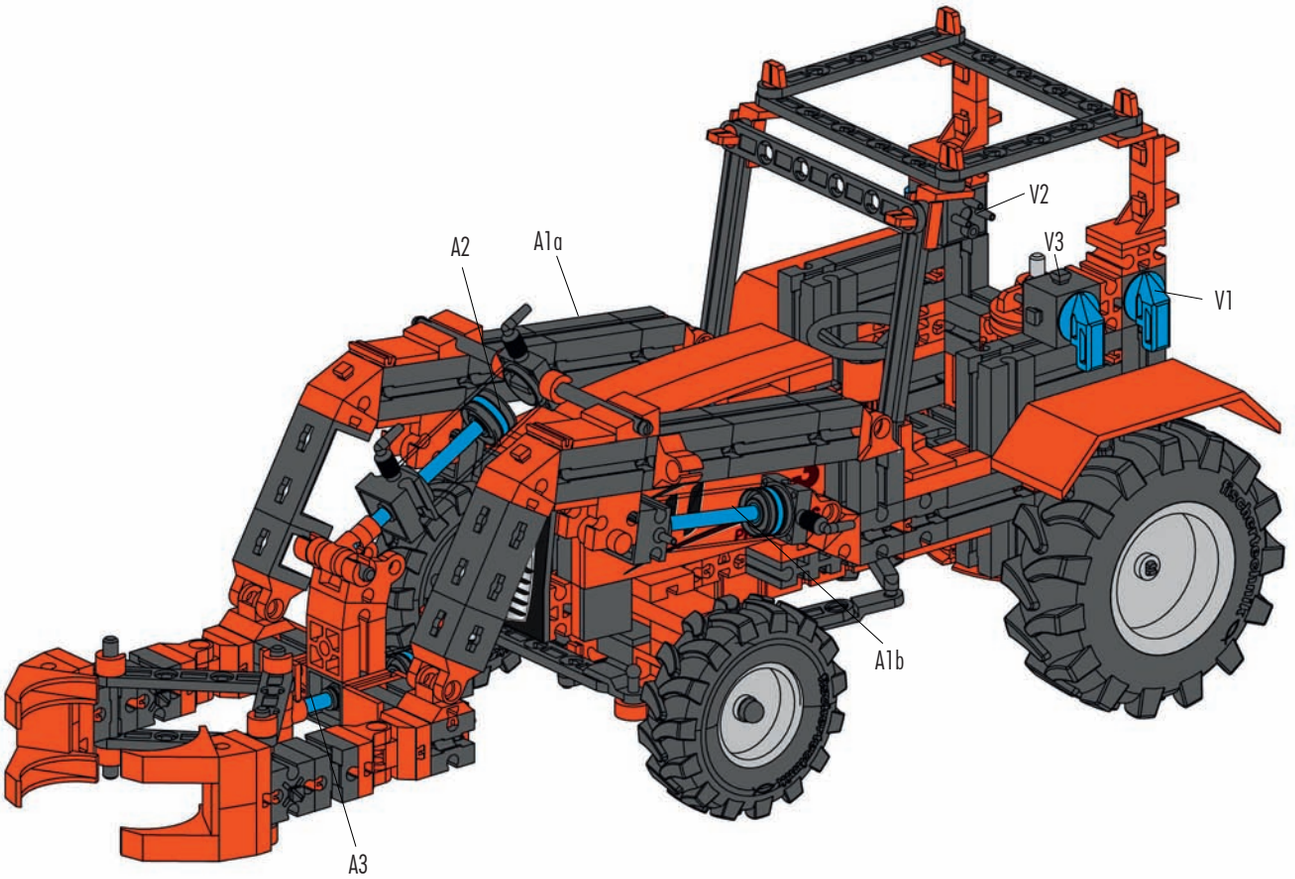

Schlauchanschlussplan
Air line layout plan
Plan de raccordement de conduits

Aansluitschema van slang
Racor de empalme
Plano de conexão de mangueira

Schema di allacciamento tubi
Схема подключения шлангов
软管连接图

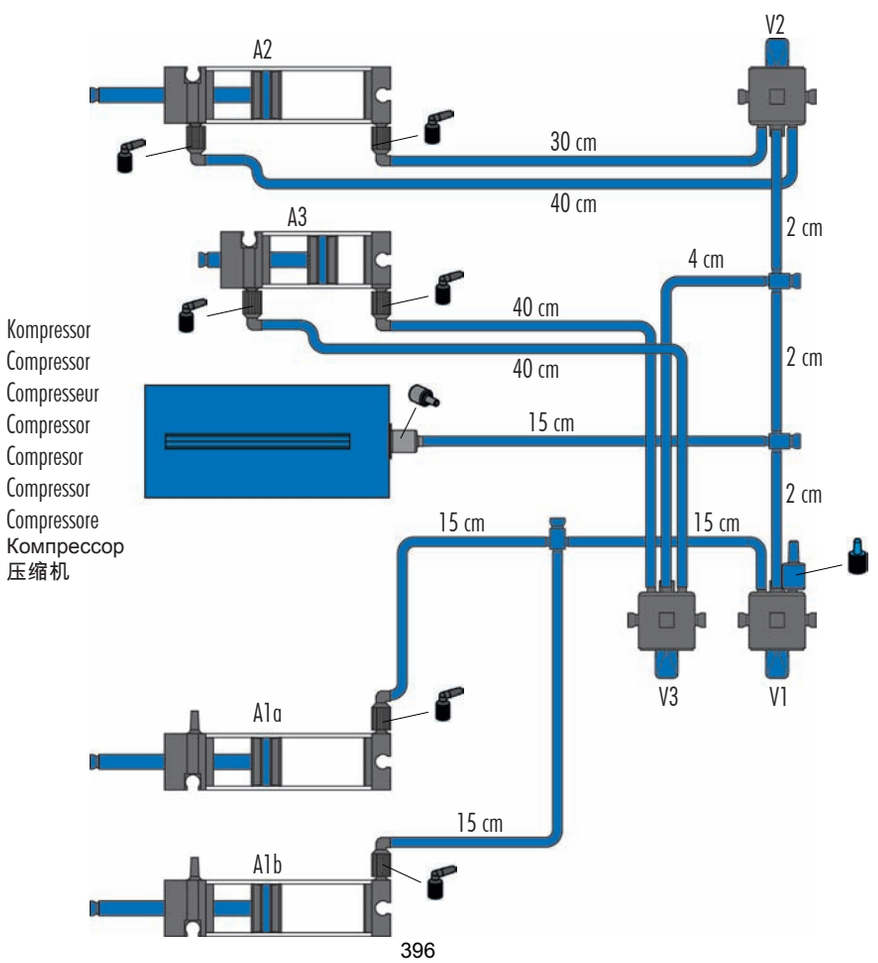

396

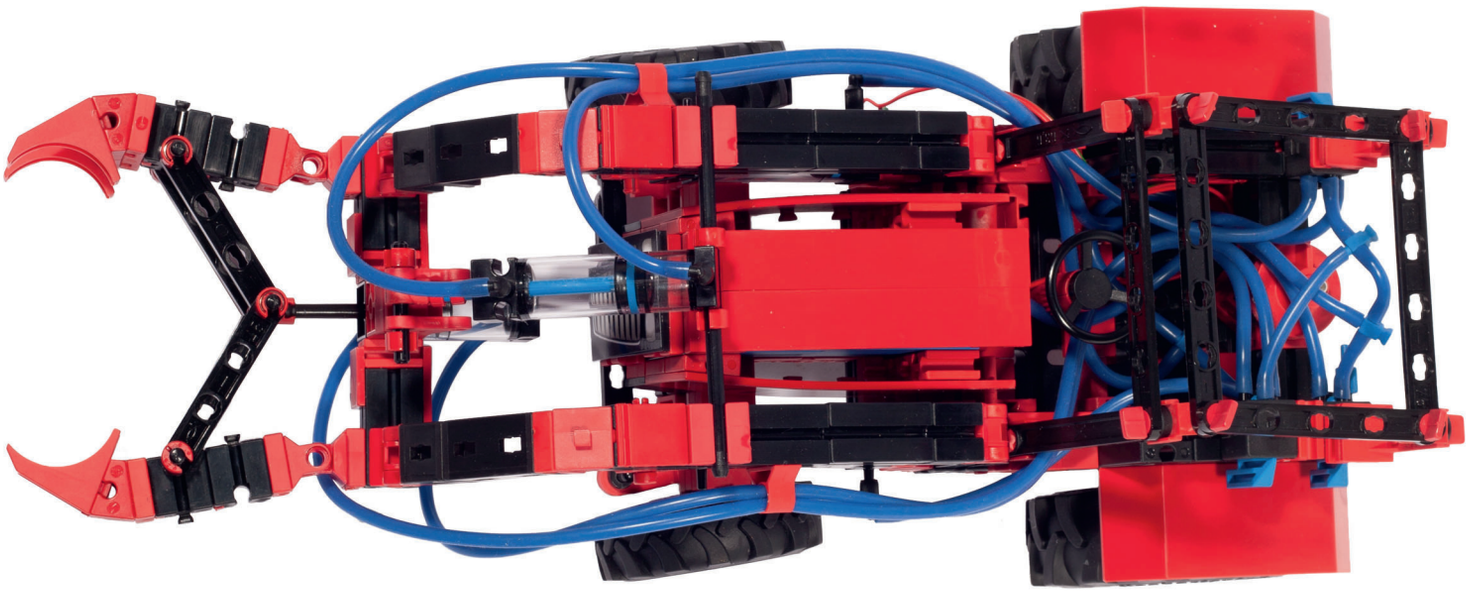

Accu Set

ACCU SET
34 969

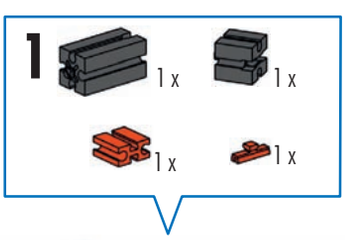

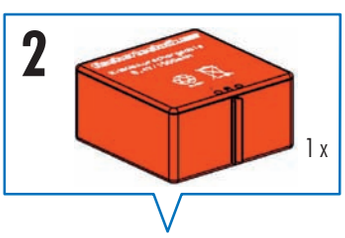

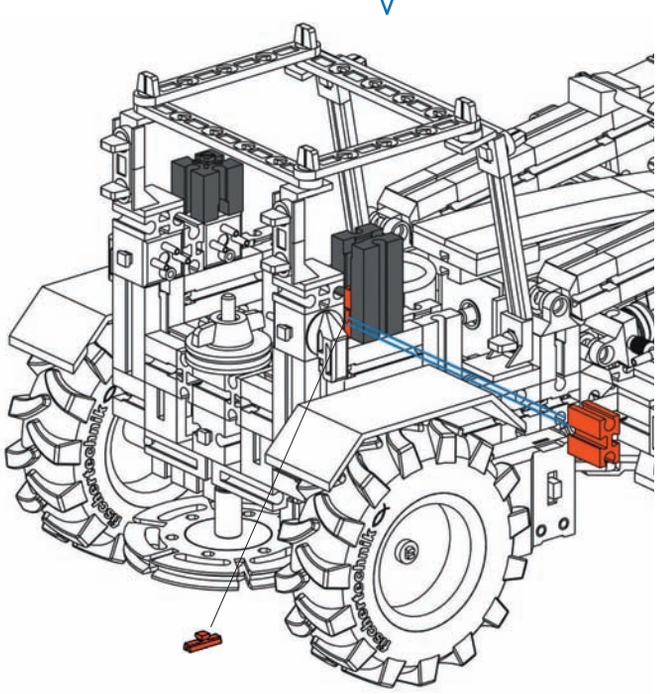

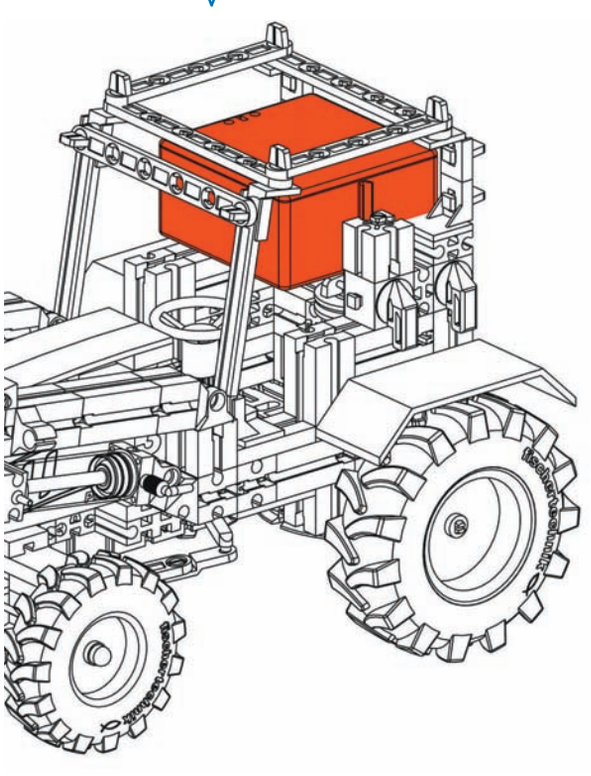

Baumstammgreifer
Tree trunk grip
Débusqueur forestier

Boomstamgrijper
Manipulador de troncos de árboles
Garra de troncos

Pick-up per tronchi d'albero
Лесопогрузчик
木材抓斗

1-25

Seite	26
Page	26
Page	26
Bladzijde	26
Página	26
Pagina	26
Pagina	26
Страница	26
页次	26

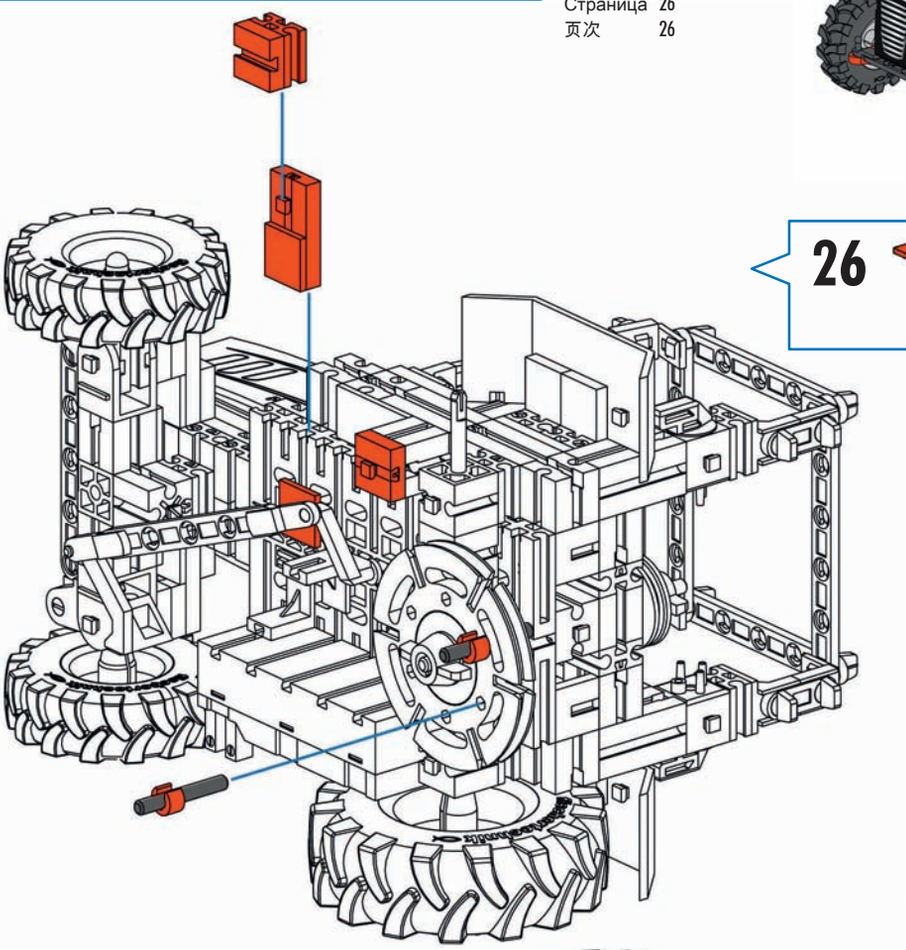

26

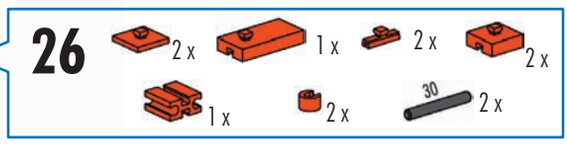

30 mm

27

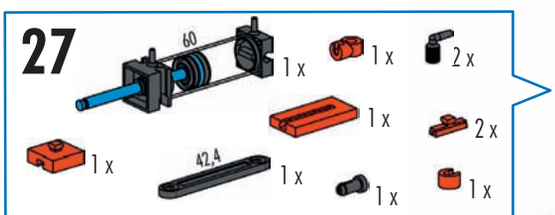

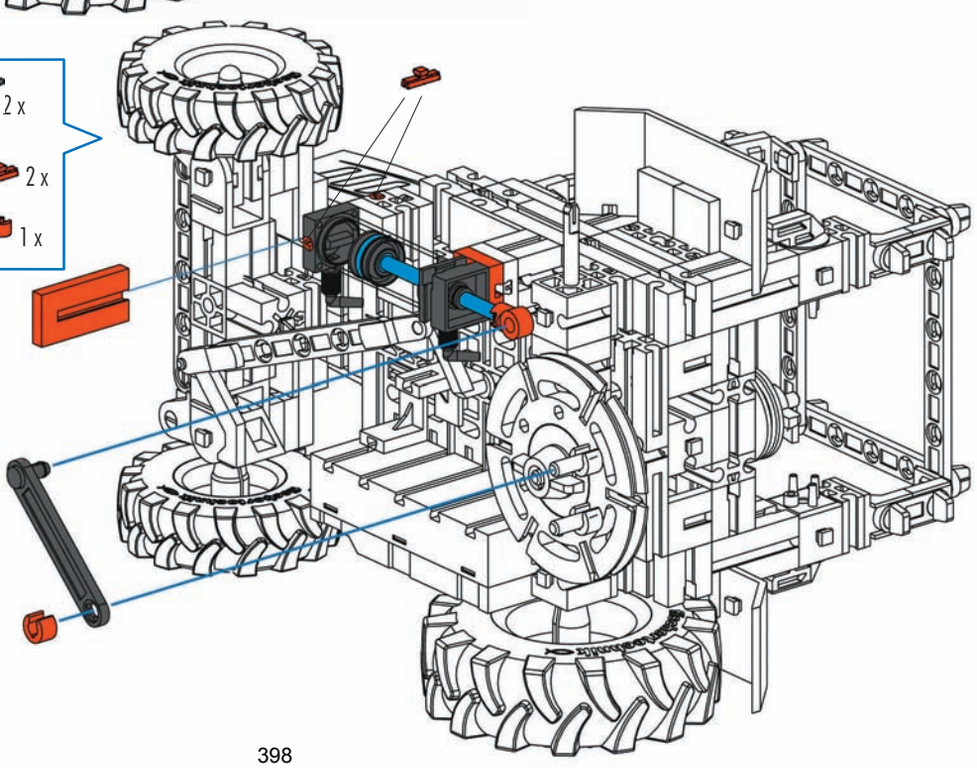

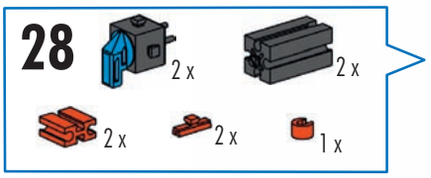
28
2 x
2 x
2 x
2 x
1 x

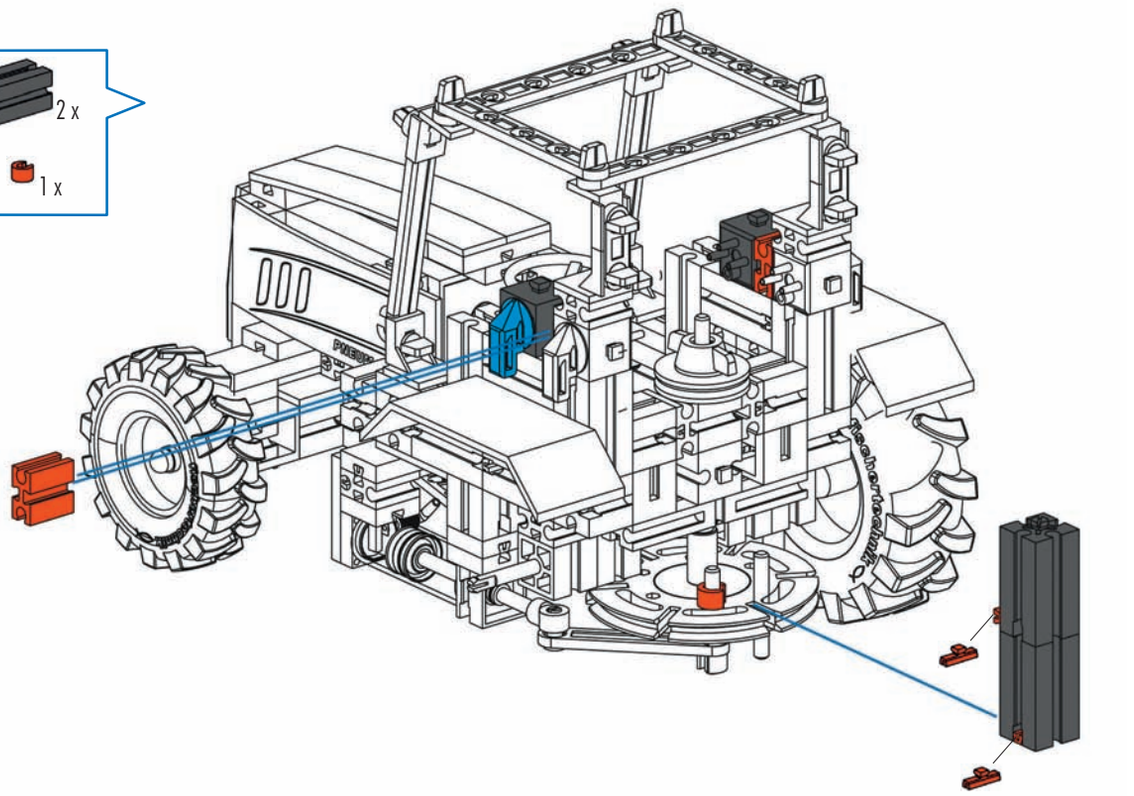

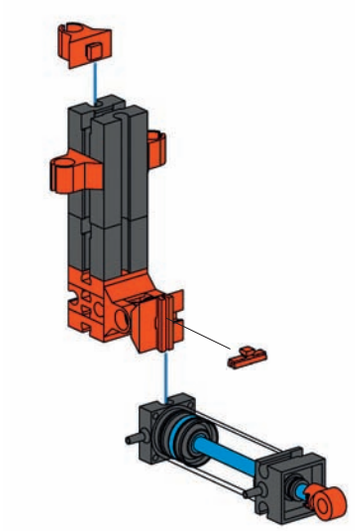

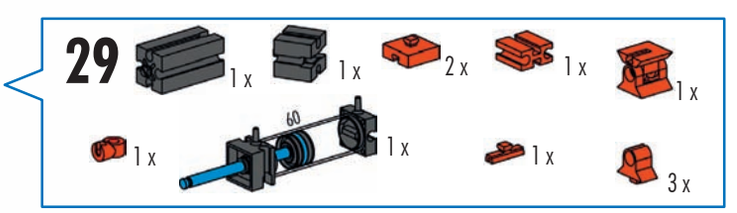
29
1 x
1 x
2 x
1 x
1 x
1 x
60
1 x
1 x
3 x

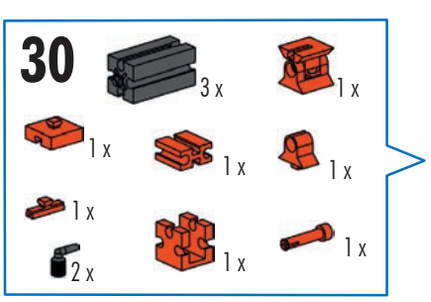
30
3 x
1 x
1 x
1 x
1 x
1 x
2 x
1 x
1 x

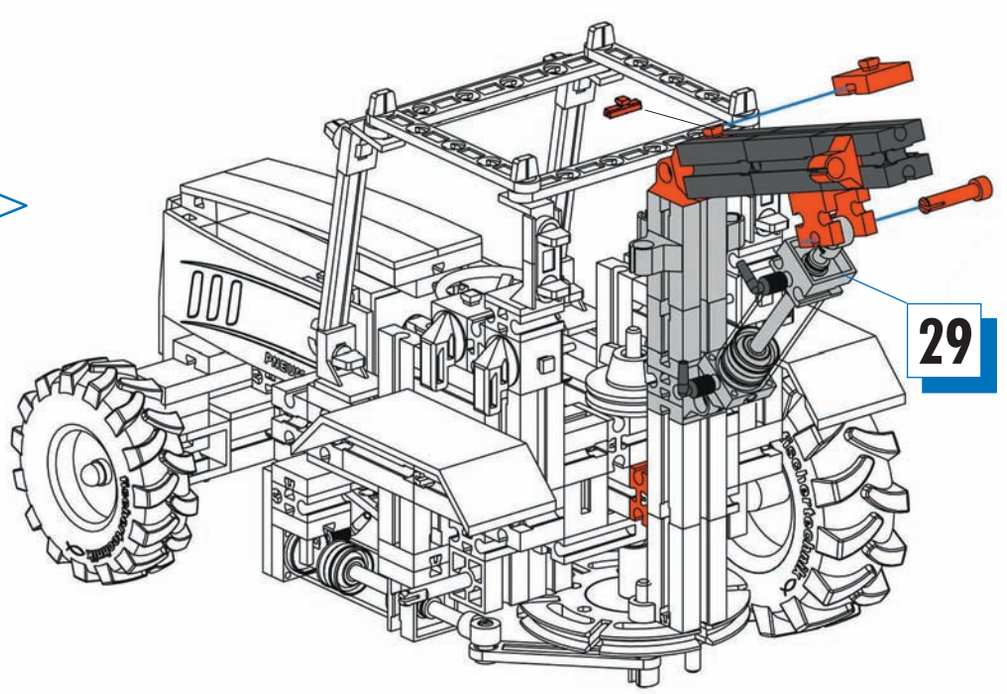
29

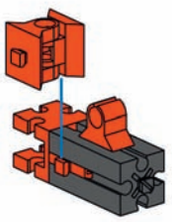

31

1 x 1 x 1 x 1 x 1 x

32

60 1 x 1 x 1 x

1 x 4 x

1 x 1 x 2 x

31

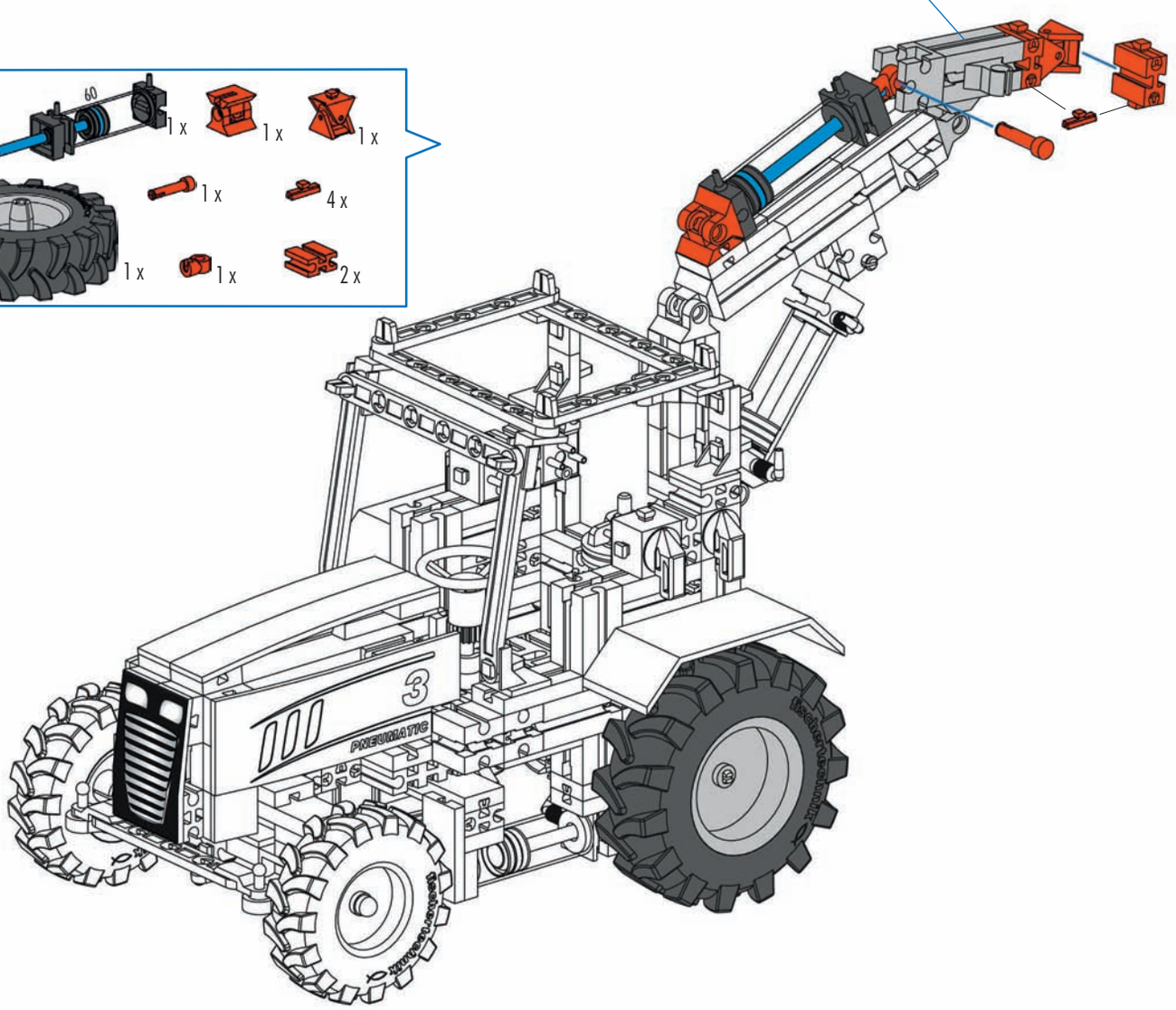

33

45 1 x 2 x 1 x 2 x

40 1 x 4 x 2 x 2 x

40 mm

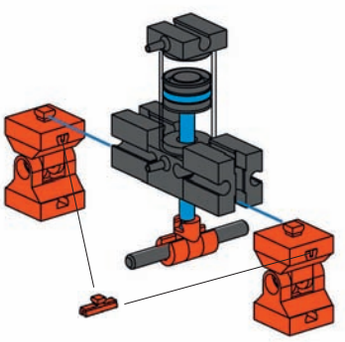

34

2 x 40 2 x 30 2 x 1 x 3 x

40 mm

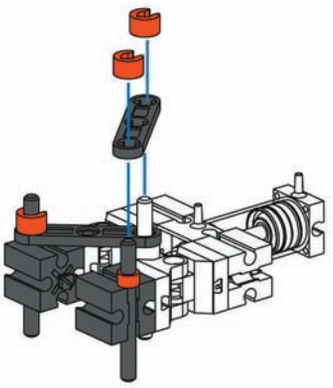

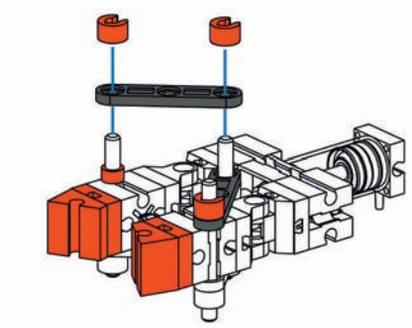

35

30° 2 x 2 x 30 2 x 1 x 3 x

36

4 x 60° 1 x 1 x 4 x

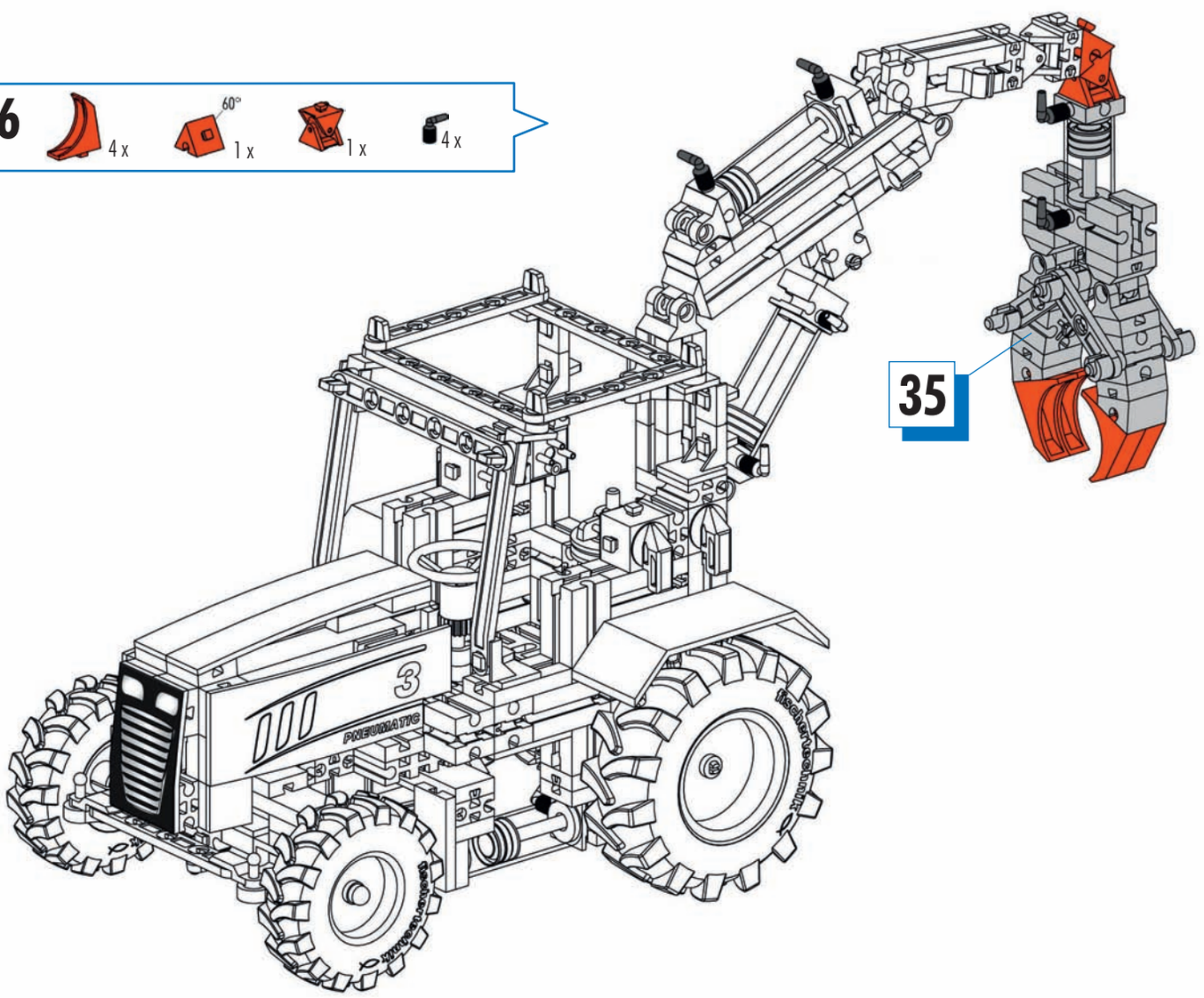

37

2 x

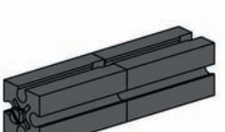

401

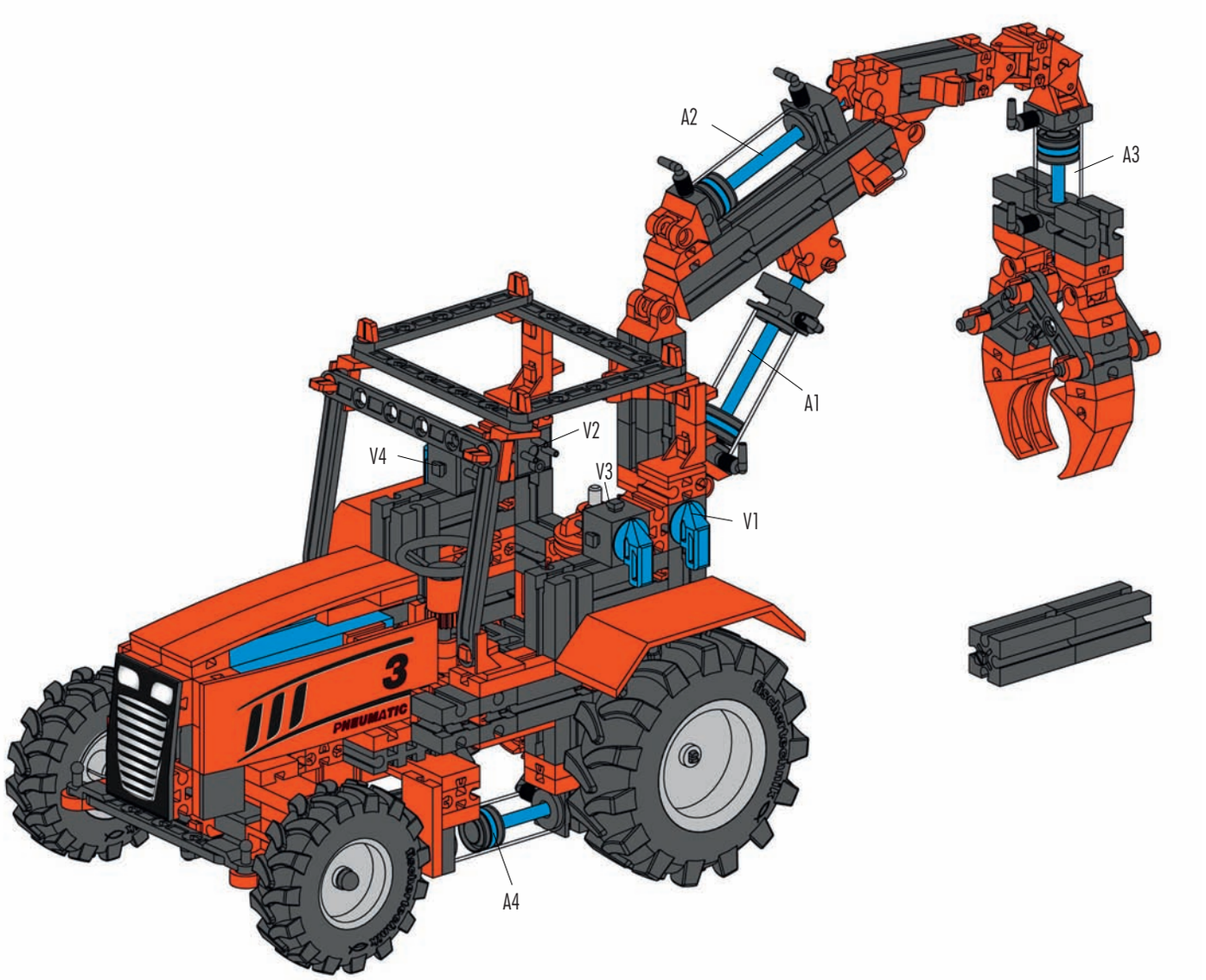

Schlauchanschlussplan
Air line layout plan
Plan de raccordement de conduits

Aansluitschema van slang
Racor de empalme
Plano de conexão de mangueira

Schema di allacciamento tubi
Схема подключения шлангов
软管连接图

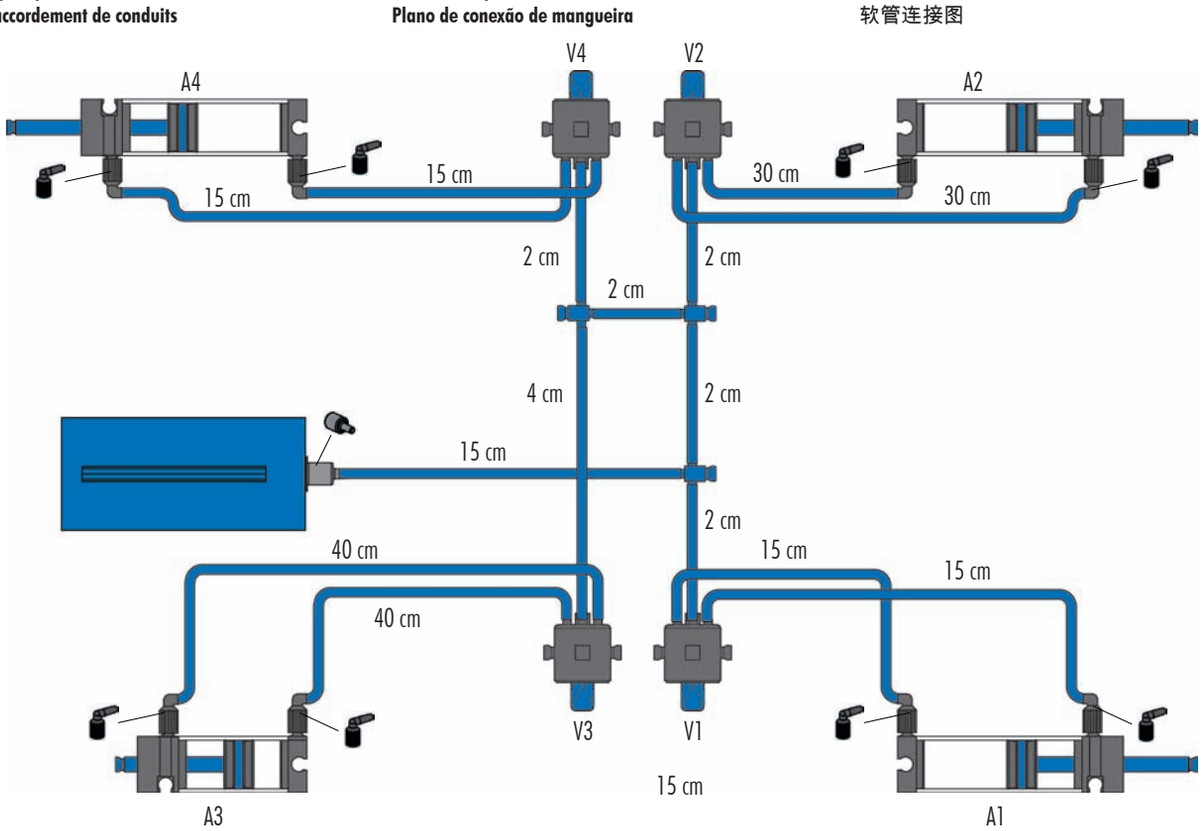

402

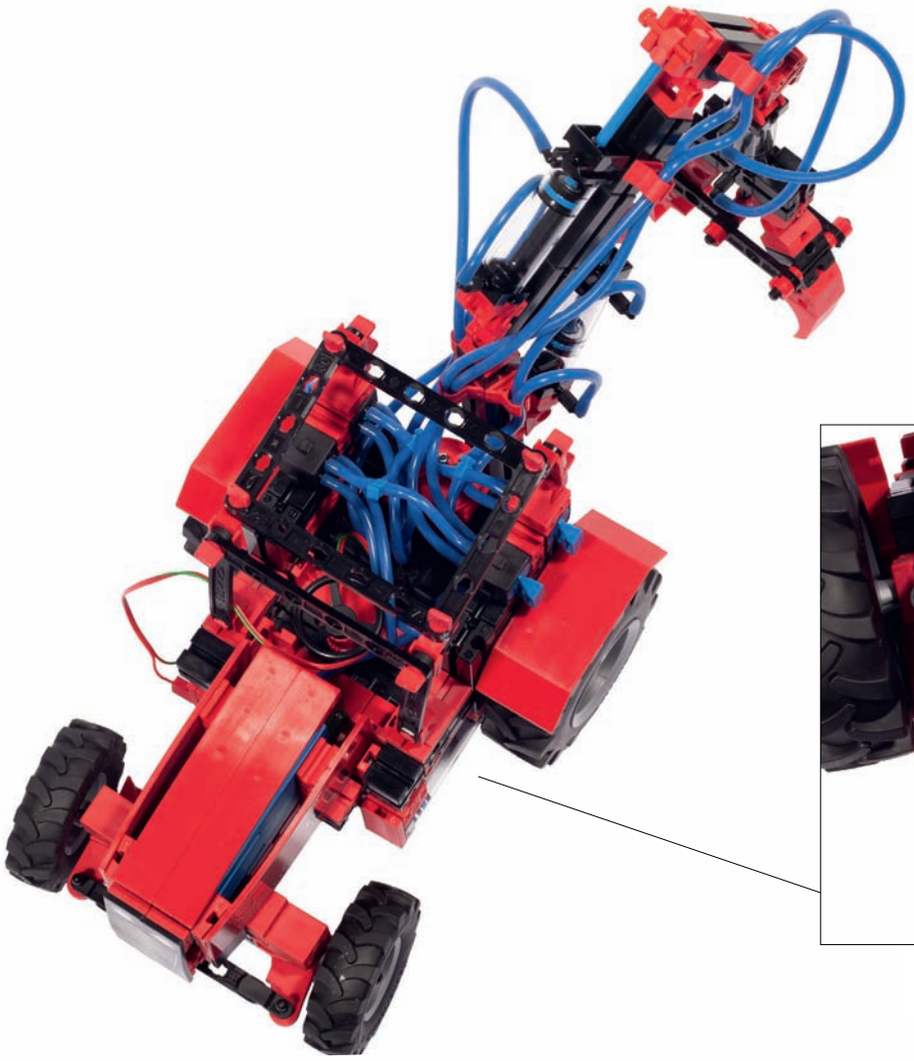

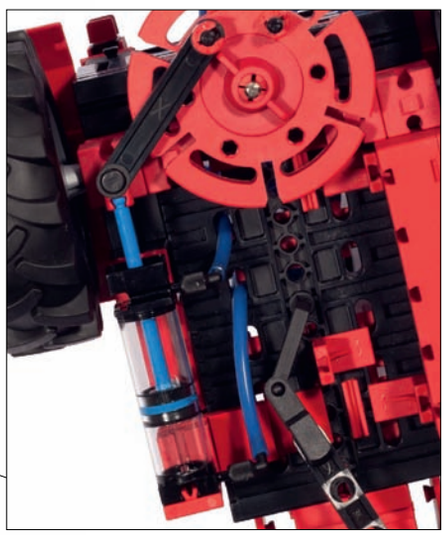

Accu Set

ACCU SET
34 969

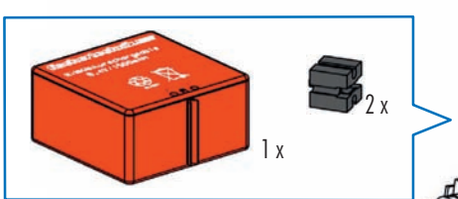

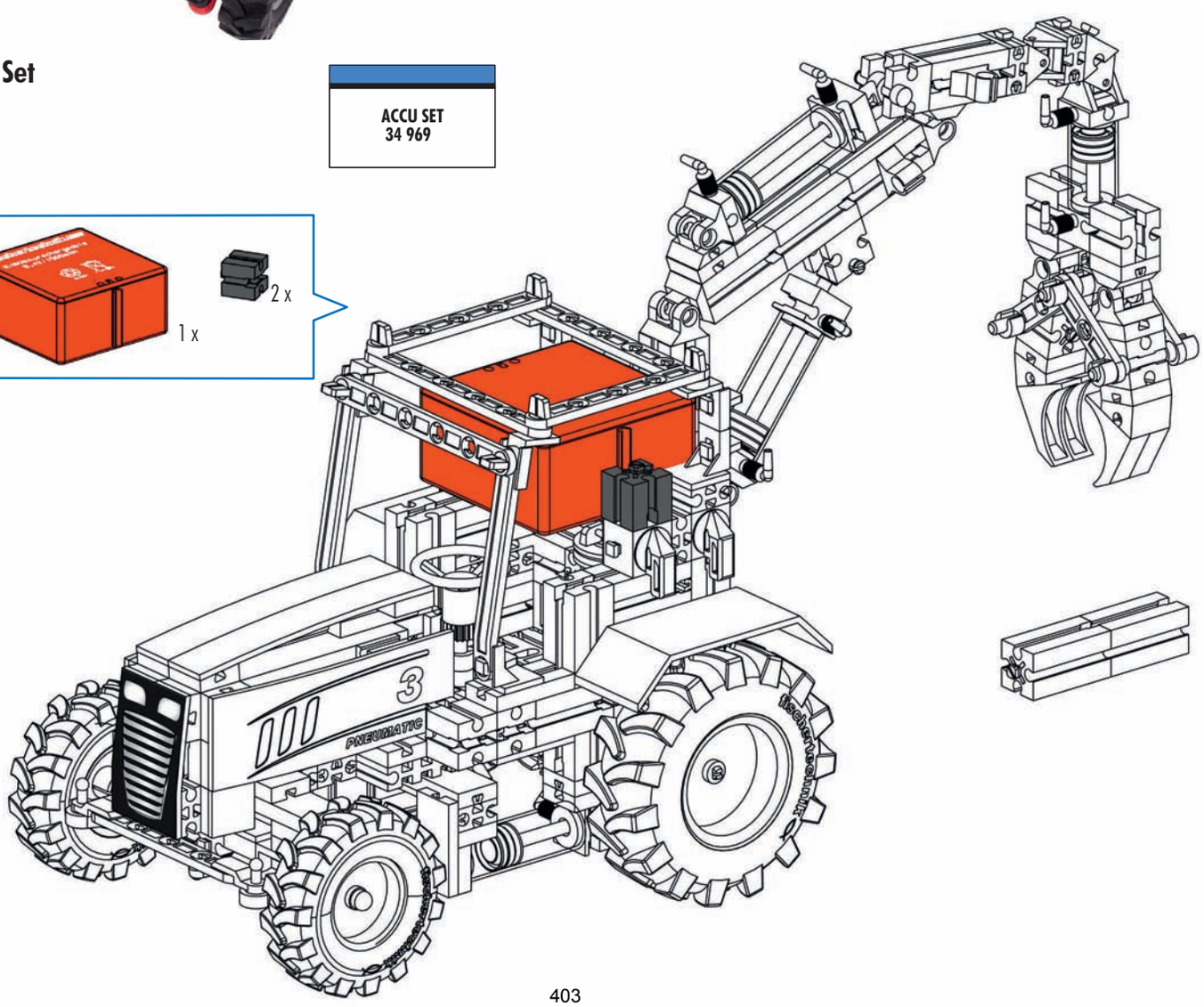

Bagger
Excavator
Tracteur à godet
Baggermachine
Excavadora
Escavadeira
Escavatore
Экскаватор
挖掘机

1-25

Seite 26
Page 26
Page 26
Bladzijde 26
Página 26
Pagina 26
Pagina 26
Страница 26
页次 26

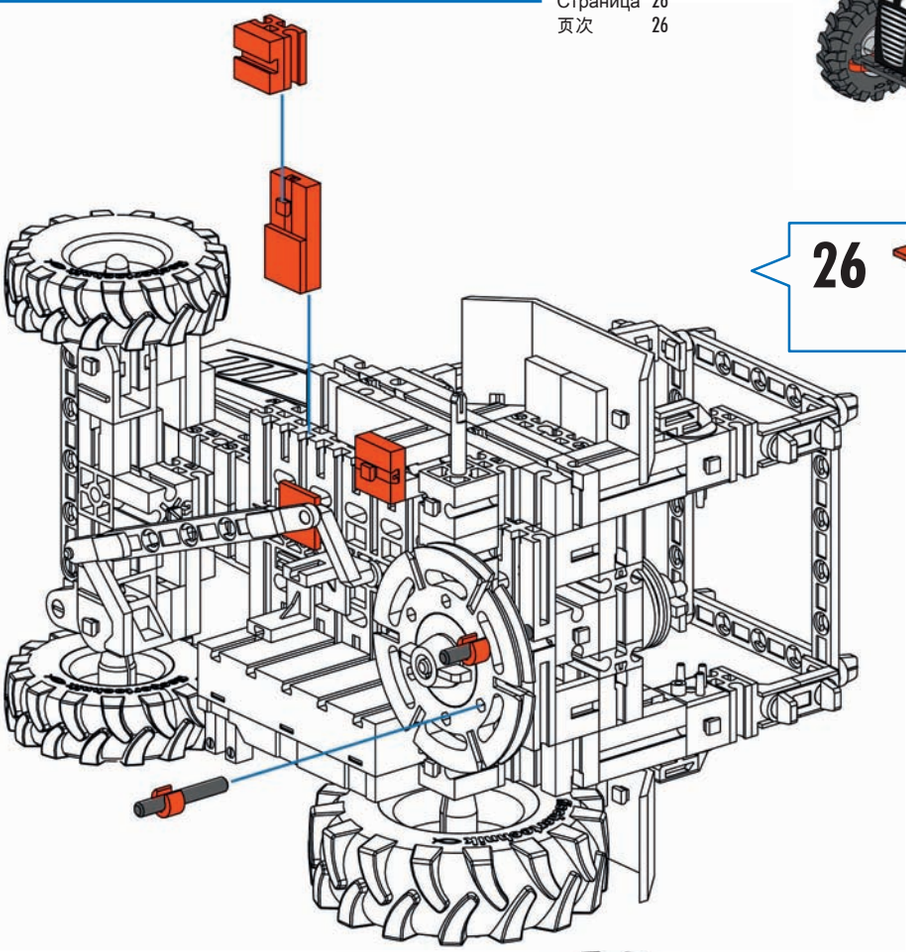

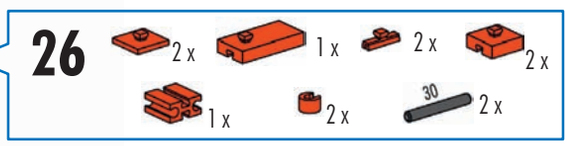

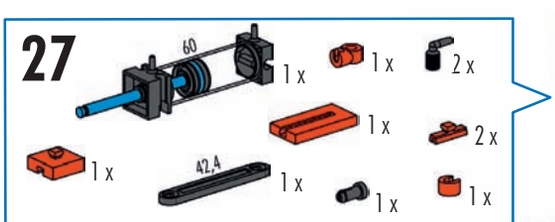

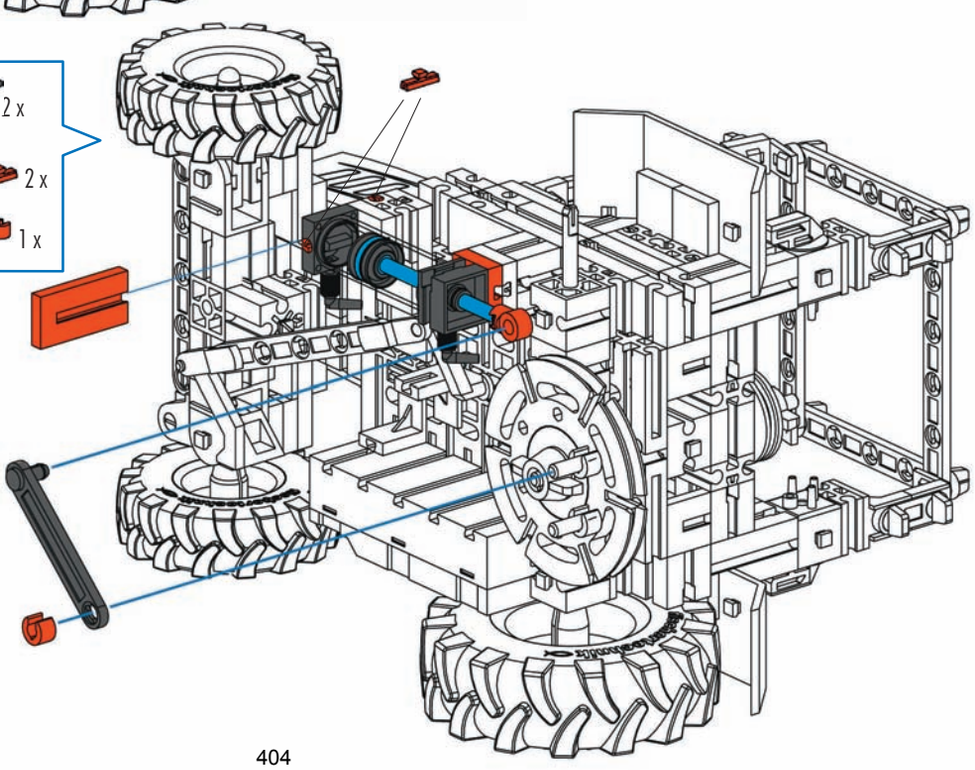

28

3 x 1 x 1 x 1 x 2 x 1 x 1 x

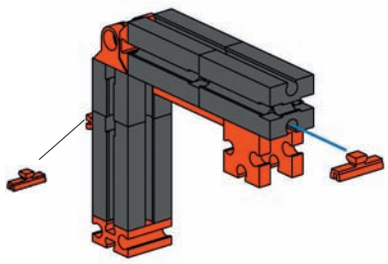

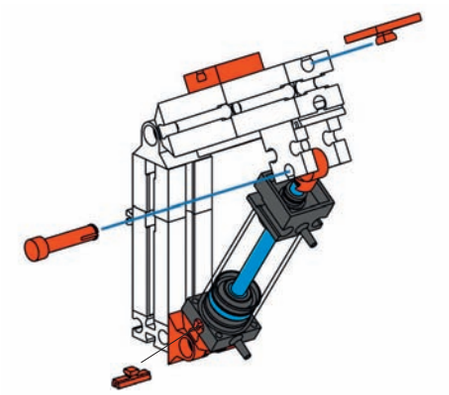

29

1 x 1 x 1 x 1 x 1 x 1 x 1 x

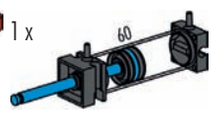

30

1 x 2 x 2 x 1 x 1 x 1 x

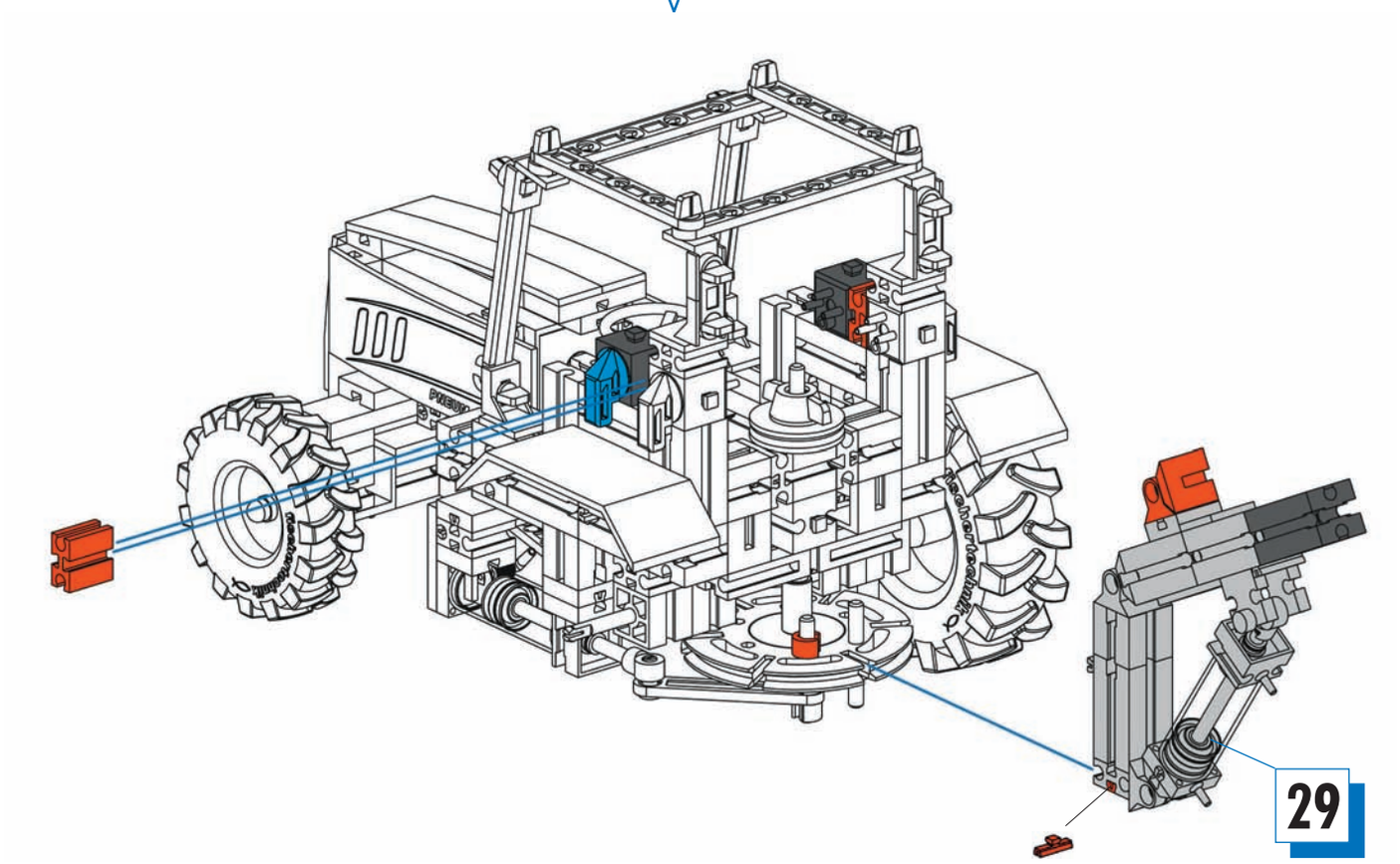

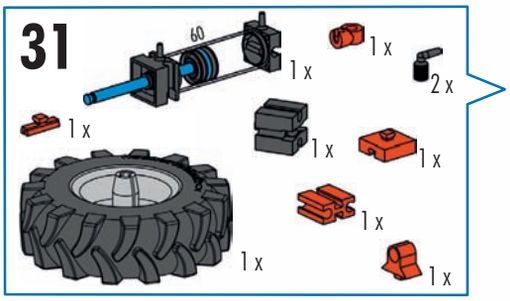
31
60
1 x
1 x
2 x
1 x
1 x
1 x
1 x
1 x
1 x

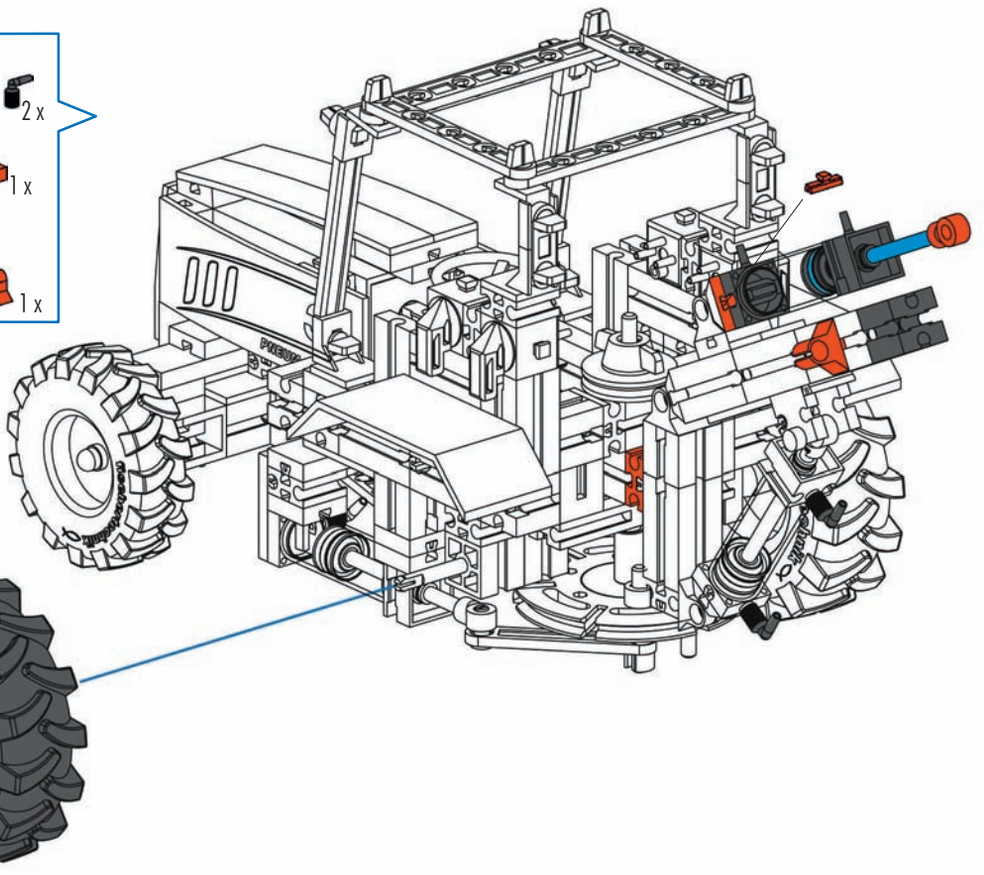

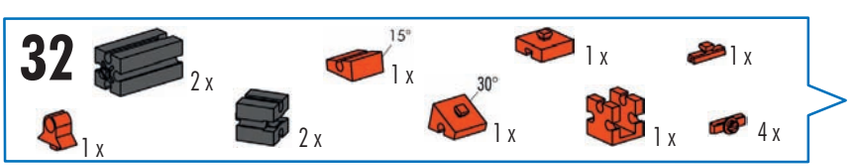
32
2 x
15°
1 x
1 x
1 x
1 x
2 x
30°
1 x
1 x
4 x

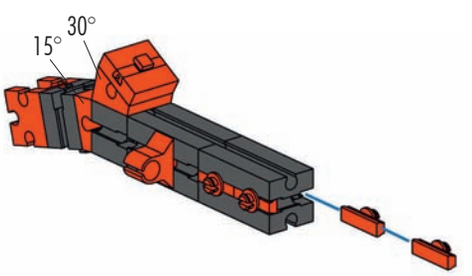
15°
30°

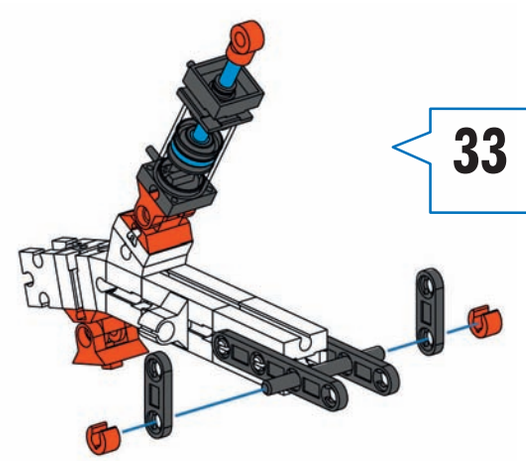

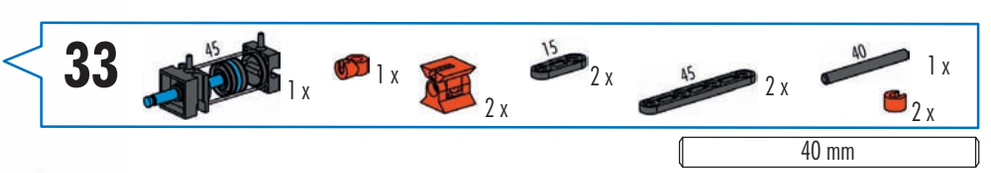
33
45
1 x
1 x
2 x
15
2 x
45
2 x
40
1 x
2 x
40 mm

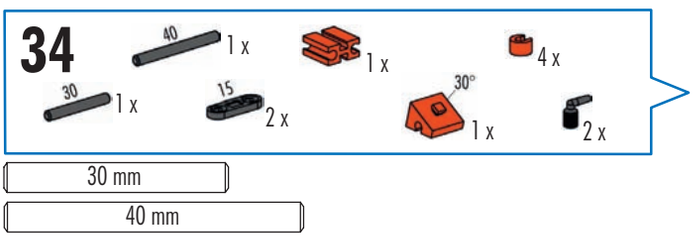
34
40
1 x
1 x
4 x
30
1 x
15
2 x
30°
1 x
2 x
30 mm
40 mm

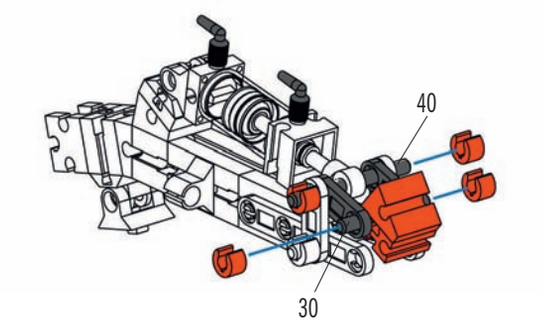
40
30

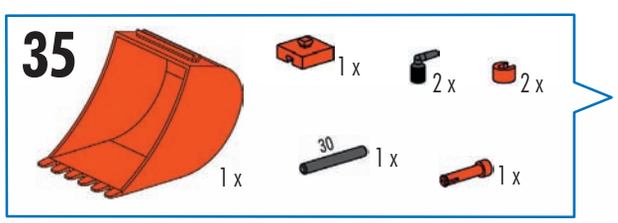
35
1 x
2 x
2 x
30
1 x
1 x
1 x
30 mm

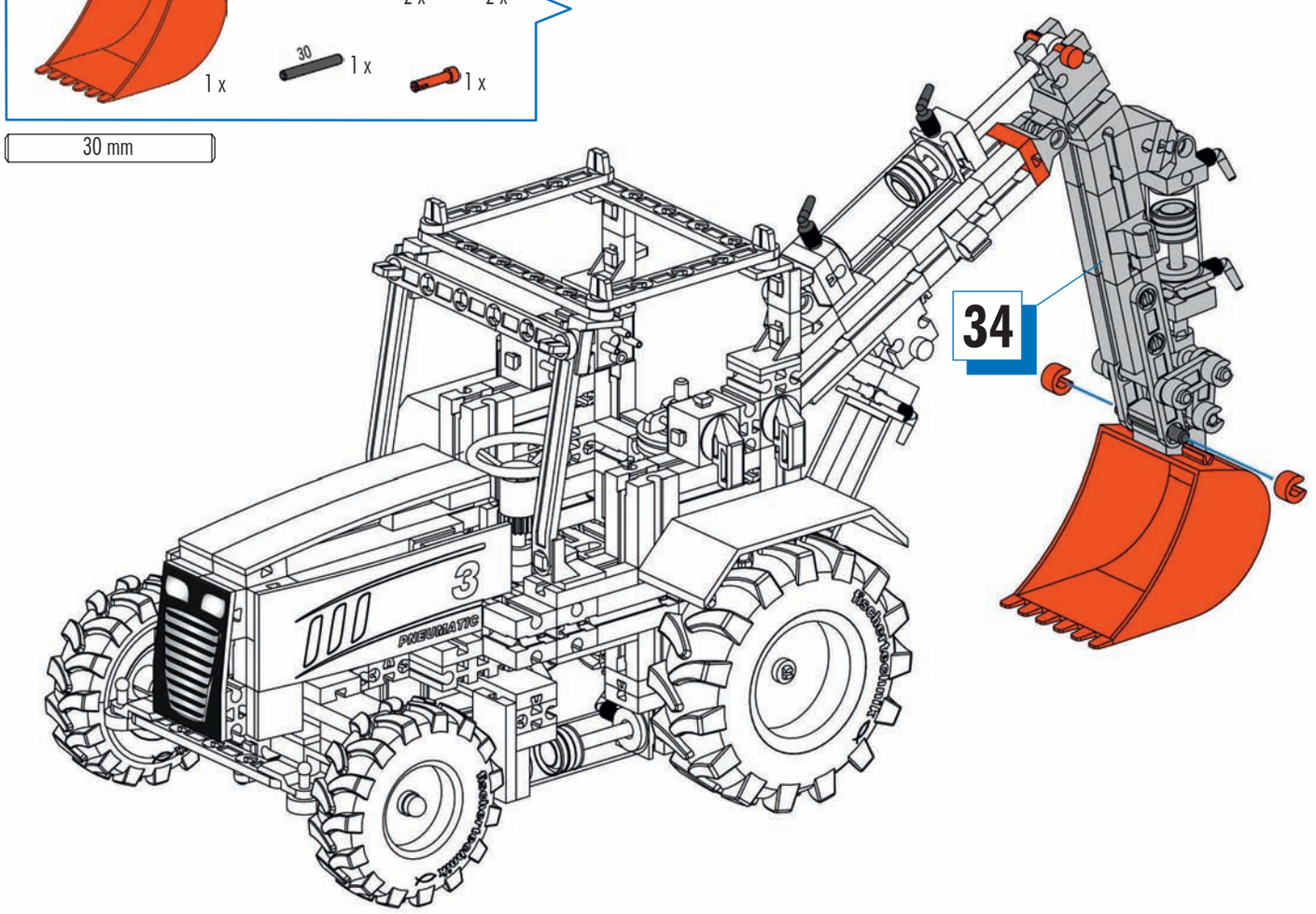
34
3
PNEUMATIC

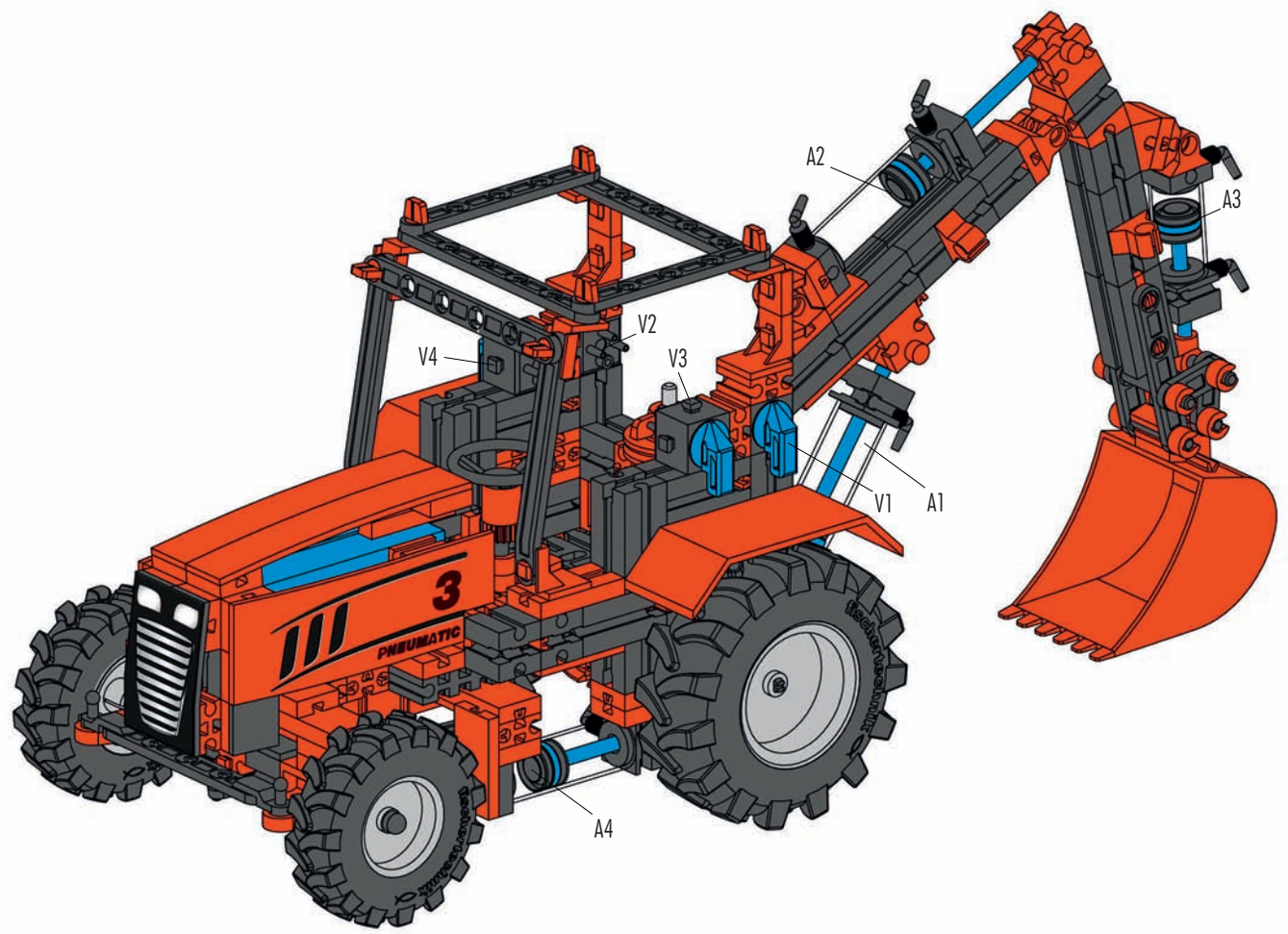

Schlauchanschlussplan
Air line layout plan
Plan de raccordement de conduits

Aansluitschema van slang
Racor de empalme
Plano de conexão de mangueira

Schema di allacciamento tubi
Схема подключения шлангов
软管连接图

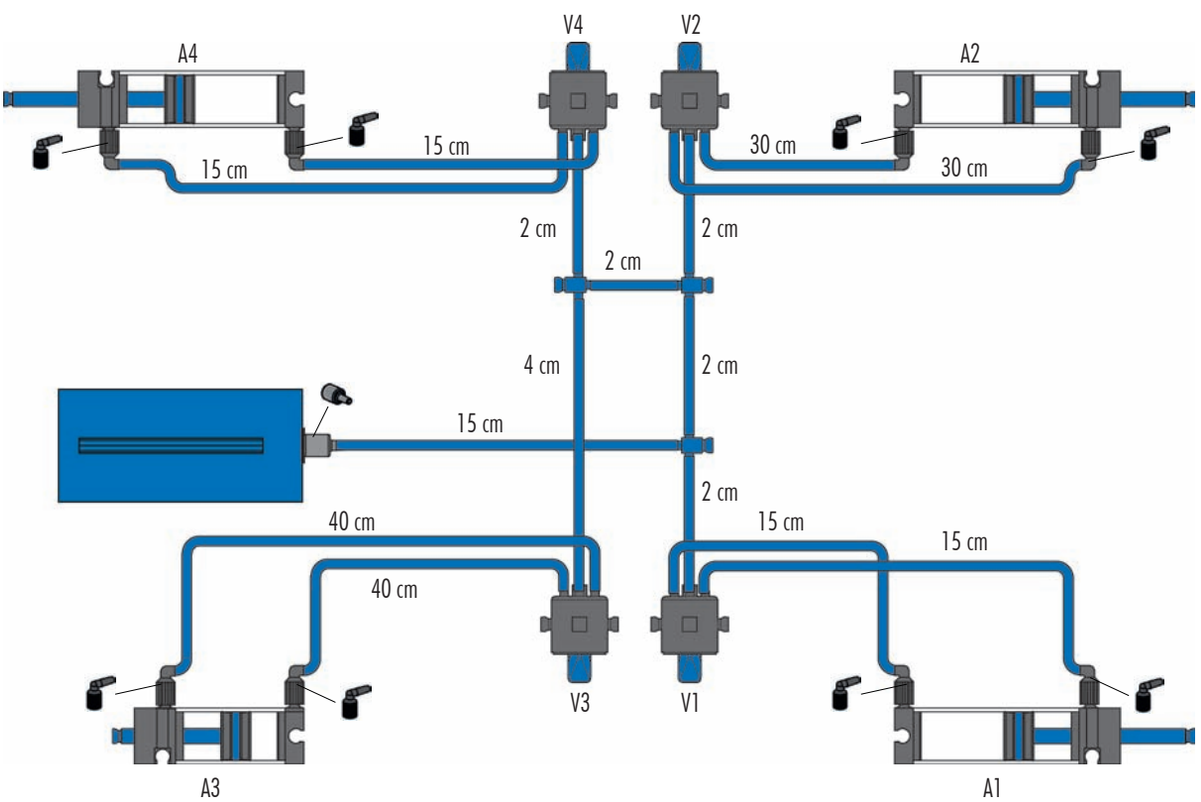

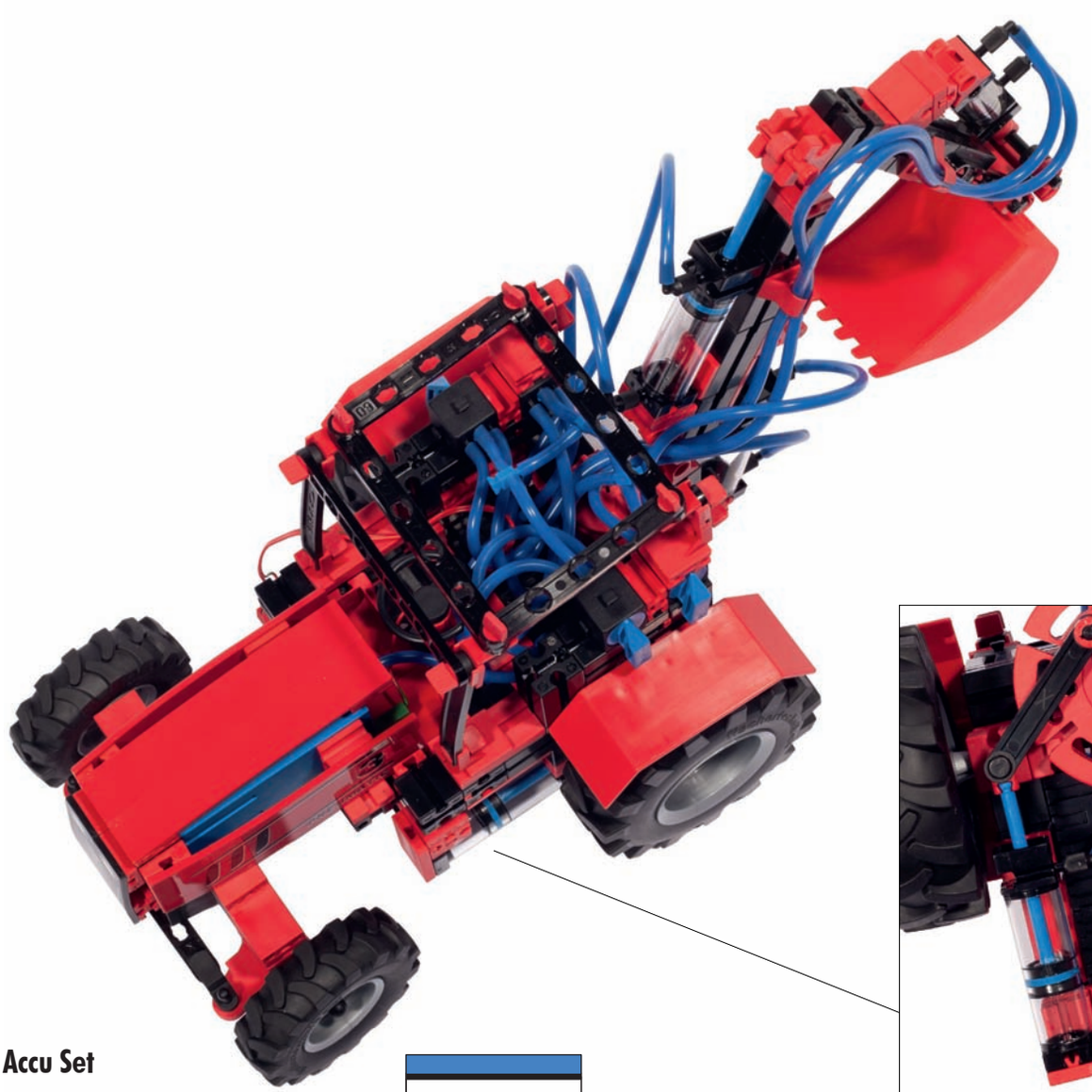

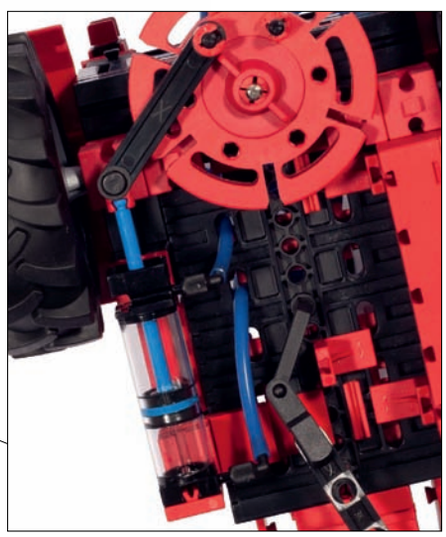

Accu Set

ACCU SET
34 969

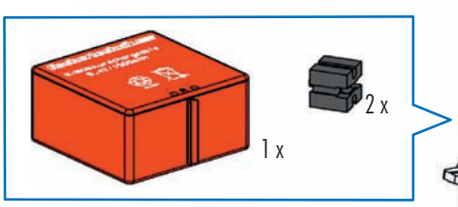

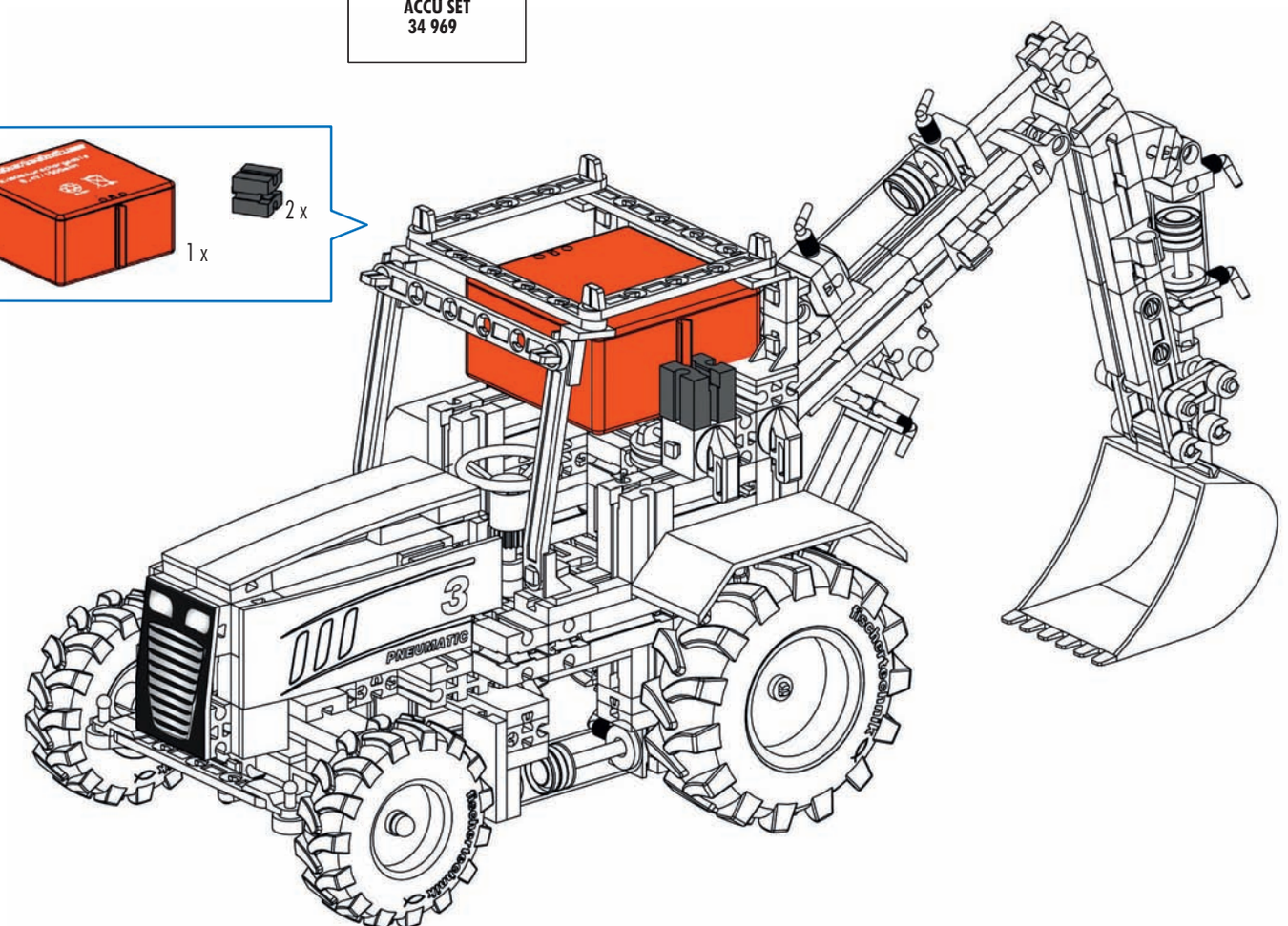

fischertechnik

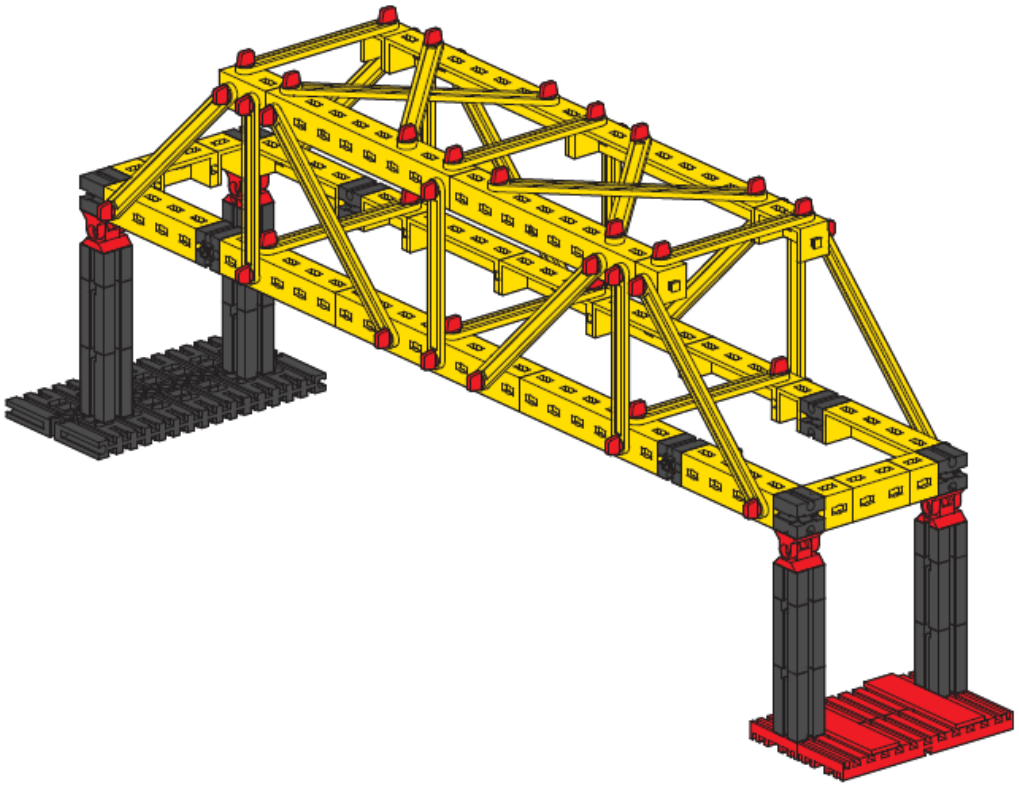

Mechanics and Statics

Inhalt
Contents
Contenu

Inhoud
Contenido
Conteúdo

Contenuto
Содержание
目录

Einzelteilübersicht / Spare parts list / Liste des pièces détachées / Onderdelenoverzicht / Lista da piezas / Resumo de peça individual / Singoli componenti / Отдельные детали / 零件概览 2

Montagetipps / Tips for assembly / Tuyaux pour le montage / Montagetips / Consejos para el montaje / "Dicas" para montagem / Consigli per il montaggio / Советы по сборке / 装配建议 4

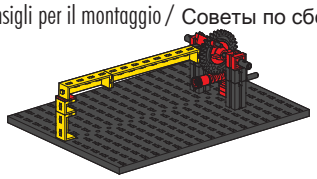

Schranke / Bar / Barrière / Slagboom / Barrera / Barreira / Barriera / Шлагбаум / 栅栏 6

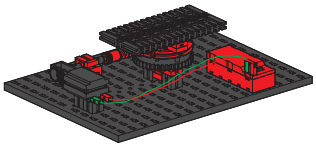

Drehtisch / Turntable / Plateau rotatif / Draaitafel / Mesa giratoria / Mesa rotatória / Tavola rotante / Поворотный стол / 转台 9

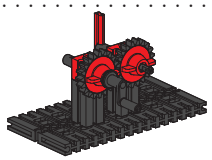

Kurbelgetriebe 1 / Crank gear 1 / Mécanisme à manivelle 1 / Krukasoverbrenging 1 / Mecanismo de manivela 1 / Engrenagem de manivela 1 / Ingranaggio a manovella 1 / Кривошипный механизм 1 / 曲柄传动机构 1 . 12

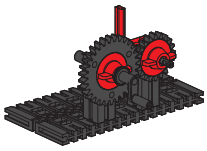

Kurbelgetriebe 2 / Crank gear 2 / Mécanisme à manivelle 2 / Krukasoverbrenging 2 / Mecanismo de manivela 2 / Engrenagem de manivela 2 / Ingranaggio a manovella 2 / Кривошипный механизм 2 / 曲柄传动机构 2 13

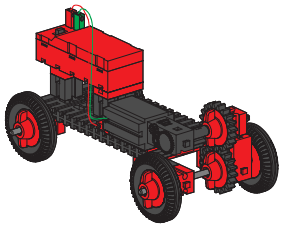

Fahrzeug 1 / Vehicle 1 / Véhicule 1 / Voertuig 1 / Vehículo 1 / Veículo 1 / Veicolo 1 / Автомобиль 1 / 1号汽车 14

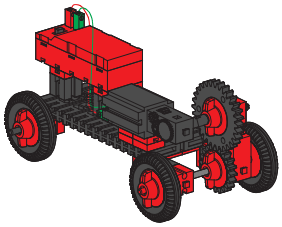

Fahrzeug 2 / Vehicle 2 / Véhicule 2 / Voertuig 2 / Vehículo 2 / Veículo 12 / Veicolo 2 / Автомобиль 2 / 2号汽车 17

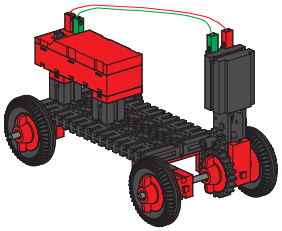

Fahrzeug 3 / Vehicle 3 / Véhicule 3 / Voertuig 3 / Vehículo 3 / Veículo 3 / Veicolo 3 / Автомобиль 3 / 3号汽车 19

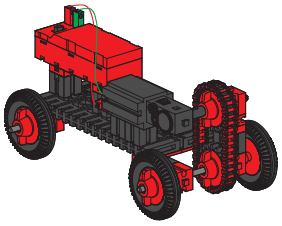

Zahnradgetriebe mit Ketten / Toothed gearing with chains / Transmission par engrenage avec chaîne / Tandwieloverbrenging met kettingen / Engranaje de ruedas dentadas con cadenas / Engrenagem de rodas dentadas com correntes / Trasmissione a ingranaggi con catene / Зубчатая передача с цепями / 带有链条的齿轮传动机构 20

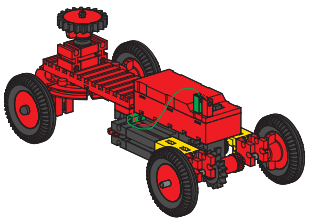

Fahrzeug mit Lenkung / Vehicle with steering / Véhicule avec direction / Voertuig met besturing / Vehículo con dirección / Veículo com direção / Veicolo con sterzo / Автомобиль с рулевым управлением / 带有转向装置的汽车 22

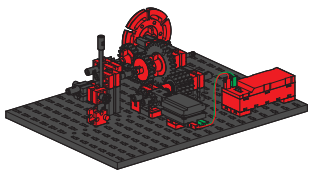

Schaltgetriebe / Gearbox / Mécanisme intermittent / Schakeloverbrenging / Cambio de velocidades / Caixa de câmbio / Cambio meccanico / Коробка передач / 变速器 25

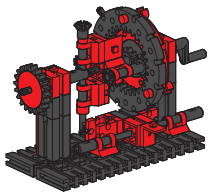

Planetengetriebe / Planetary gear / Engrenage planétaire / Planeetwieloverbrenging / Engranaje planetario / Engrenagem planetária / Rotismo epicicloidale / Планетарный редуктор / 行星齿轮机构 30

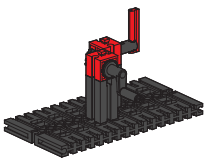

Kegelradgetriebe / Bevel gear / Engrenage à pignon conique / Conische tandwieloverbrenging / Engranaje de ruedas cónicas / Engrenagem cónica / Ingranaggio conico / Конический редуктор / 锥齿轮传动机构 33

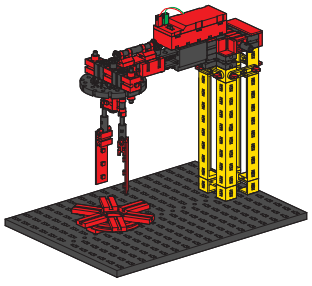

Küchenmaschine / Kitchen appliance / Robot ménager / Keukenmachine / Máquina de cocina / Máquinas de cozinha / Robot da cucina / Кухонный комбайн / 电动厨具 34

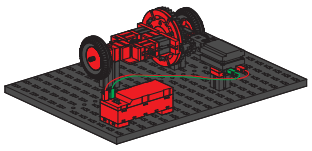

Differentialgetriebe / Differential gear / Engrenage différentiel / Differentieel / Engranaje diferencial / Transmissão diferencial / Differenziale / Дифференциал / 差速机构 41

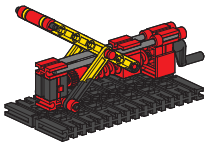

Wagenheber / Car jack / Cric / Wagenkrik / Gato / Macaco / Cric / Подъемник / 车辆升降机 45

Inhalt
Contents
Contenu

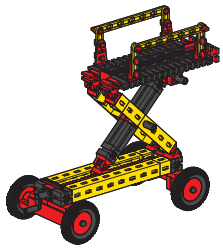

Scherenhubtisch / Scissor elevating platform / Plate-forme mobile à ciseaux / Schaarheftafel / Mesa elevadora de pantógrafo / Plataforma com mecanismo de pantógrafo / Piattaforma a pantografo / Ножничный подъемный стол / 剪式升降台 47

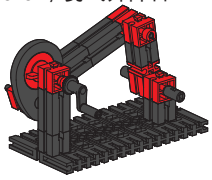

Viergelenkkette / Four-bar chain / Chaîne cinématique à quatre joints articulés / Vierscharniersmechanisme / Mecanismo de cuatro articulaciones / Corrente de quatro articulações / Catena a quattro articolazioni / Четырехзвенный шарнирный механизм / 四活节链 61

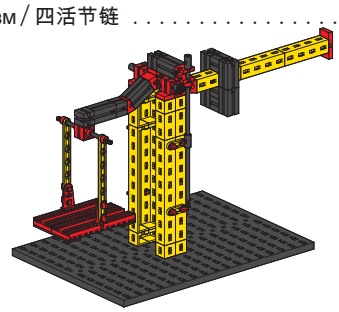

Waage mit Laufgewicht / Scales with sliding weight / Balance à poids mobile / Weegschaal met schuifgewicht / Balanza con pesa corrediza / Balança com peso cursor / Bilancia con cursore / Весы с подвижным грузом / 带滑动秤锤的天平 71

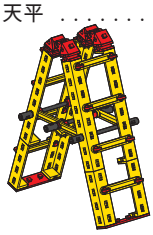

Bockleiter / Double ladder / Echelle double /Trapladder / Escalera de tijera / Escada de cavalete / Scala a libro / Стремянка / 人字梯 89

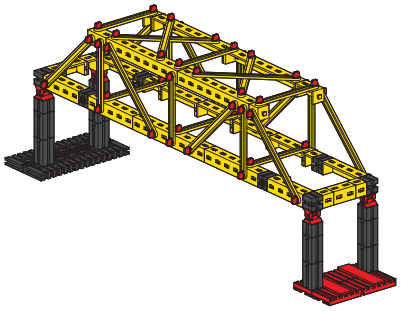

Brücke mit Oberzug / Bridge with Upperbeam / Pont à membrure supérieure transversale / Brug met bovenslagbalken / Puente con viga testera /Ponte com viga de sustentação superior / Ponte con trave superiore / Мост с верхней рамой / 带上托梁的桥 97

Inhoud
Contenido
Conteúdo

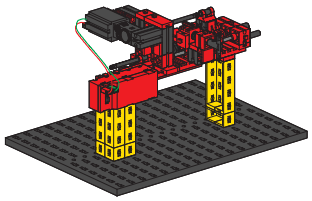

Drehmaschine / Lathe / Tour / Draaibank / Torno / Torno / Tornio / Токарный станок / 车床 51

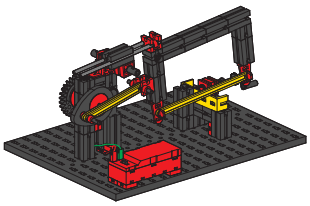

Bügelsäge / Power hacksaw machine / Scie à archet / Beugelzaag / Sierra de arco / Serra de arco / Seghetto ad arco / Ножовка / 弓锯 62

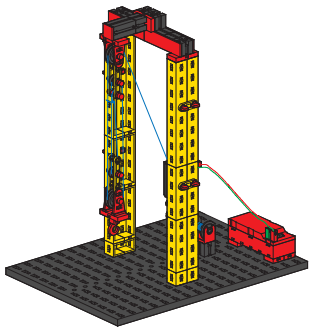

Flaschenzug / Lifting tackle / Palan / Takel / Polipasto / Talha / Paranco / Таль / 滑轮组 76

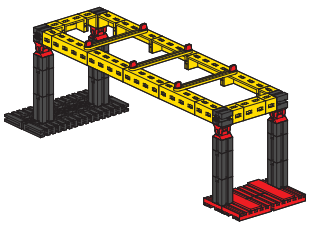

Balkenbrücke / Girder Bridge / Pont à poutres droites / Balkenbrug / Puente de vigas / Ponte de travessa / Ponte a trave / Балочный мост / 梁式桥 92

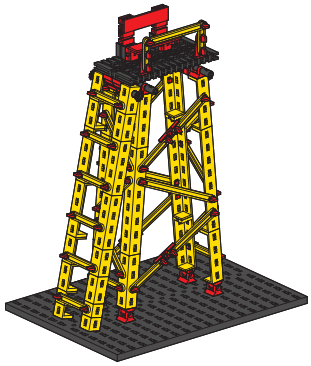

Hochsitz / High hunting stand / Mirador / Jachtkansel / Puesto elevado / Assento elevado / Sedile alto / Охотничья вышка / 高脚凳 102

Contenuto
Содержание
目录

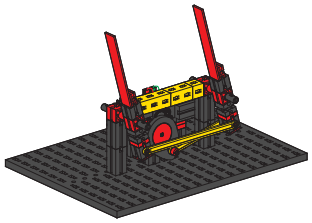

Scheibenwischer / Windshield wiper / Essuie-glace / Ruitenwisser / Limpiaparabrisas / Para-brisas / Tergicristallo / Стеклоочистители / 刮雨器 57

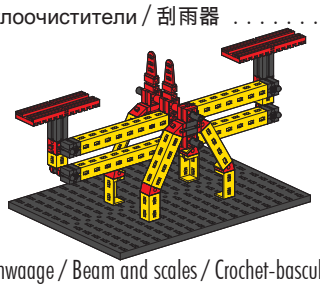

Balkenwaage / Beam and scales / Crochet-bascule / Balansweegschaal / Balanza de brazos / Balança de pratos / Bilancia a braccio / Весы с коромыслом / 天平 . . 67

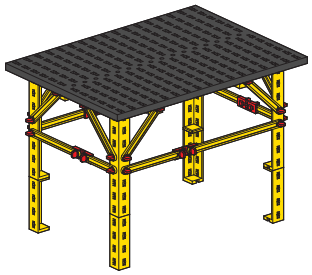

Tisch / Table / Table / Tafel / Mesa / Mesa / Tavola / Стол / 工作台 86

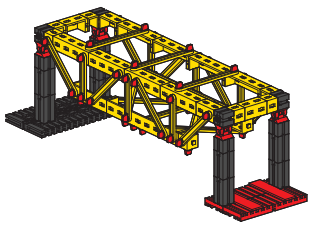

Brücke mit Unterzug / Bridge with Underbeam / Pont avec solive transversale / Brug met onderslagbalken / Puente con viga maestra / Ponte com viga de sustentação inferior / Ponte con trave inferiore / Мост с нижней рамой / 带下托梁的桥 95

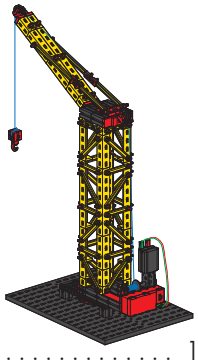

Kran / Crane / Grue / Kraan / Grúa / Guindaste / Gru / Кран / 起重机 109

Einzelteilübersicht
Spare parts list
Liste des pièces détachées

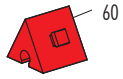	31 010 4 x
	31 011 4 x
	31 018 4 x
	31 019 1 x
	31 021 2 x
	31 022 1 x
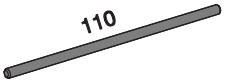	31 031 2 x
	31 032 1 x
	31 058 6 x
	31 060 14 x
	31 061 2 x
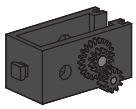	31 078 1 x
	31 082 1 x
	31 336 2 x
	31 337 2 x
	31 426 5 x
	31 436 11 x
	31 597 6 x
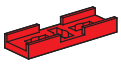	31 667 4 x
	31 690 5 x
	31 848 3 x
	31 915 1 x
	31 982 8 x
	31 983 2 x
	32 064 9 x
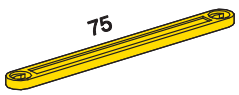	32 200 12 x
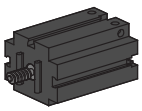	32 293 1 x
	32 316 2 x
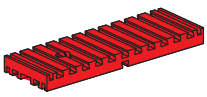	32 859 2 x
	32 869 1 x
	32 870 4 x
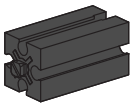	32 879 13 x
	32 881 10 x
	32 882 4 x
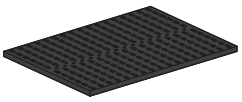	32 985 1 x
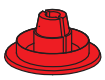	35 031 6 x
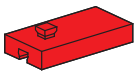	35 049 6 x
	35 053 4 x
	35 059 12 x
	35 061 3 x
	35 062 2 x
	35 063 2 x
	35 064 3 x
	35 065 2 x
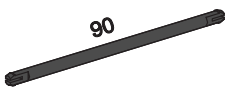	35 066 2 x
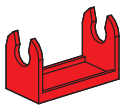	35 069 1 x
	35 070 1 x
	35 073 6 x
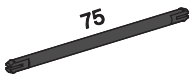	35 087 3 x
	35 088 1 x
	35 113 1 x
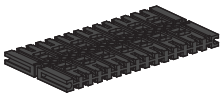	35 129 1 x
	35 466 1 x
	35 694 1 x
	35 695 4 x
	35 797 2 x
	35 945 6 x
	35 973 1 x
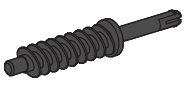	35 977 1 x
	36 227 2 x

Onderdelenoverzicht
Lista da piezas
Resumo de peça individual

Singoli componenti
Отдельные детали
零件概览

Einzelteilübersicht
Spare parts list
Liste des pièces détachées

Onderdelenoverzicht
Lista da piezas
Resumo de peça individual

Singoli componenti
Отдельные детали
零件概览

	36 248 38 x	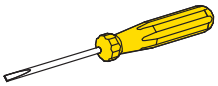	36 443 1 x	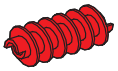	37 926 3 x	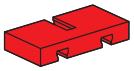	38 428 5 x
	36 264 1 x		36 819 7 x		38 225 1 x	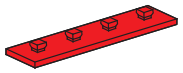	38 464 4 x
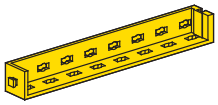	36 294 4 x		36 977 1 x		38 240 4 x	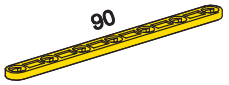	38 531 2 x
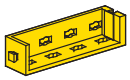	36 297 12 x		37 237 10 x		38 242 1 x		38 538 4 x
	36 298 6 x		37 238 2 x	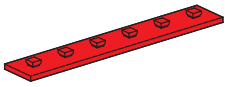	38 245 2 x		38 541 4 x
	36 299 8 x		37 468 5 x		38 246 4 x		38 542 4 x
	36 323 76 x		37 527 1 x		38 258 2 x		38 544 4 x
	36 326 16 x		37 636 2 x		38 260 4 x	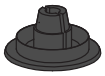	68 535 1 x
	36 328 12 x		37 679 8 x		38 277 1 x	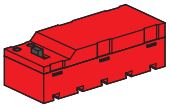	135 719 1 x
	36 334 1 x	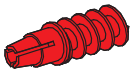	37 858 1 x		38 414 2 x		
	36 335 2 x		37 925 1 x		38 423 5 x		

Montagetipps
Tips for assembly
Tuyaux pour le montage

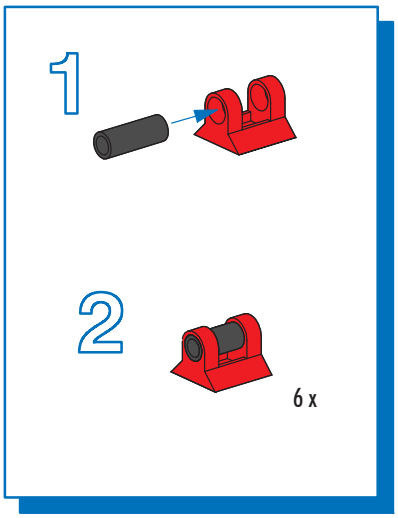

Montagetips
Consejos para el montaje
"Dicas" para montagem

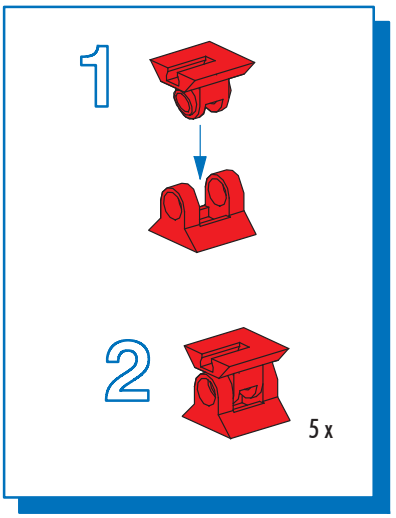

Consigli per il montaggio
Советы и рекомендации по сборке
装配建议

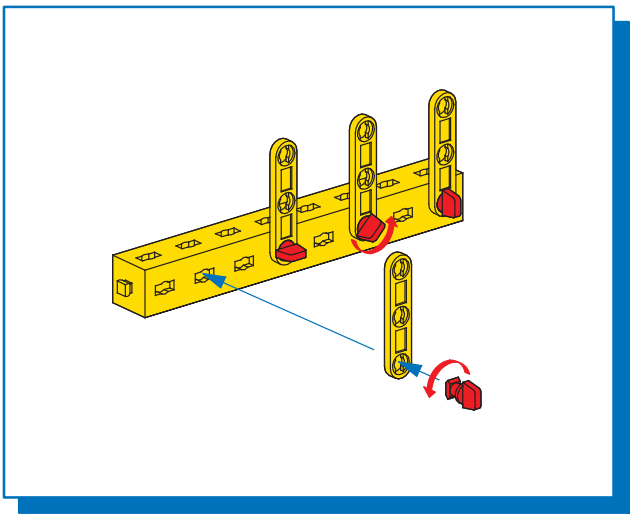

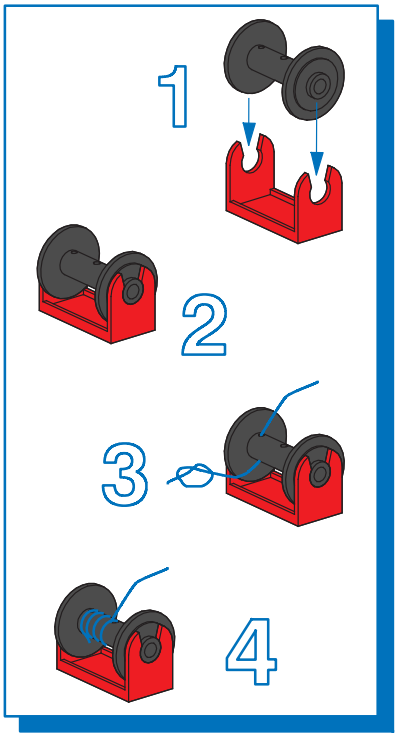

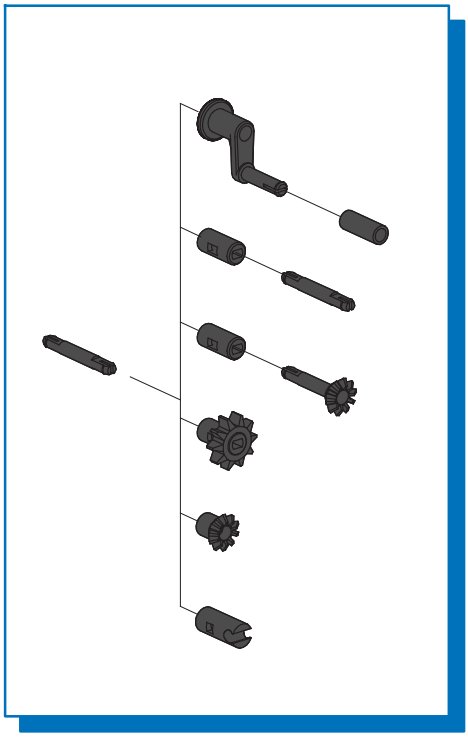

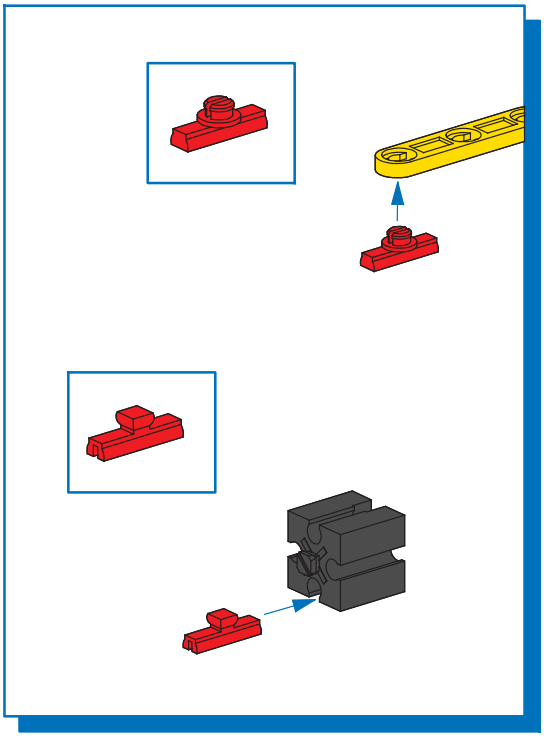

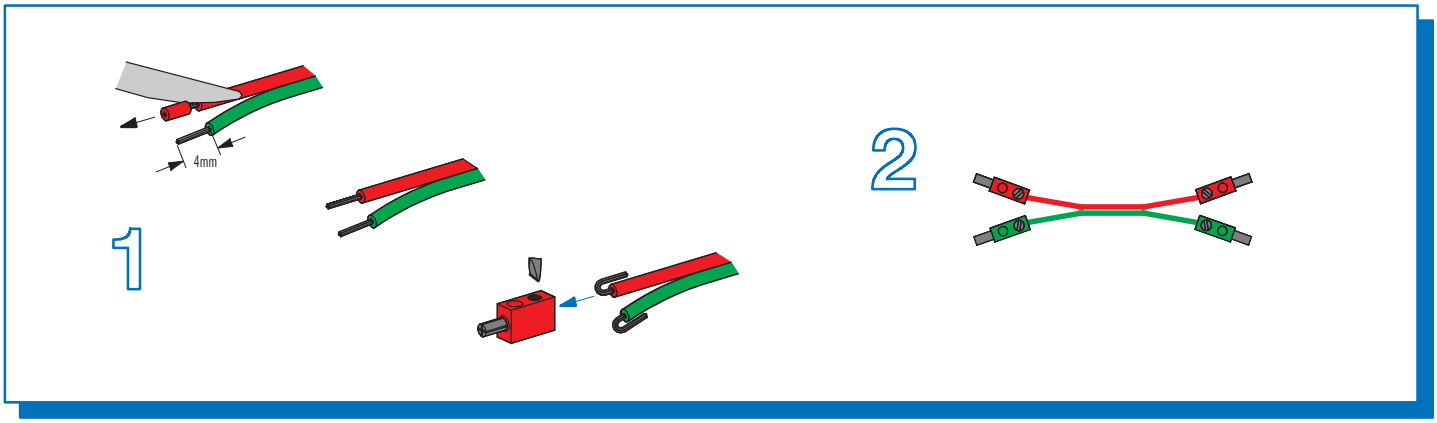

Sicherheitshinweise
Safety Information
Consignes de sécurité
Veiligheidsrichtlijnen
Indicaciones de seguridad
Observações sobre segurança
Informazioni per la sicurezza
Указания по технике безопасности
安全指南

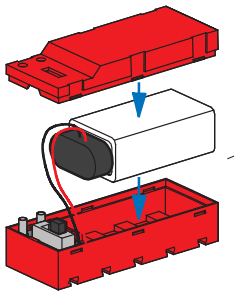

Batterie ist nicht Inhalt der Packung
Battery not included
Batterie non comprise
De batterij wordt niet meegeleverd
La bateria no está incluida en el suministro
A bateria não é o conteúdo da embalagem
La batteria non è inclusa nella confezione
Батарея в комплект не входит
包装中不含电池

1 Batterie 9Volt-Block Alkaline oder 1 NiMH-Akku 9V

- Nicht wiederaufladbare Batterien dürfen nicht geladen werden
- Aufladbare Batterien dürfen nur von Erwachsenen geladen werden
- Aufladbare Batterien sind aus dem Batteriehalter herauszunehmen, bevor sie geladen werden.
- Batterien müssen mit der richtigen Polarität eingelegt werden.
- Leere Batterien müssen aus dem Spielzeug herausgenommen werden
- Die Anschlussklemmen dürfen nicht kurzgeschlossen werden.
- Verbrauchte Batterien dem Sondermüll zuführen.
- Drähte nicht in Steckdose einführen!
- Ladegerät regelmäßig auf Schäden überprüfen.Bei einen Schaden darf das Ladegerät bis zur vollständigen Reparatur nicht mehr verwendet werden.

9V rechargeable battery or 9 V alkaline dry cell

- Do not attempt to charge NON-rechargeable batteries.
- Rechargeable batteries are only to be charged by adults.
- Take rechargeable batteries out of the battery tray before charging them.
- Insert batteries with the correct polarity.
- Remove dead batteries from the toy.
- Do not short circuit the connecting terminals!
- Discard spent dry cells at special waste disposal centre.
- Do not insert the wires into an outlet!
- Regularly inspect battery charger for damage.If the battery charger has been damaged, it should not be used further until fully repaired.

pile 9V où accu 9V

- Il est interdit de recharger des piles qui ne sont pas des accumulateurs
- Le chargement des accumulateurs doit toujours se faire par des adultes
- Retirer les accumulateurs du support de pile avant de les recharger.
- Veiller à la polarité correcte lors de la mise en place des piles.
- Retirer impérativement les piles ou accumulateurs vides du jouet.
- Il est interdit de court-circuiter les bornes de raccordement.
- Jeter les piles usagées dans un conteneur spécial réservé à cet effet.
- Ne pas introduire les fils dans une prise !
- Contrôlez régulièrement le chargeur en vue d'éventuelles détériorations En cas de détérioration, il est interdit d'utiliser le chargeur jusqu'à ce qu'il ait été intégralement réparé

alkaline batterije of oplaadbare batterije (9Volt)

- Niet-oplaadbare batterijen mogen niet worden opgeladen.
- Oplaadbare batterijen mogen uitsluitend door volwassenen worden opgeladen.
- Oplaadbare batterijen moeten uit de batterijhouder worden verwijderd, voordat deze worden opgeladen.
- De batterijen moeten met de juiste polariteit worden geplaatst.
- Lege batterijen moeten uit het speelgoed worden verwijderd.
- De aansluitklemmen mogen niet worden kortgesloten.
- Afleveren gebruikte batterijen bij het klein chemisch afval (KCA).
- Geen draden in de contactdoos steken!
- Laadtoestel regelmatig controleren op schade.Bij schade mag het laadtoestel niet meer gebruikt worden tot het volledig hersteld is.

pila alcalina bloque de 9 Voltios o acumulador NiMH- de 9 Voltios

- Las pilas no recargables no pueden ser cargadas
- Las pilas recargables sólo pueden ser cargadas por un adulto
- Las pilas recargables deben ser extraídas del compartimiento de pilas antes de que sean cargadas.
- Las pilas deben ser colocadas con la polaridad correcta.
- Las pilas descargadas deben ser extraídas del juguete
- Los bornes de conexión no pueden ser puestos en cortocircuito.
- Retirar las baterias viejas, desechándolas en un depósito de basuras especiales.
- No introducir hilos en la toma de corriente!
- Comprobar con regularidad si el cargador presenta daños.En caso de presentar daños, el cargador no debe volver a ser utilizado hasta que esté completamente reparado. i

Bateria alcalina de bloco de 9 V ou acumulador NiMH- de 9 V

- Pilhas não recarregáveis não devem ser novamente carregadas.
- Pilhas recarregáveis somente devem ser recarregadas por adultos.
- Pilhas recarregáveis devem ser retiradas do compartimento de pilhas antes de serem carregadas.
- As pilhas devem ser colocadas com a polaridade correta.
- As pilhas descarregadas devem ser retiradas do brinquedo.
- Os terminais de conexão não devem ser curto-circuitados.
- Eliminar as baterias esgotadas como desperdício perigoso
- Nunca introduzir fios na tomada!
- Verificar regularmente se o carregador apresenta danos.Em caso de dano, o carregador não deverá ser utilizado enquanto não estiver plenamente consertado.

1 batteria alcalina da 9 V o 1 batteria NiMH- ricaricabile da 9V

- Le batterie non ricaricabili non devono essere ricaricate
- Le batterie ricaricabili devono essere ricaricate da persone adulte
- Le batterie ricaricabili si devono estrarre dal supporto prima di ricaricarle.
- Le batterie si devono inserire rispettando la polarità.
- Togliere le batterie dal giocattolo quando sono scariche
- I morsetti di allacciamento non devono essere cortocircuitati.
- Smaltire le batterie usate negli appositi contenitori per la raccolta differenziata.
- Non inserire i fili nella presa elettrica.
- Controllare periodicamente se il caricabatterie presenta dei danni.In caso di danni, il caricabatterie non deve più essere utilizzato fino alla riparazione.

1 алкалиновая батарейка на 9 В или 1 никель-кадмиевый аккумулятор, 9 В

- Не пытайтесь заряжать неперезаряжаемые батарейки.
- Зарядку перезаряжаемых аккумуляторов разрешается выполнять только взрослым.
- Перед зарядкой перезаряжаемых аккумуляторов извлеките их из аккумуляторного отсека.
- При установке аккумуляторов на место соблюдайте полярность.
- Разряженные батарейки необходимо извлечь из игрушки.
- Не замыкайте накоротко соединительные клеммы.
- Использованные батареи утилизовать как спецотходы.
- Не вставляйте в розетку провода!
- Регулярно проверяйте зарядное устройство на отсутствие повреждений.При налиРии повреждений использовать зарядное устройство до выполнения его полного ремонта не разрешается.

1 个 9V 的碱性方电池或 1 个 9V 的 NiMH- 蓄电池

- 不得给非充电电池充电
- 只允许由成年人给充电电池充电
- 在充电前必须将充电电池从电池夹中取出。
- 必须按照正负极正确放入电池。
- 必须从玩具中取出没有电的电池
- 接线柱不允许被短路。
- 用完了的电池应作为特种垃圾处理。
- 禁止将金属丝插入插座！
- 经常检查充电器是否有损坏情况。如果充电器有损，直到完全修好为止不 可以再使用。

Alle Einzelteile, insbesondere bewegliche Teile sind falls notwendig zu warten und zu reinigen.
All components, especially moving parts, should be maintained and cleaned as necessary.
Toutes les pièces détachées et en particulier les pièces mobiles, sont, si nécessaire, à entretenir et à nettoyer.
Alle onderdelen, vooral de bewegende delen, kunnen, indien noodzakelijk, onderhouden en gereinigd worden.
Es necesario limpiar y mantener en buen estado todas las diferentes piezas - especialmente las piezas móviles.
Caso necessário, todas as peças individuais, especialmente peças móveis, tem que ser submetidas à manutenção e ser limpadas.
Se necessario, tutti i singoli componenti, soprattutto le parti mobili, si devono eventualmente sottoporre a manutenzione e pulizia.
Все детали конструктора, в особенности его подвижные части, необходимо содержать в исправности и очищать их по мере необходимости.
必要时应保养和清洁所有零件，尤指运动部件。

Achtung: Verletzungsgefahr an Bauteilen mit funktionsbedingten scharfen Kanten und Spitzen!
Caution: Be careful not to hurt yourself on components with sharp or pointed edges!
Attention: Risque de blessure sur les élements comportant des arêtes et o pointes vives indispensables au bon fonctionnement!
Let op: U kunt zich bezeren aan bouwstenen met sherpe randen of punten!
Attenzione: Esiste il pericolo di lesione con i pezzi di costruzione che hanno bordi e punte spigolosi necessari per la funzionalita del pezzo!
Atenção: Perigo de ferimentos em peças componentes com cantos vivos e pontas obrigatórios para o funcionamento !
Attenzione: Pericolo di lesioni dovute a componenti con spigoli vivi e punte per motivi funzionali!
Внимание!: Во избежание травм, будьте внимательны при обращении с острыми деталями!
注意: 因功能需要而带有锋利的棱边和尖角的部件可能会带来受伤危险！

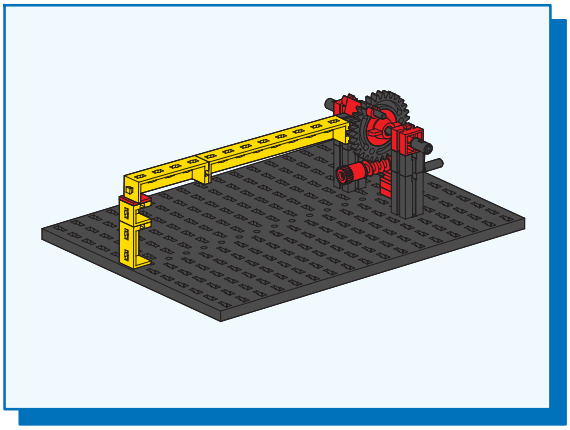

Schranke
Bar
Barrière

Slagboom
Barrera
Barreira

Barriera
Шлагбаум
栅栏

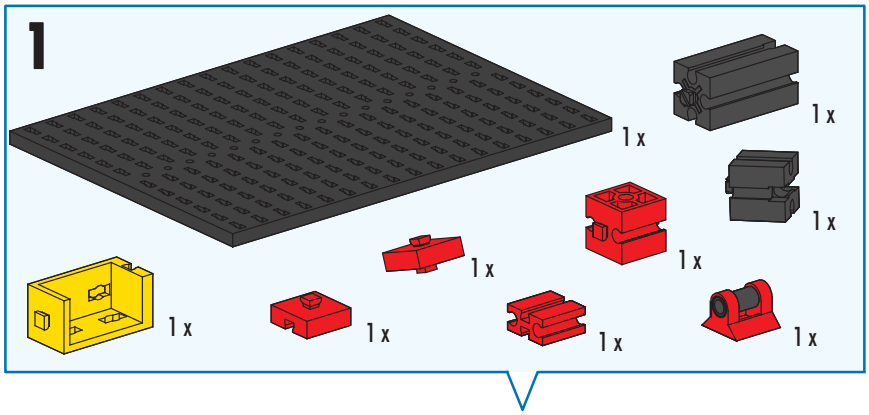

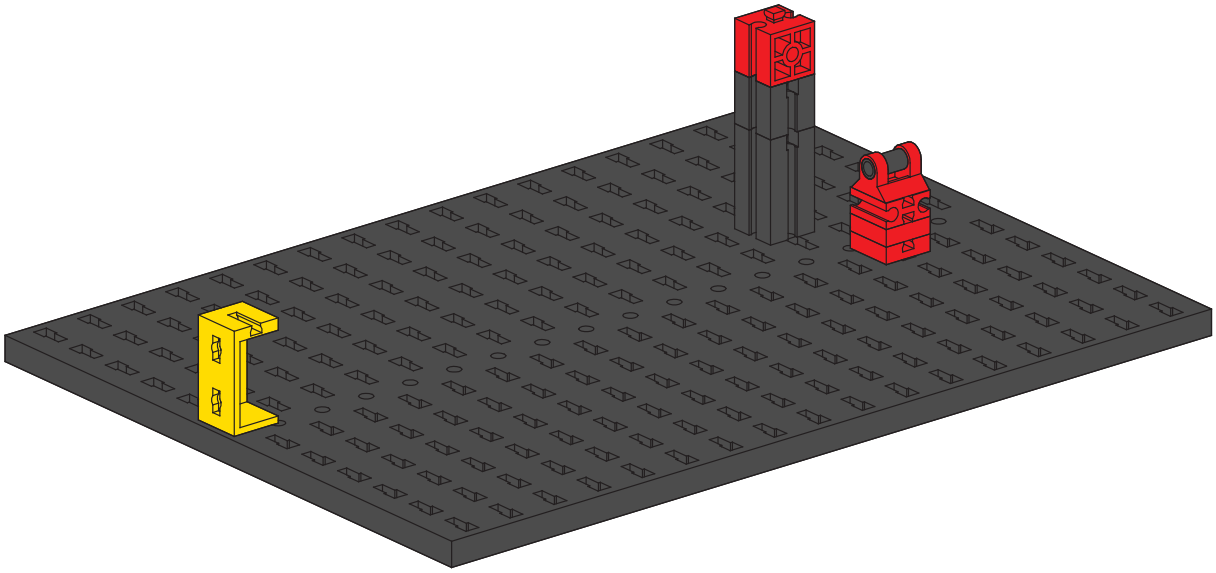

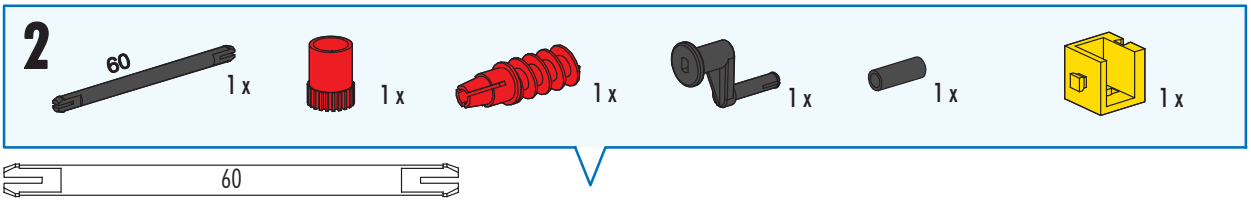

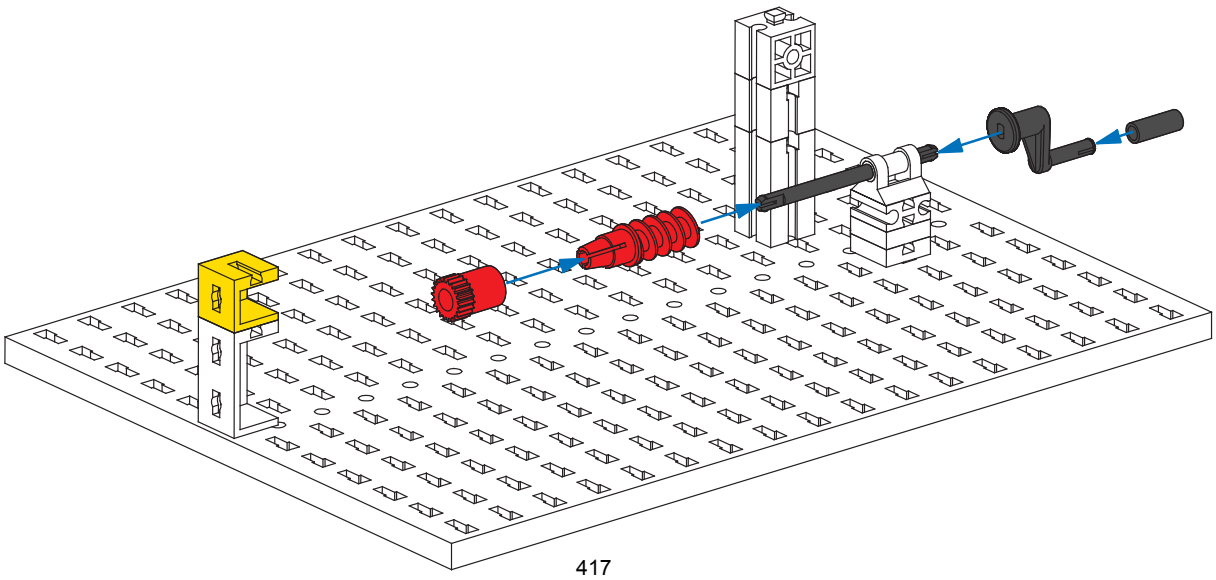

417

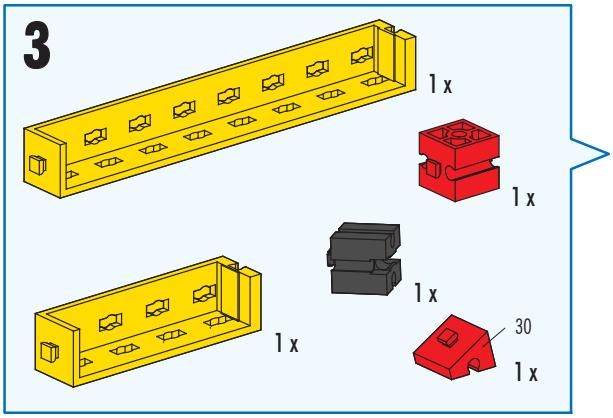
3
1 x
1 x
1 x
1 x
30
1 x

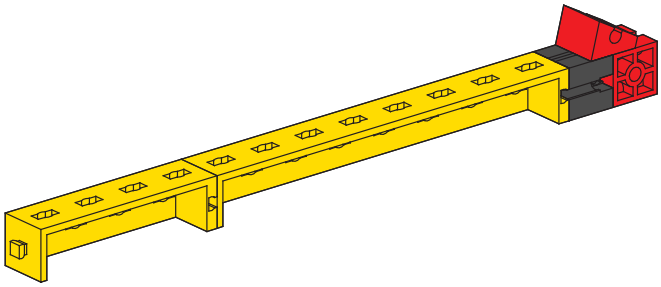

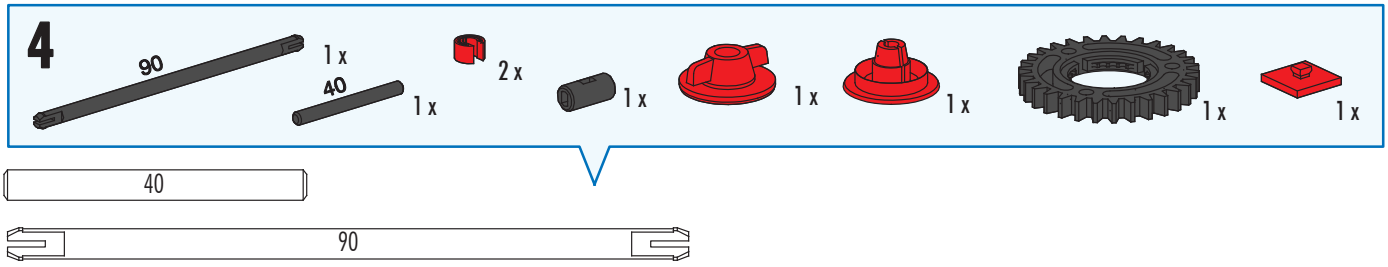
4
90
1 x
40
1 x
2 x
1 x
1 x
1 x
1 x
1 x

40
90

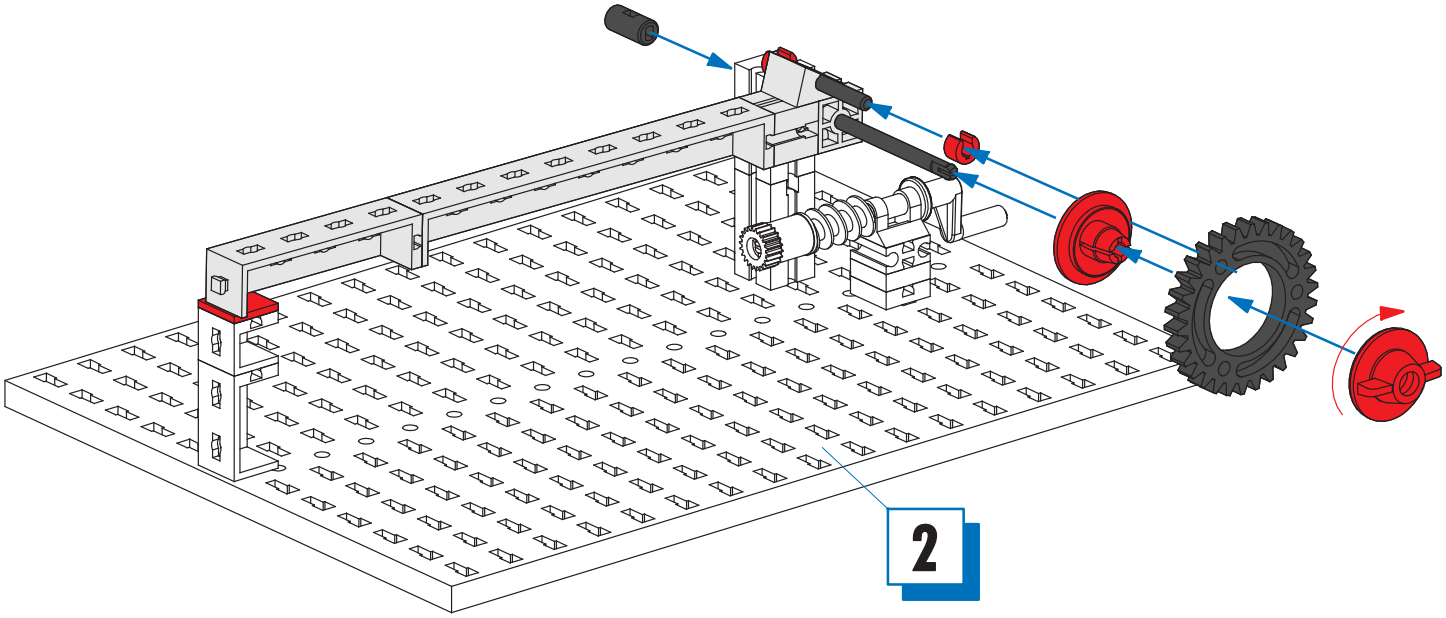
2

5

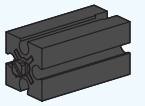
1 x

1 x

1 x

1 x

1 x

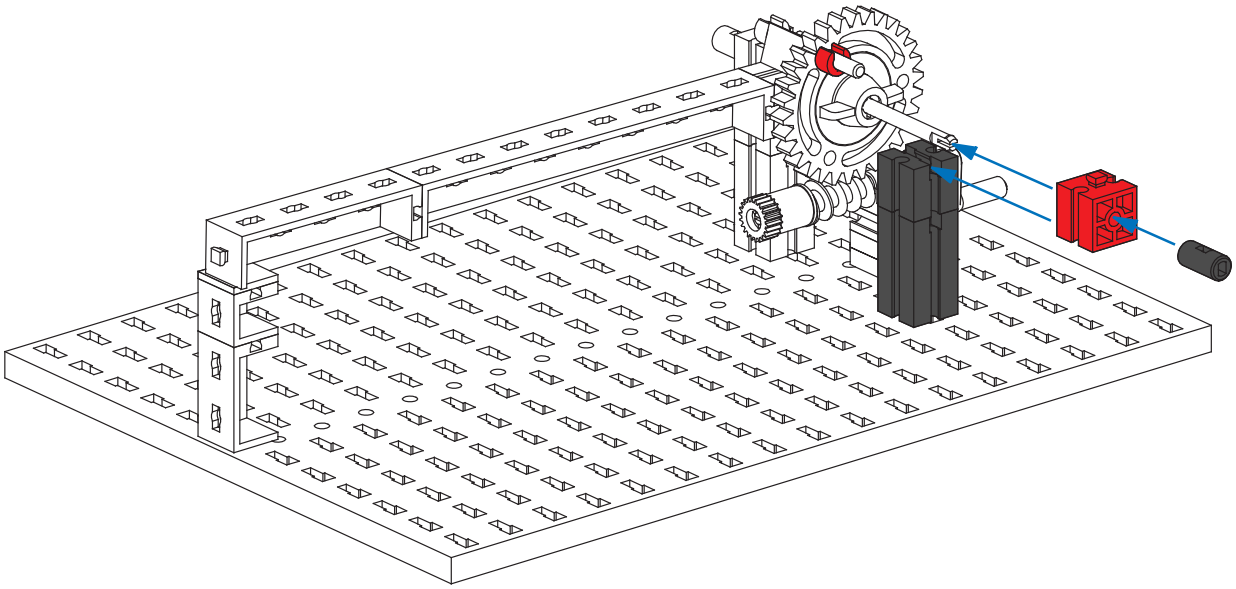

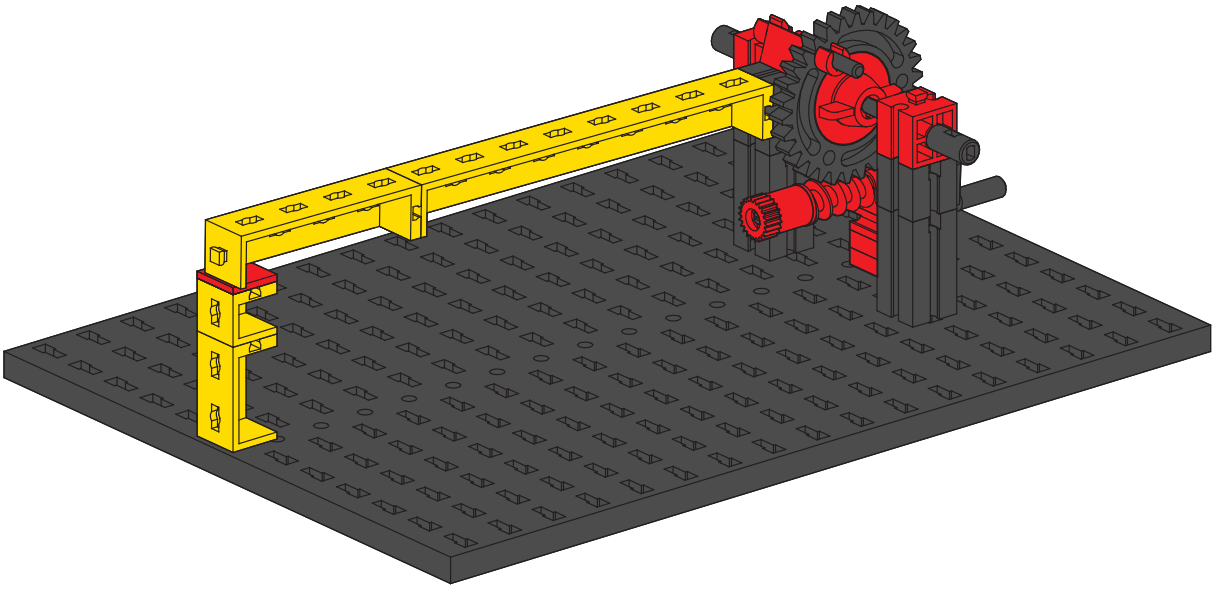

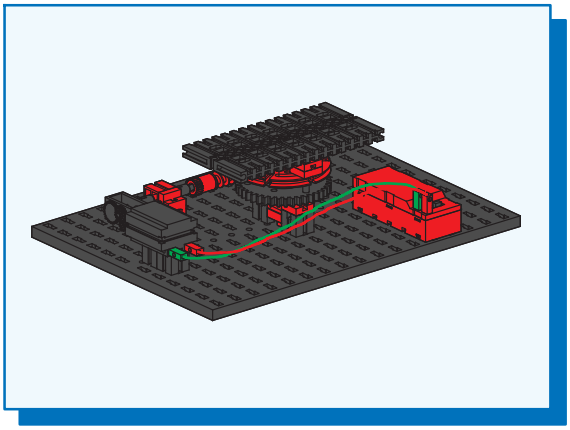

Drehtisch
Turntable
Plateau rotatif
Draaitafel
Mesa giratoria
Mesa rotatória
Tavola rotante
Поворотный стол
转台

1

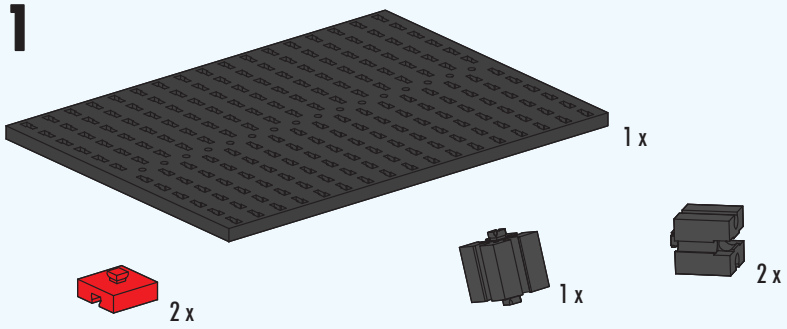

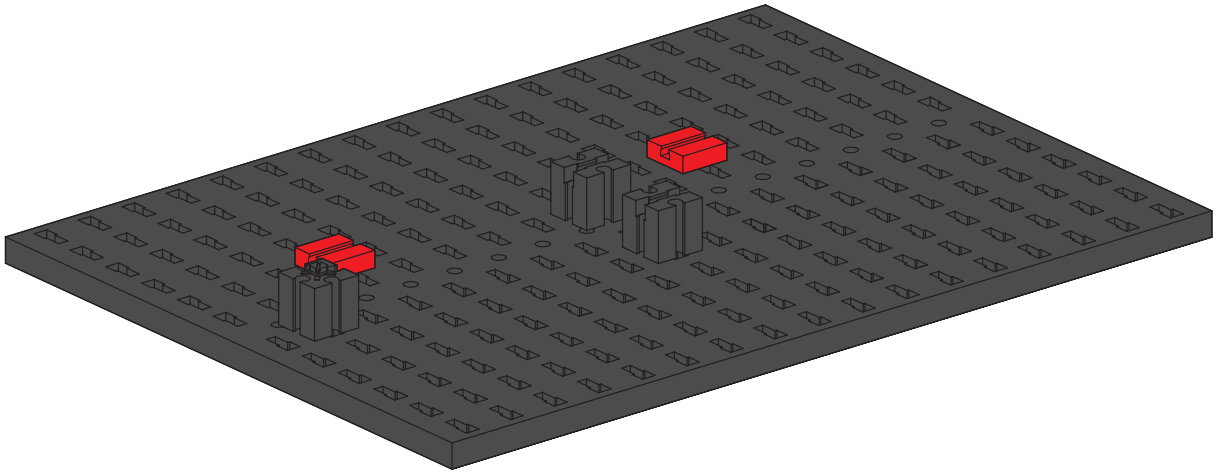

2

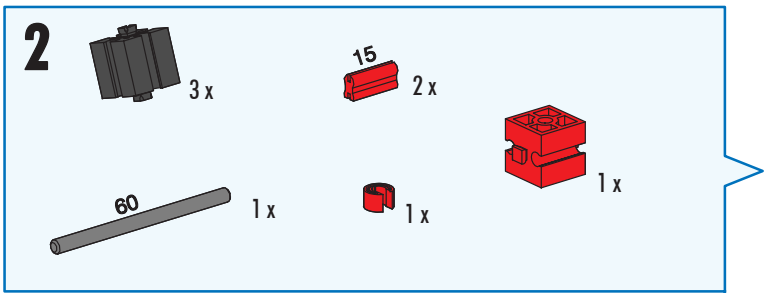

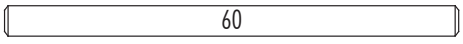

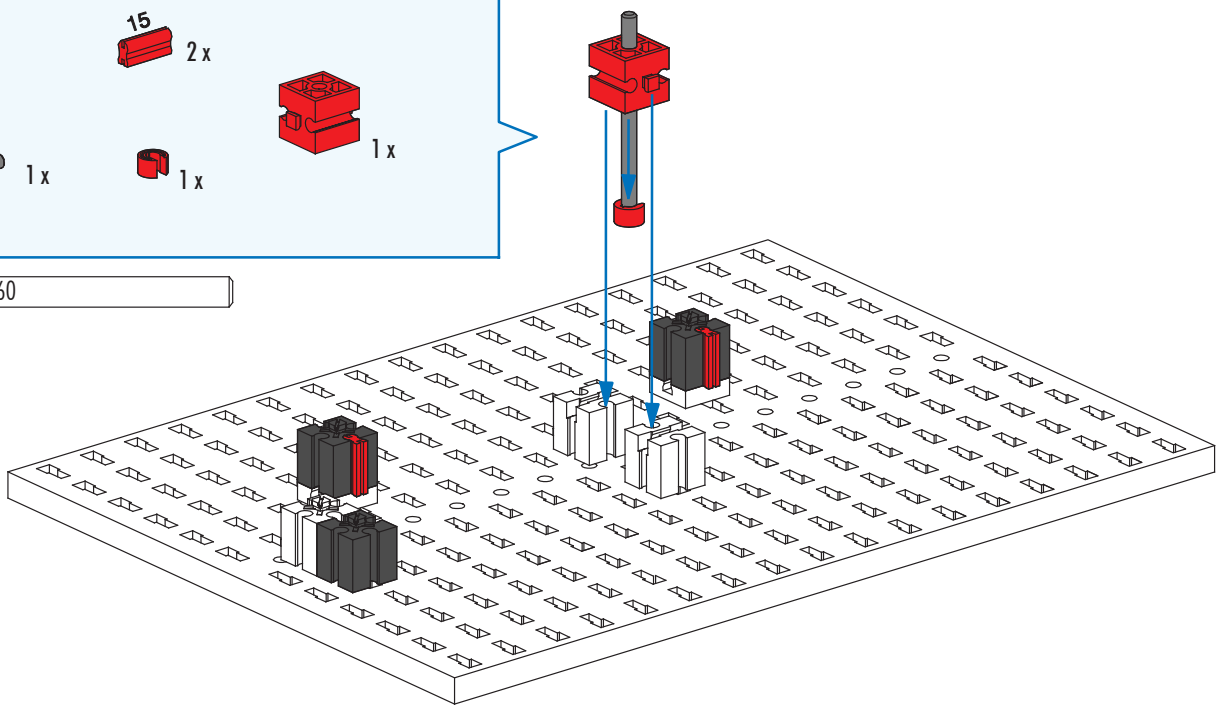

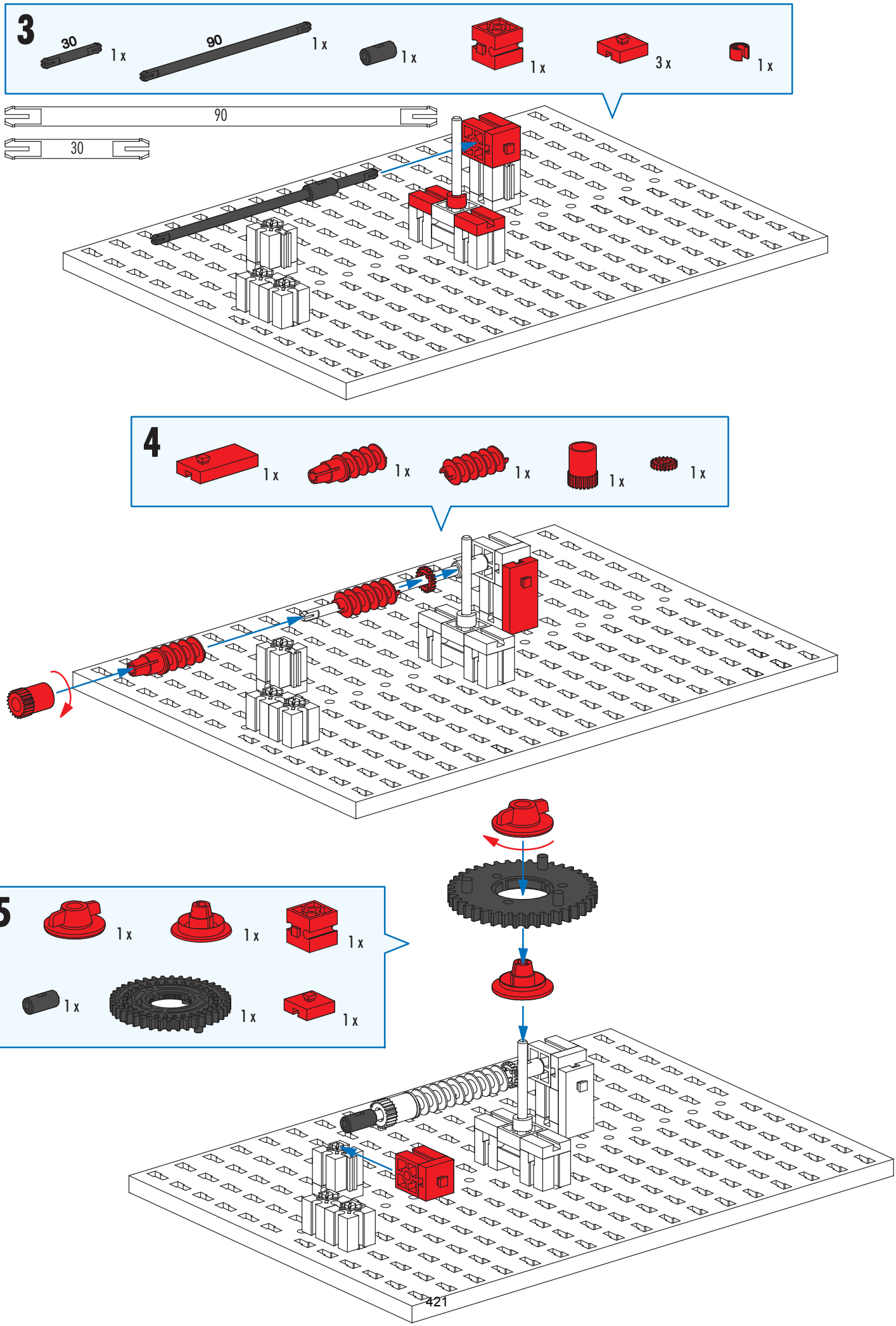
3
30
1 x
90
1 x
1 x
1 x
3 x
1 x
90
30
4
1 x
1 x
1 x
1 x
1 x
5
1 x
1 x
1 x
1 x
1 x
1 x
1 x

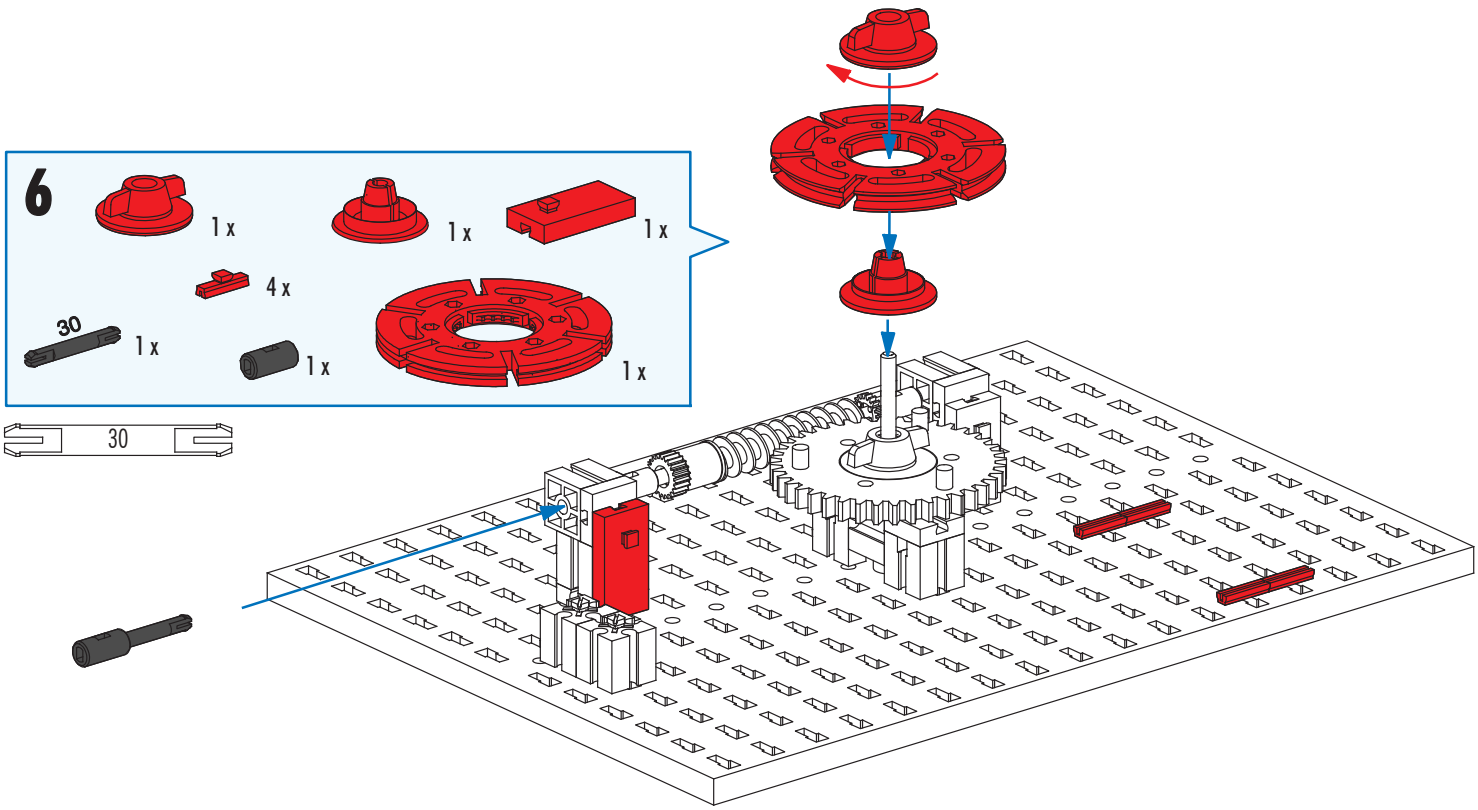
6
1 x
1 x
1 x
4 x
30
1 x
1 x
1 x
30

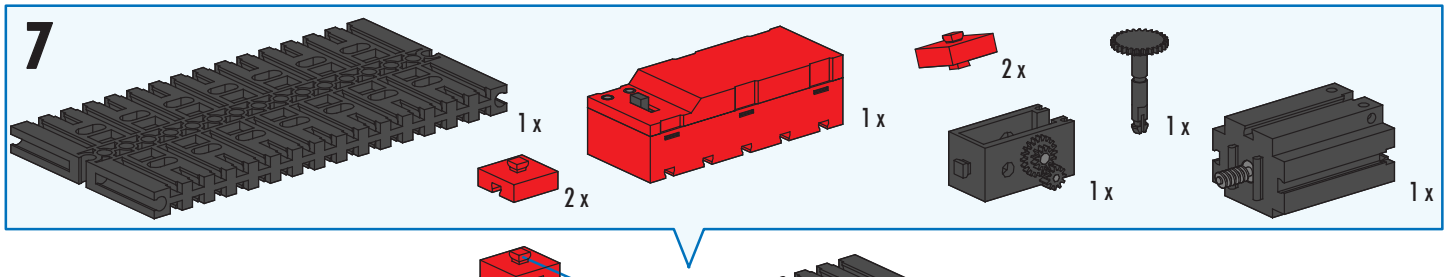
7
1 x
1 x
2 x
2 x
1 x
1 x
1 x

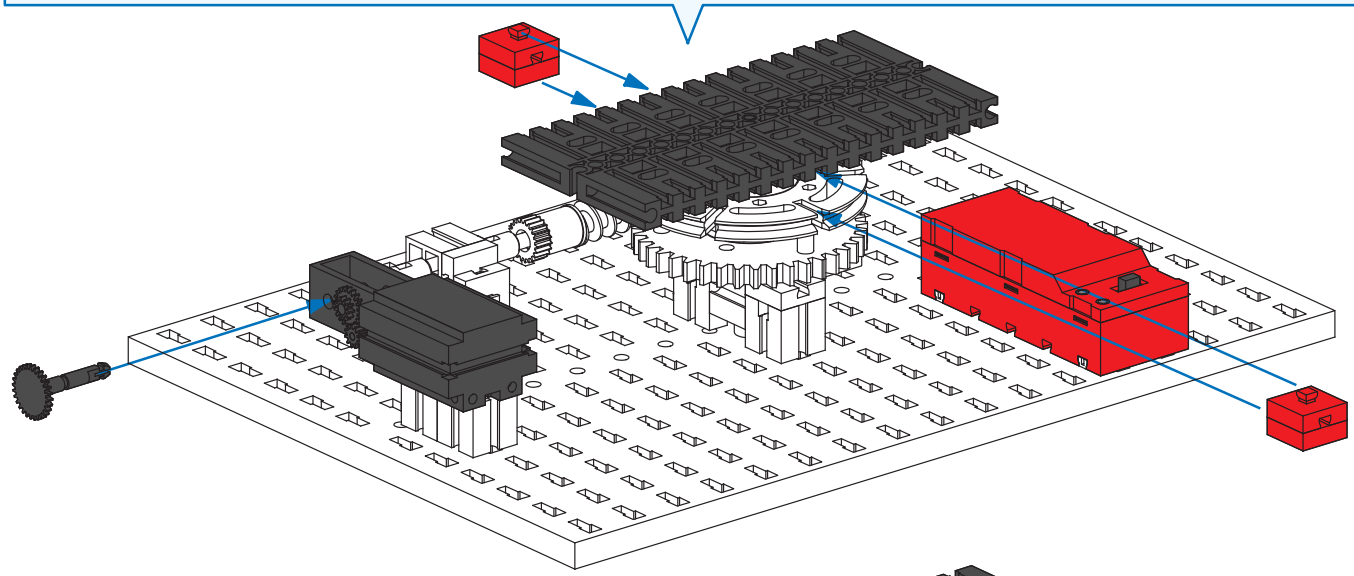

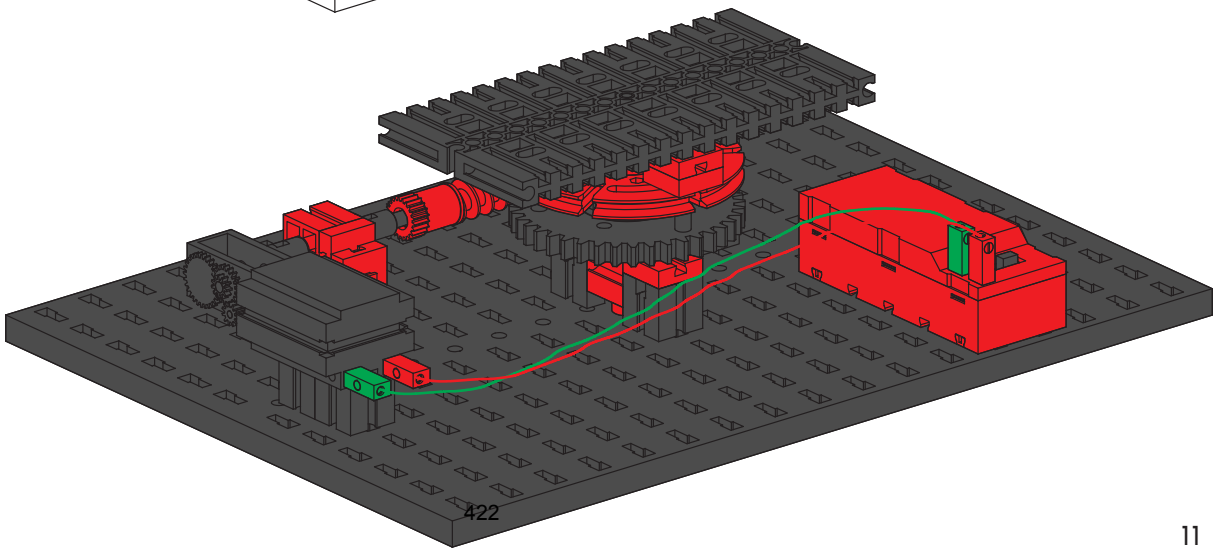

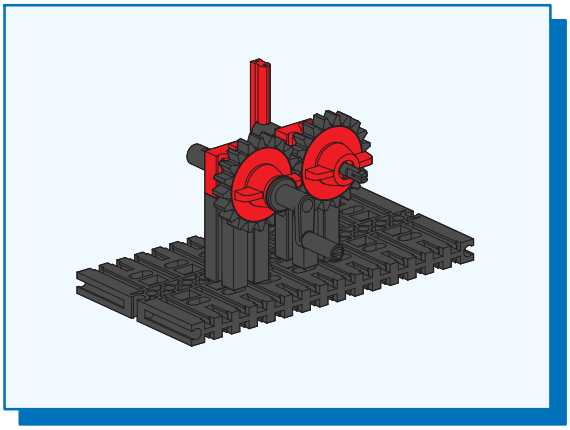

Kurbelgetriebe 1
Crank gear 1
Mécanisme à manivelle 1
Krukasoverbrenging 1
Mecanismo de manivela 1
Engrenagem de manivela 1
Ingranaggio a manovella 1
Кривошипный механизм 1
曲柄传动机构 1

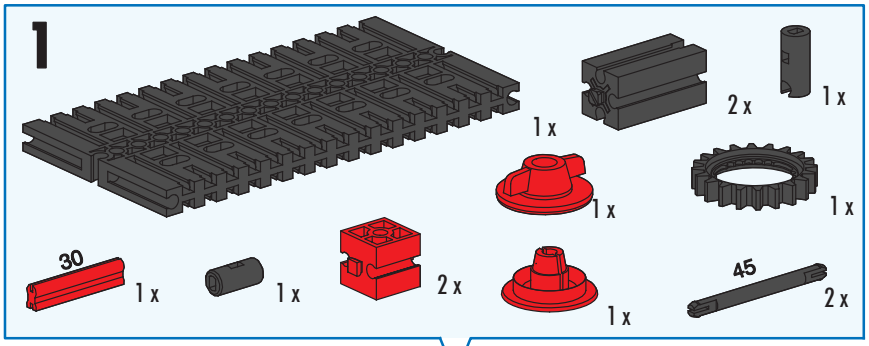

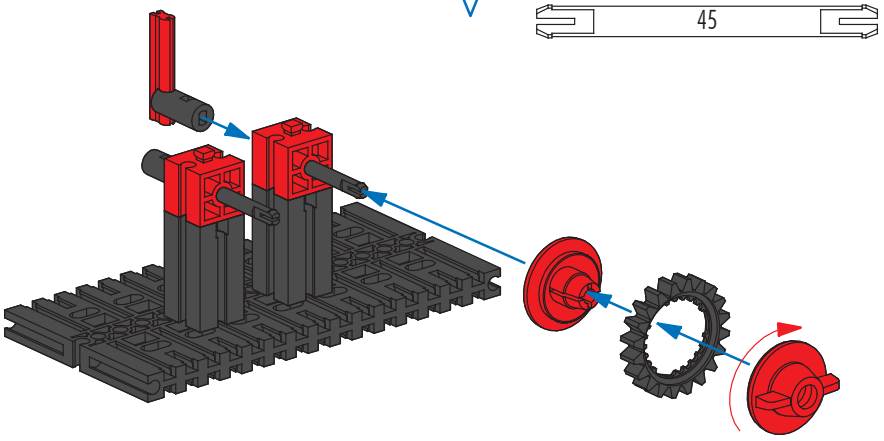

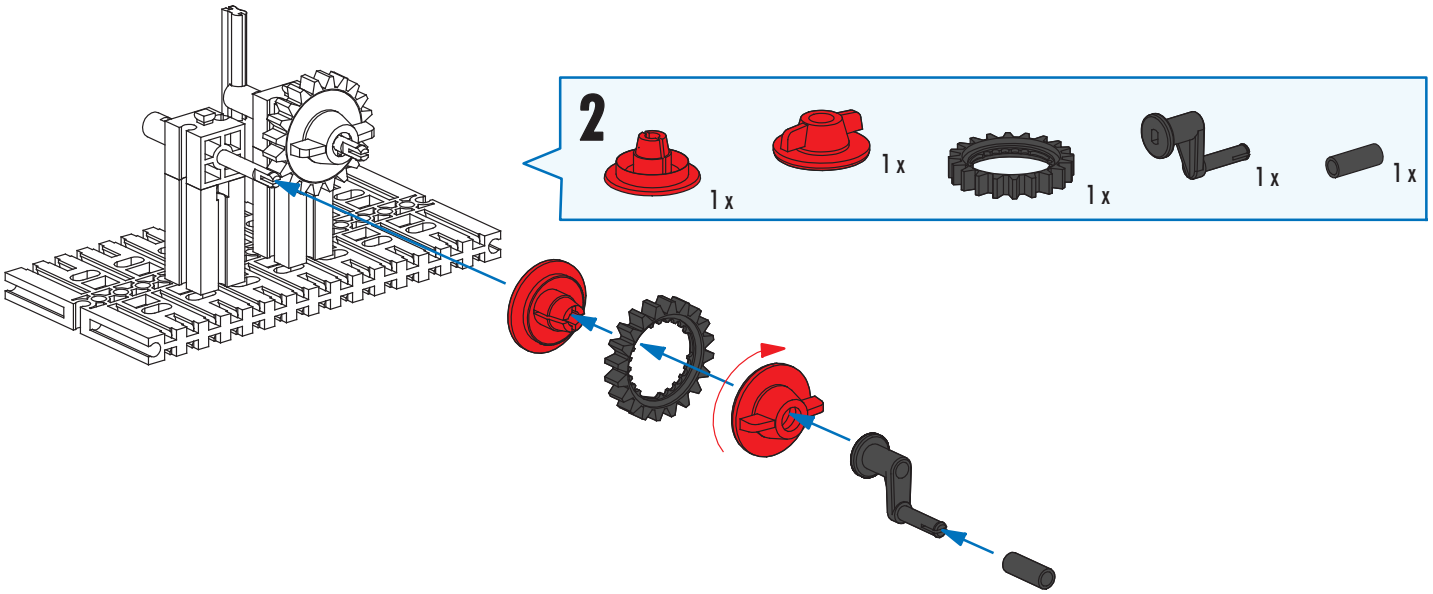

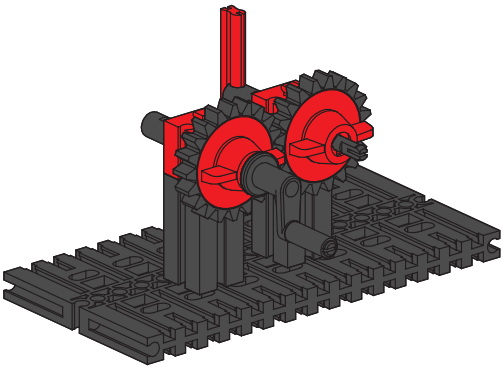

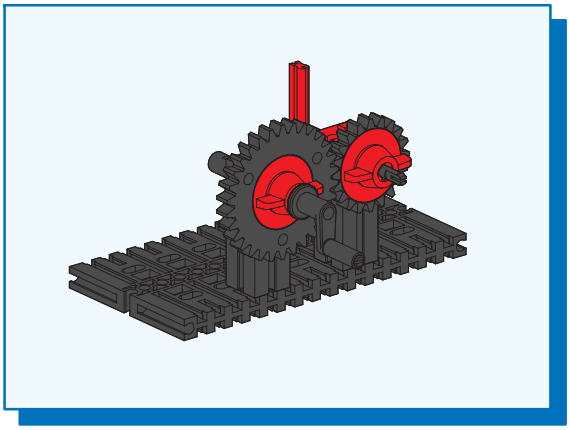

Kurbelgetriebe 2
Crank gear 2
Mécanisme à manivelle 2
Krukasoverbrenging 2
Mecanismo de manivela 2
Engrenagem de manivela 2
Ingranaggio a manovella 2
Кривошипный механизм 2
曲柄传动机构 2

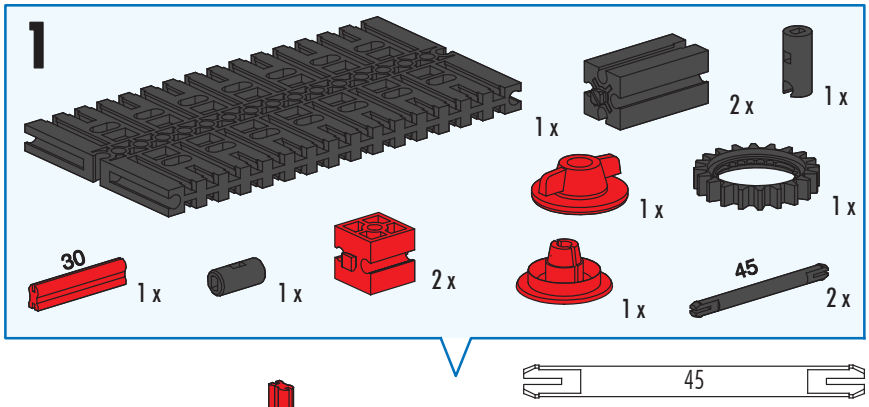

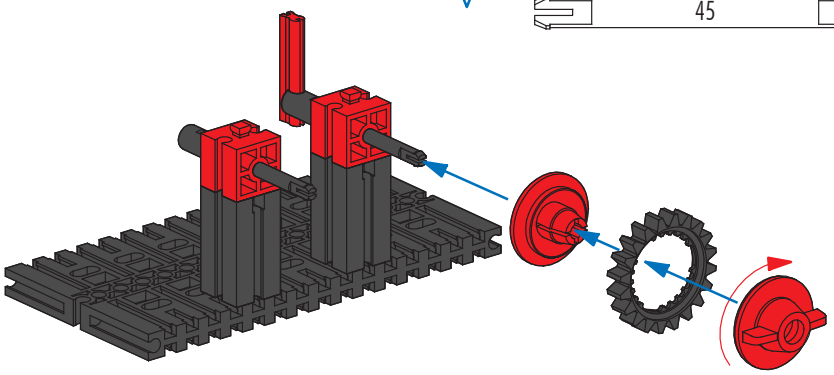

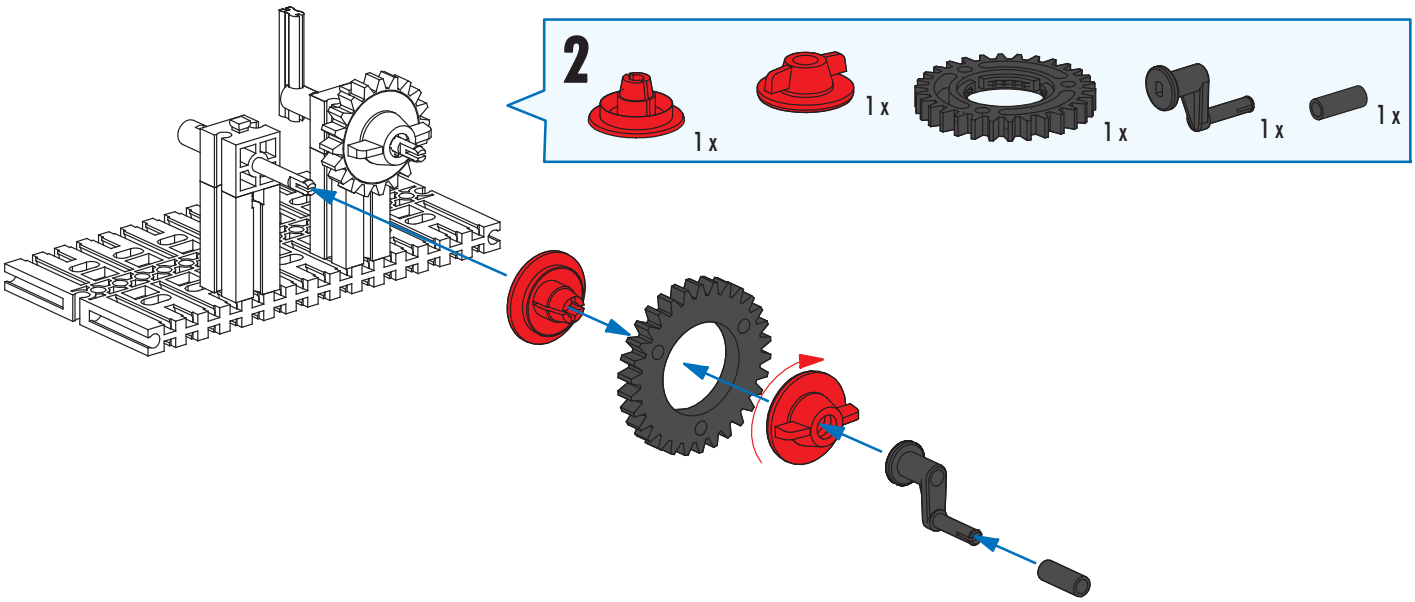

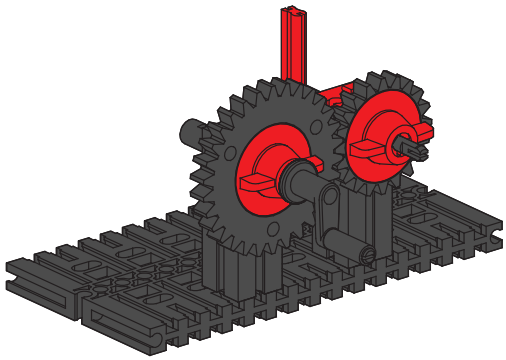

424

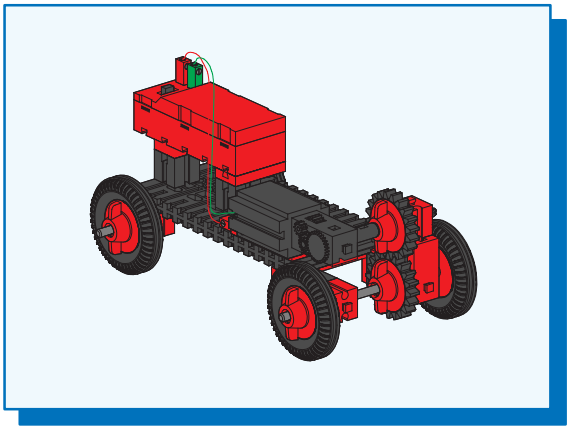

Fahrzeug 1
Vehicle 1
Véhicule 1

Voertuig 1
Vehículo 1
Veículo 1

Veicolo 1
Автомобиль 1
1号汽车

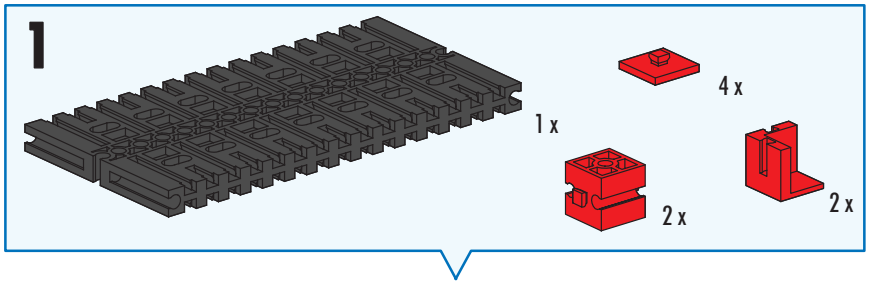

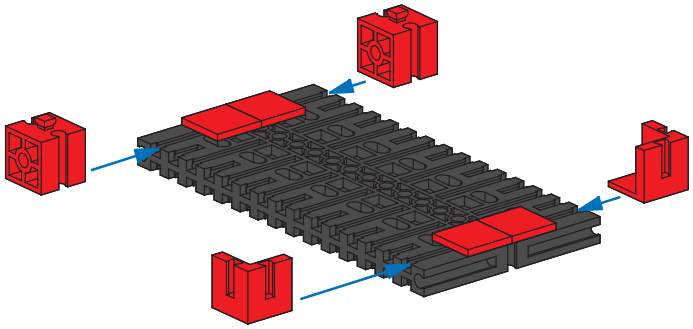

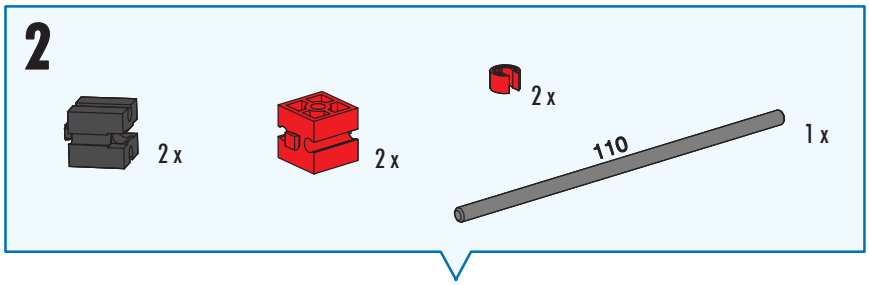

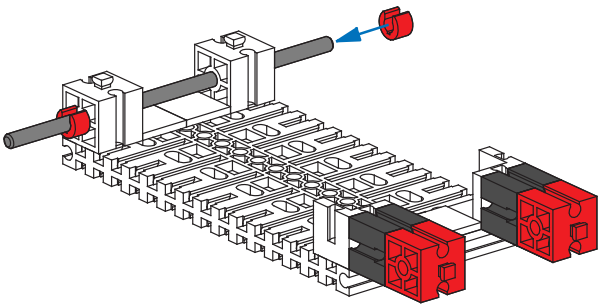

110

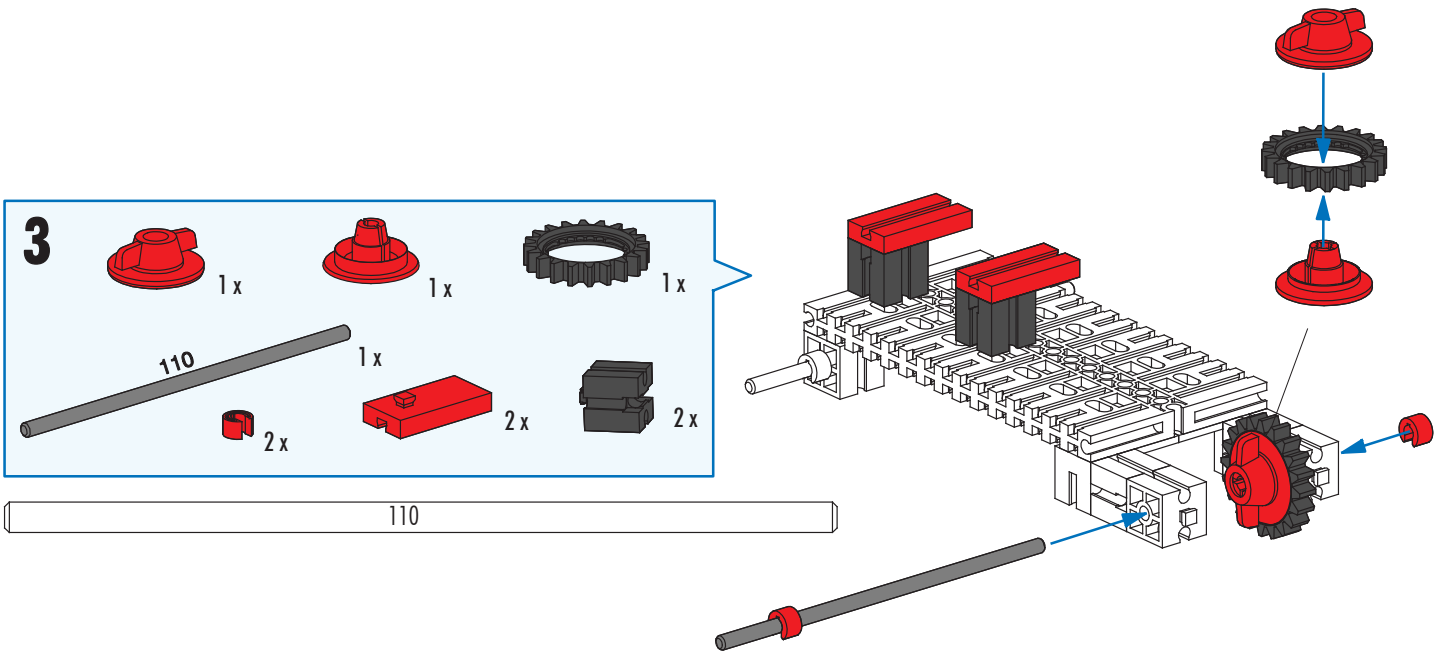
3
1 x
1 x
1 x
110
1 x
2 x
2 x
2 x
110

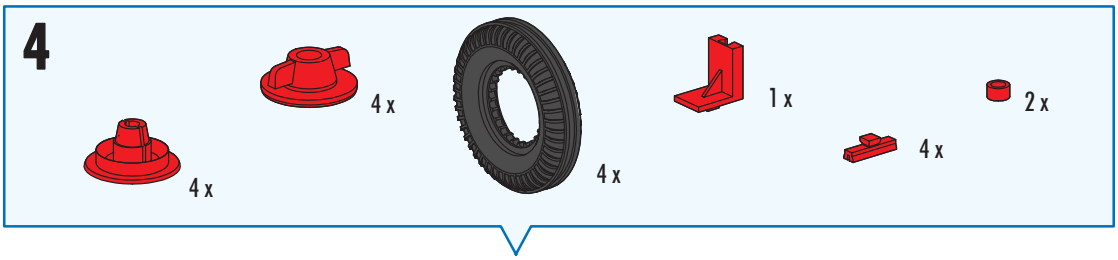
4
4 x
4 x
4 x
1 x
2 x
4 x

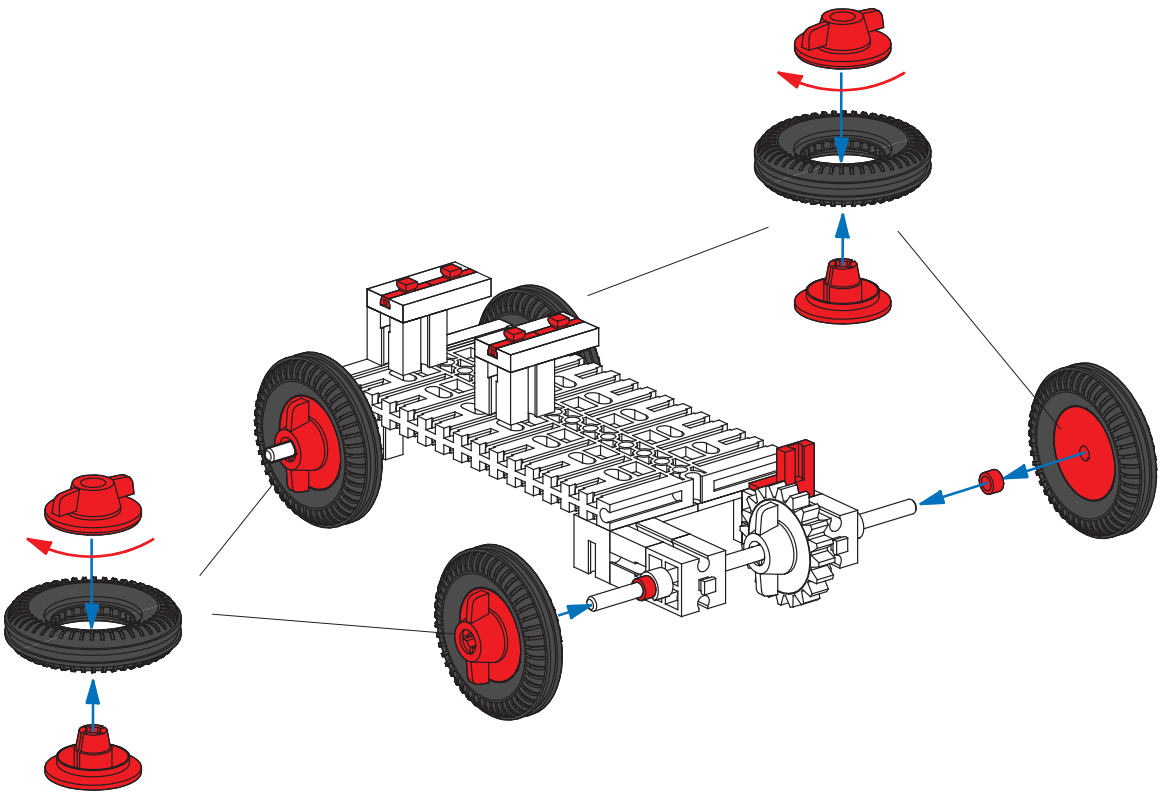

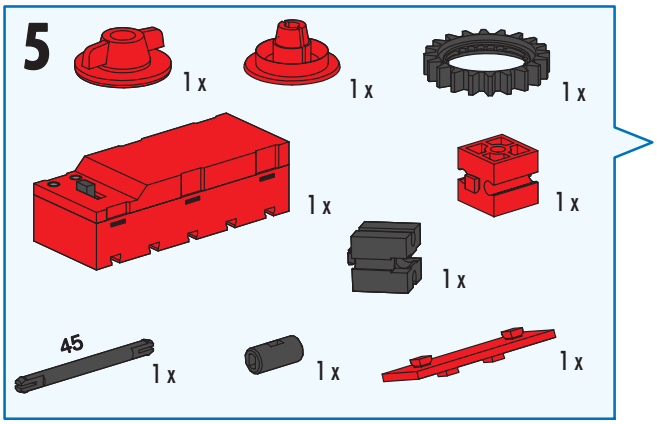
5
1 x
1 x
1 x
1 x
1 x
1 x
45
1 x
1 x
1 x
45

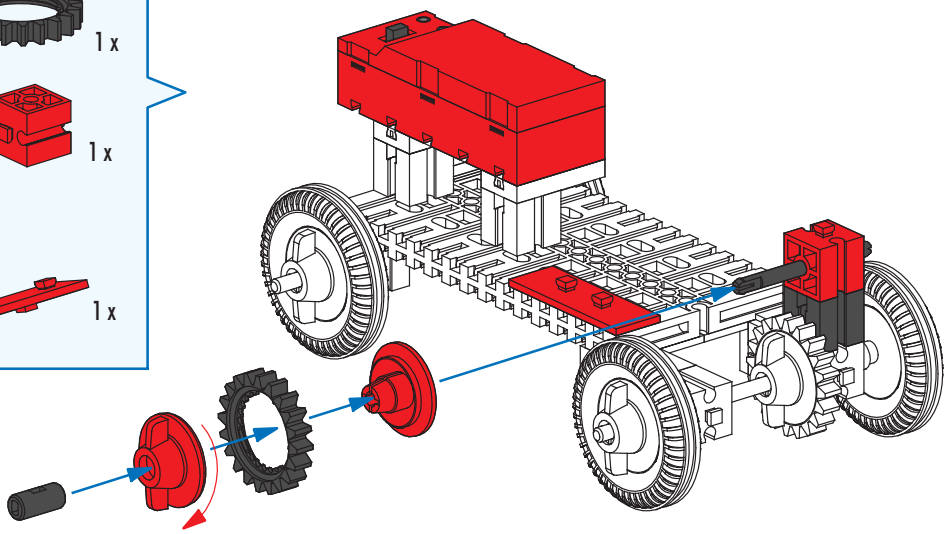

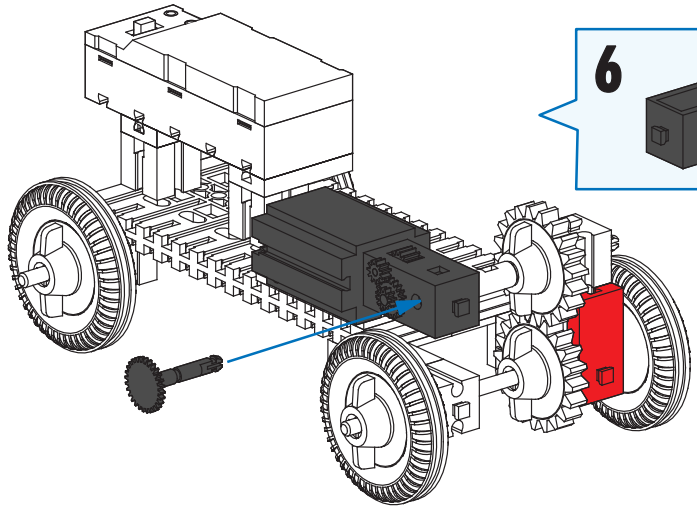

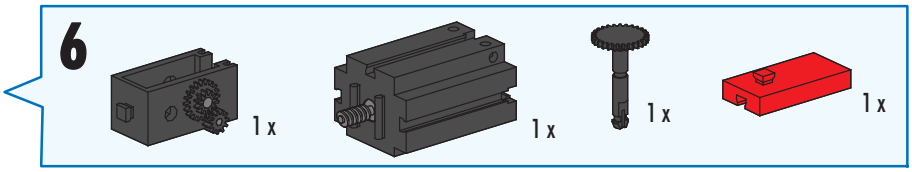
6
1 x
1 x
1 x
1 x

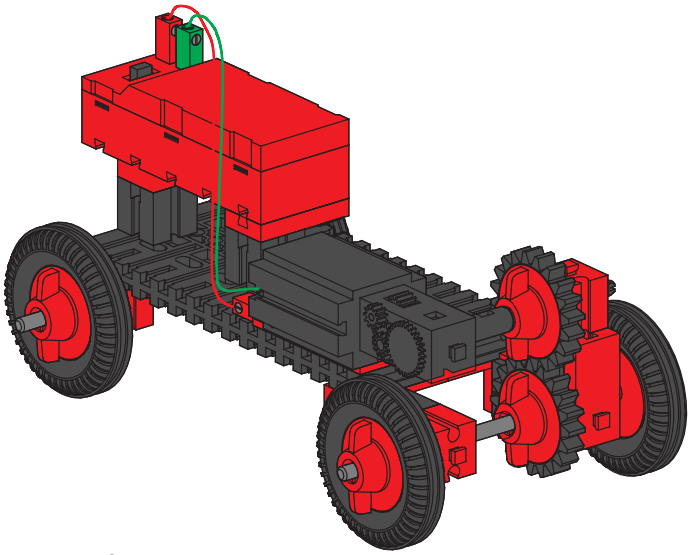

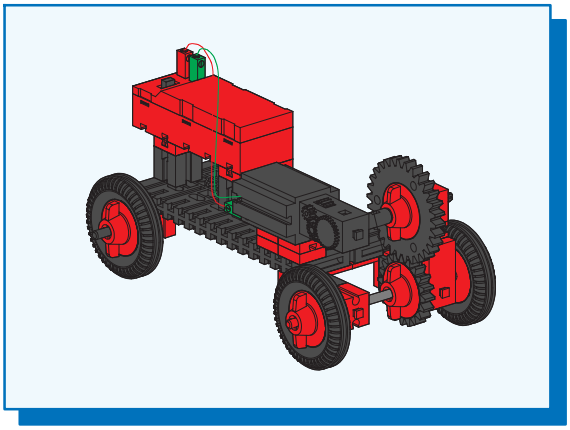

Fahrzeug 2
Vehicle 2
Véhicule 2
Voertuig 2
Vehículo 2
Veículo 2
Veicolo 2
Автомобиль 2
2号汽车

1-4

Seite 14
Page 14
Page 14
Bladzijde 14
Página 14
Pagina 14
Pagina 14
Страница 14
页次 14

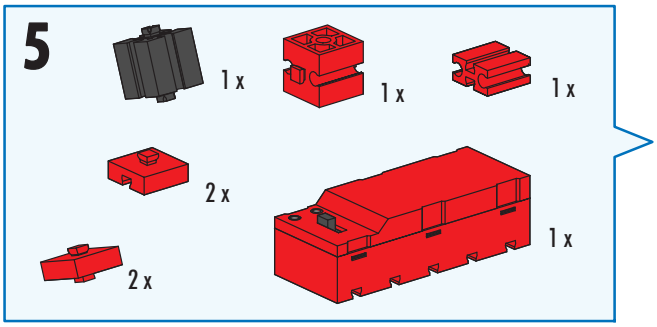

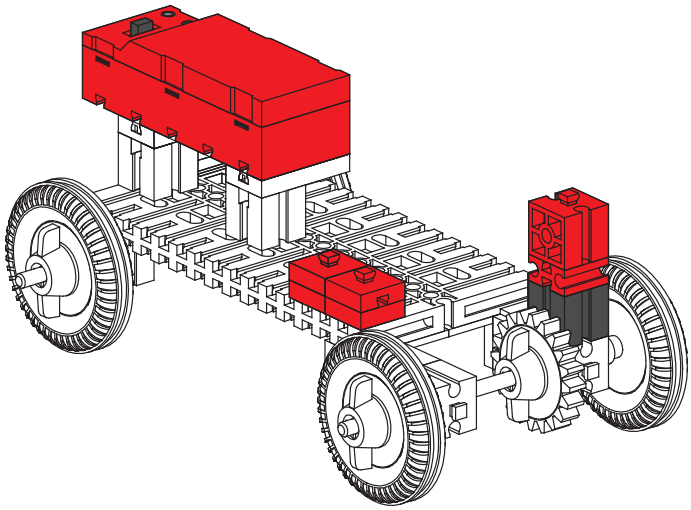

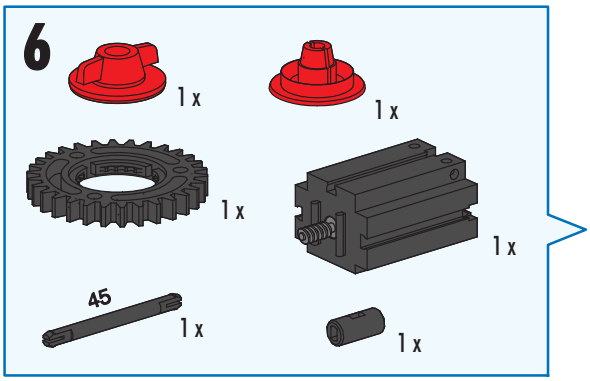

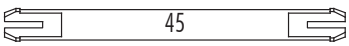

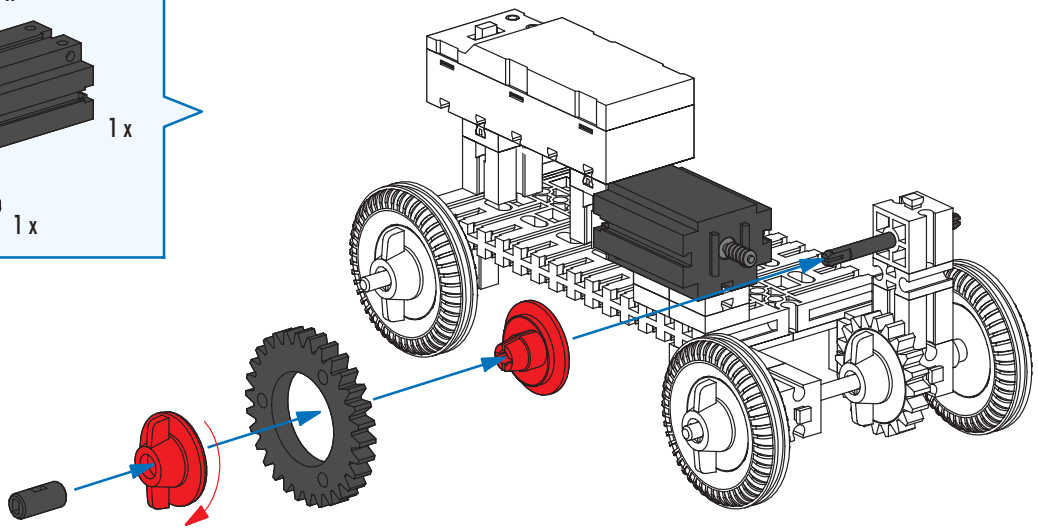

7

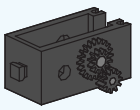

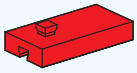

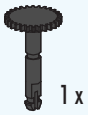

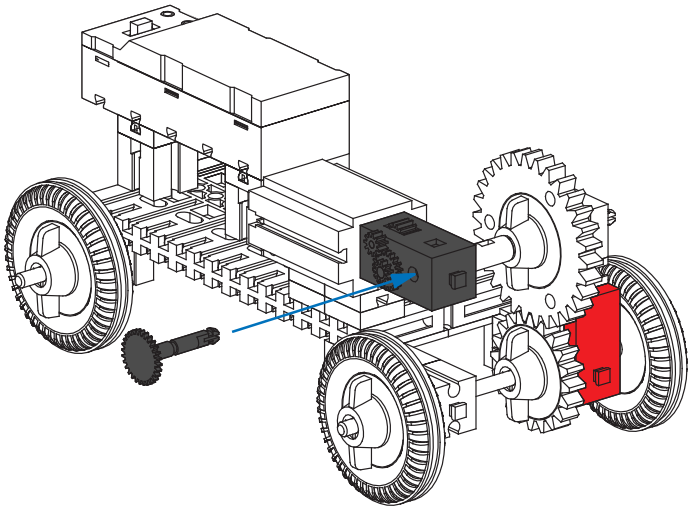

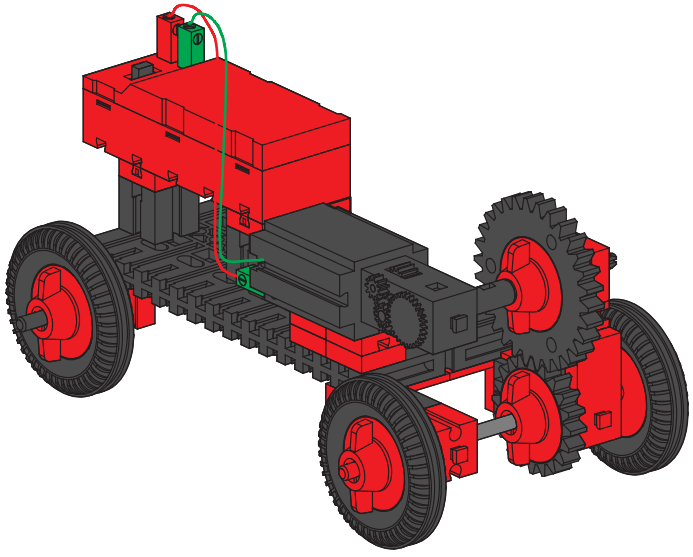

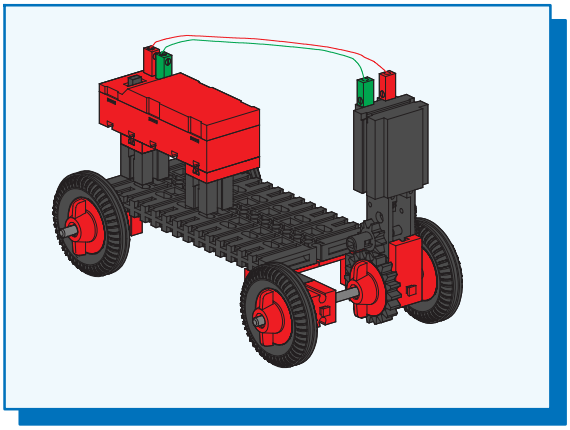

Fahrzeug 3
Vehicle 3
Véhicule 3
Voertuig 3
Vehículo 3
Veículo 3
Veicolo 3
Автомобиль 3
3号汽车

1-4

Seite	14
Page	14
Page	14
Bladzijde	14
Página	14
Pagina	14
Pagina	14
Страница	14
页次	14

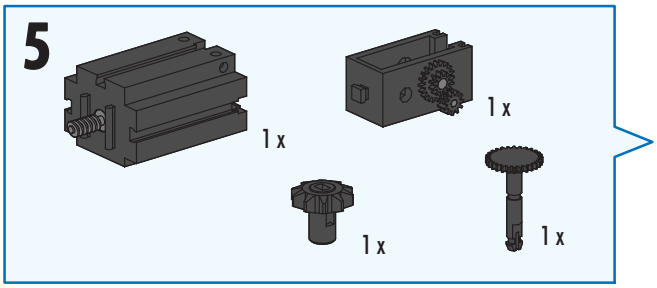

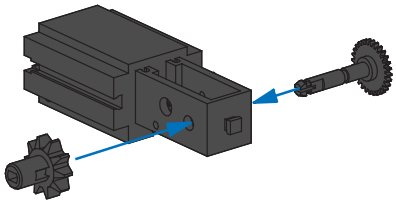

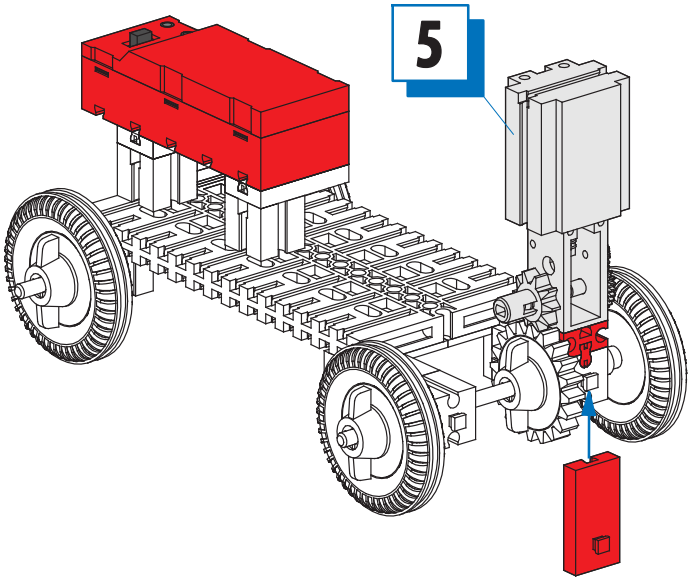

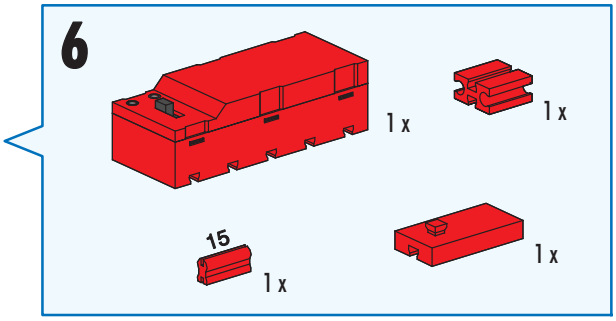

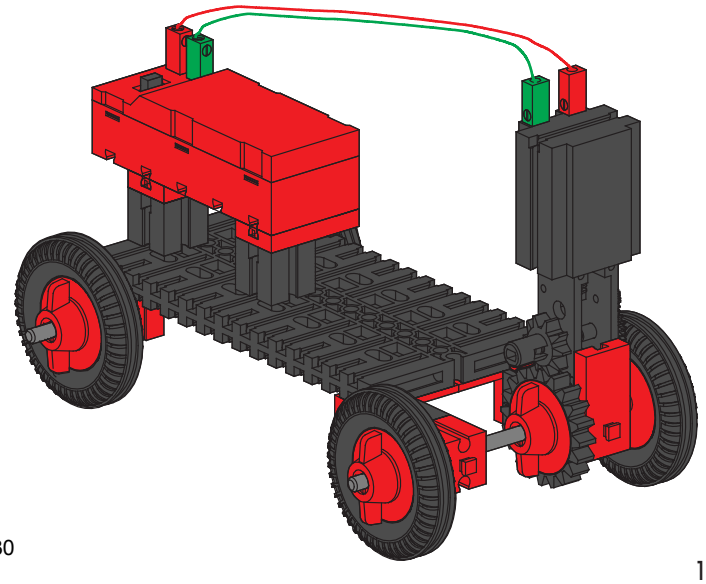

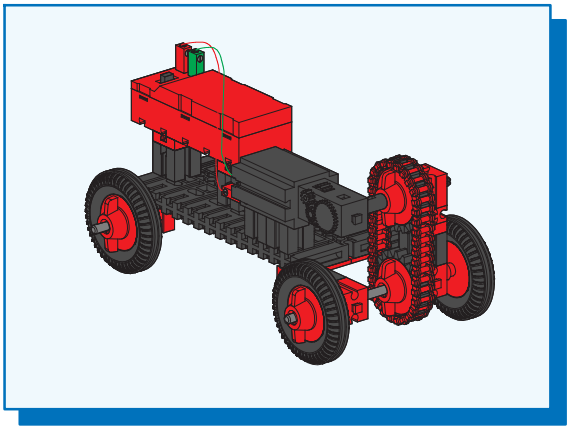

Zahnradgetriebe mit Ketten
Toothed gearing with chains
Transmission par engrenage avec chaîne

Tandwieloverbrenging met kettingen
Engranaje de ruedas dentadas con cadenas
Engrenagem de rodas dentadas com correntes

Trasmissione a ingranaggi con catene
Зубчатая передача с цепями
带有链条的齿轮传动机构

1-4

Seite	14
Page	14
Page	14
Bladzijde	14
Página	14
Pagina	14
Pagina	14
Страница	14
页次	14

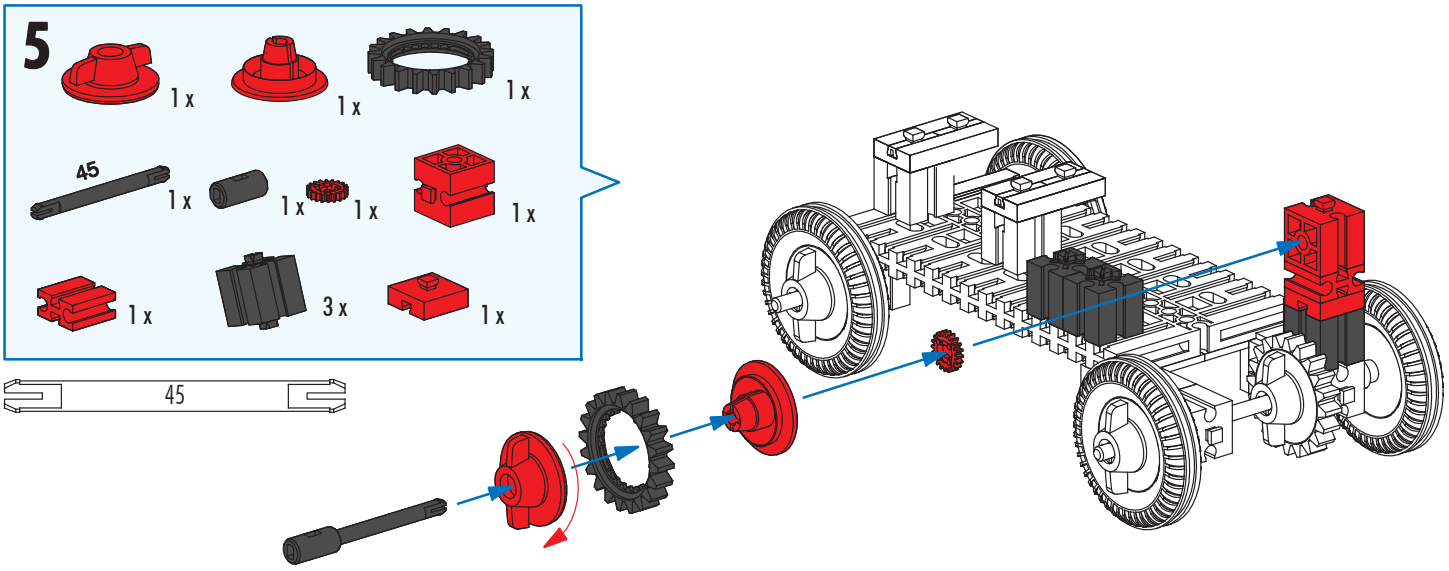

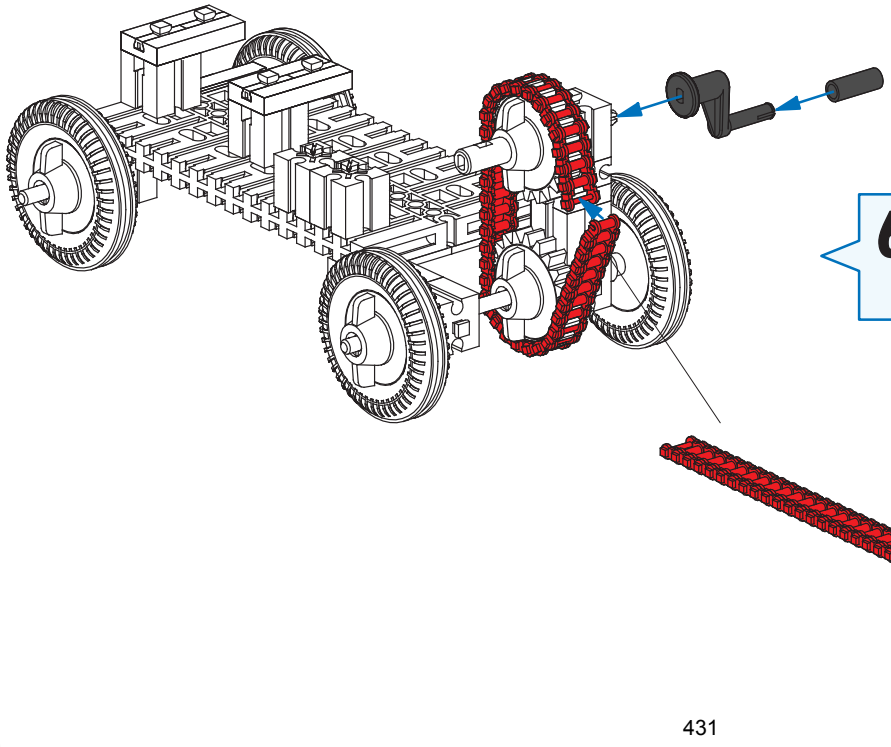

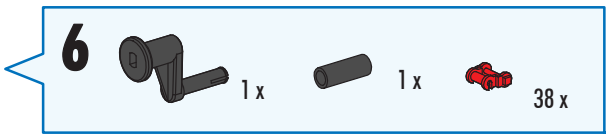

7

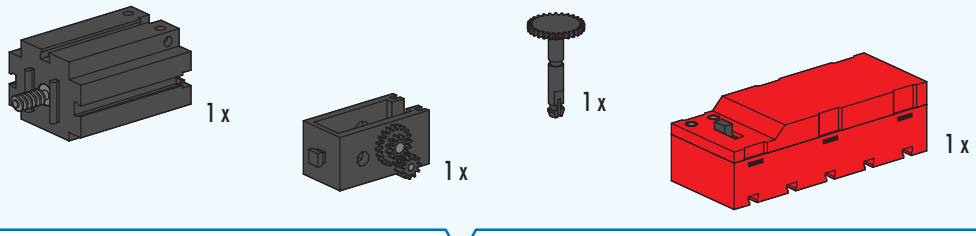

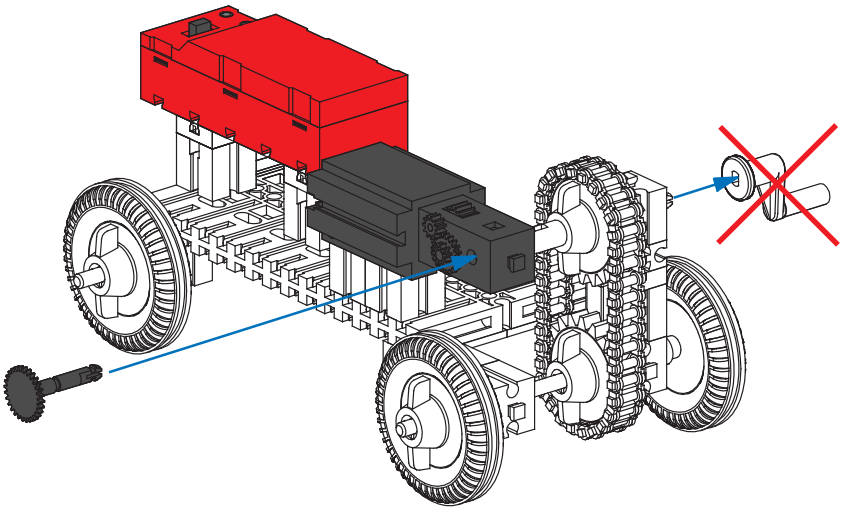

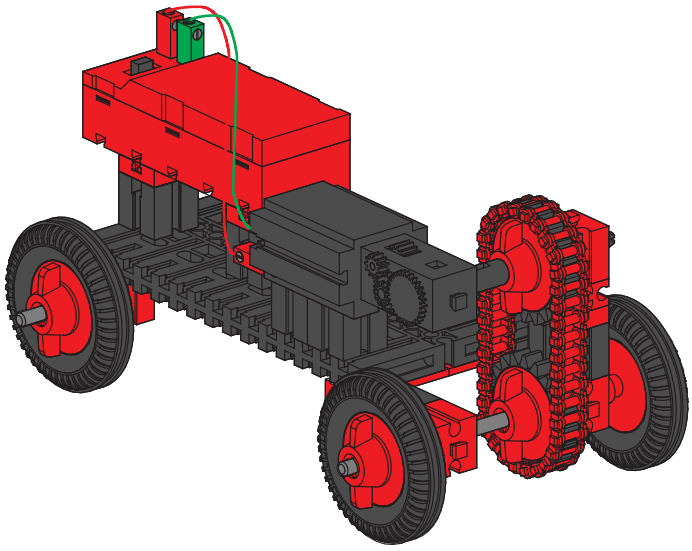

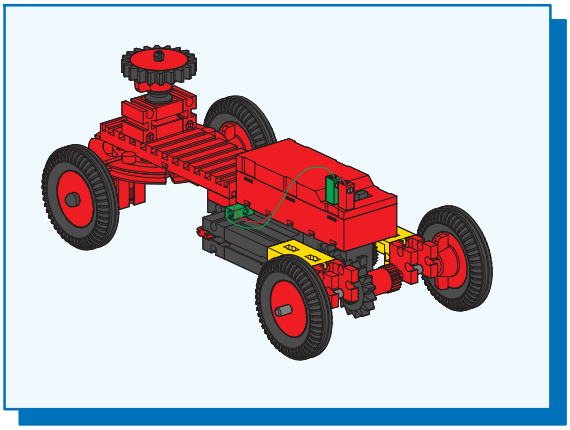

Fahrzeug mit Lenkung
Vehicle with steering
Véhicule avec direction
Voertuig met besturing
Vehículo con dirección
Veículo com direção
Veicolo con sterzo
Автомобиль с рулевым управлением
带有转向装置的汽车

1

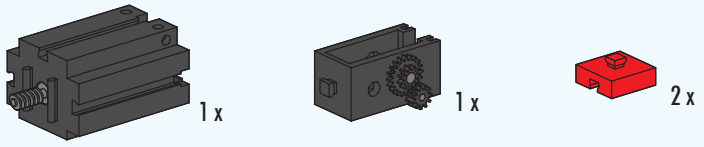

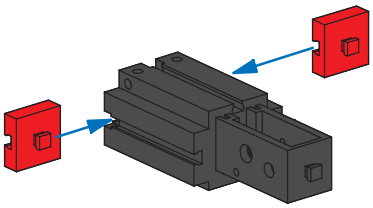

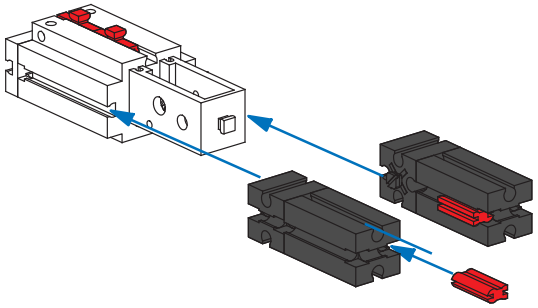

2

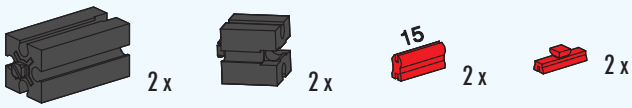

3

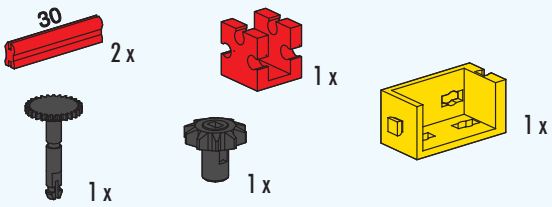

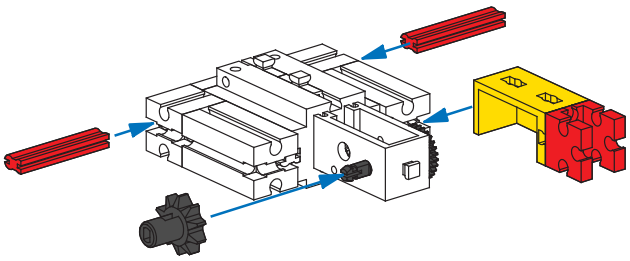

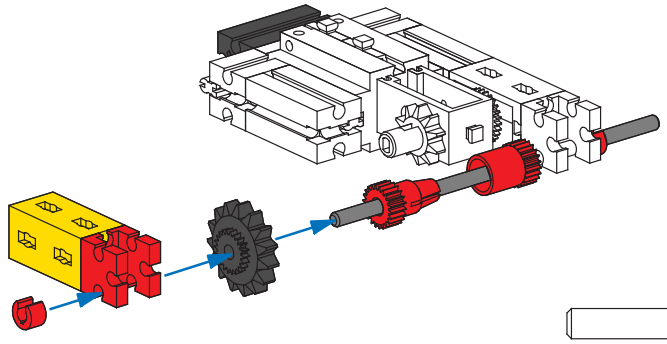

4

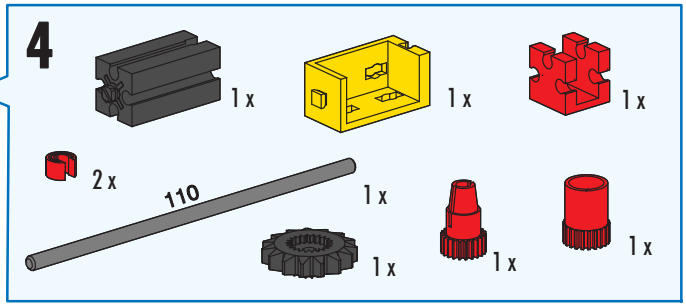

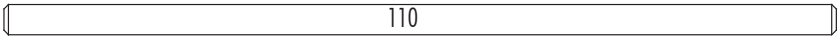

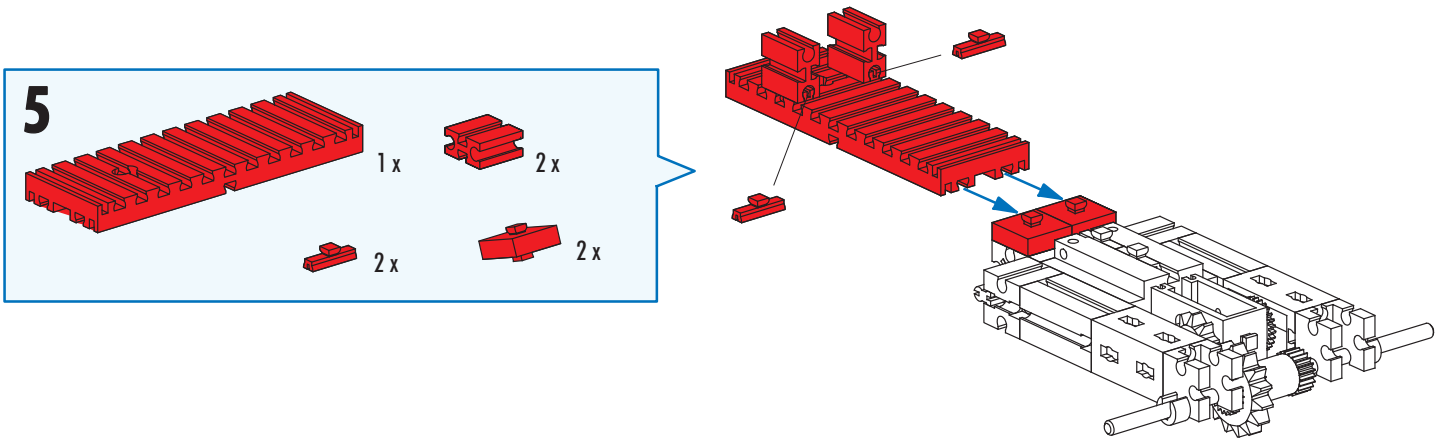
5
1 x
2 x
2 x
2 x

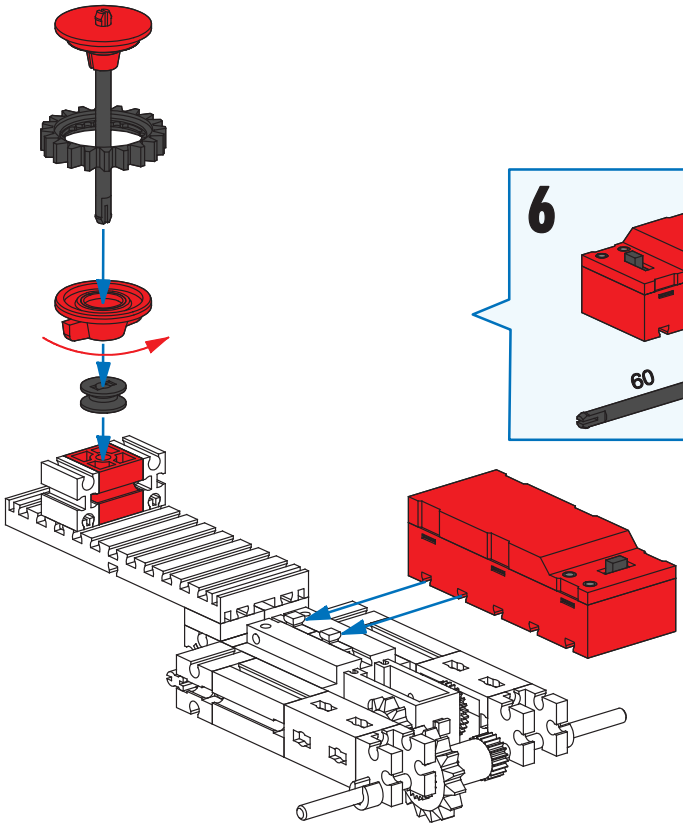

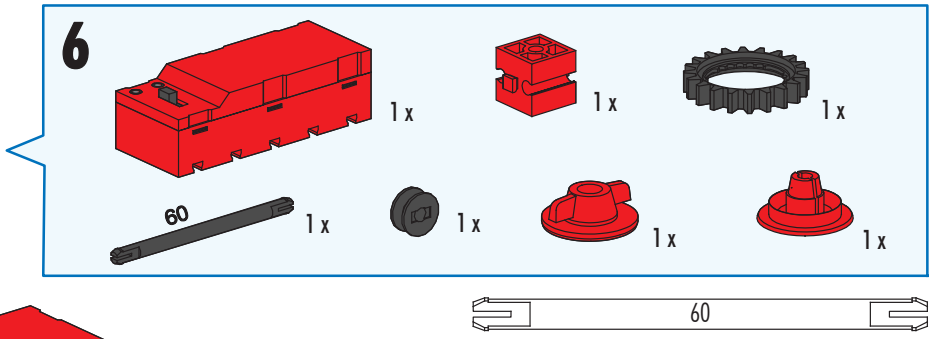
6
1 x
1 x
1 x
60
1 x
1 x
1 x
1 x

60

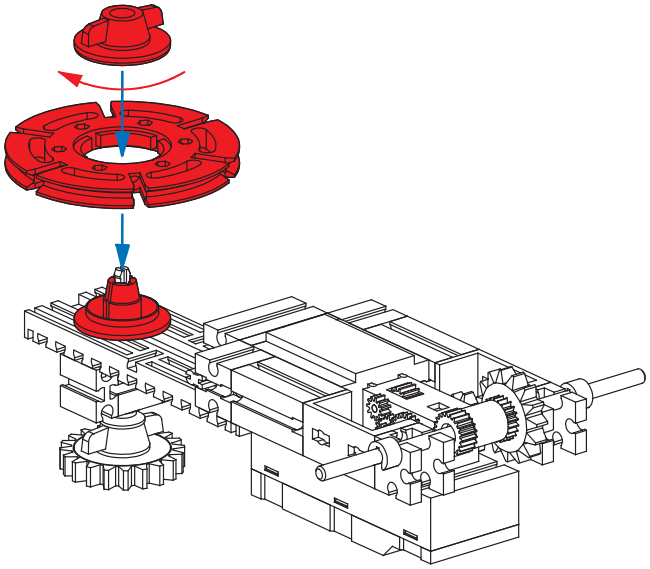

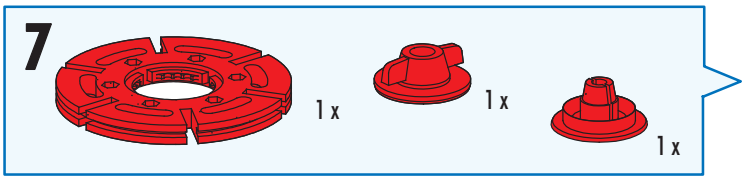
7
1 x
1 x
1 x

8

2 x

1 x

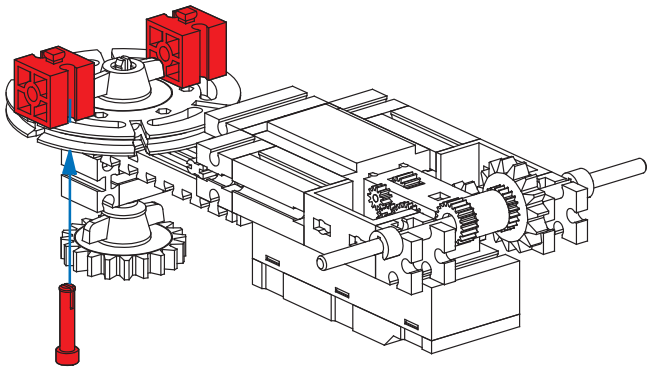

9

1 x

4 x

4 x

3 x

1 x

3 x

2 x

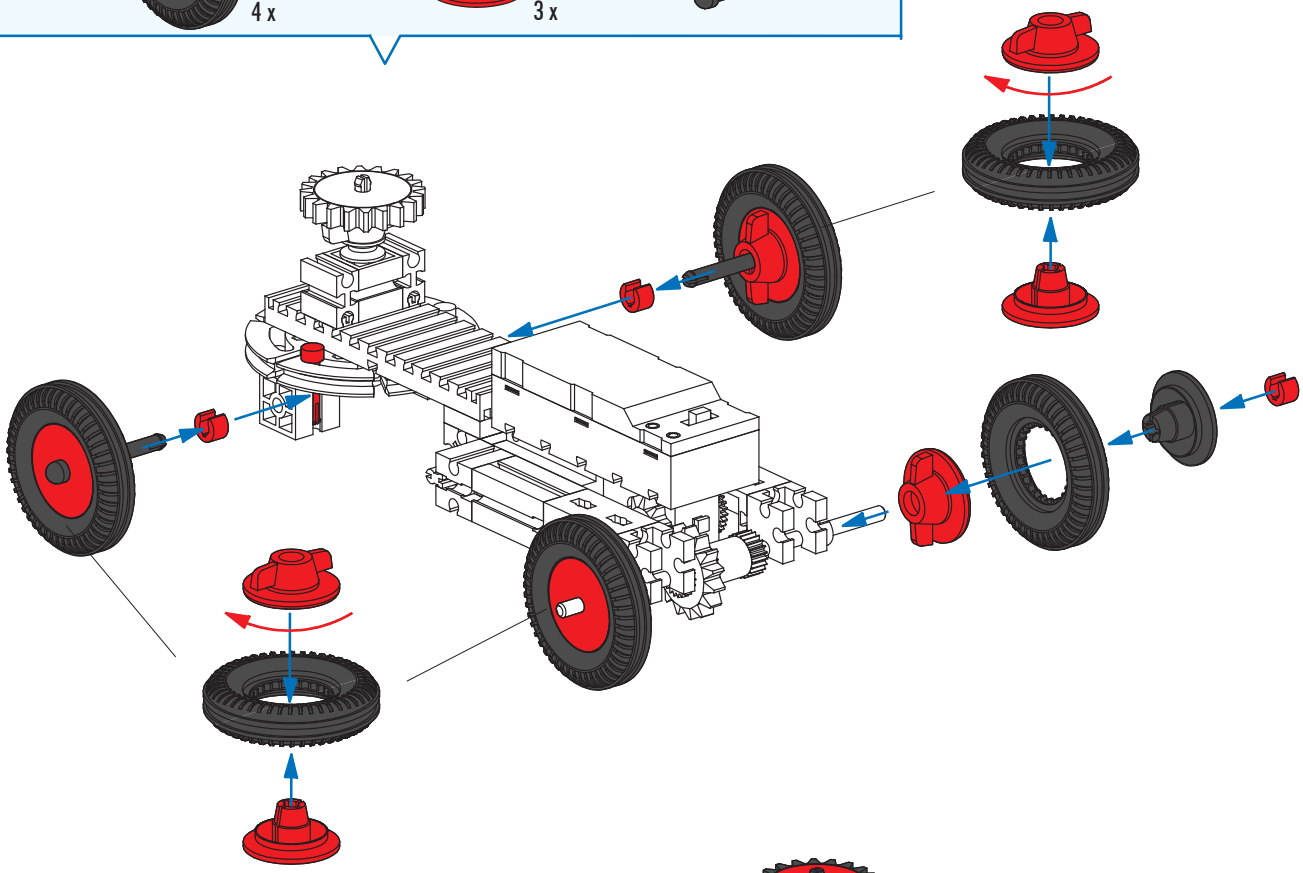

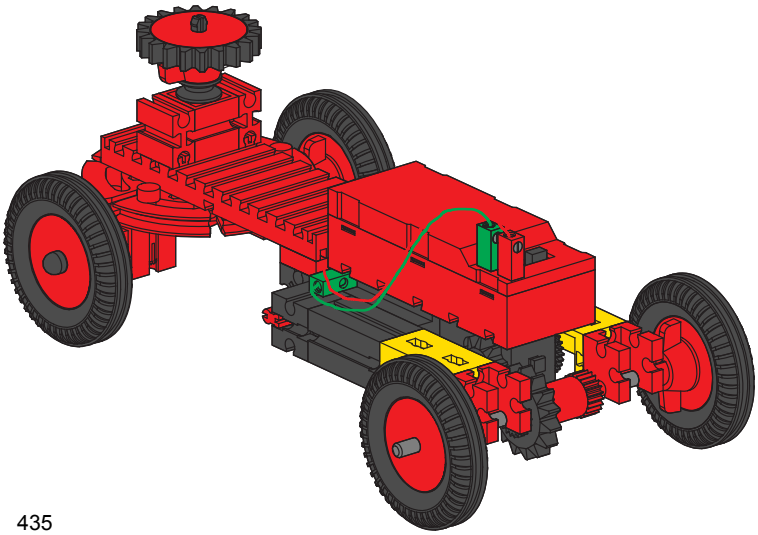

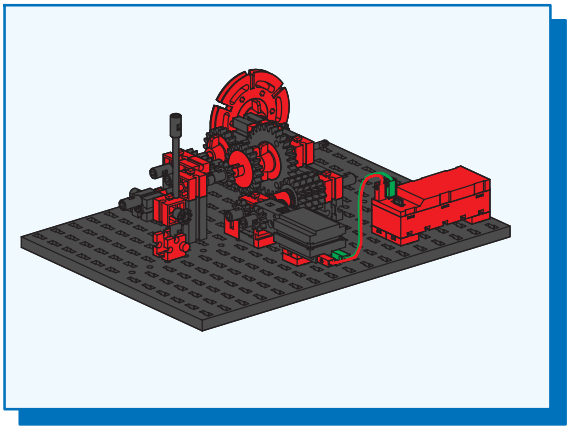

Schaltgetriebe
Gearbox
Mécanisme intermittent
Schakeloverbrenging
Cambio de velocidades
Caixa de câmbio
Cambio meccanico
Коробка передач
变速器

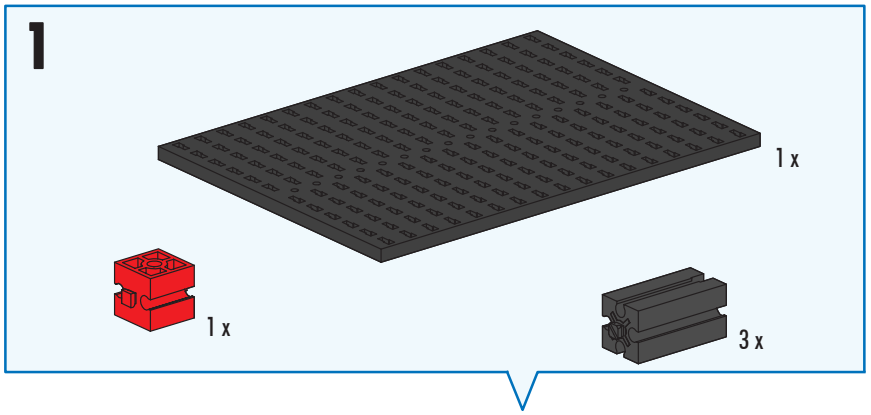

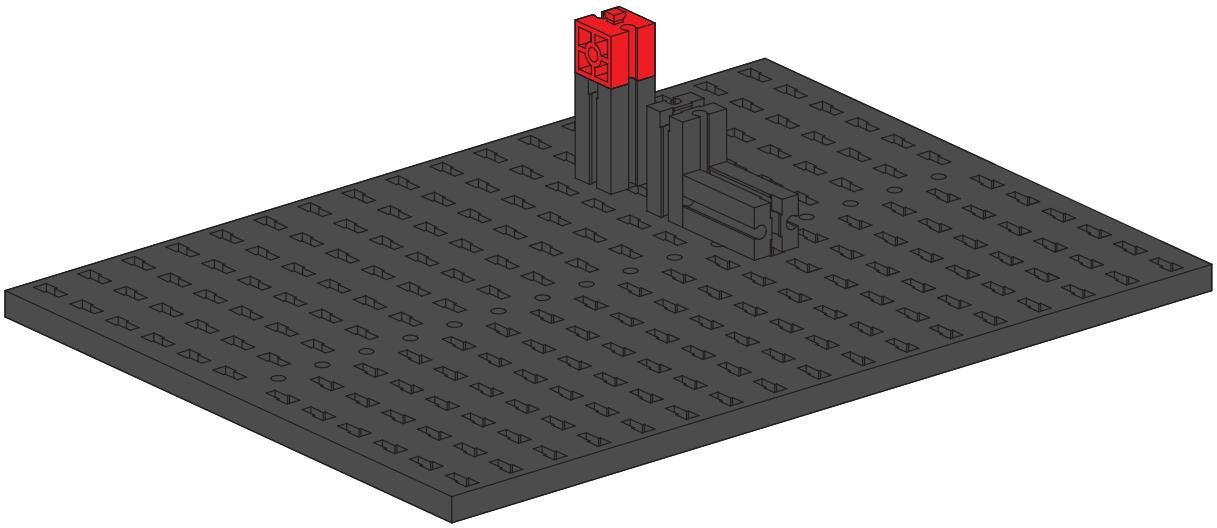

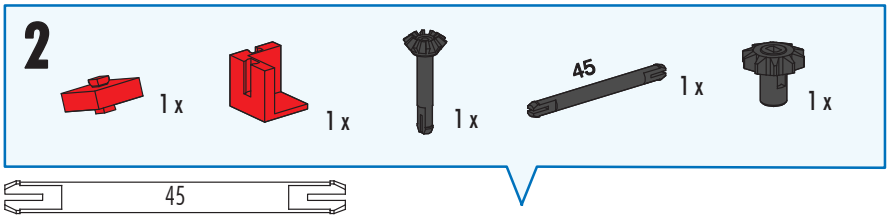

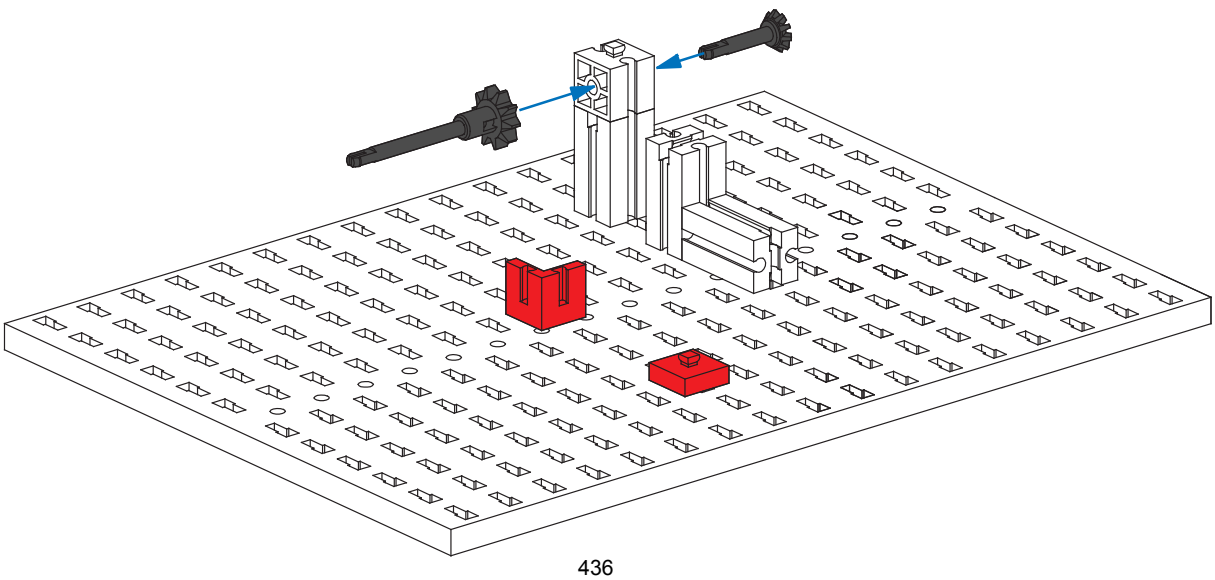

3

1 x 1 x 1 x 1 x 1 x 2 x

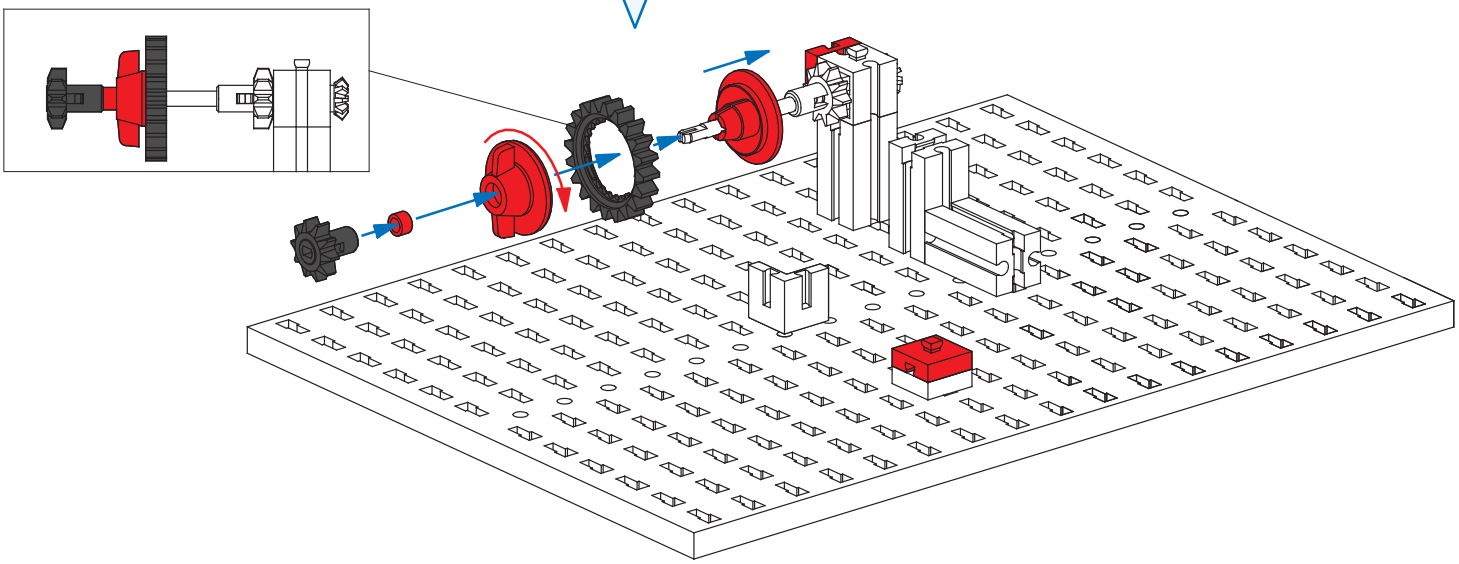

4

1 x 1 x 2 x 30 1 x 30 2 x 2 x 1 x

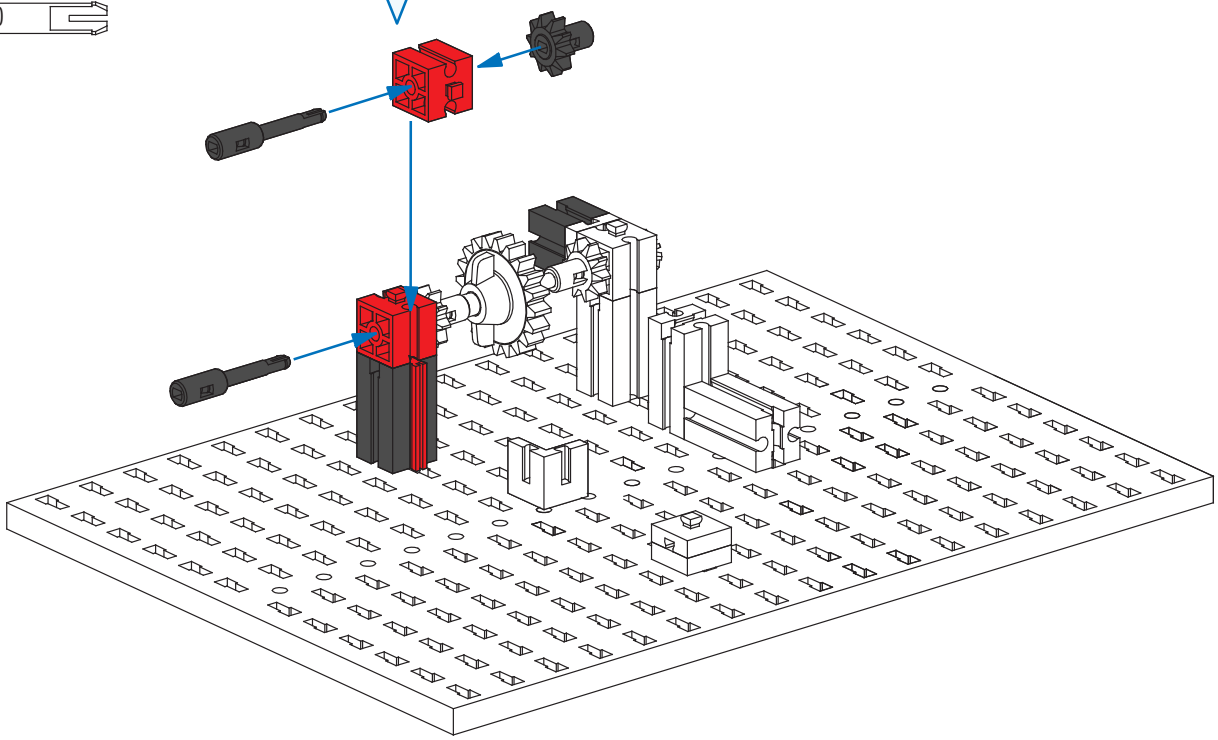

5

1 x 2 x 2 x 1 x 90 1 x 2 x 1 x

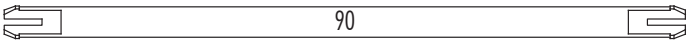

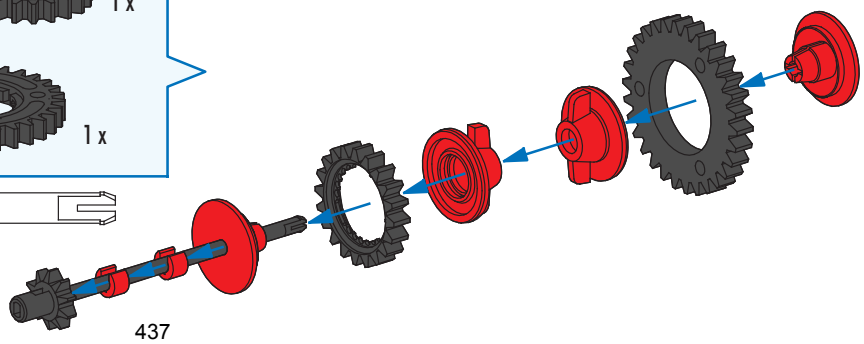

437

6

1 x

1 x

1 x

1 x

1 x

1 x

1 x

45

1 x

45

5

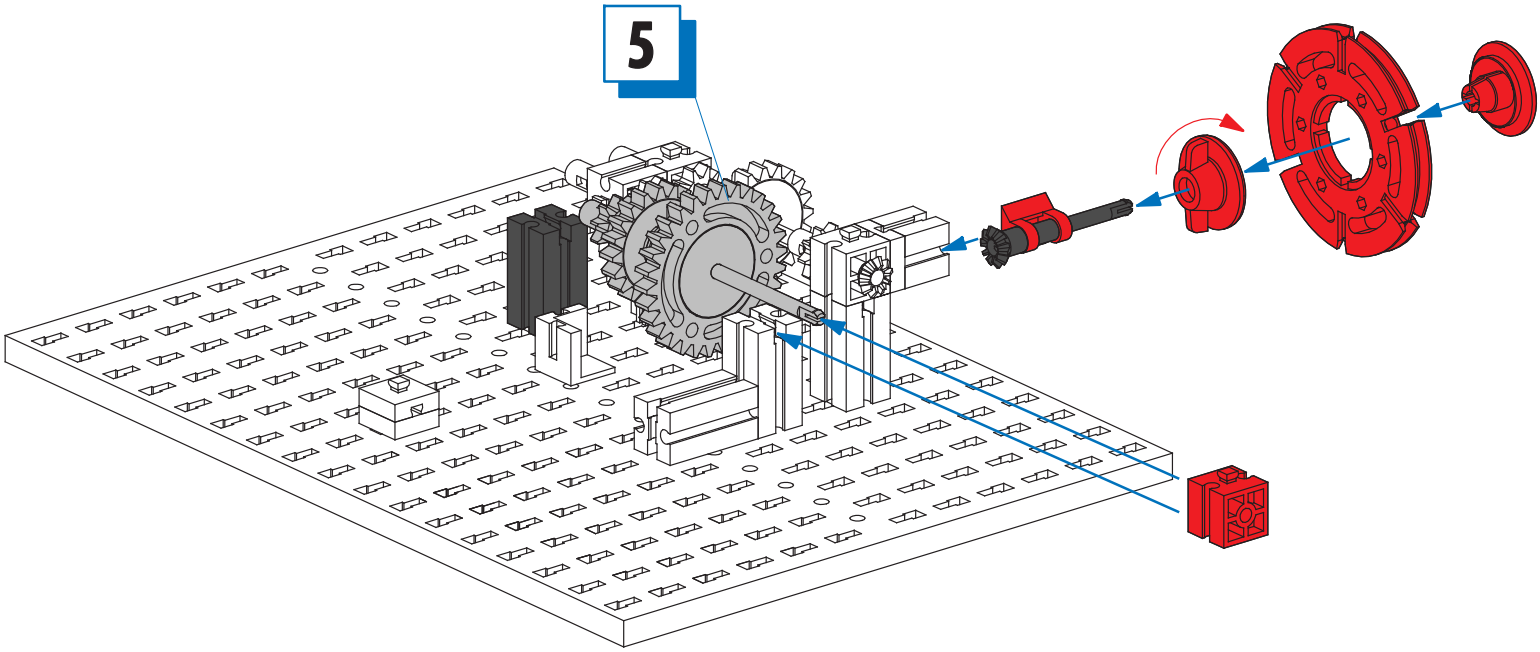

7

75

1 x

1 x

1 x

1 x

1 x

1 x

1 x

1 x

2 x

75

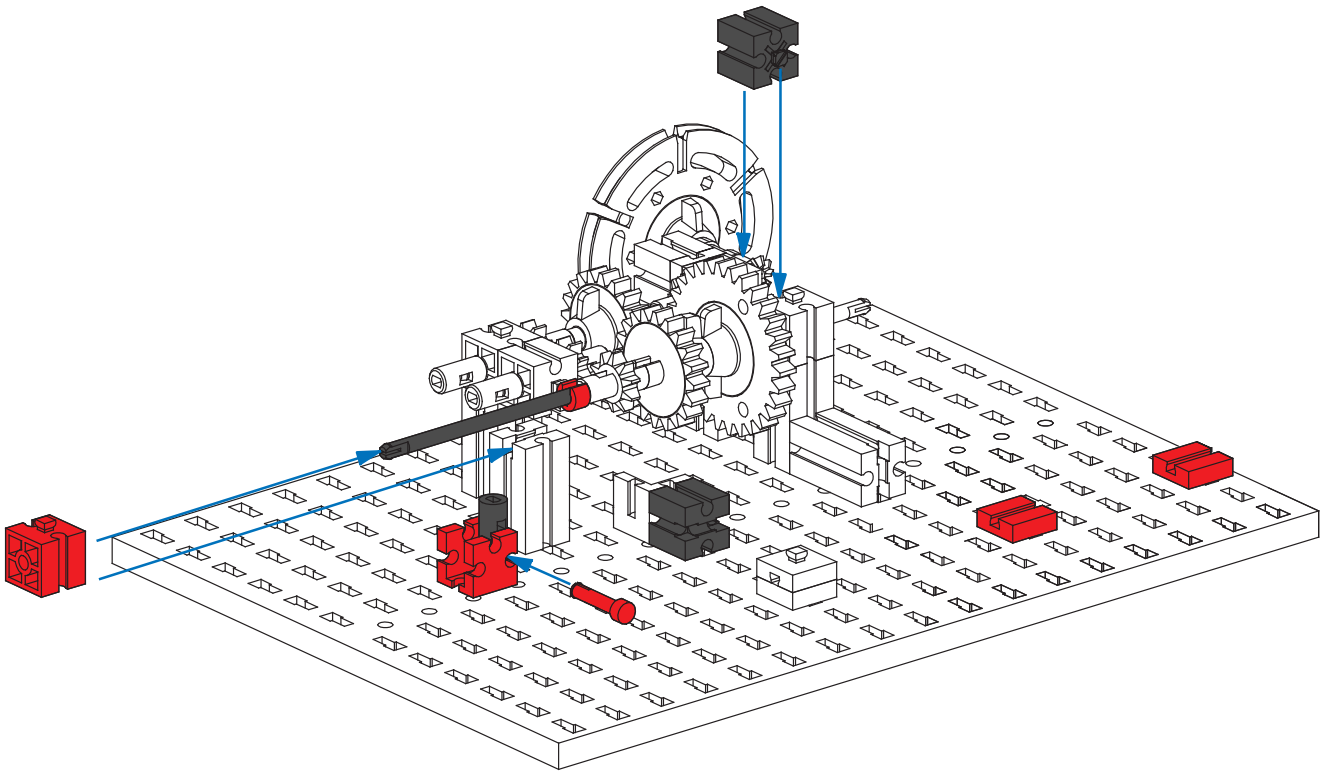

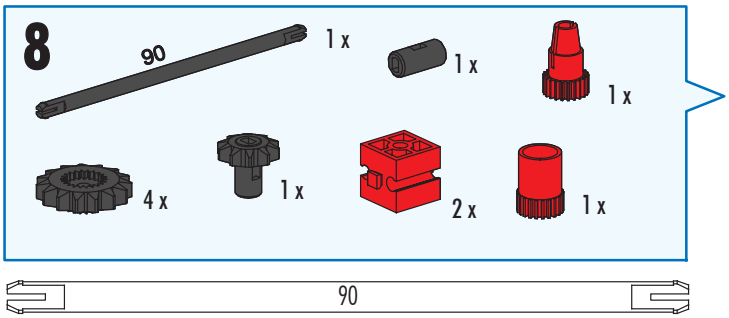
8
90
1 x
1 x
1 x
4 x
1 x
2 x
1 x
90

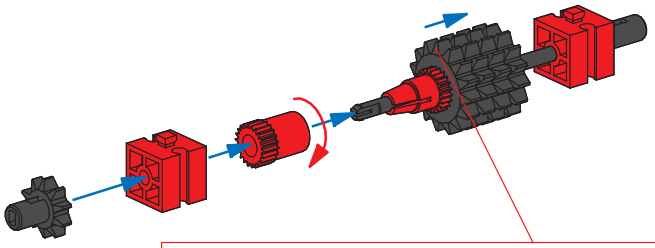

Markierung beachten!
Note marking!
Tenir compte des repères!
Let op de markering!
¡Tener en cuenta el marcaje!
Observar a marcação!
Osservare il contrassegno!
Учитывайте маркировку
注意标记！

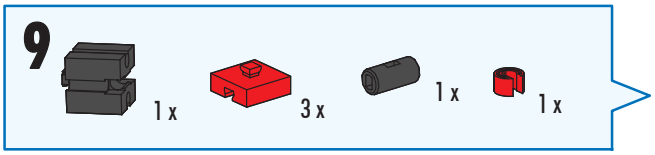
9
1 x
3 x
1 x
1 x

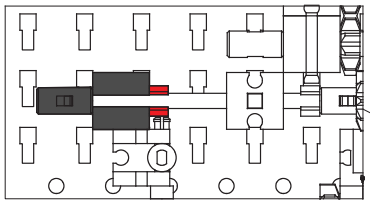

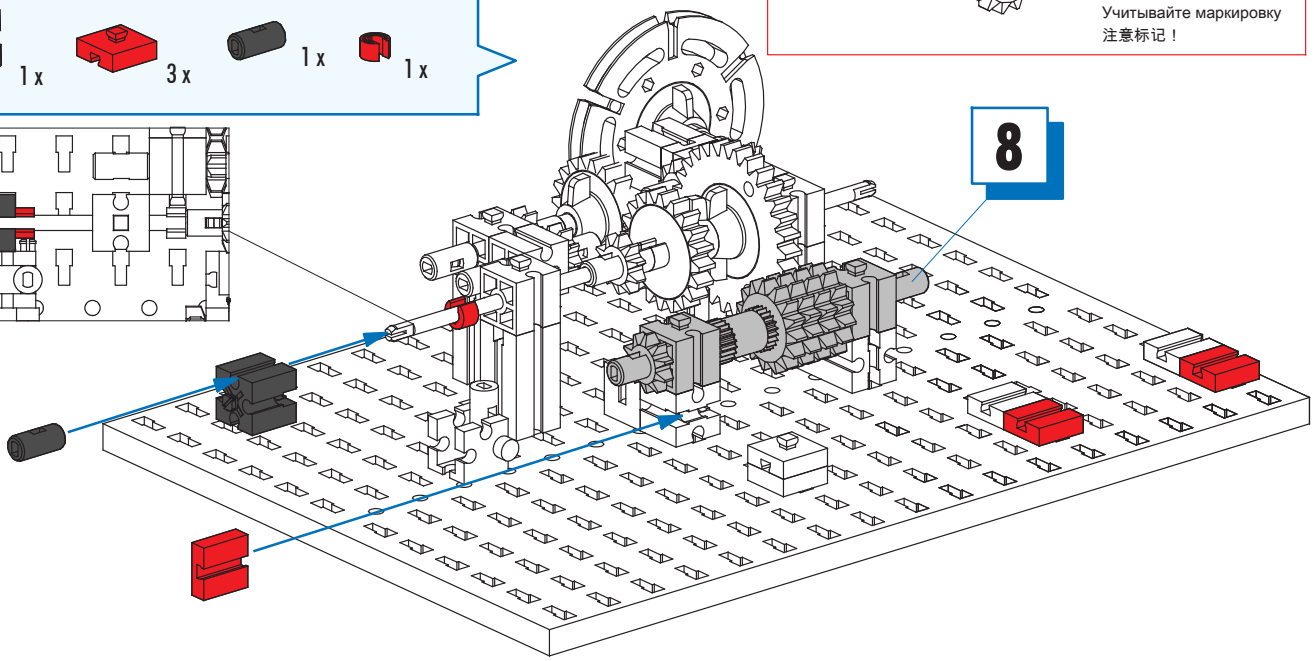
8

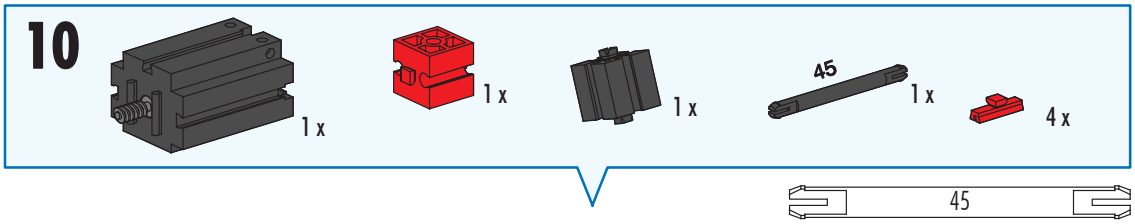
10
1 x
1 x
1 x
45
1 x
4 x
45

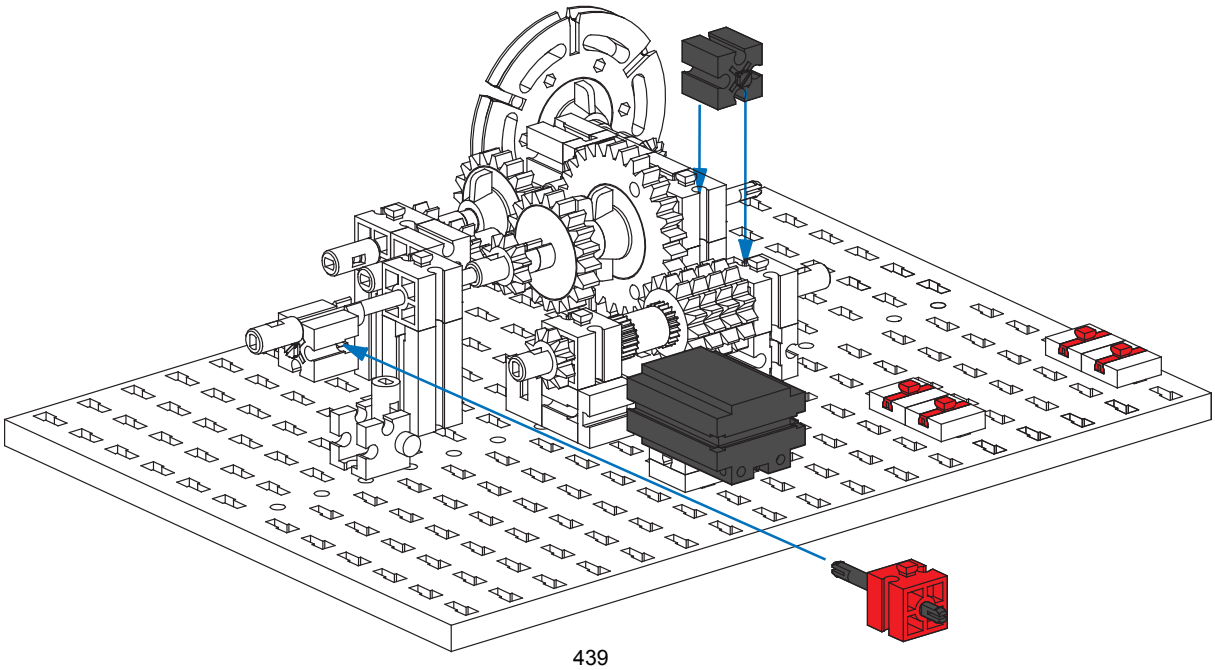

11

1 x

1 x

1 x

1 x

2 x

75

1 x

1 x

75

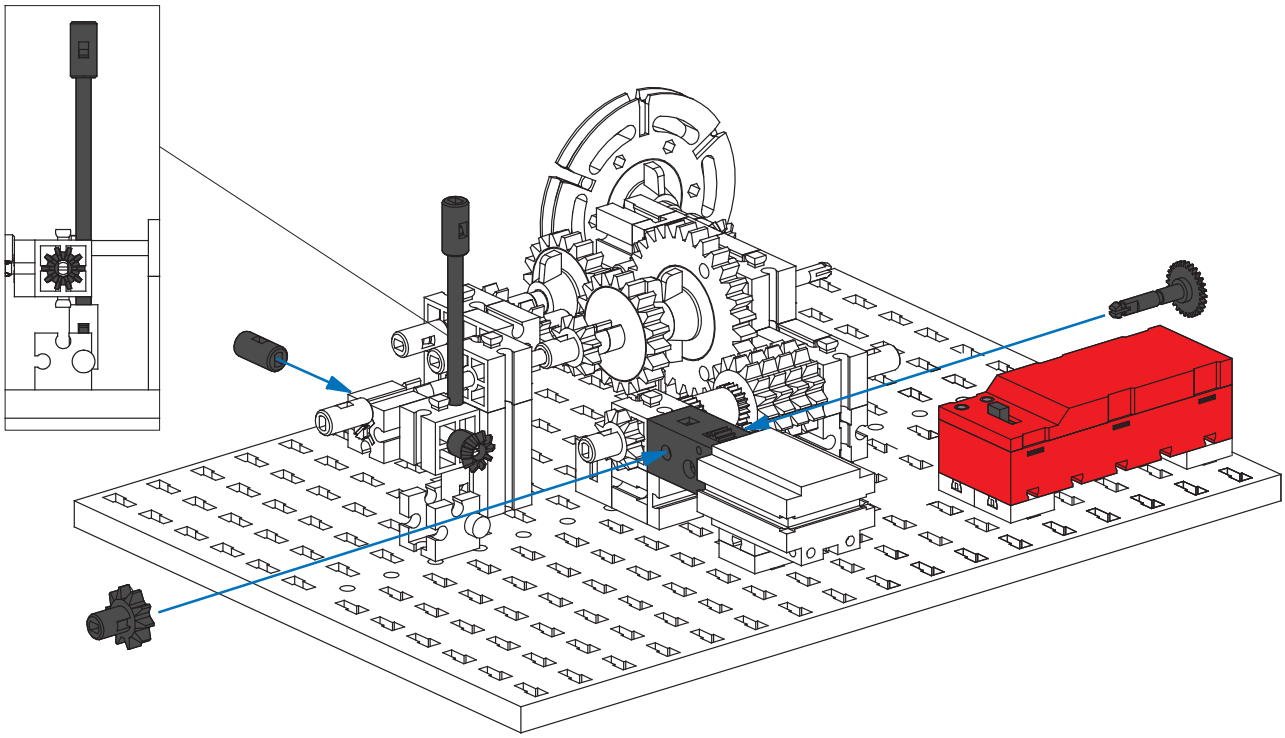

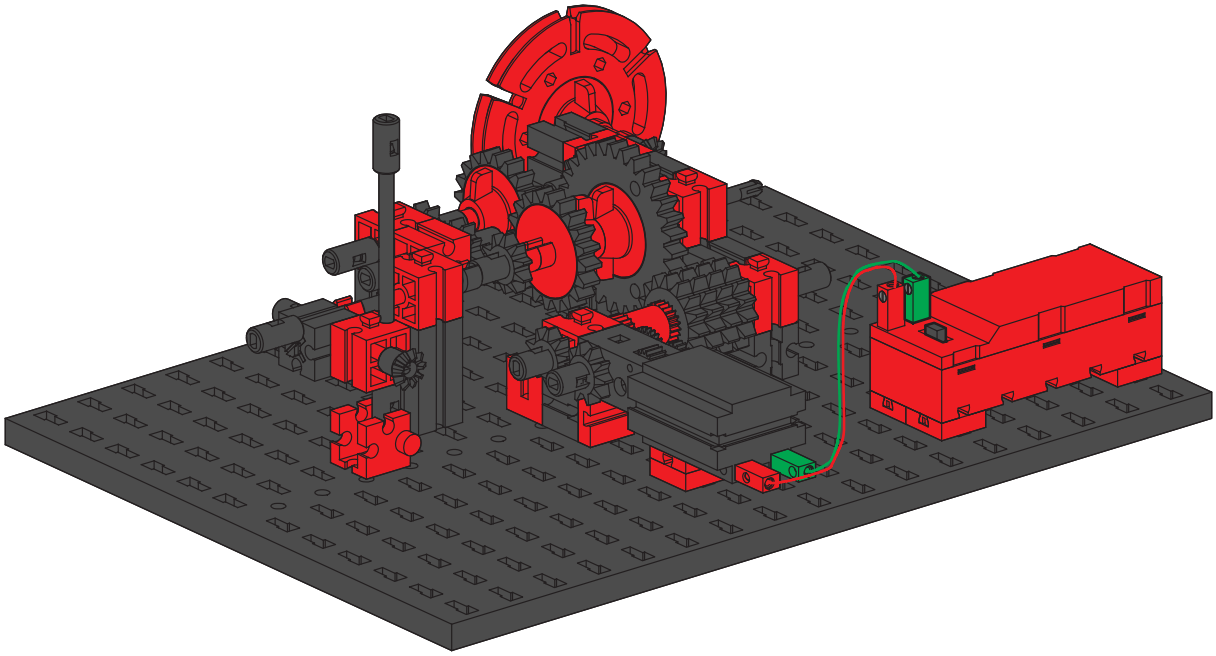

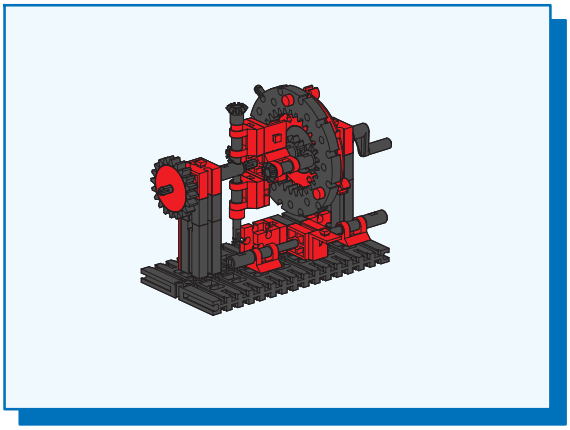

Planetengetriebe
Planetary gear
Engrenage planétaire
Planeetwieloverbrenging
Engranaje planetario
Engrenagem planetária
Rotismo epicicloidale
Планетарный редуктор
行星齿轮机构

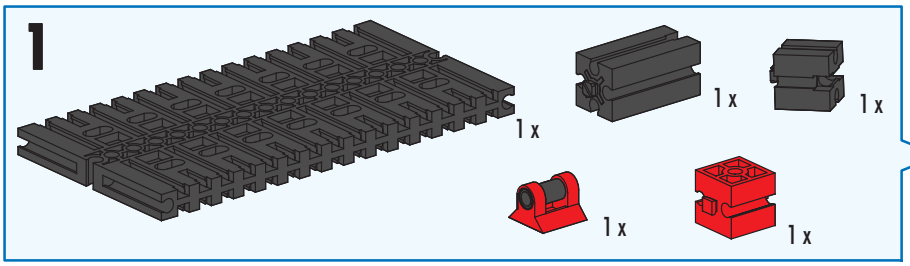

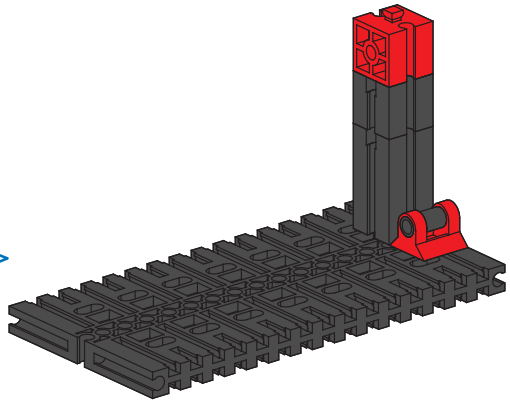

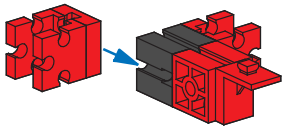

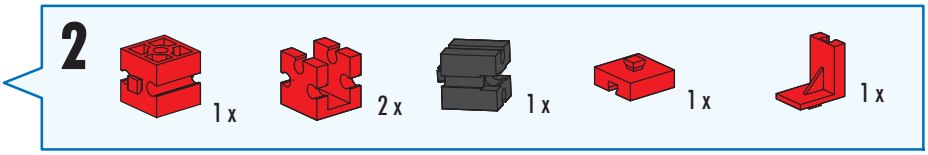

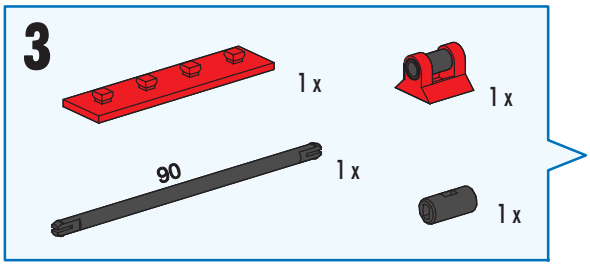

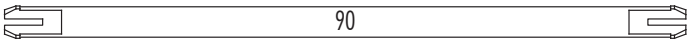

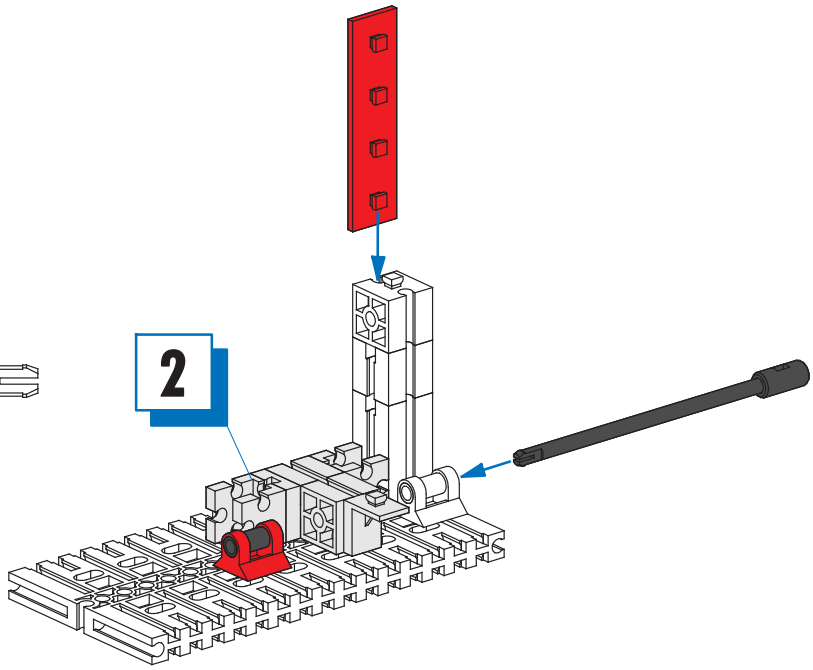

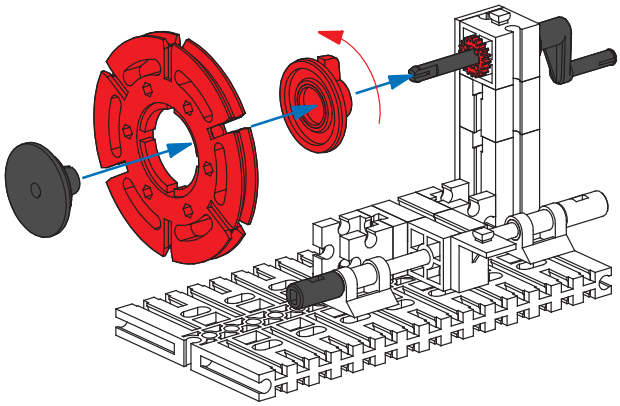

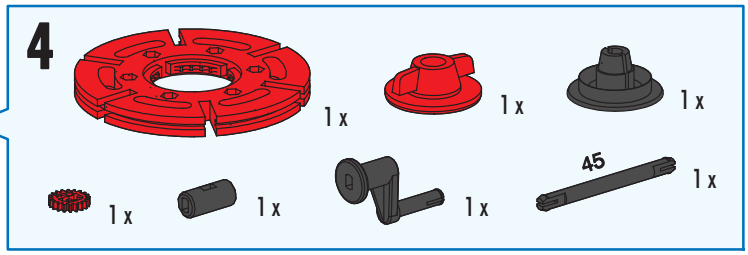

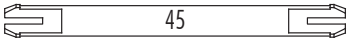

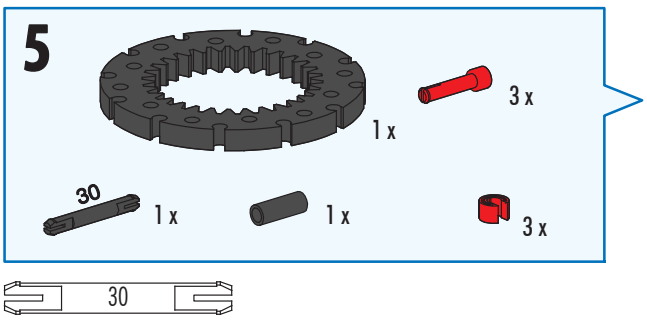
5
1 x
3 x
30
1 x
1 x
3 x
30

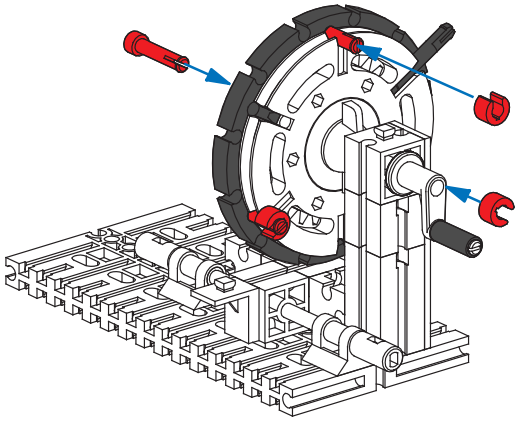

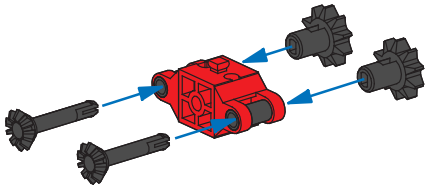

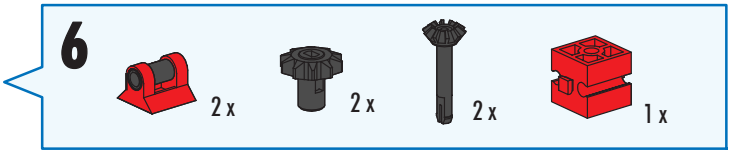
6
2 x
2 x
2 x
1 x

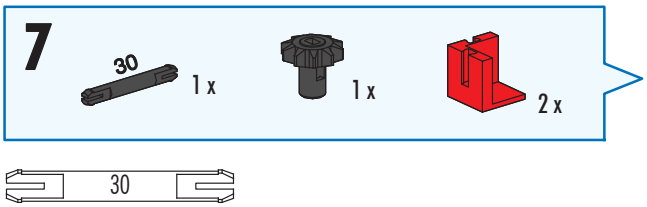
7
30
1 x
1 x
2 x
30

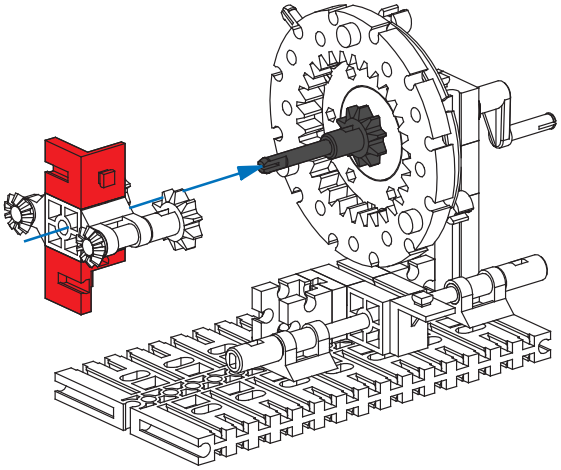

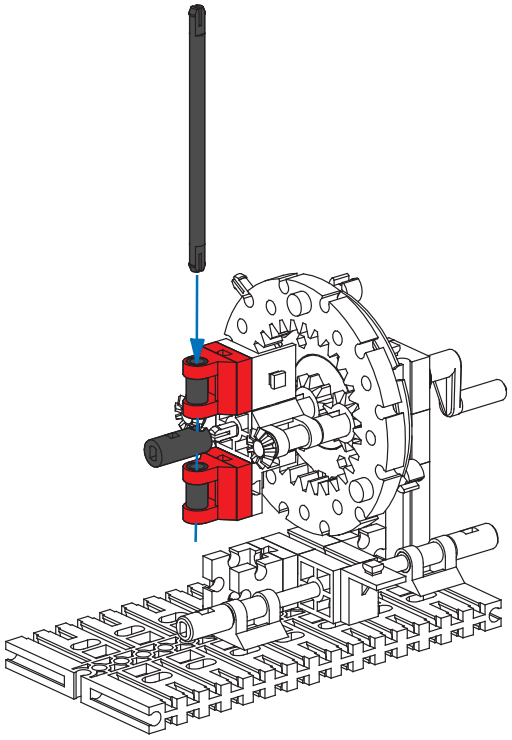

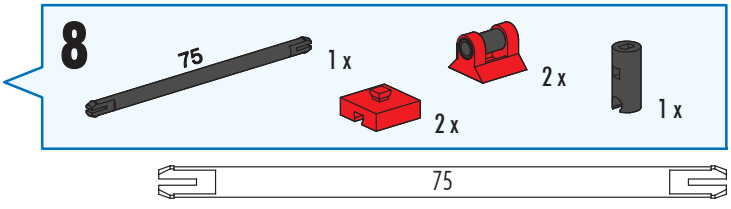
8
75
1 x
2 x
2 x
1 x
75

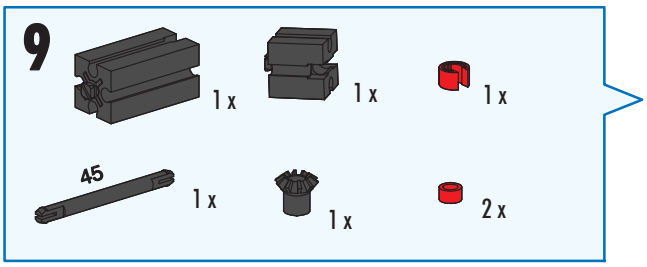
9
1 x
1 x
1 x
45
1 x
1 x
2 x
45

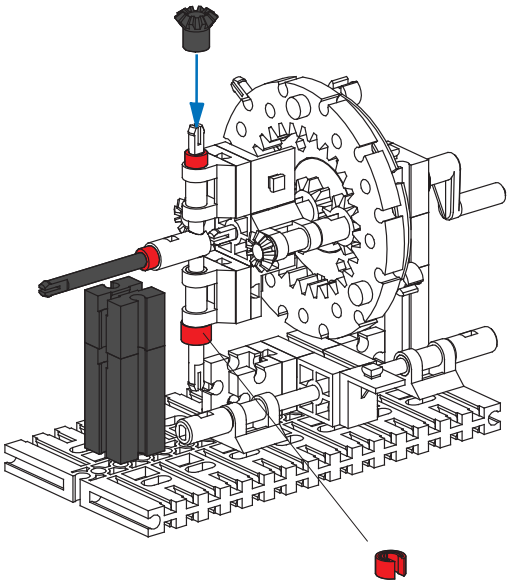

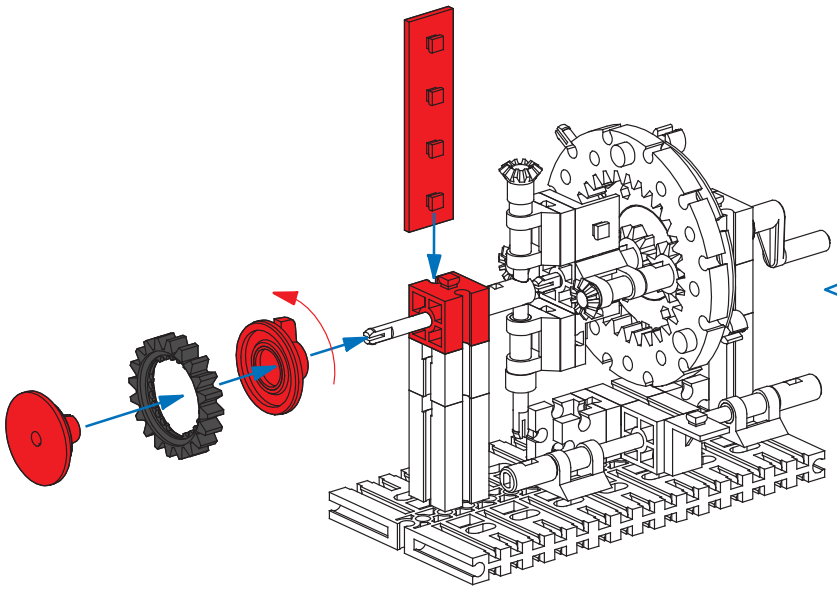

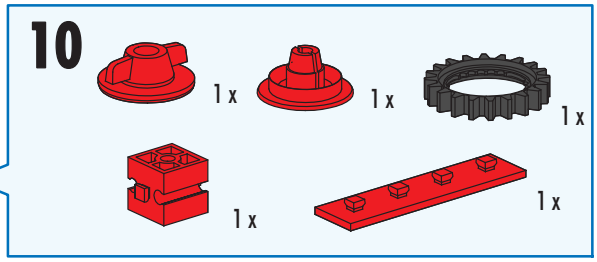
10
1 x
1 x
1 x
1 x
1 x

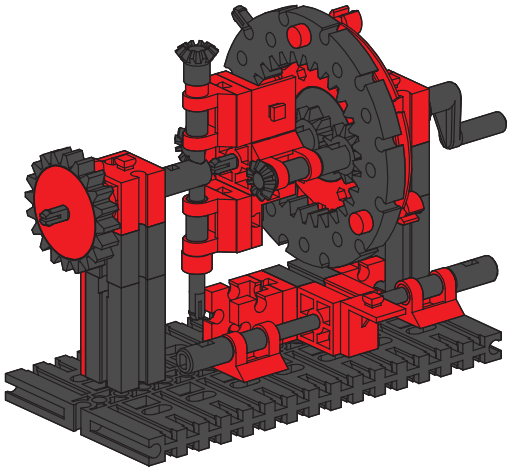

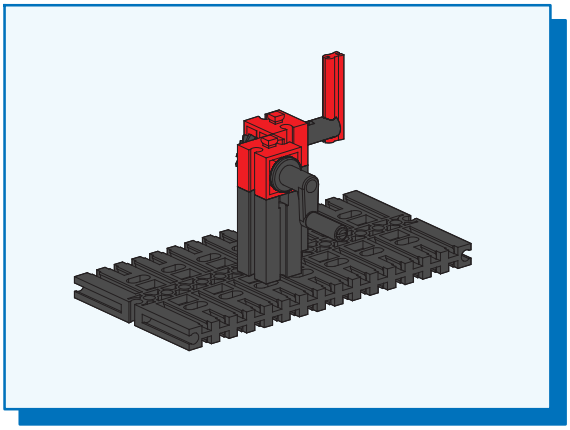

Kegelradgetriebe
Bevel gear
Engrenage à pignon conique
Conische tandwieloverbrenging
Engranaje de ruedas cónicas
Engrenagem cônica
Ingranaggio conico
Конический редуктор
锥齿轮传动机构

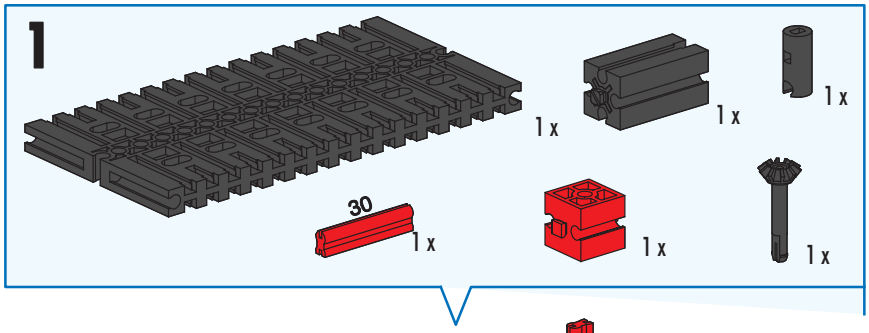

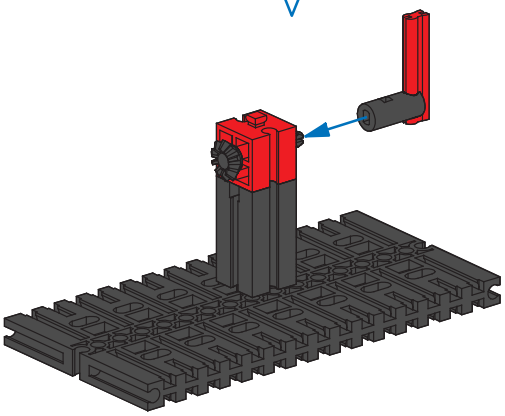

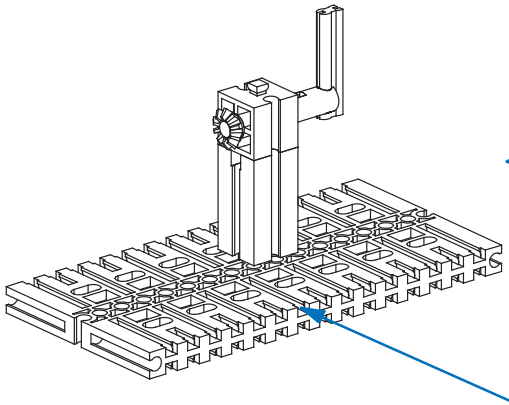

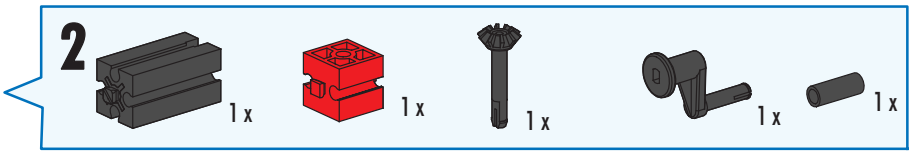

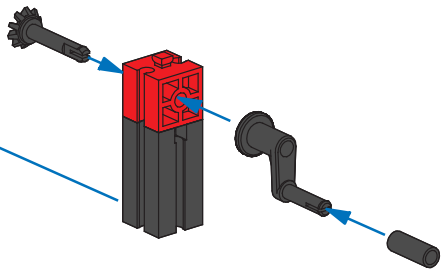

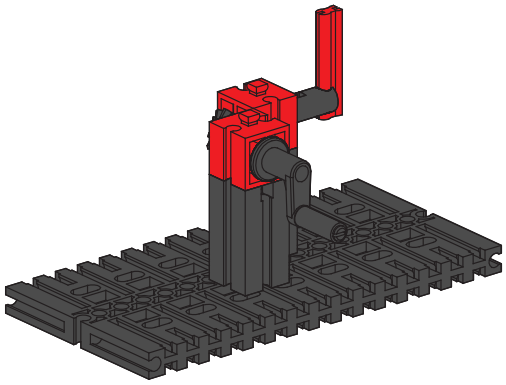

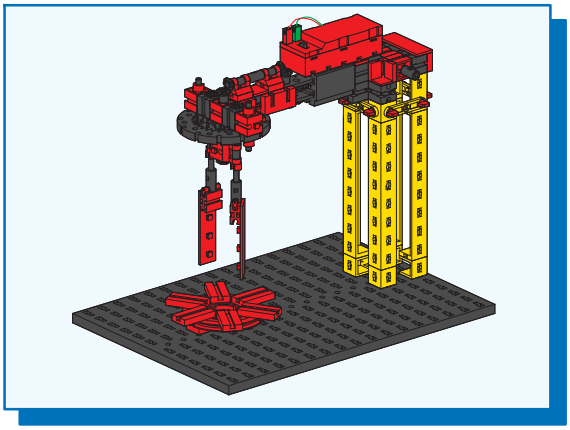

Küchenmaschine
Kitchen appliance
Robot ménager

Keukenmachine
Máquina de cocina
Máquinas de cozinha

Robot da cucina
Кухонный комбайн
电动厨具

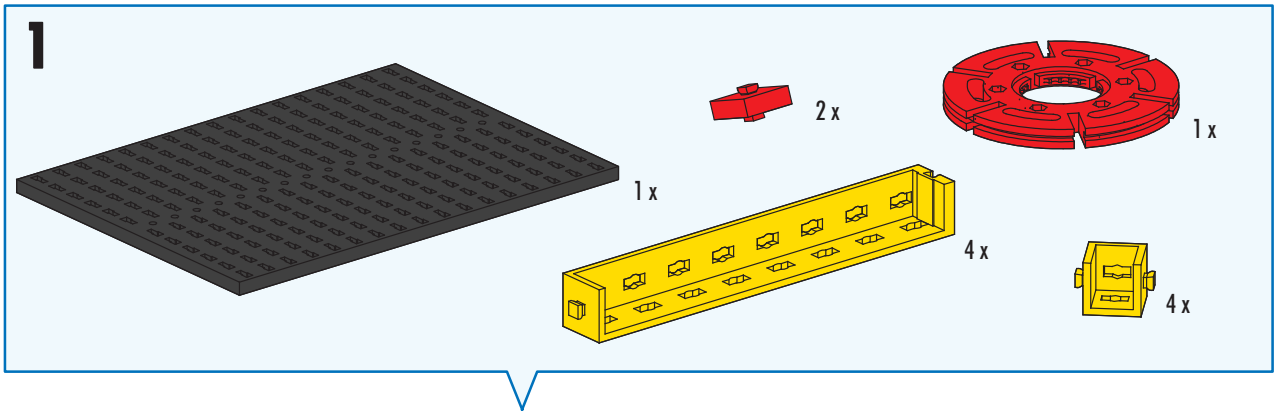

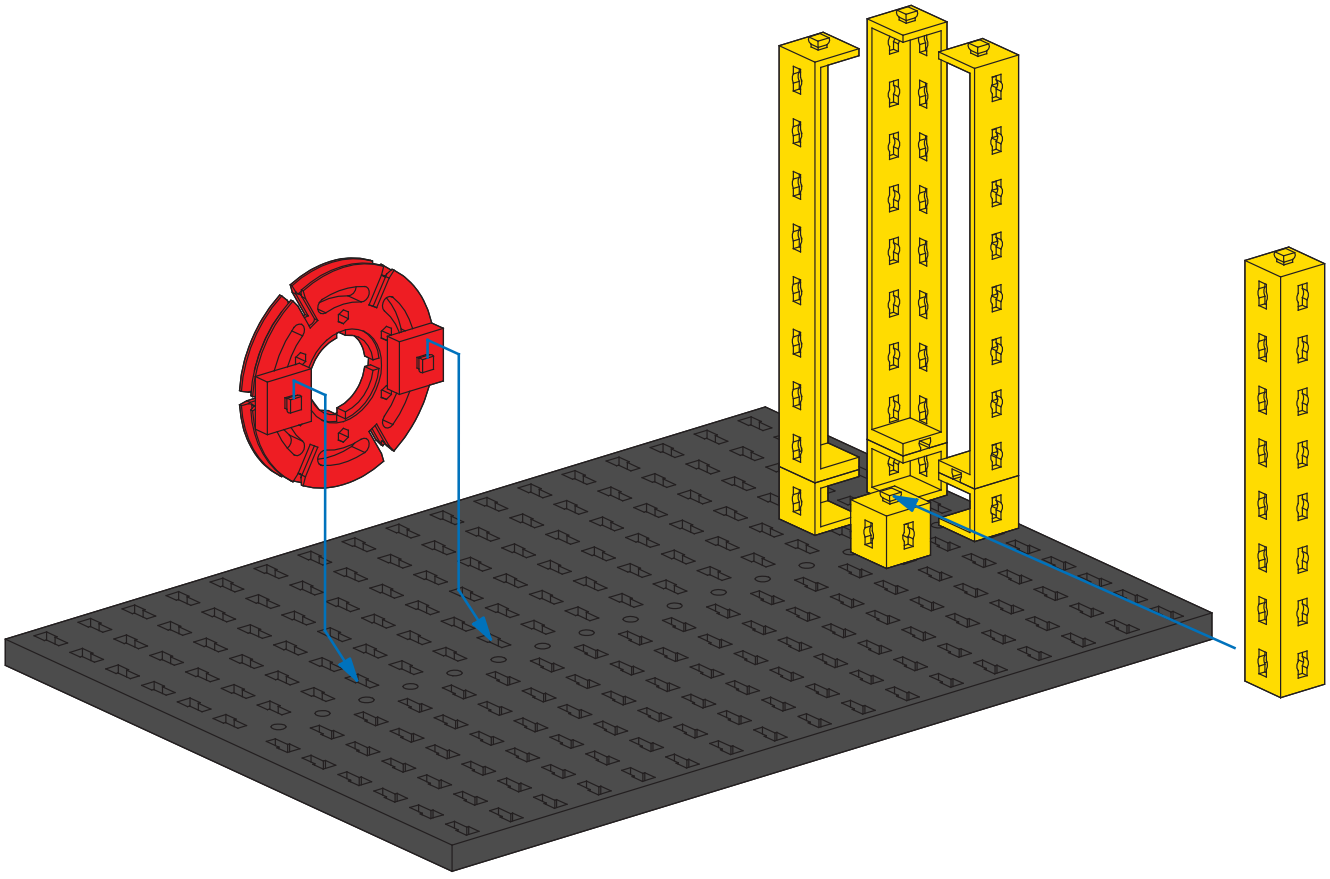

2

2 x

2 x

8 x

6 x

4 x

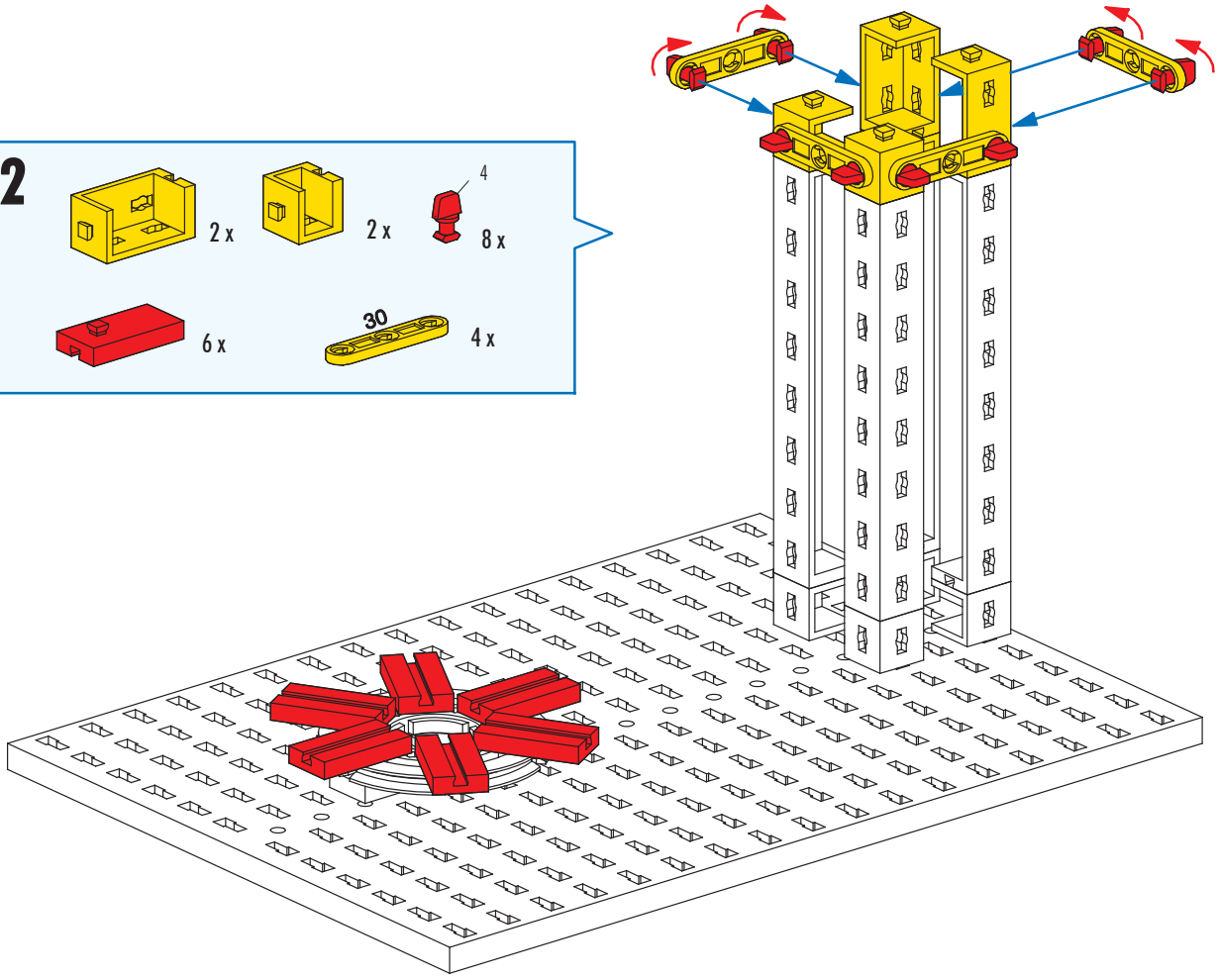

3

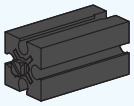
1 x

4 x

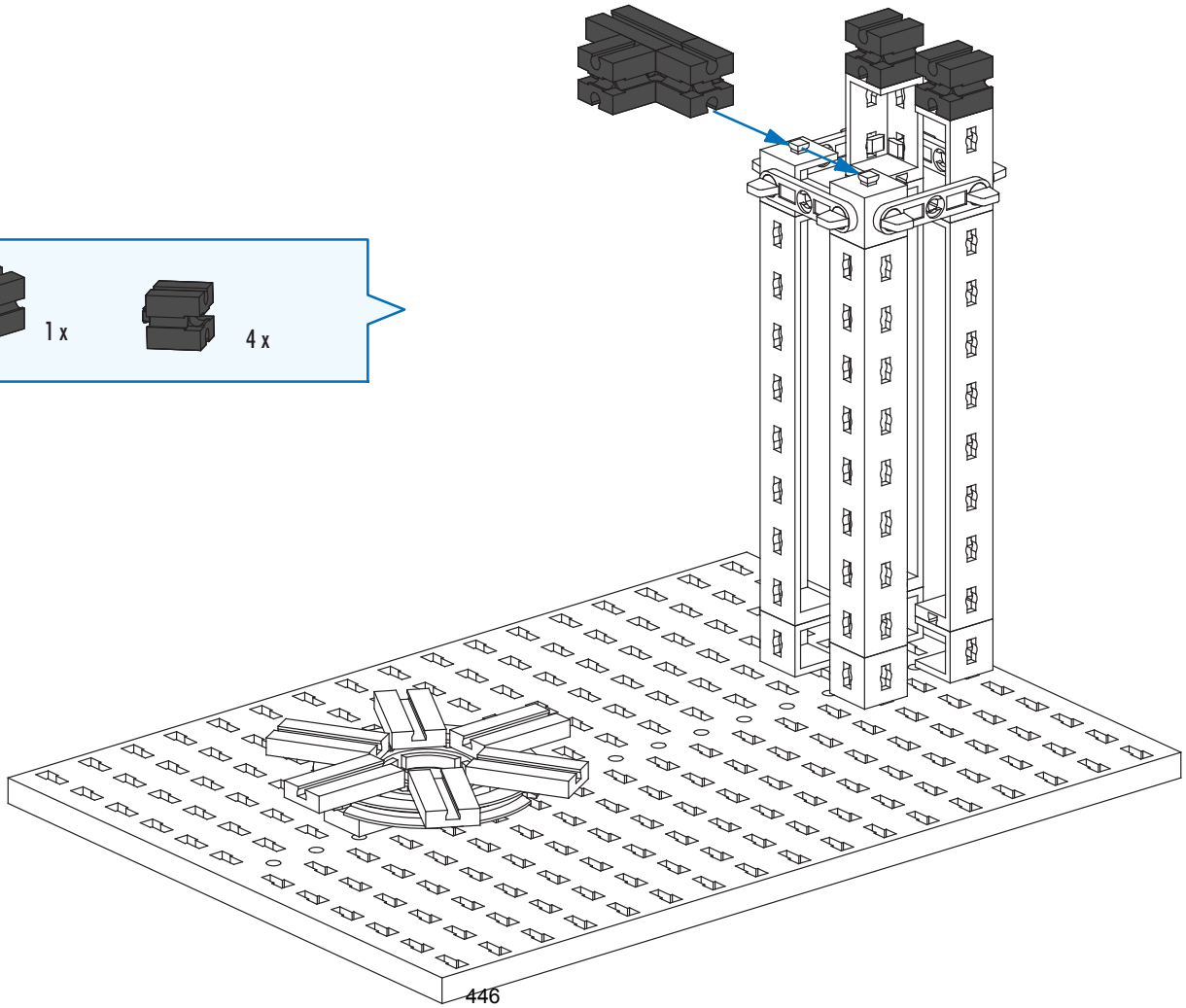

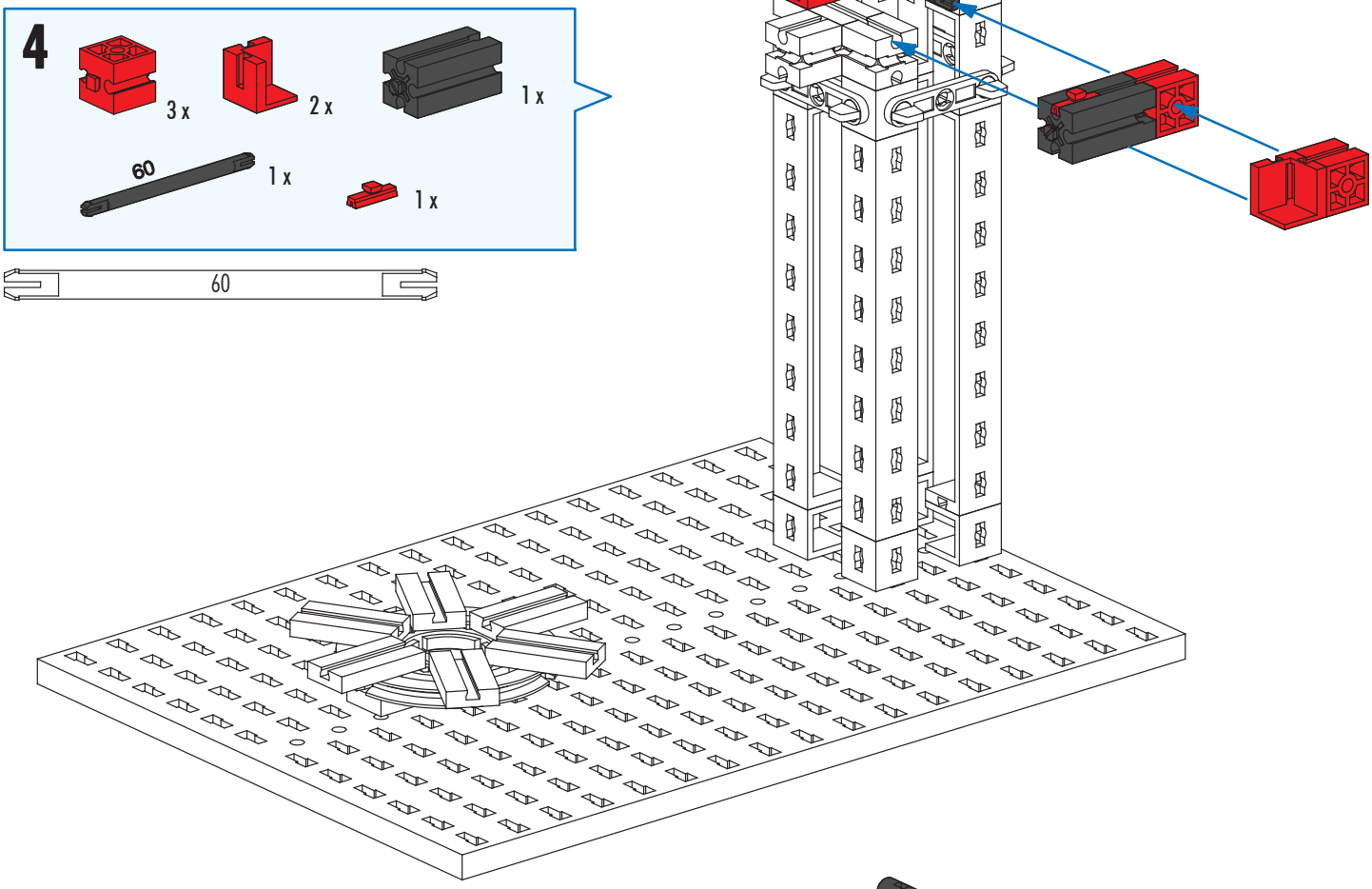
4
3 x
2 x
1 x
60
1 x
1 x
60

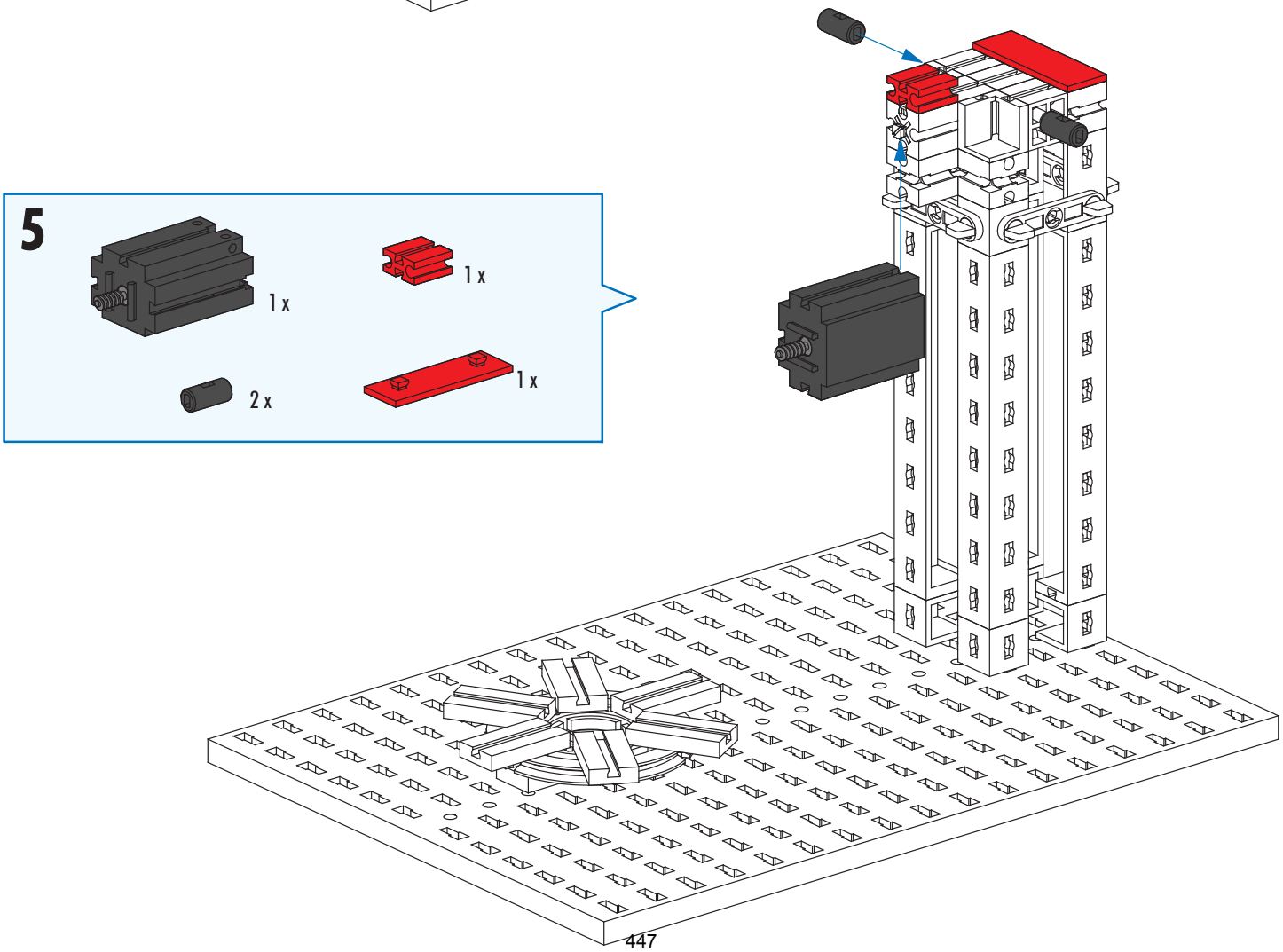
5
1 x
1 x
2 x
1 x

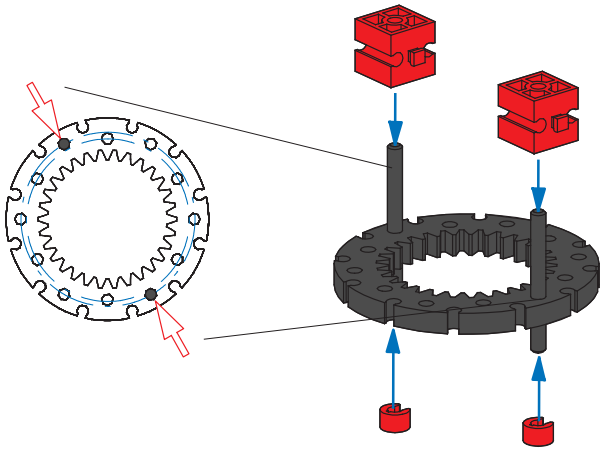

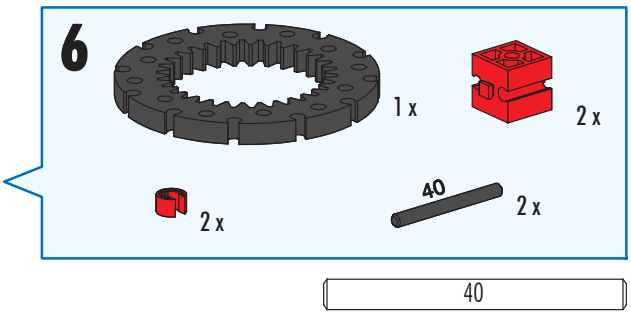
6
1 x
2 x
2 x
40
2 x
40

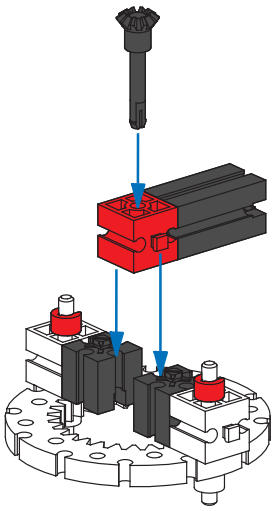

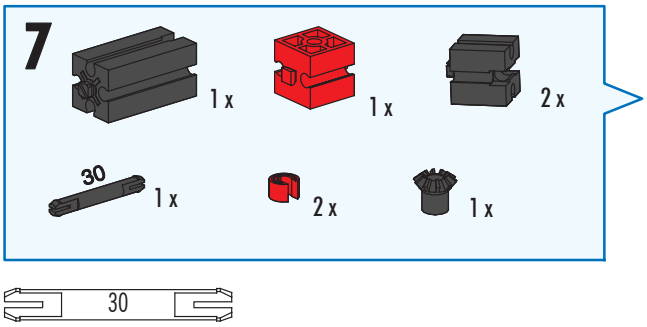
7
1 x
1 x
2 x
30
1 x
2 x
1 x
30

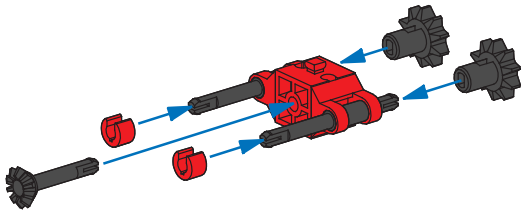

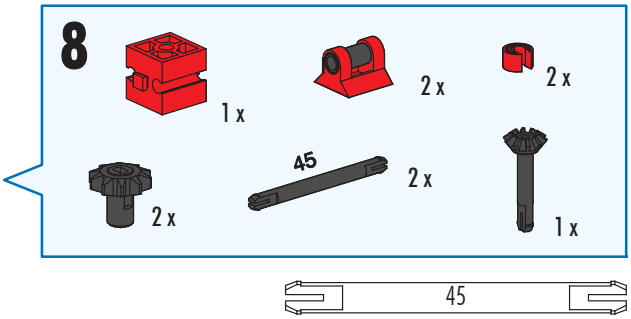
8
1 x
2 x
2 x
2 x
45
2 x
1 x
45

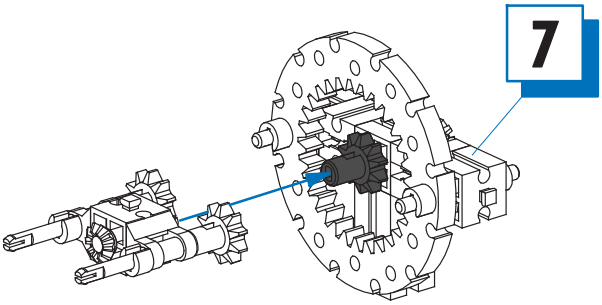
7

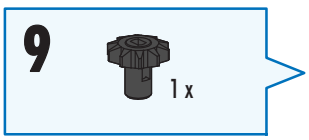
9
1 x

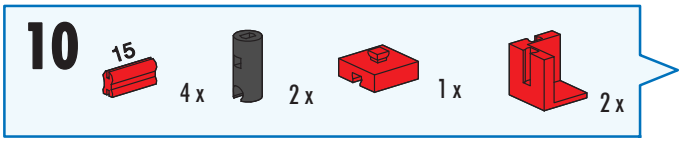
10
15
4 x
2 x
1 x
2 x

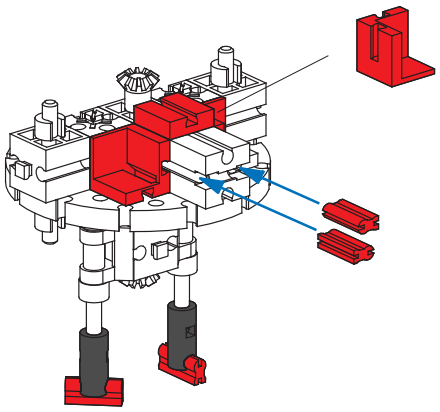

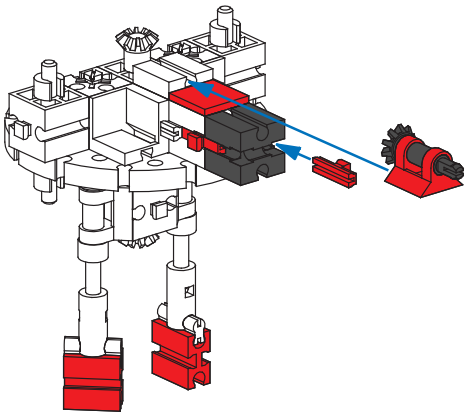

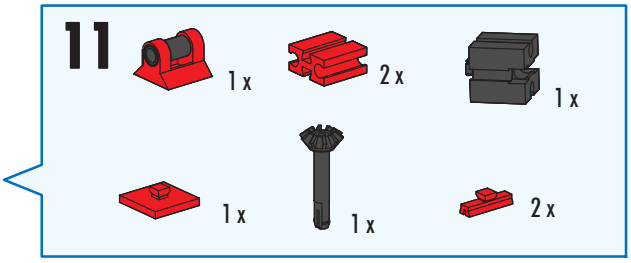
11
1 x
2 x
1 x
1 x
1 x
2 x

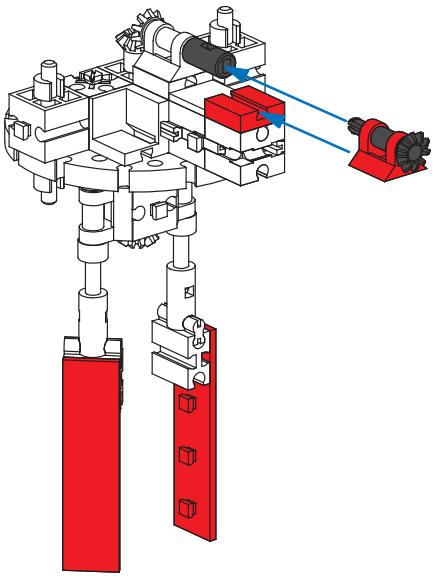

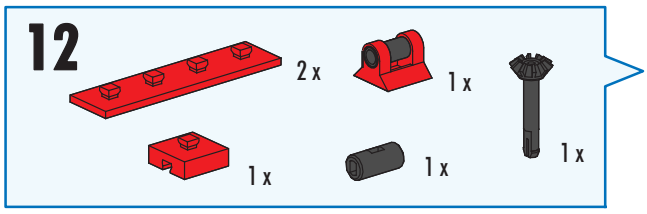
12
2 x
1 x
1 x
1 x
1 x

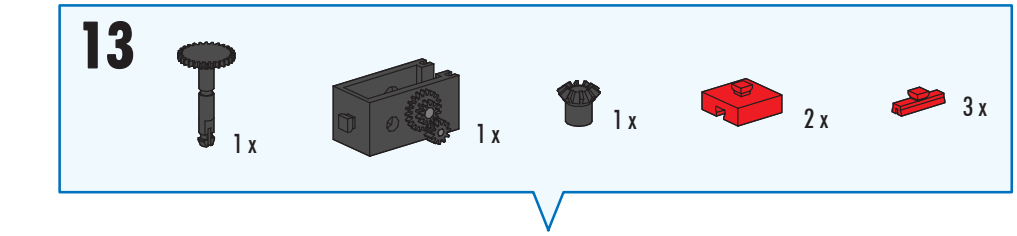
13
1 x
1 x
1 x
2 x
3 x

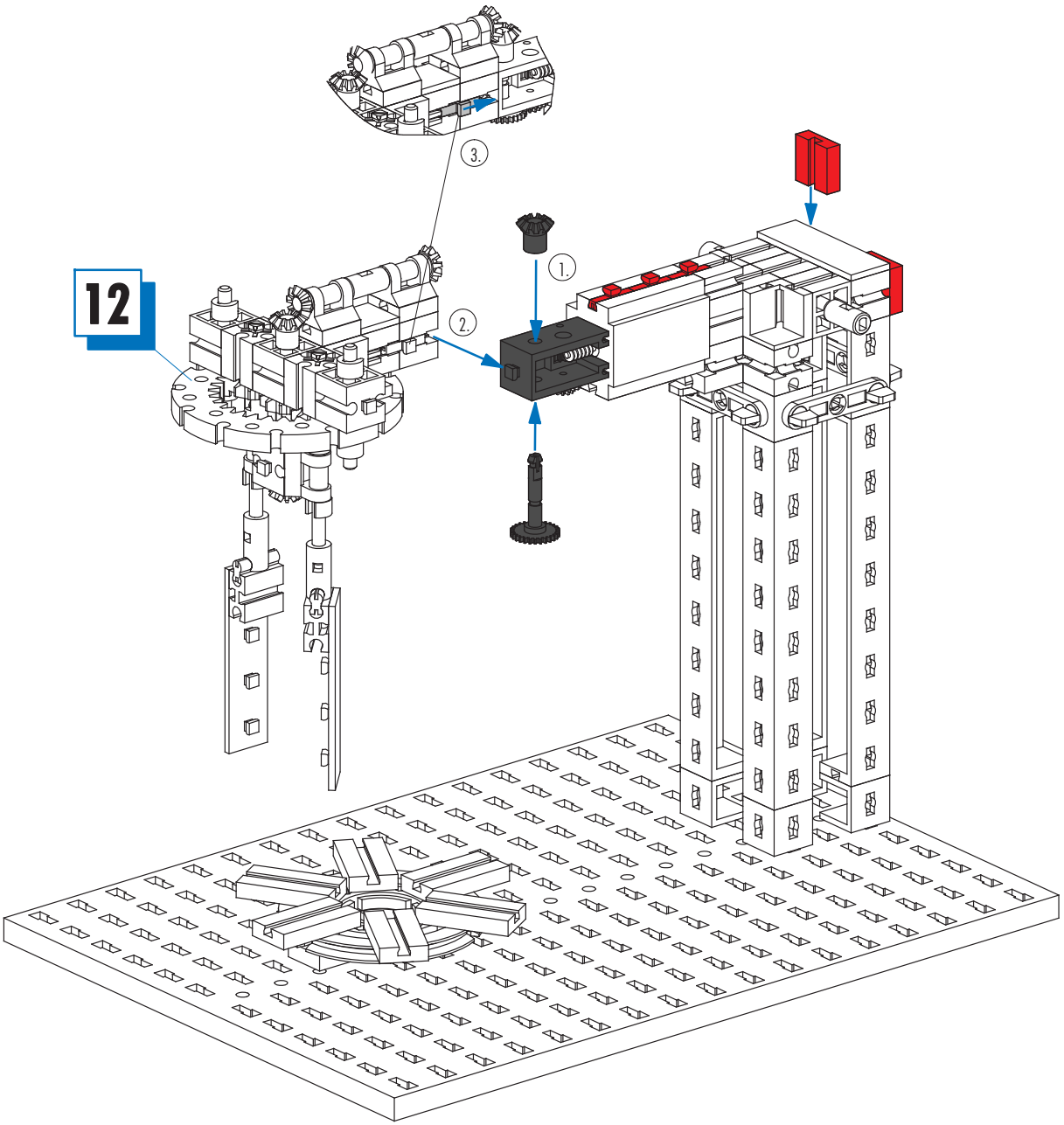
12
1.
2.
3.

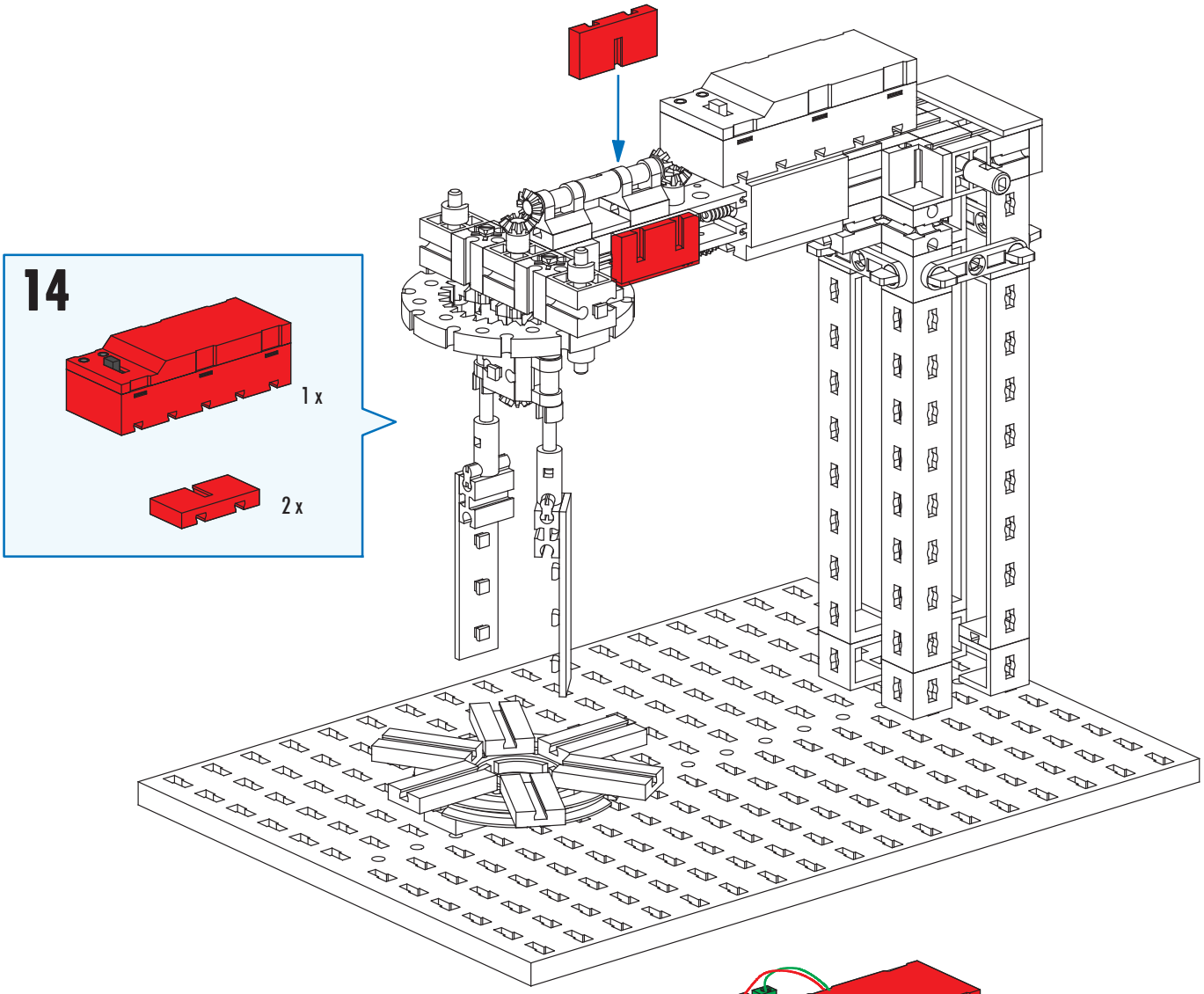
14
1 x
2 x

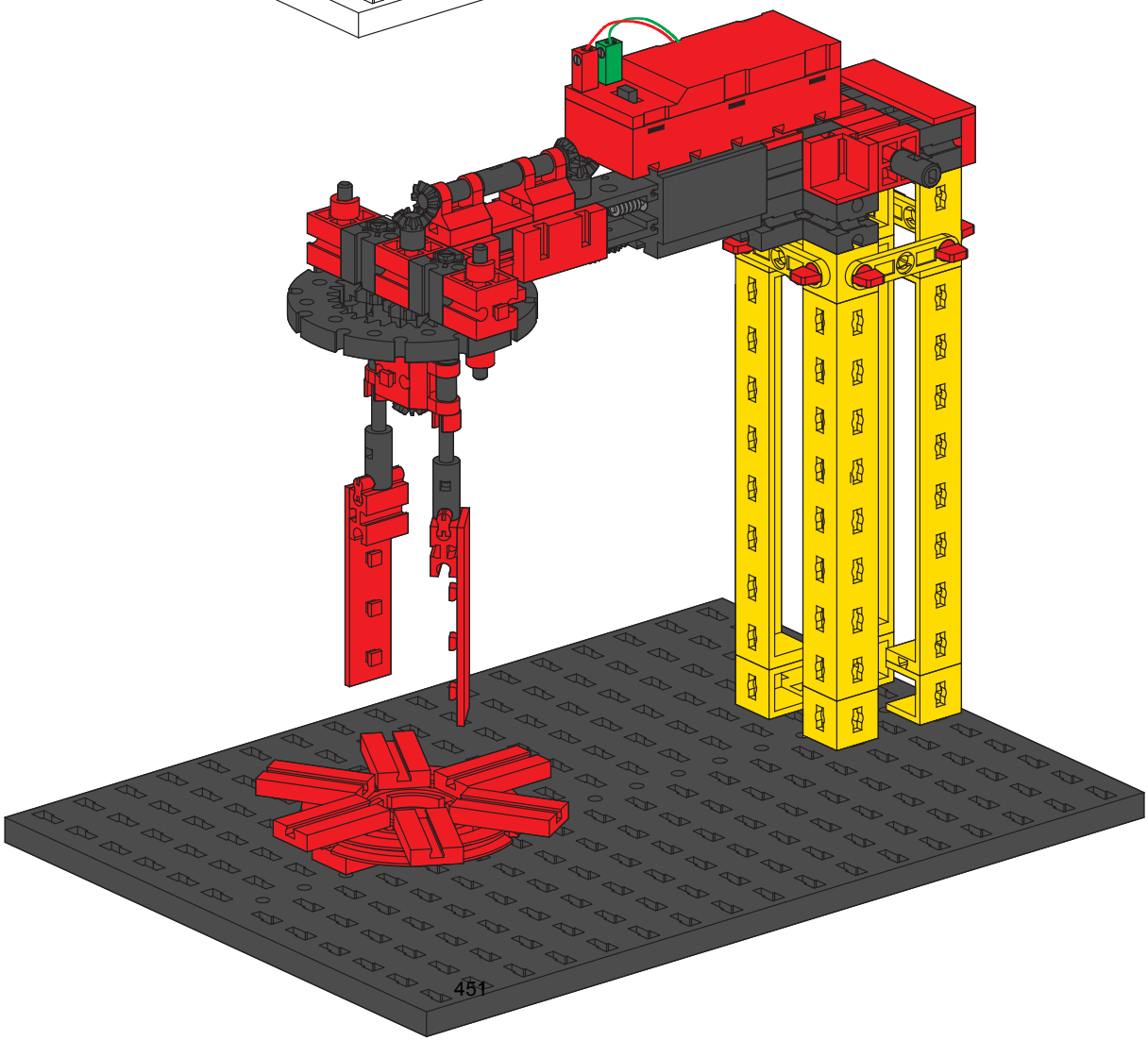
451

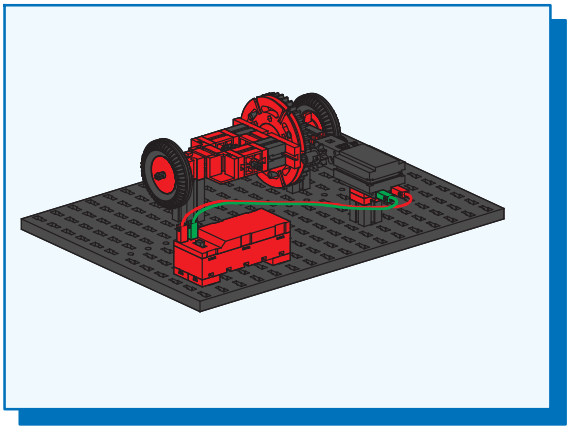

Differentialgetriebe
Differential gear
Engrenage différentiel

Differentieel
Engranaje diferencial
Transmissão diferencial

Differenziale
Дифференциал
差速机构

1

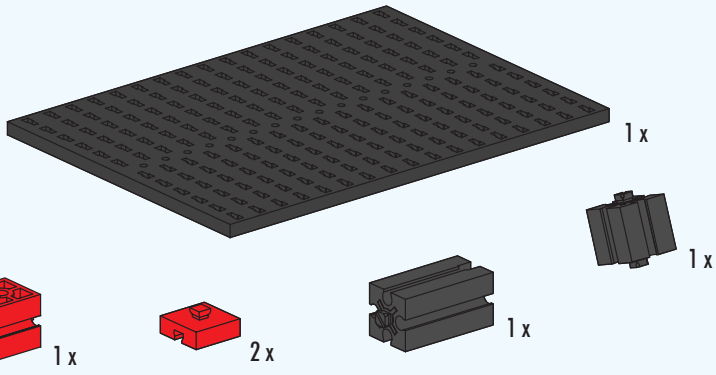

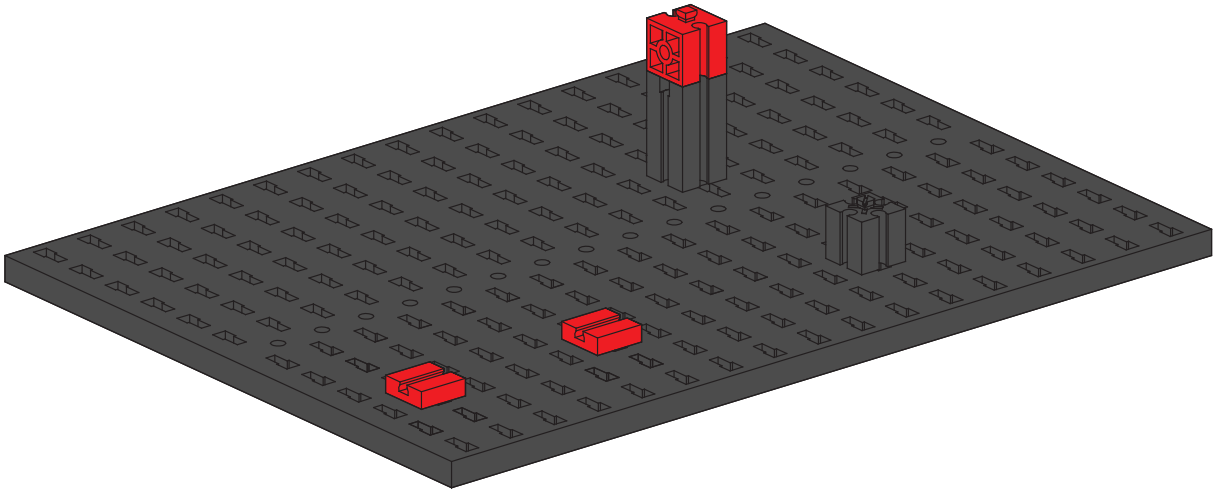

2

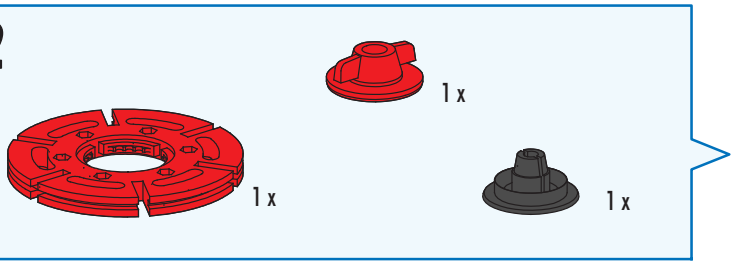

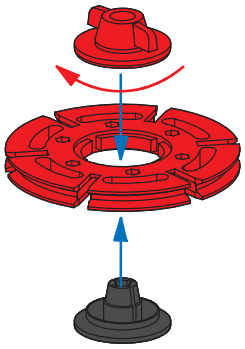

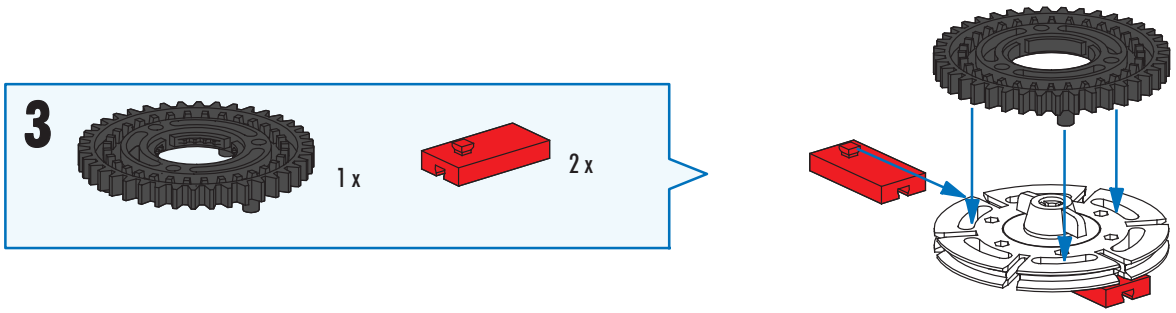

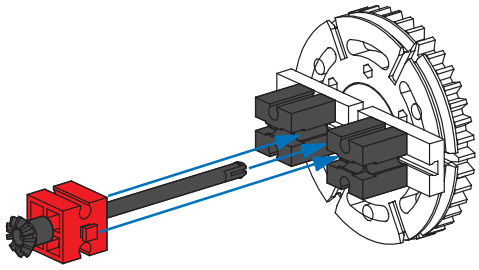

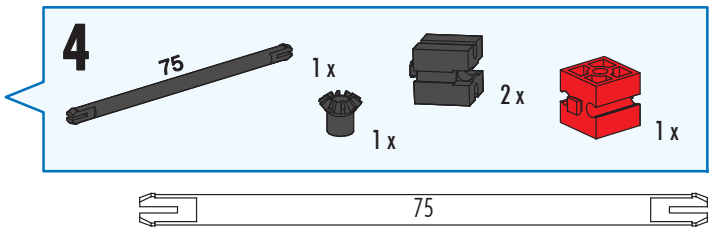

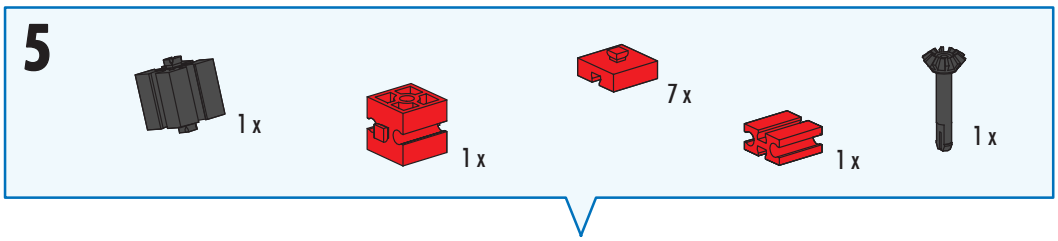

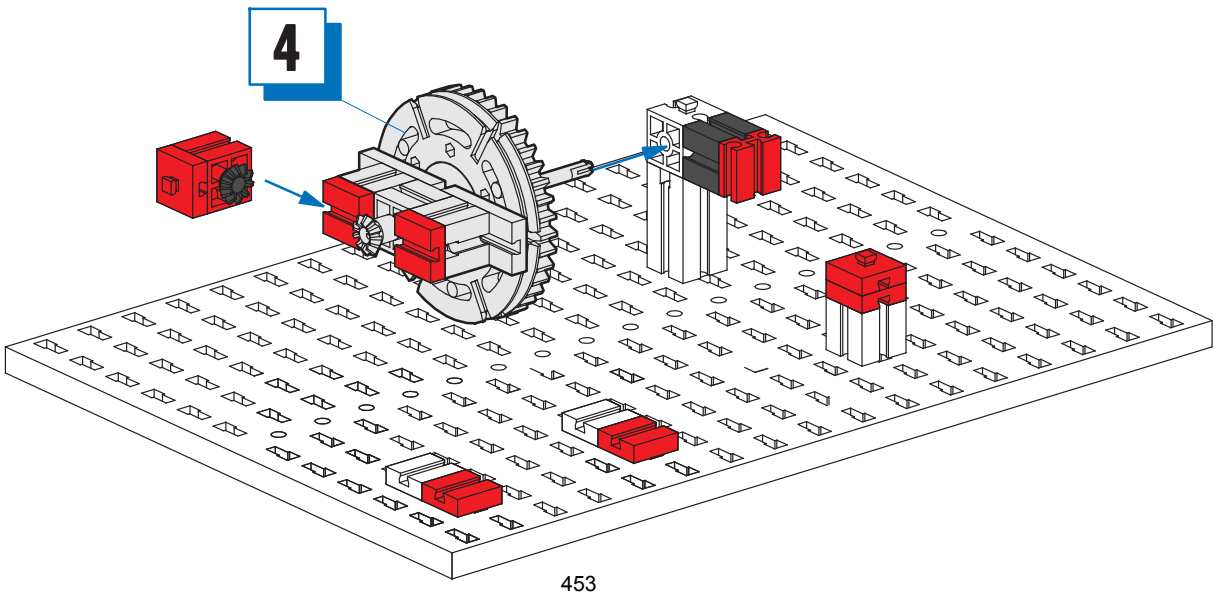

453

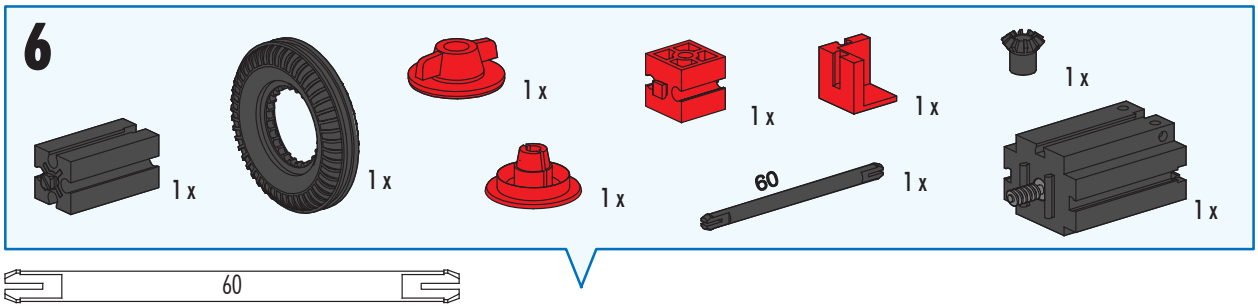
6
1 x
1 x
1 x
1 x
1 x
1 x
60
1 x
1 x

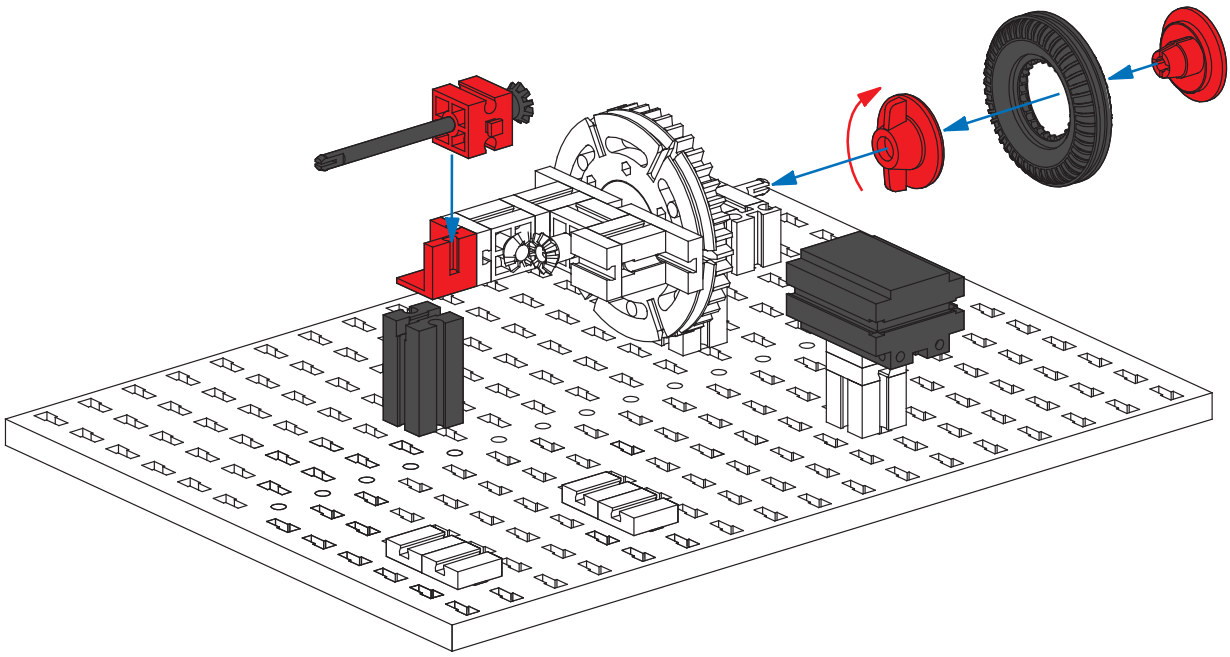

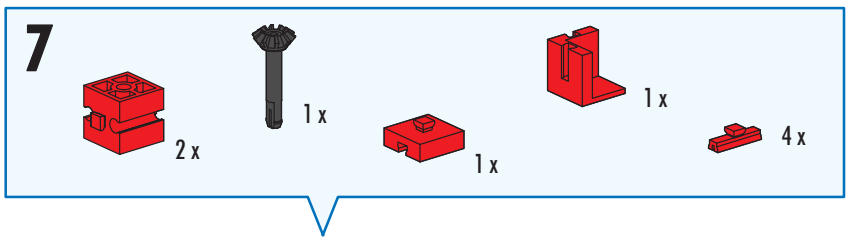
7
2 x
1 x
1 x
1 x
4 x

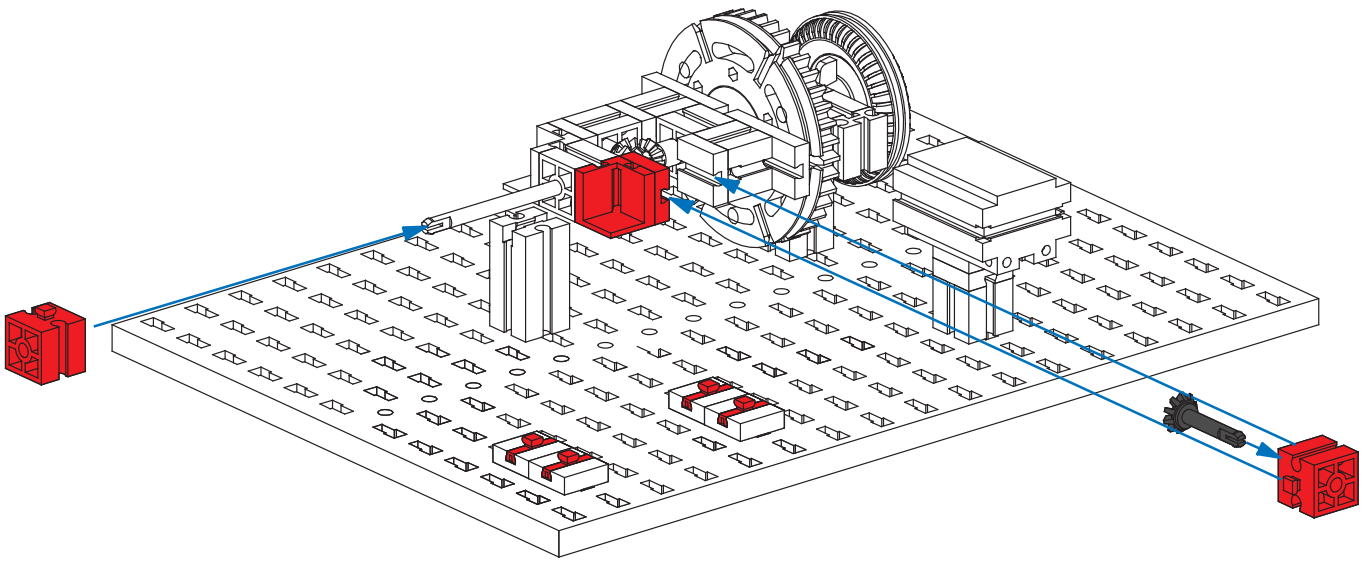

8

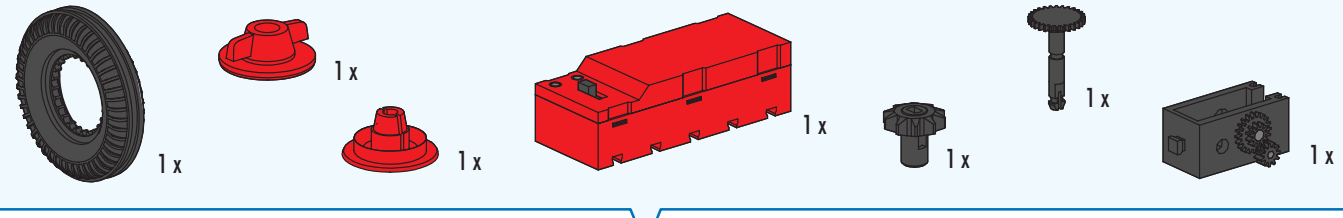

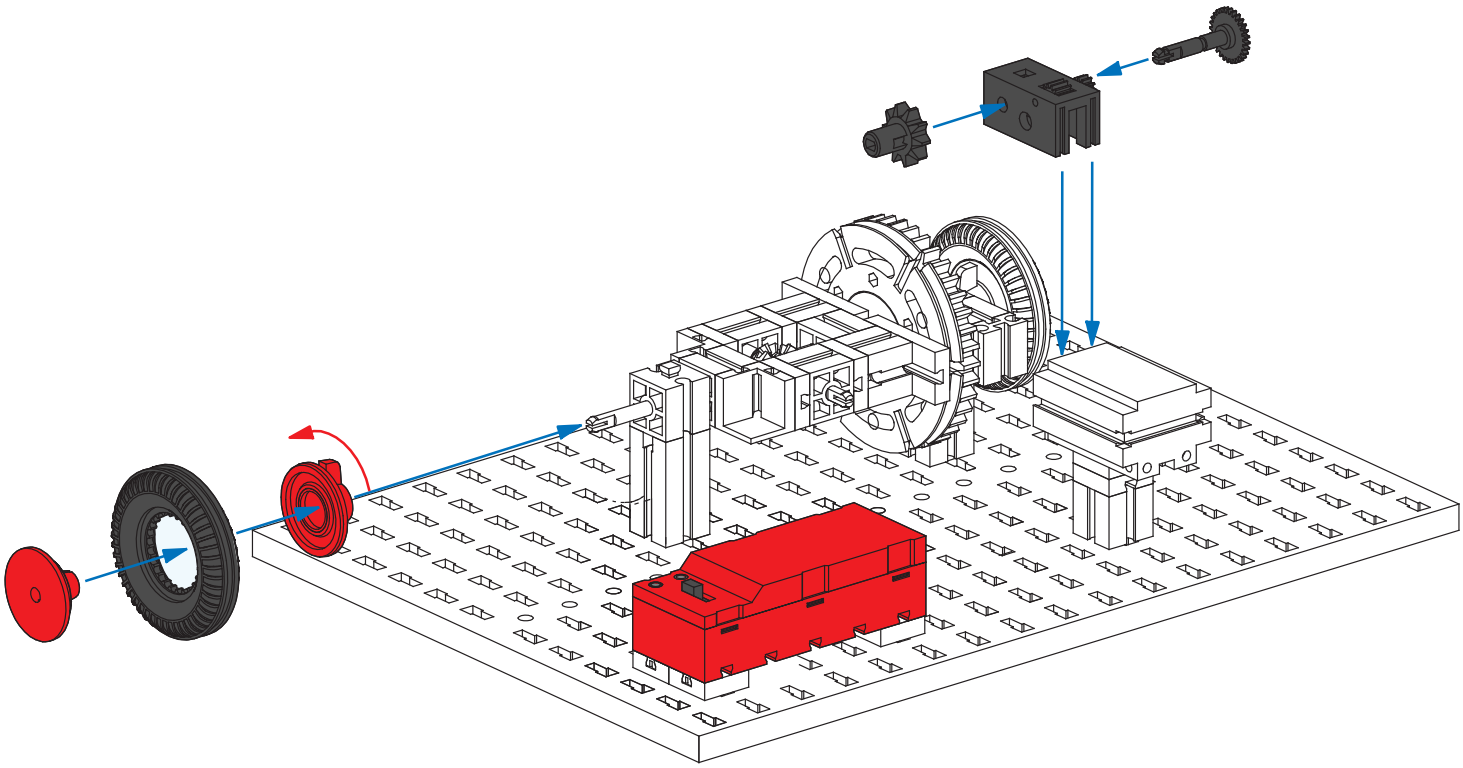

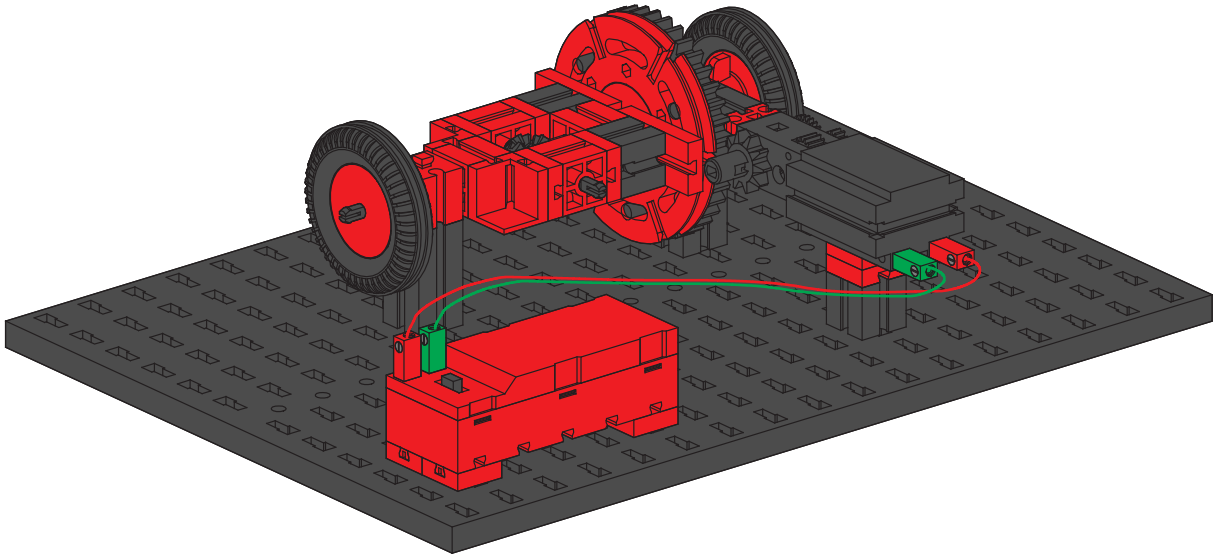

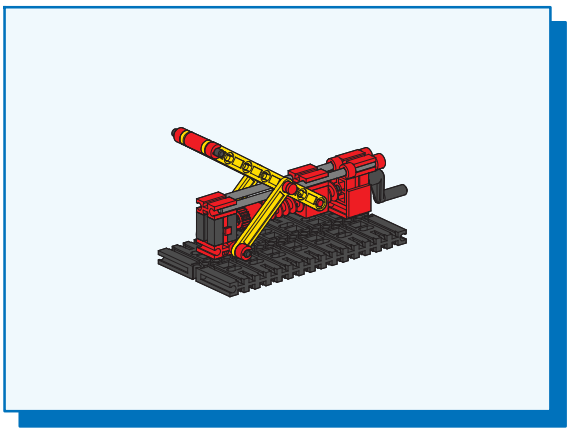

Wagenheber
Car jack
Cric

Wagenkrik
Gato
Macaco

Cric
Подъемник
车辆升降机

1

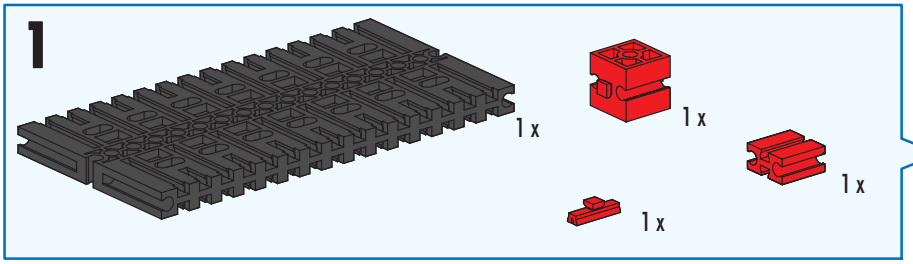

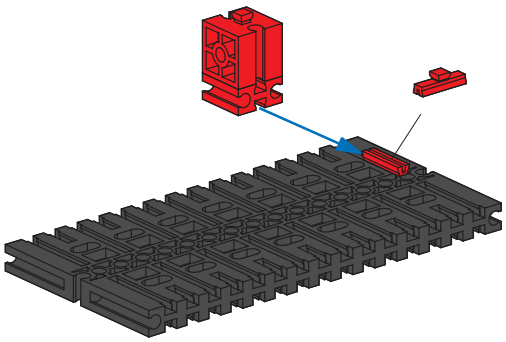

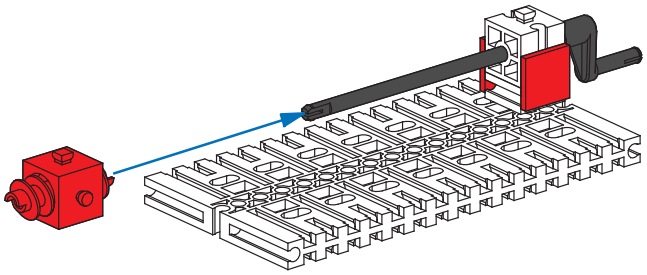

2

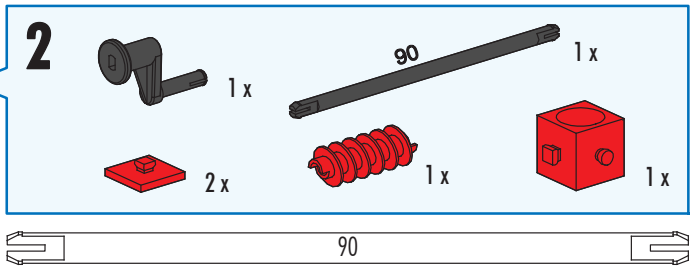

3

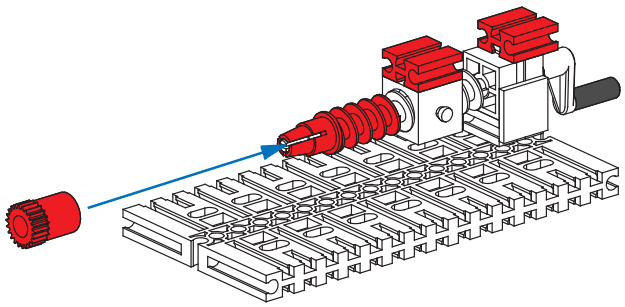

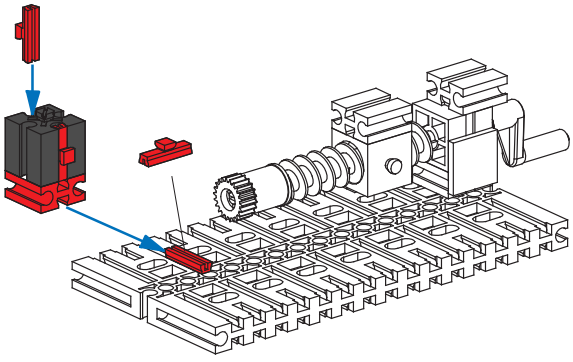

4

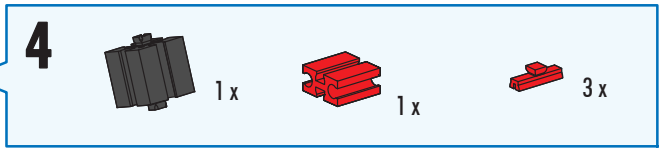

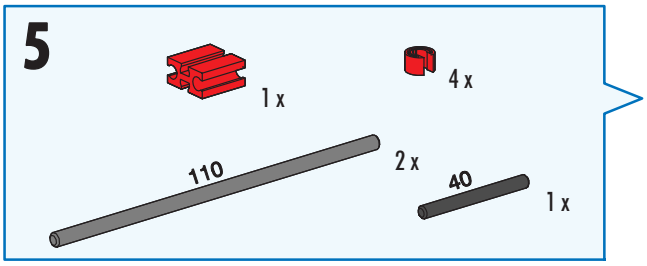

40

110

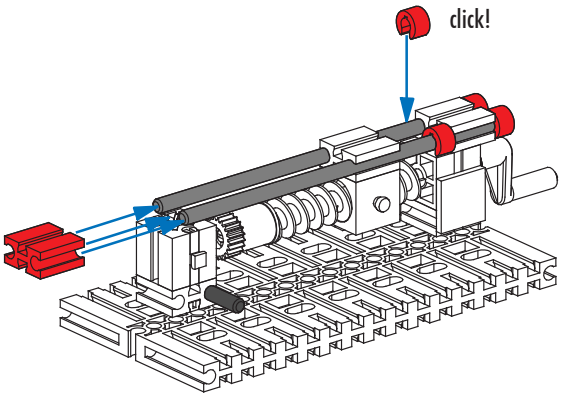

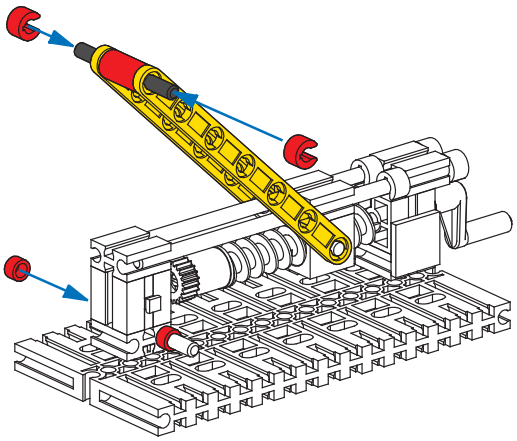

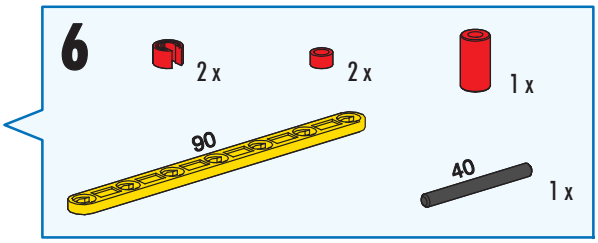

40

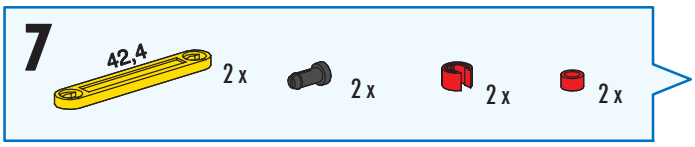

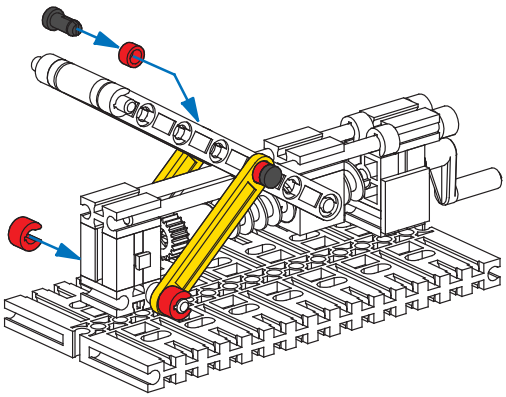

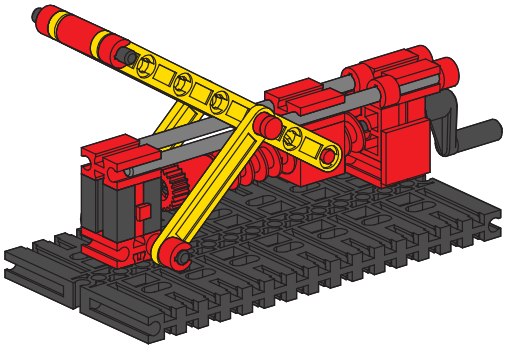

Scherenhubtisch
Scissor elevating platform
Plate-forme mobile à ciseaux
Schaarheftafel
Mesa elevadora de pantógrafo
Plataforma com mecanismo de pantógrafo
Piattaforma a pantografo
Ножничный подъемный стол
剪式升降台

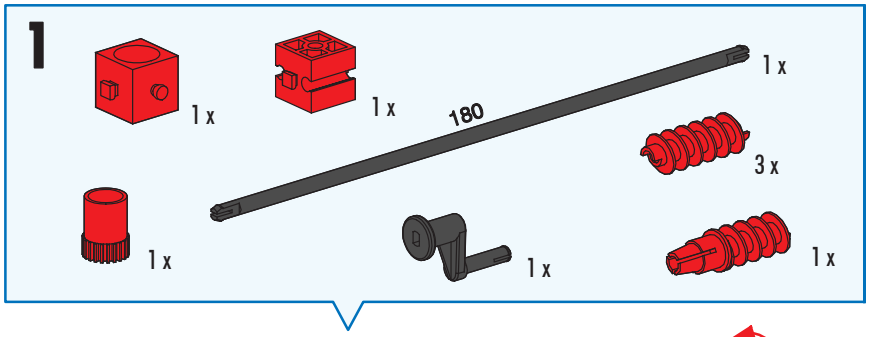

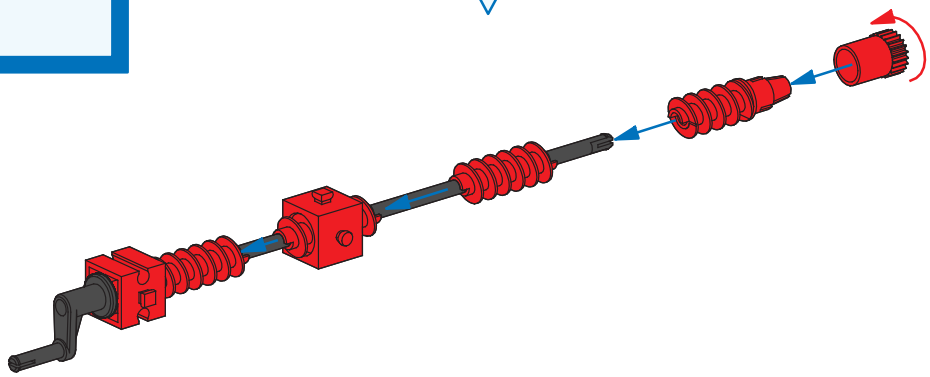

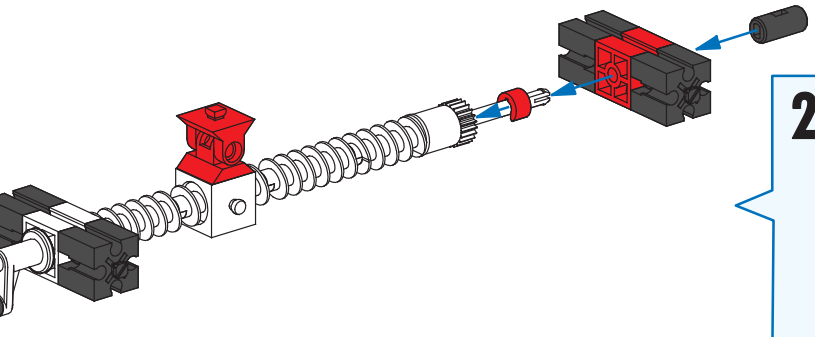

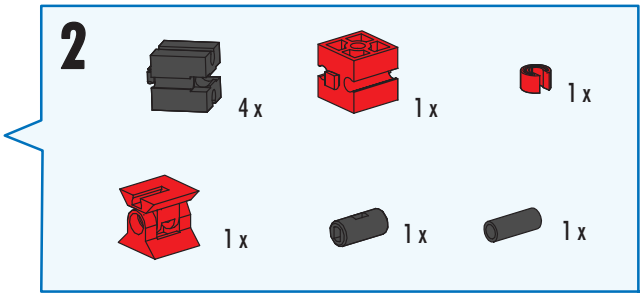

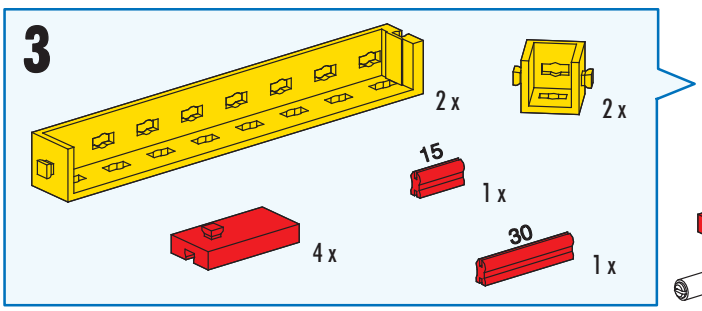

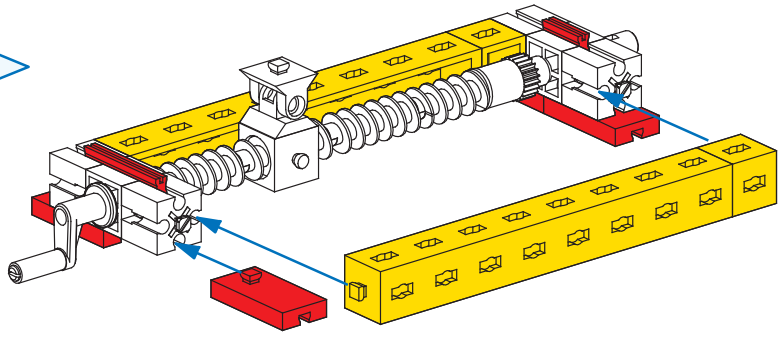

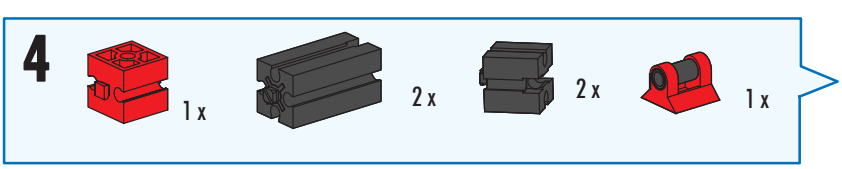
4
1 x
2 x
2 x
1 x

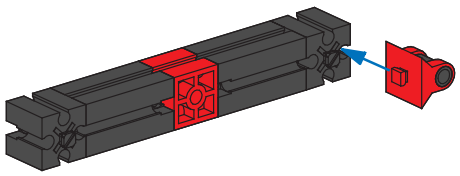

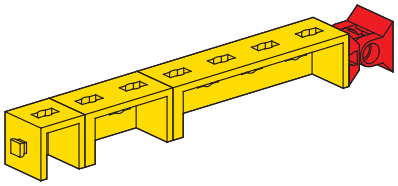

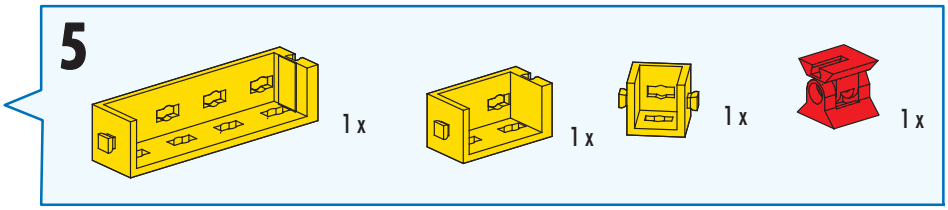
5
1 x
1 x
1 x
1 x

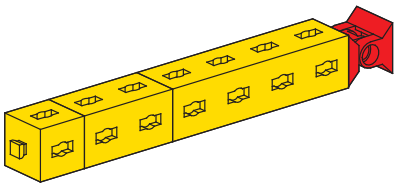

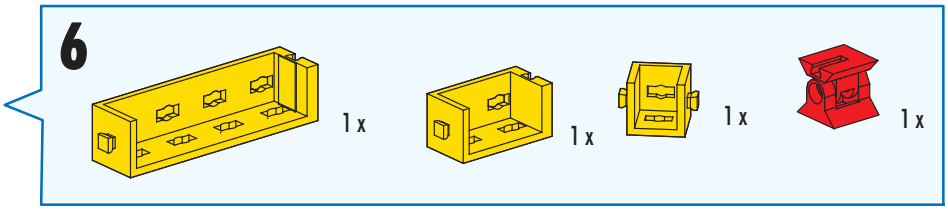
6
1 x
1 x
1 x
1 x

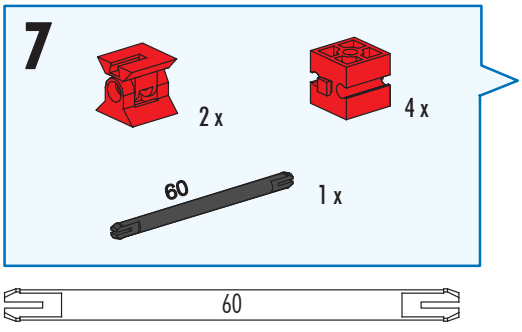
7
2 x
4 x
60
1 x
60

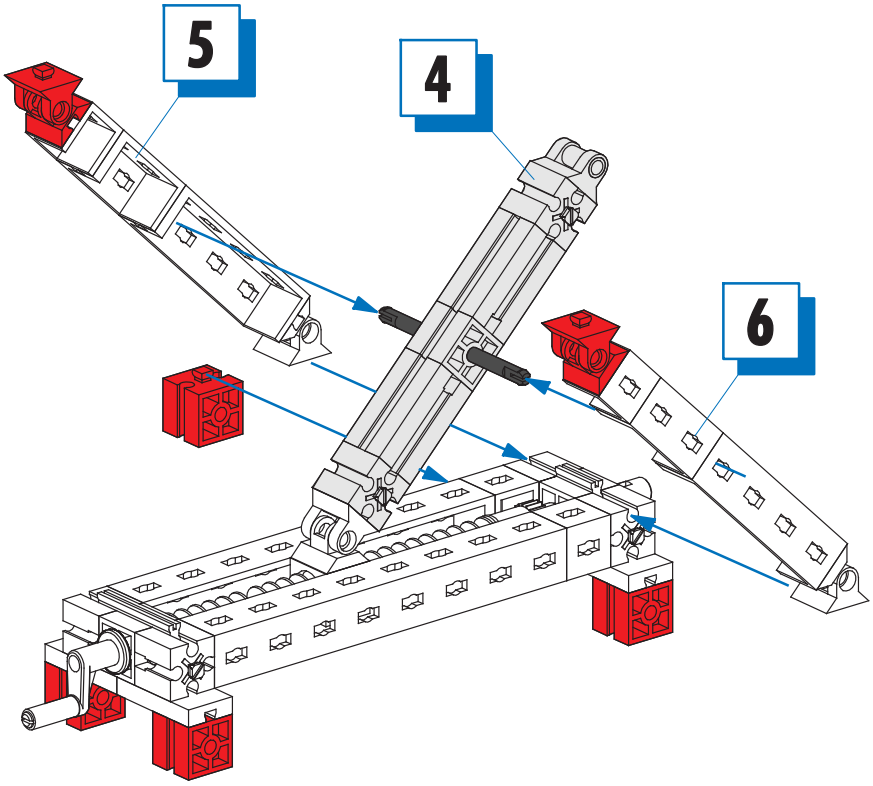
5
4
6

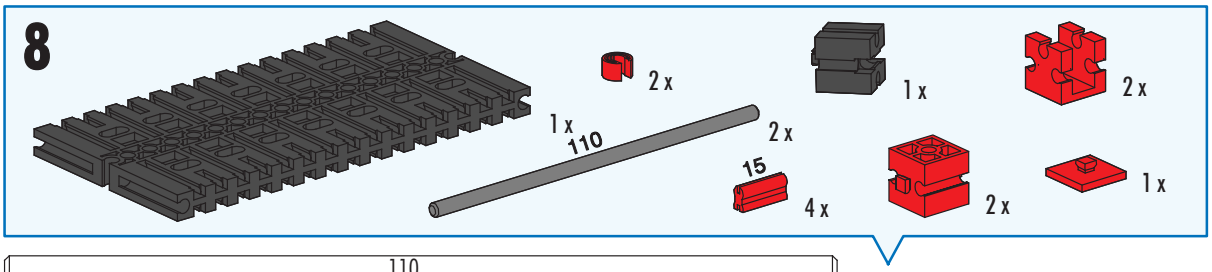
8
2 x
1 x
2 x
1 x
110
2 x
15
4 x
2 x
1 x

110

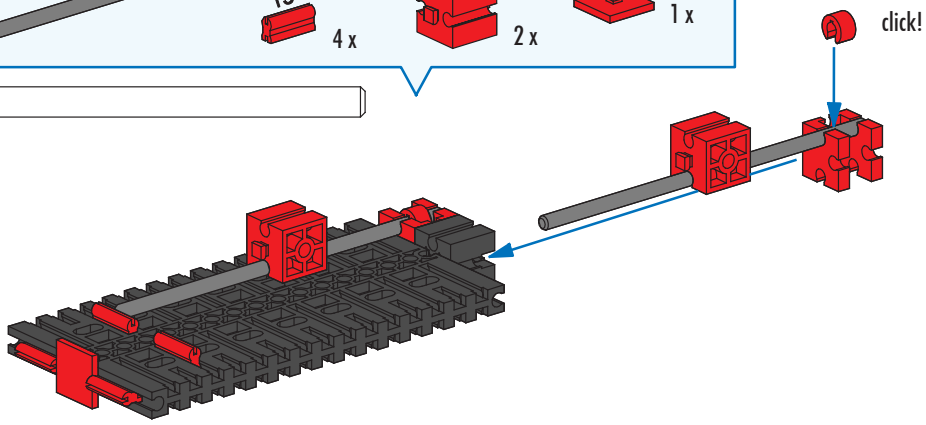
click!

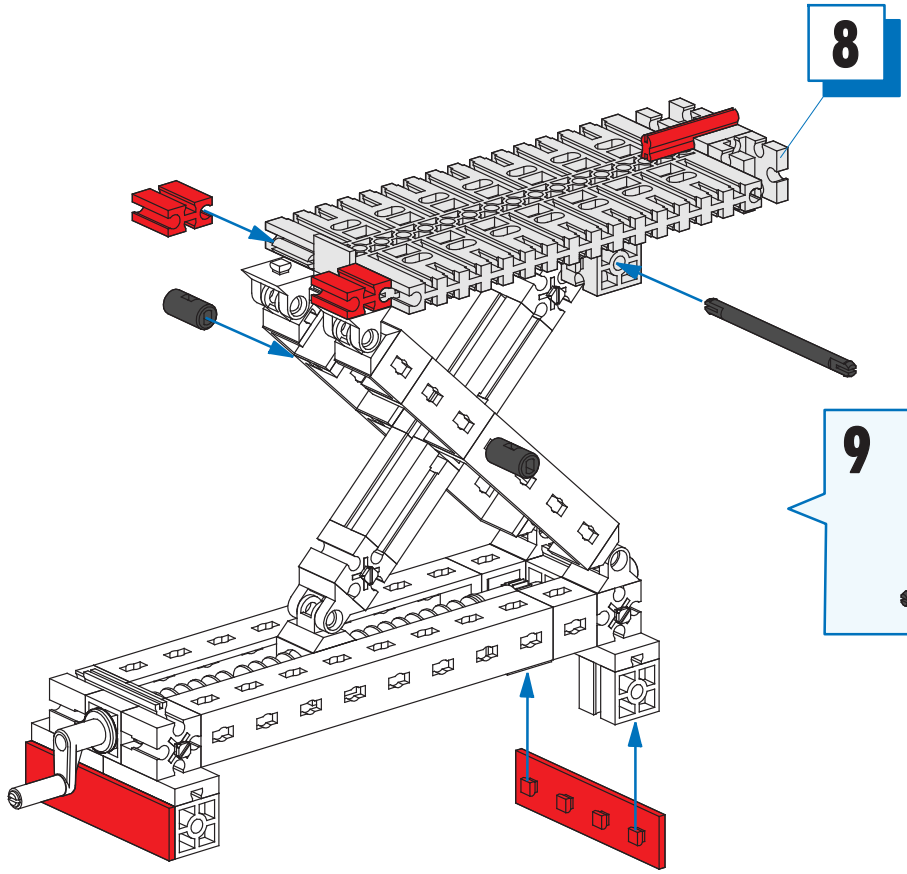
8

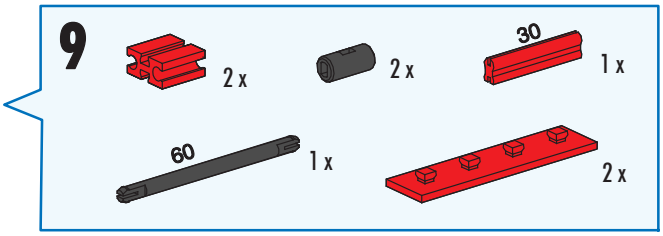
9
2 x
2 x
30
1 x
60
1 x
2 x

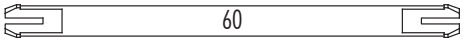
60

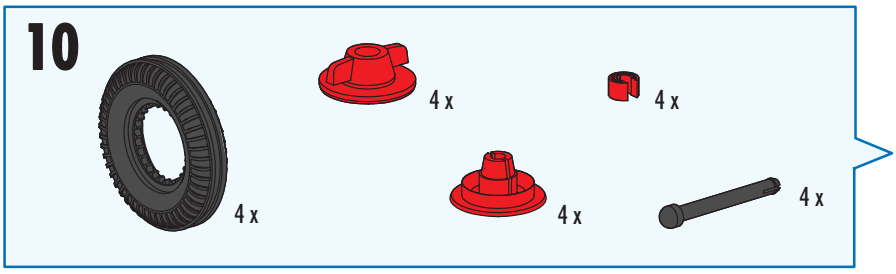
10
4 x
4 x
4 x
4 x
4 x

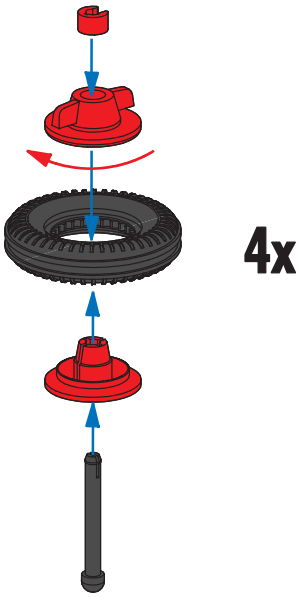
4x

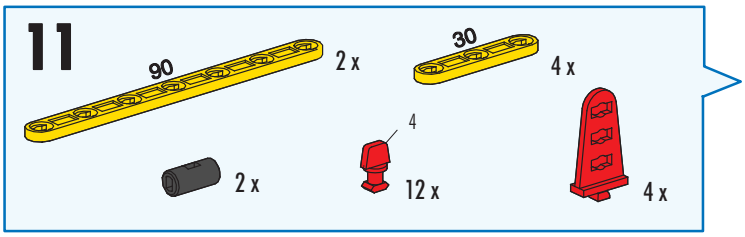
11
90
2 x
30
4 x
4
2 x
12 x
4 x

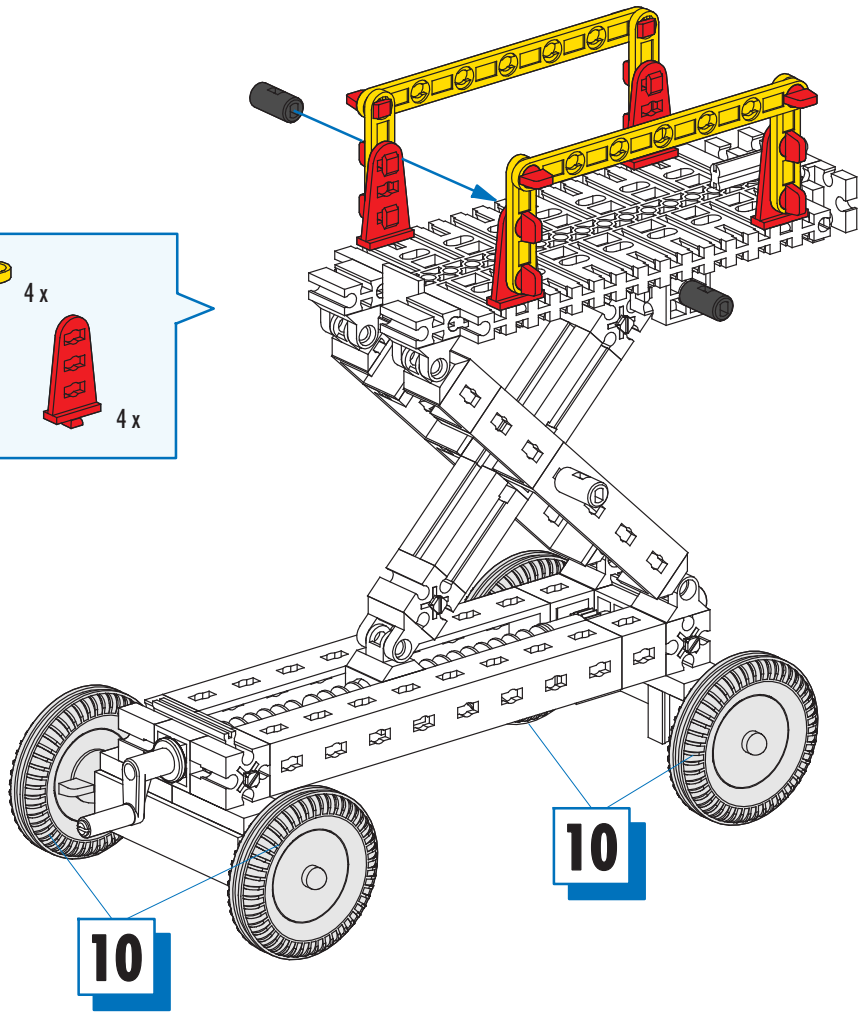
10
10

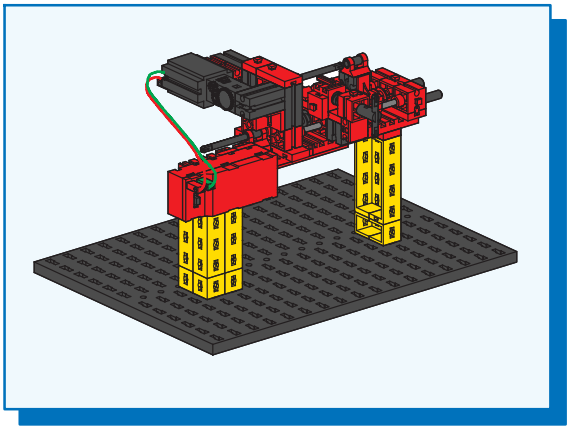

Drehmaschine
Lathe
Tour

Draaibank
Torno
Torno

Tornio
Токарный станок
车床

1

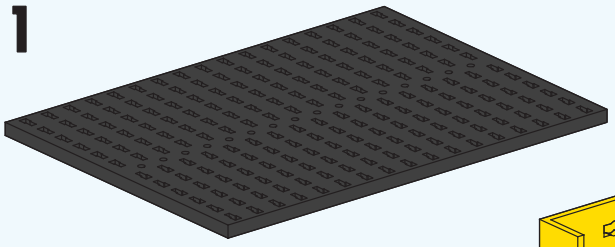

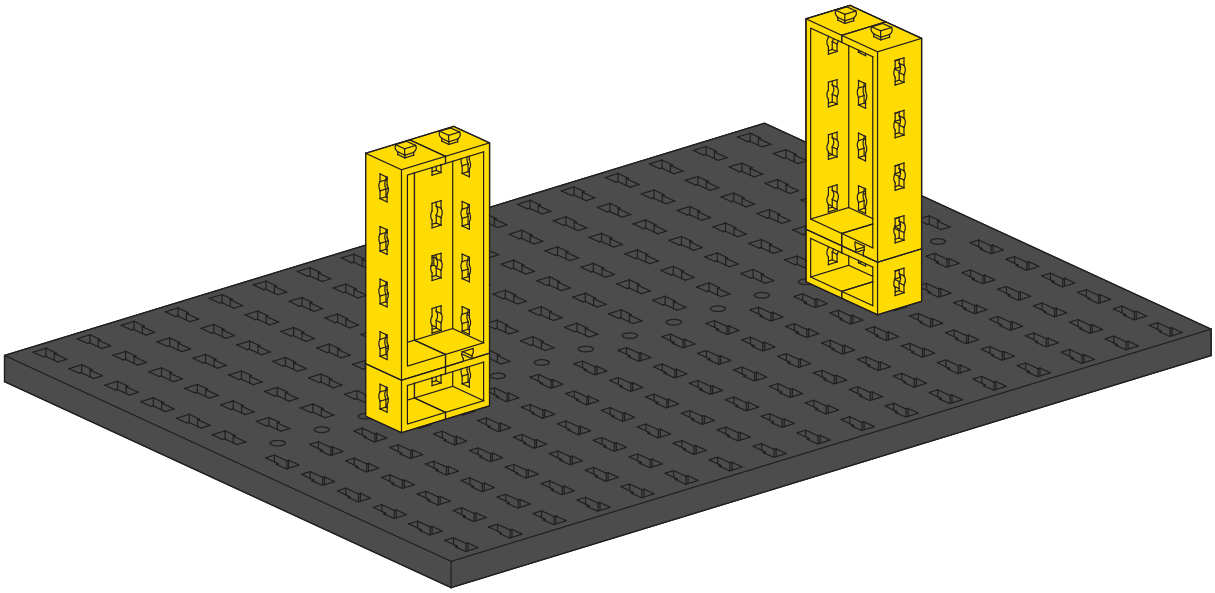

2

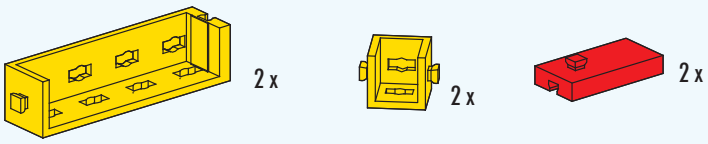

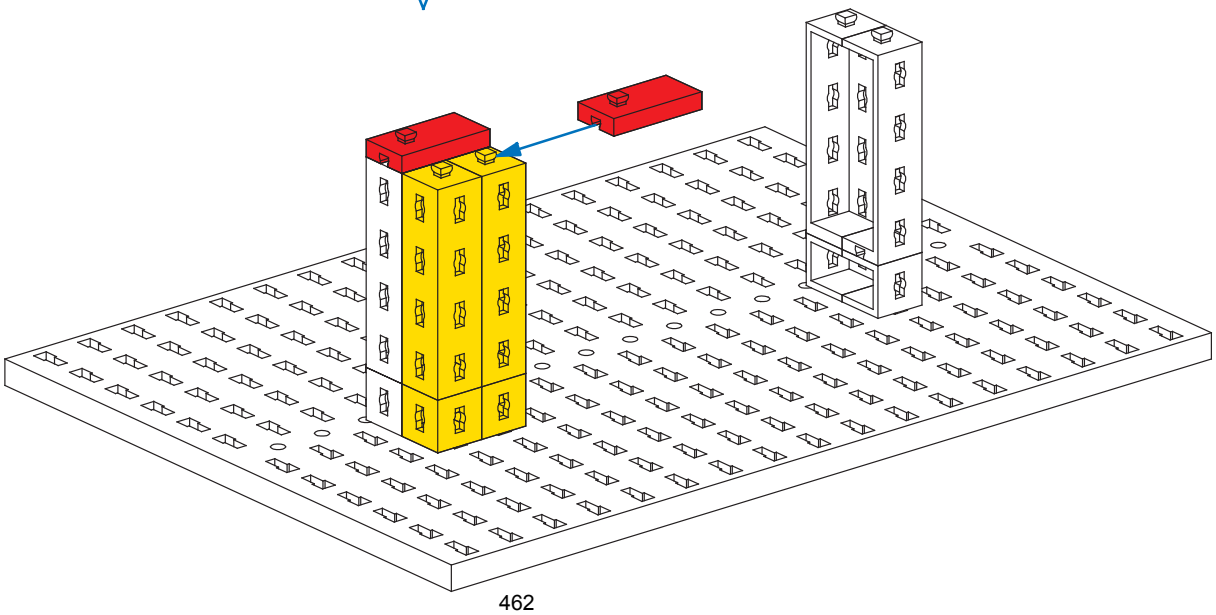

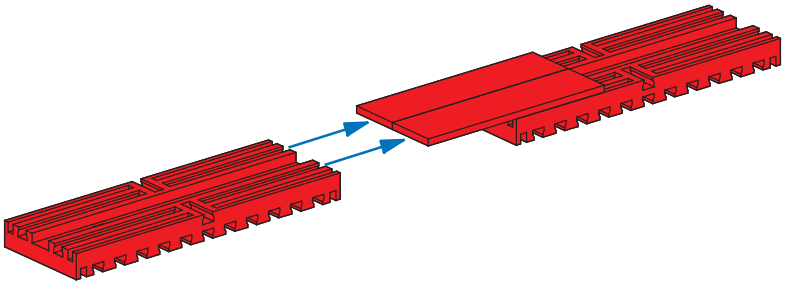

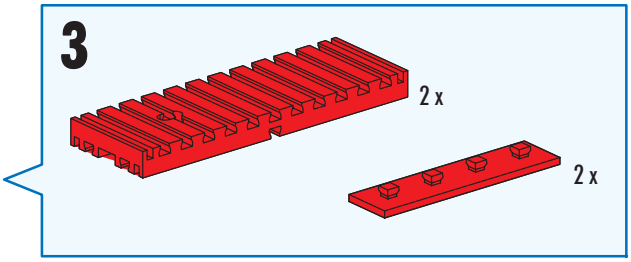
3
2 x
2 x

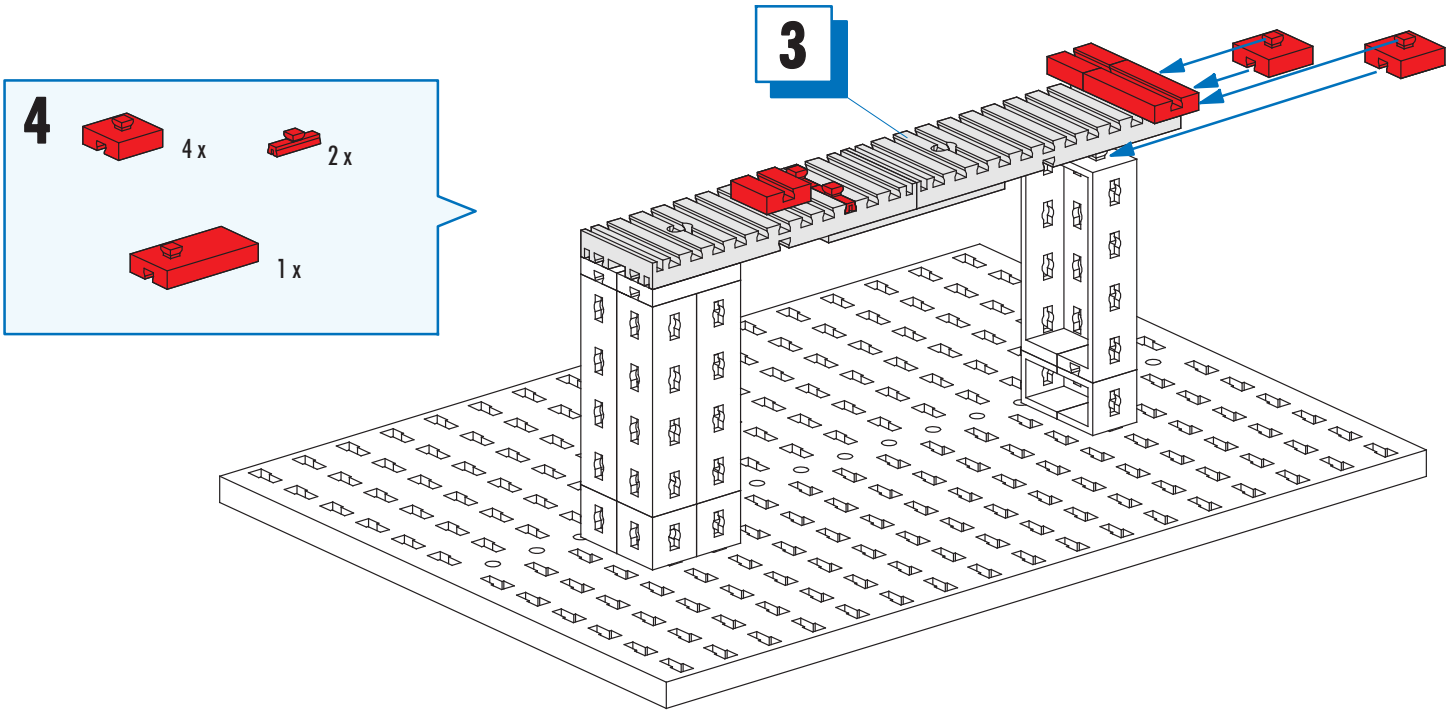
3
4
4 x
2 x
1 x

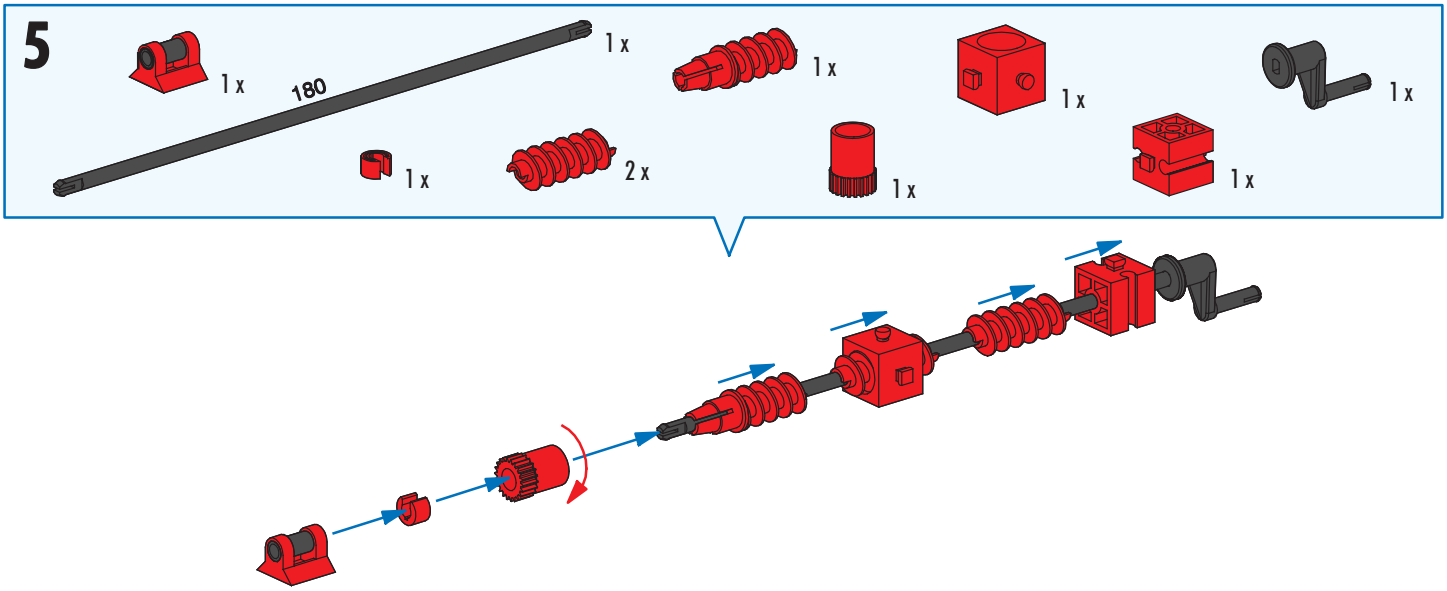
5
1 x
180
1 x
1 x
1 x
1 x
1 x
2 x
1 x
1 x

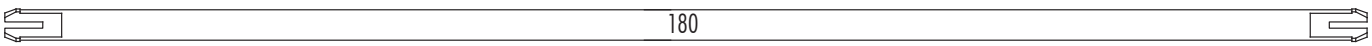
180

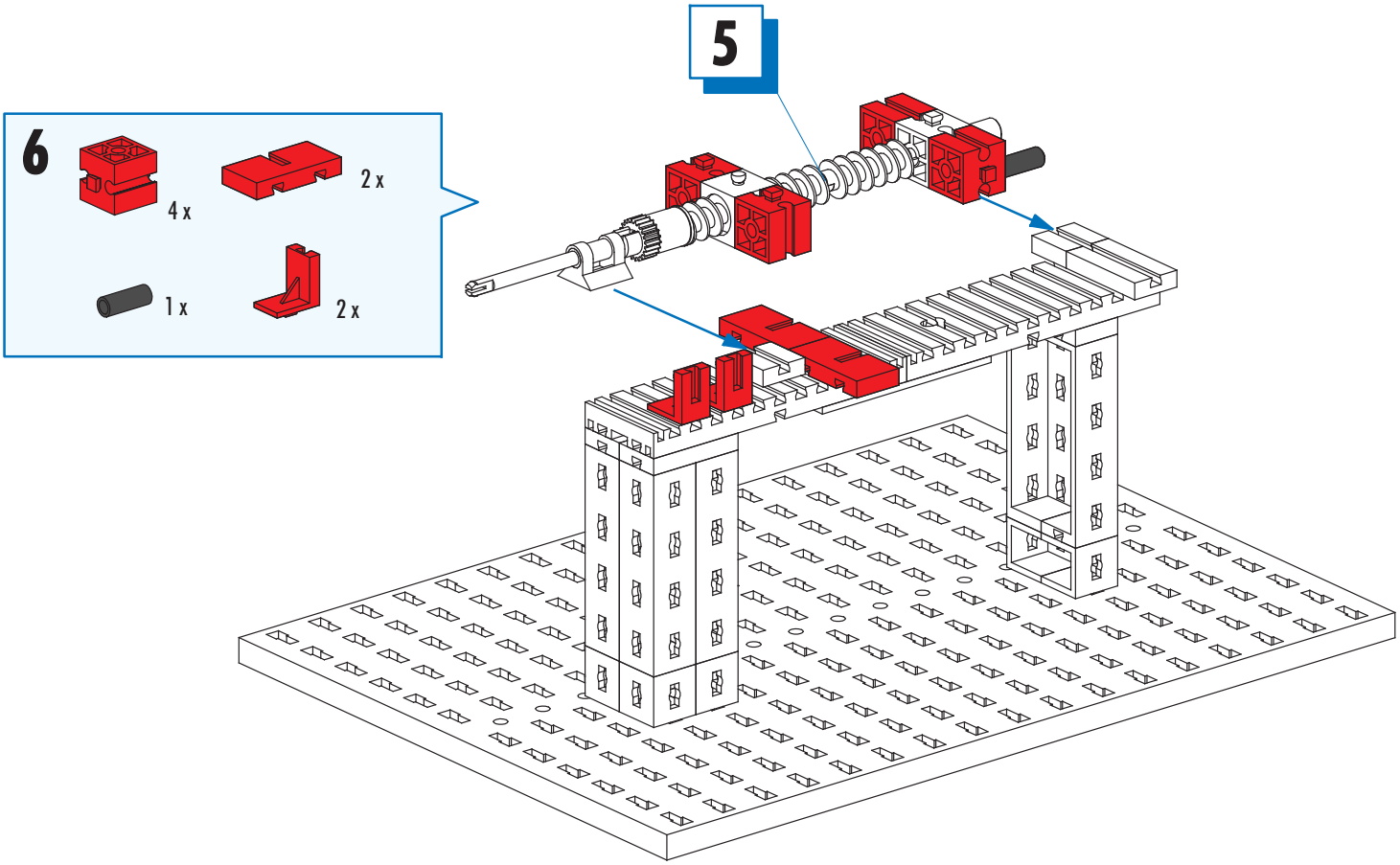
5
6
4 x
2 x
1 x
2 x

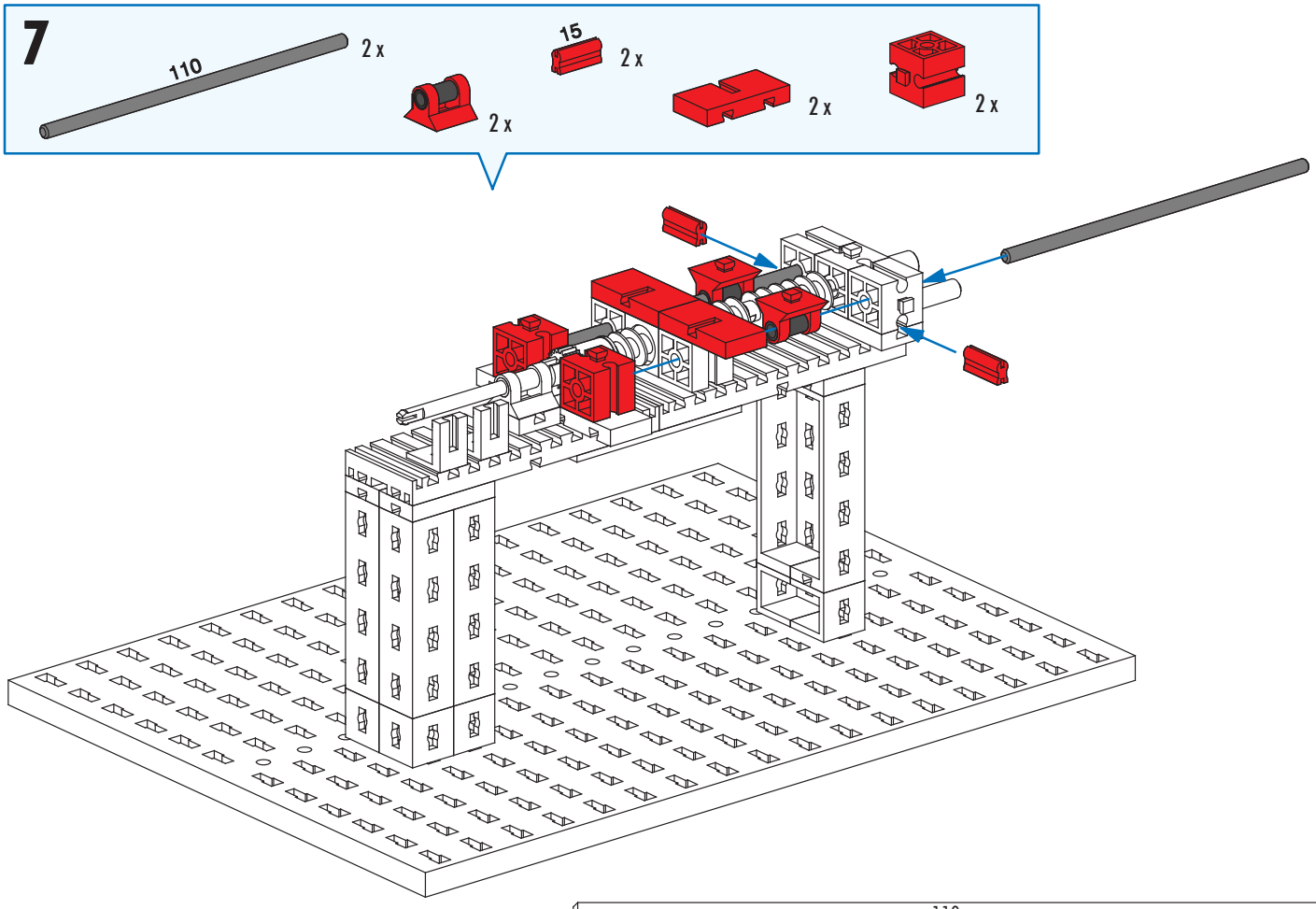
7
110
2 x
2 x
15
2 x
2 x
2 x

8

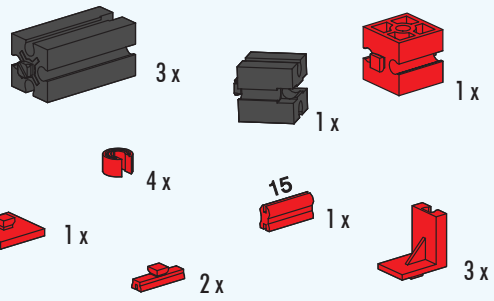
3 x
1 x
1 x
4 x
15
1 x
1 x
2 x
3 x

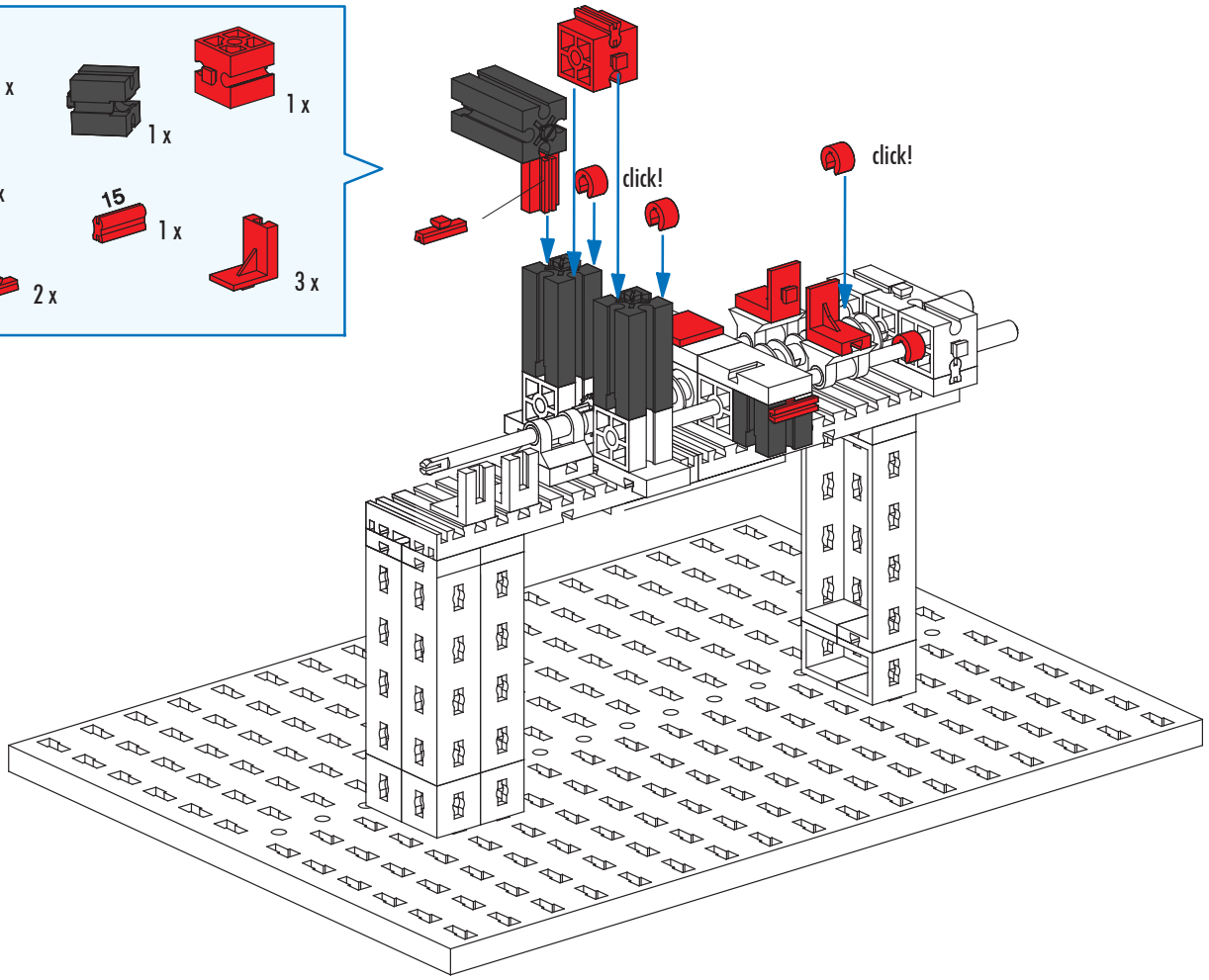
click!
click!

9

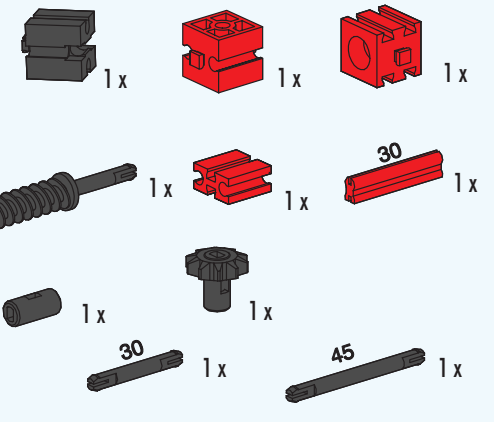
1 x
1 x
1 x
1 x
1 x
30
1 x
1 x
1 x
30
1 x
45
1 x

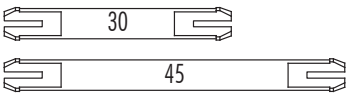
30
45

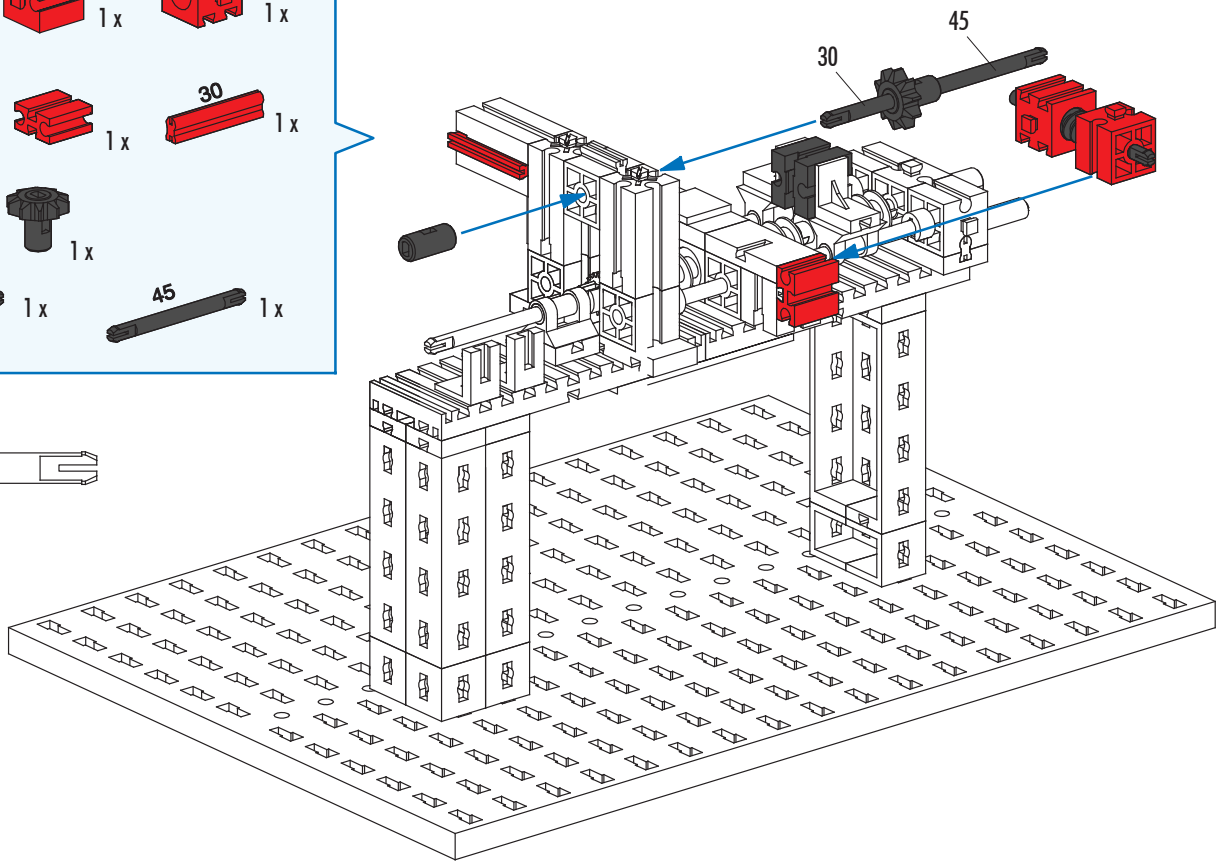
45
30

465

10

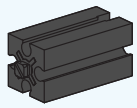
1 x

1 x

1 x

3 x

2 x

1 x

1 x

2 x

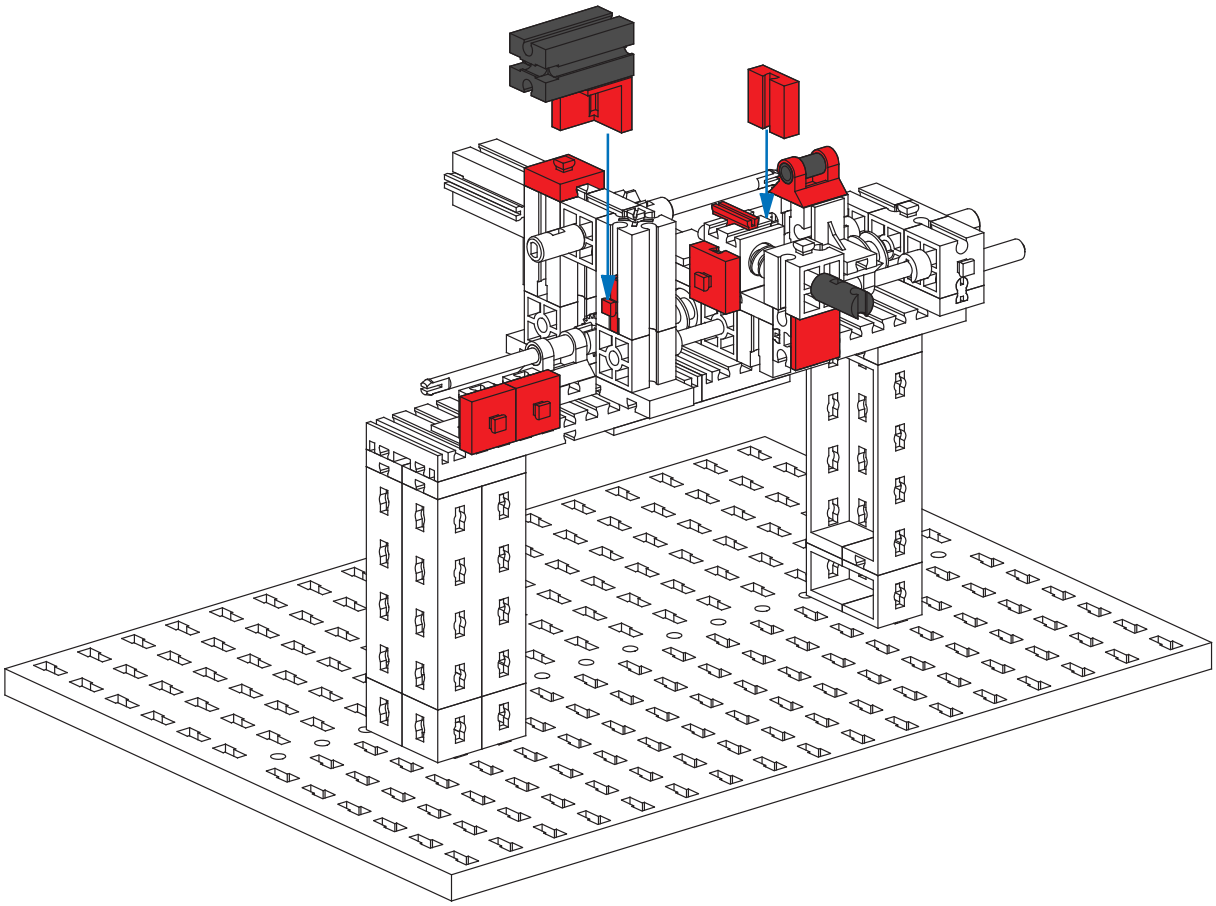

11

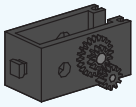
1 x

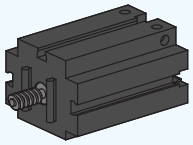
1 x

2 x

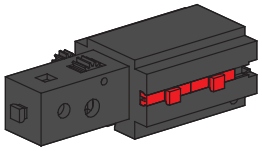

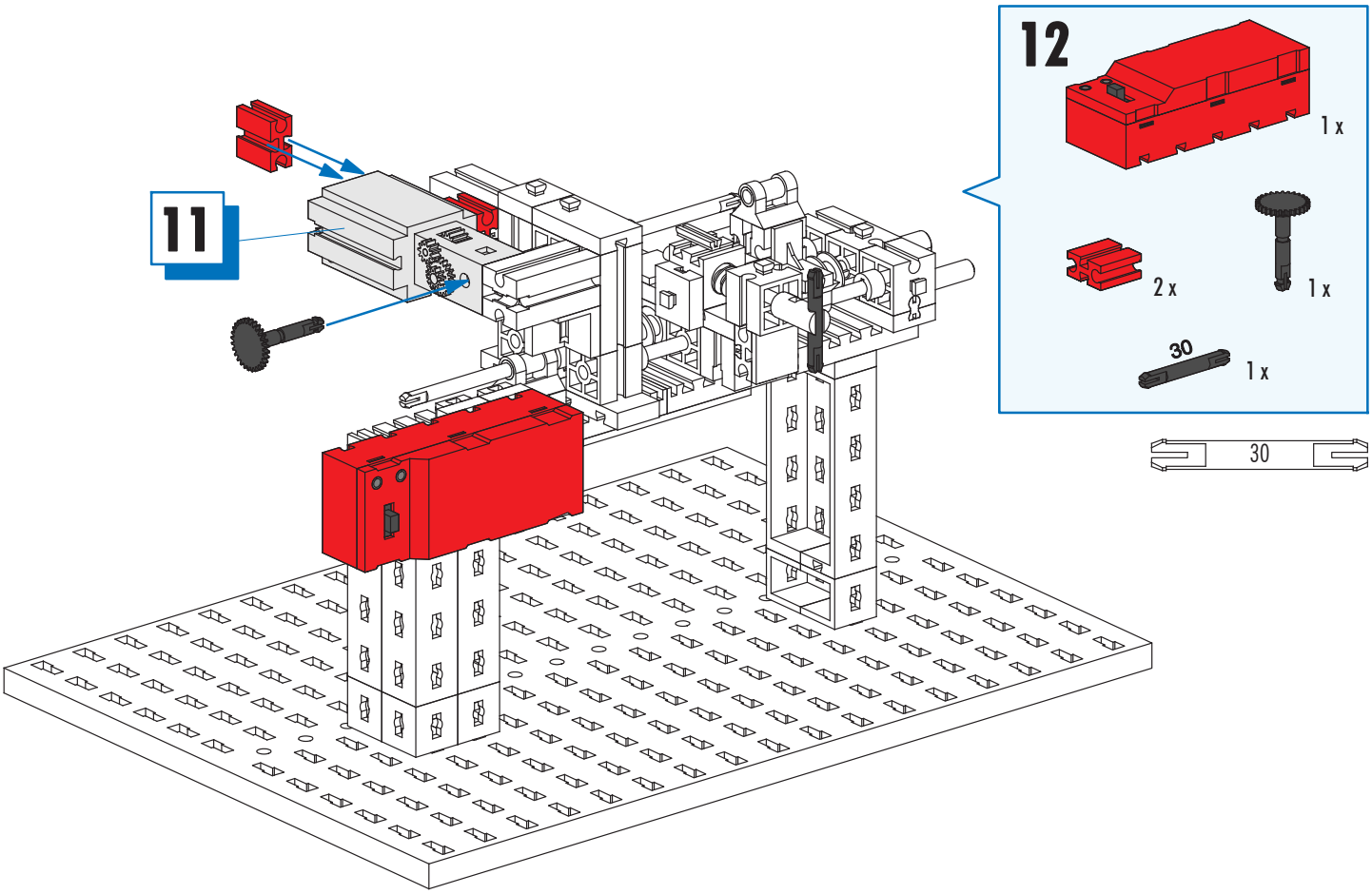
11
12
1 x
2 x
1 x
30
1 x
30

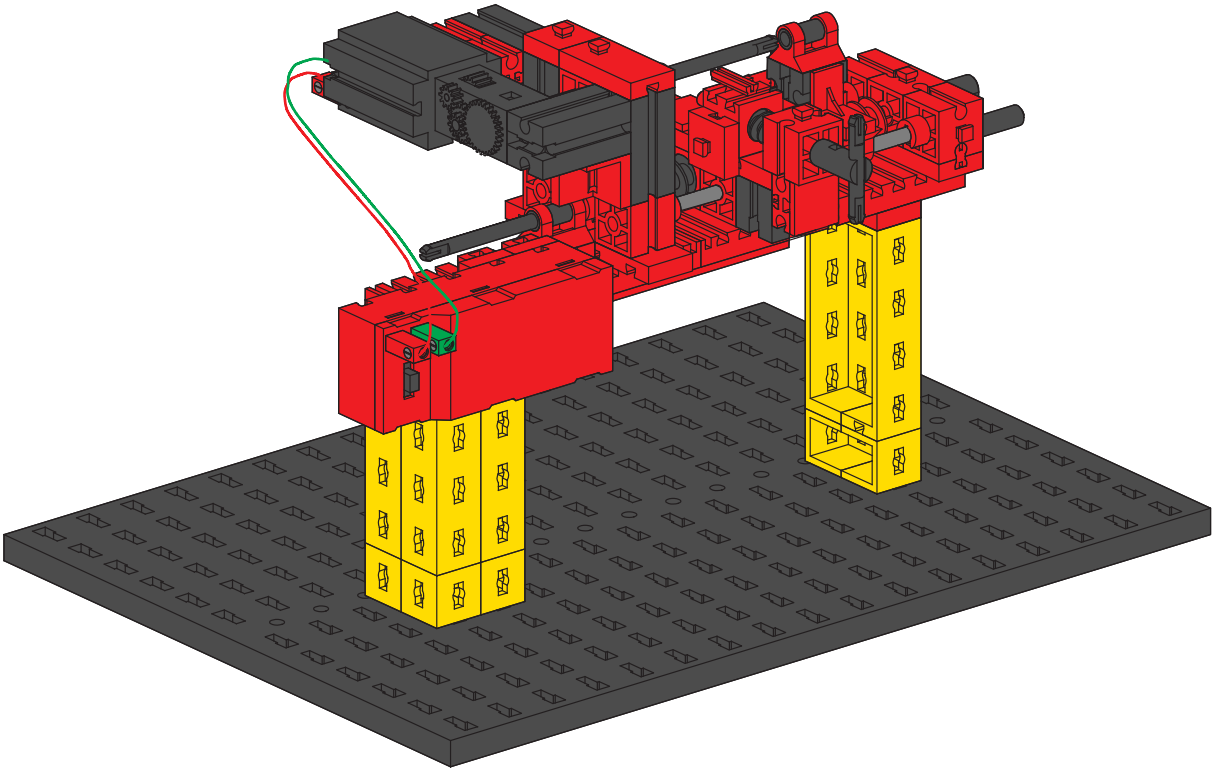

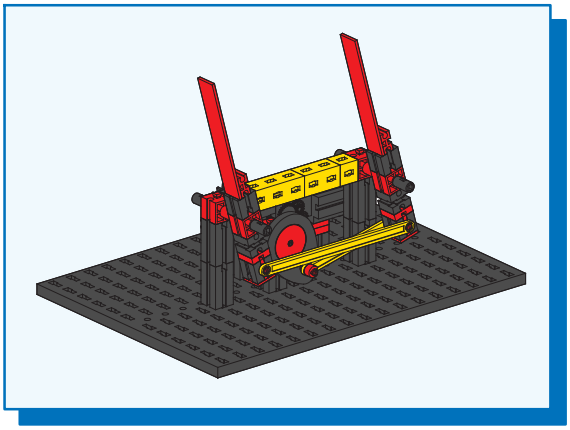

Scheibenwischer
Windshield wiper
Essuie-glace

Ruitenwisser
Limpiaparabrisas
Para-brisas

Tergicristallo
Стеклоочистители
刮雨器

1

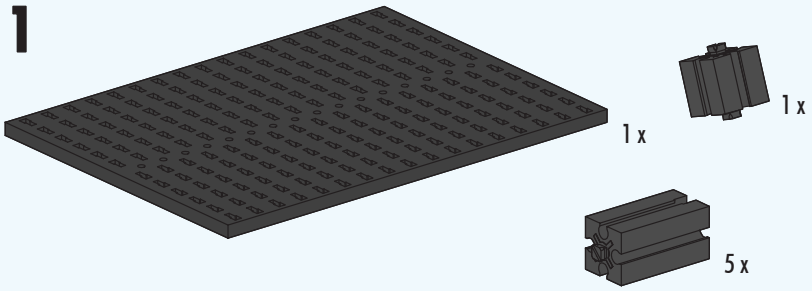

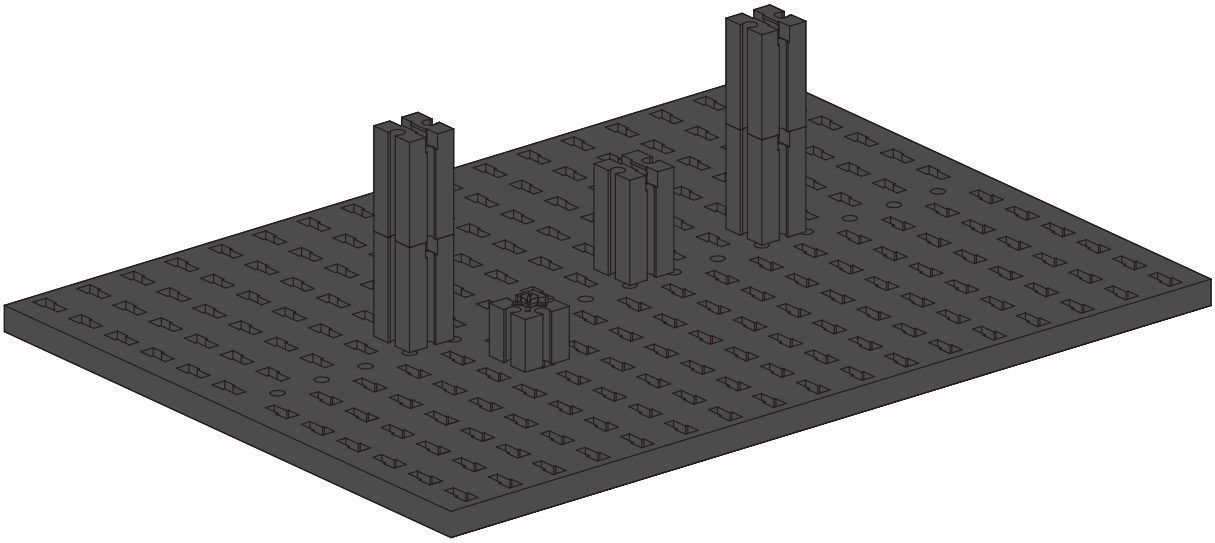

2

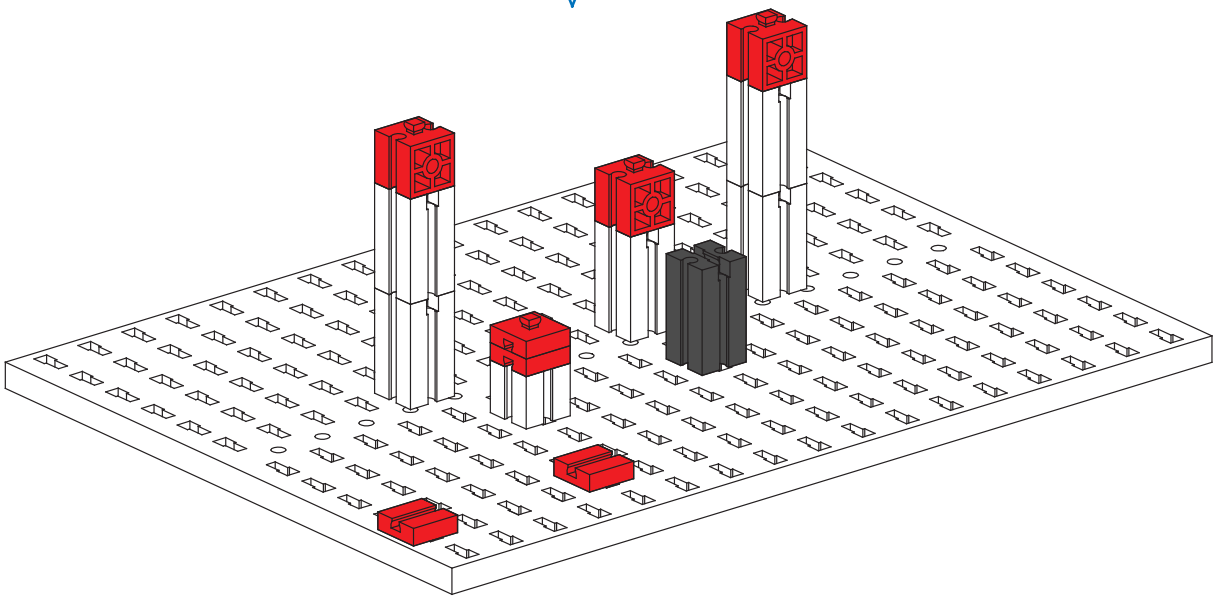

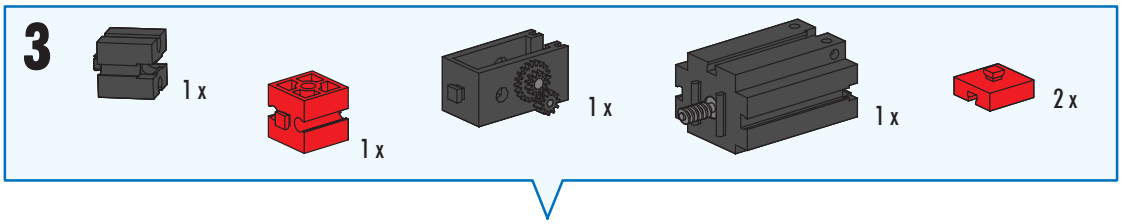
3
1 x
1 x
1 x
1 x
2 x

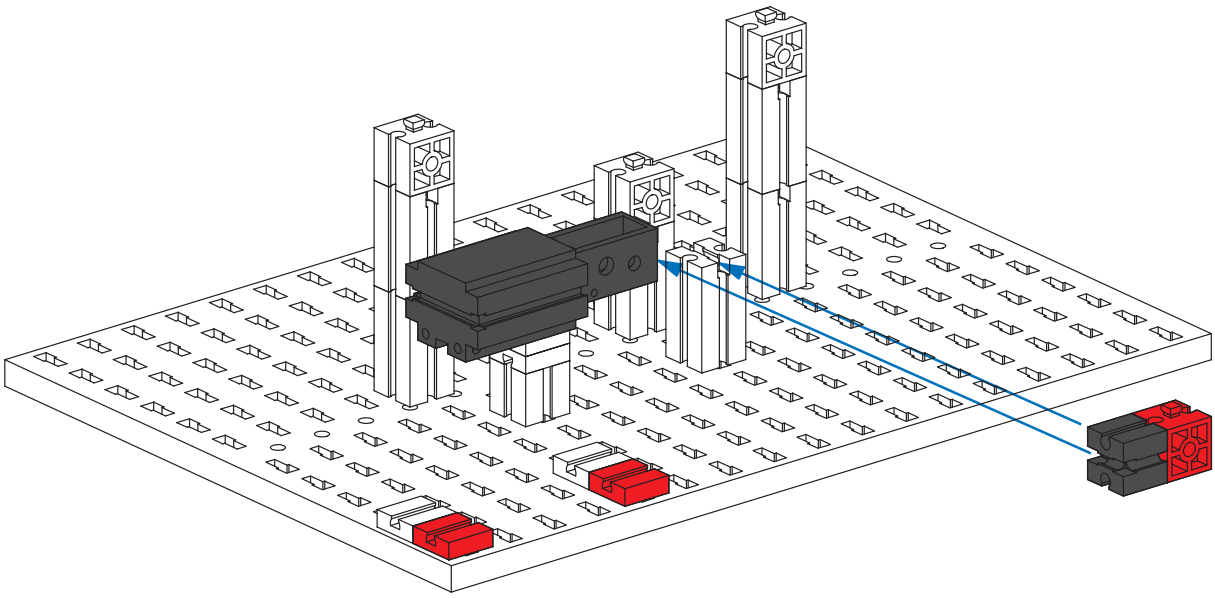

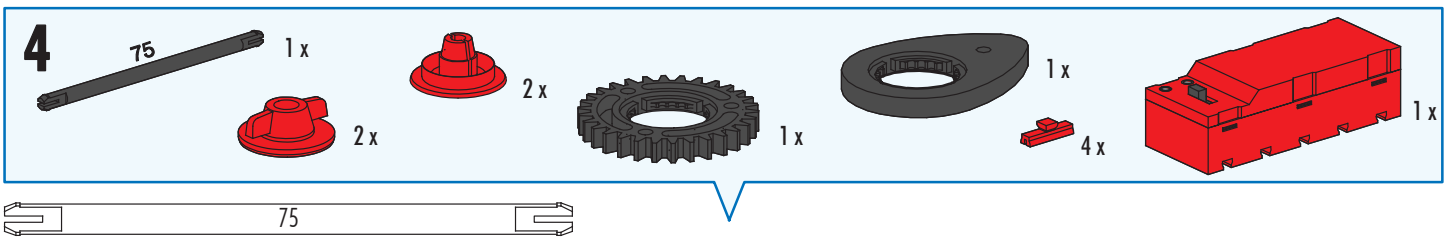
4
75
1 x
2 x
2 x
1 x
1 x
4 x
1 x

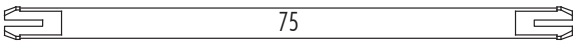
75

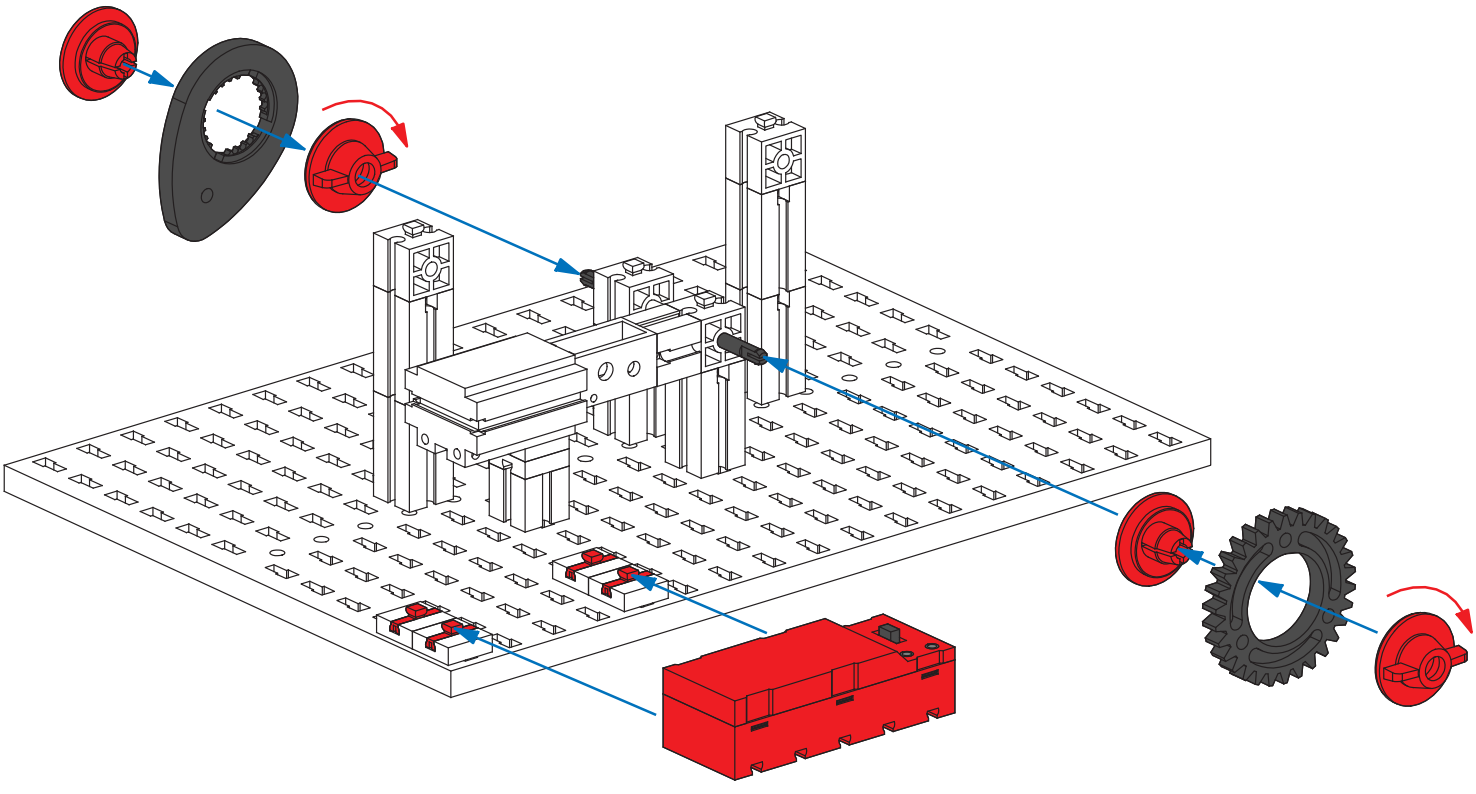

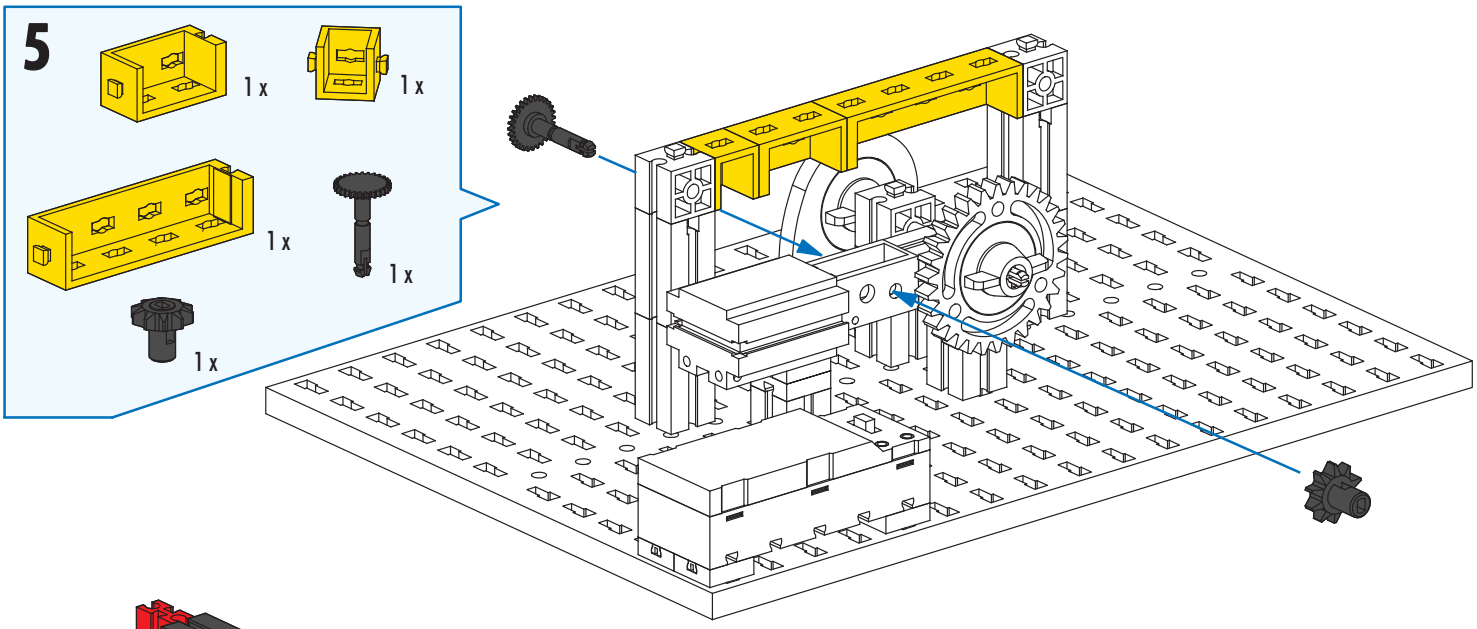
5
1 x
1 x
1 x
1 x
1 x

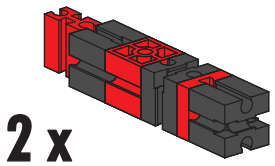
2 x

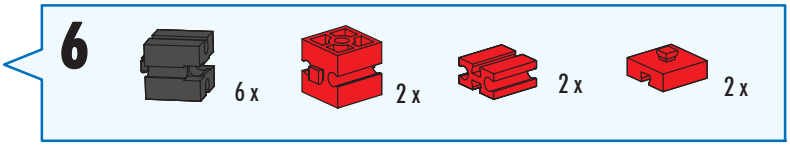
6
6 x
2 x
2 x
2 x

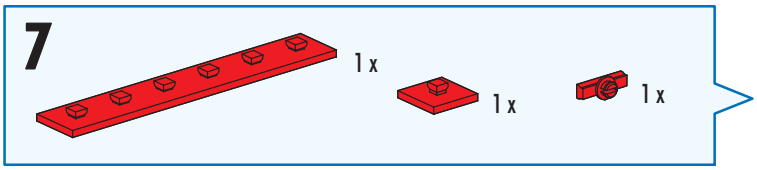
7
1 x
1 x
1 x

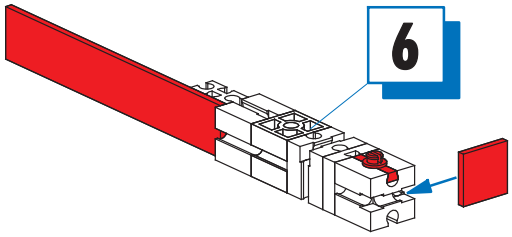
6

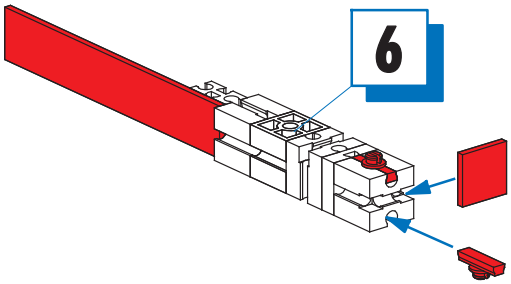
6

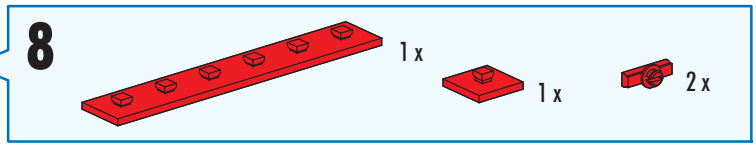
8
1 x
1 x
2 x

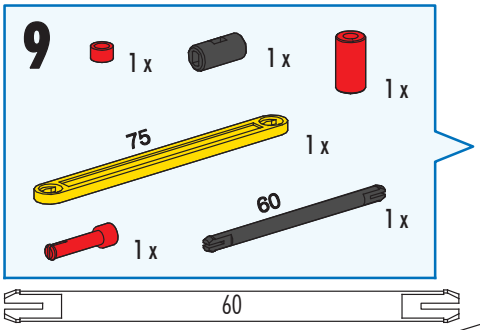
9
1 x
1 x
1 x
75
1 x
60
1 x
1 x

60

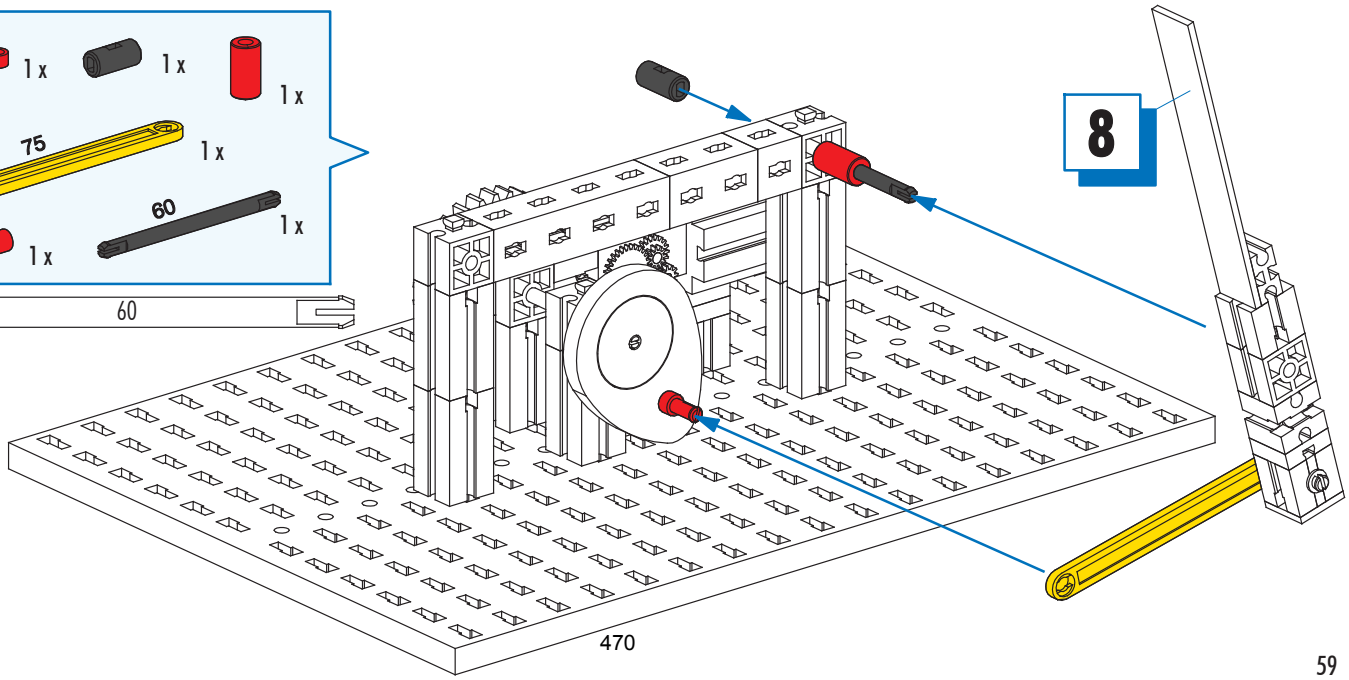
8
470

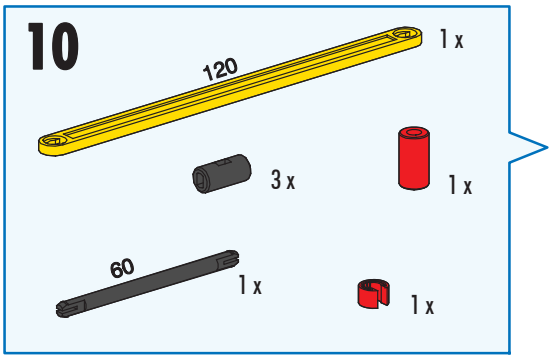
10
120
1 x
3 x
1 x
60
1 x
1 x

60

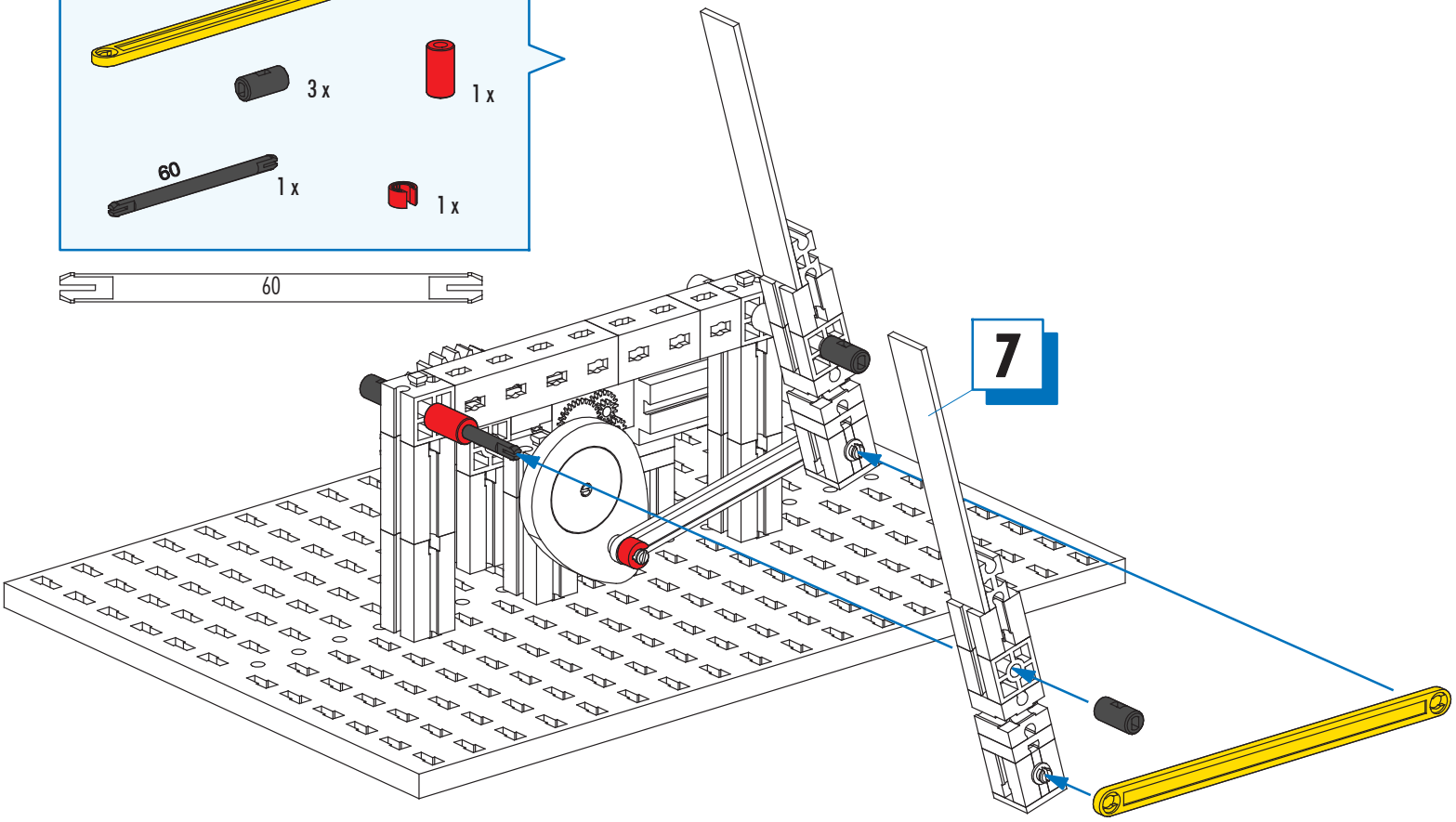
7

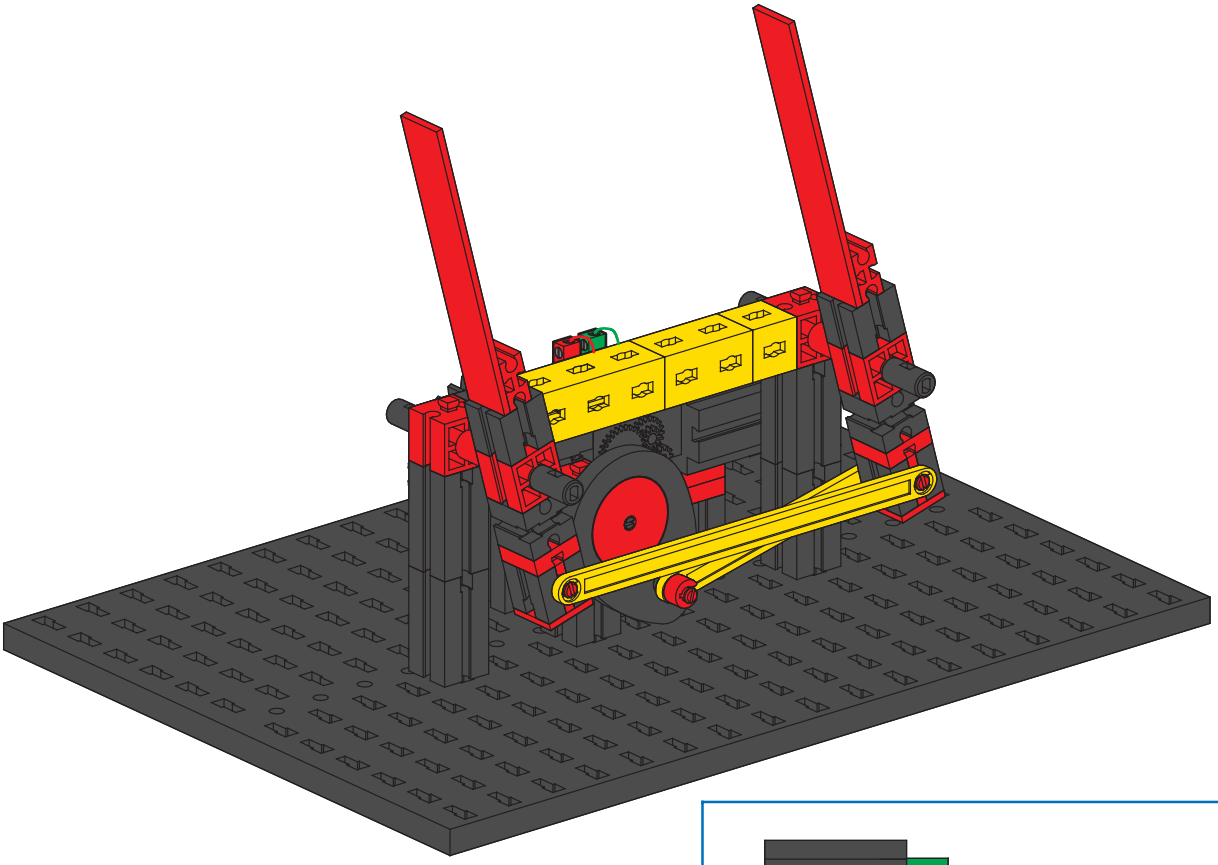

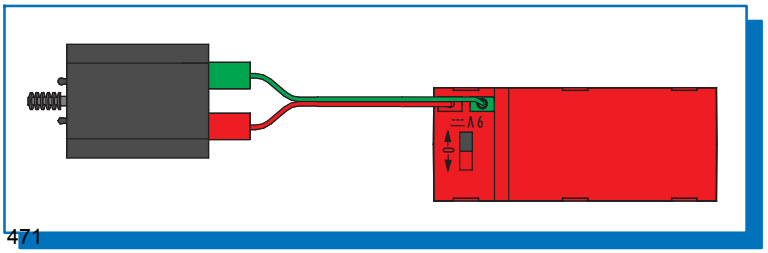

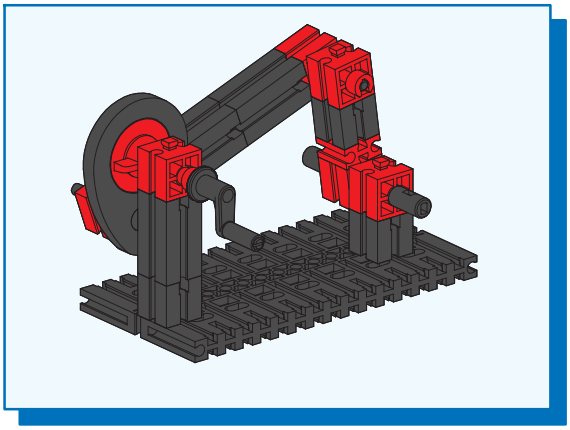

Viergelenkkette
Four-bar chain
Chaîne cinématique à quatre joints articulés

Vierscharniersmechanisme
Mecanismo de cuatro articulaciones
Corrente de quatro articulações

Catena a quattro articolazioni
Четырехзвенный шарнирный механизм
四活节链

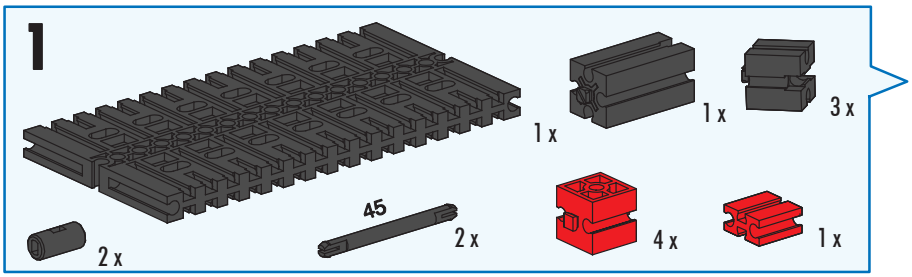

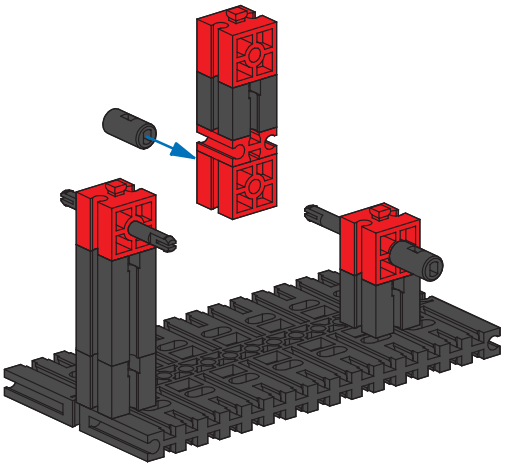

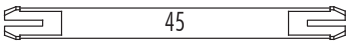

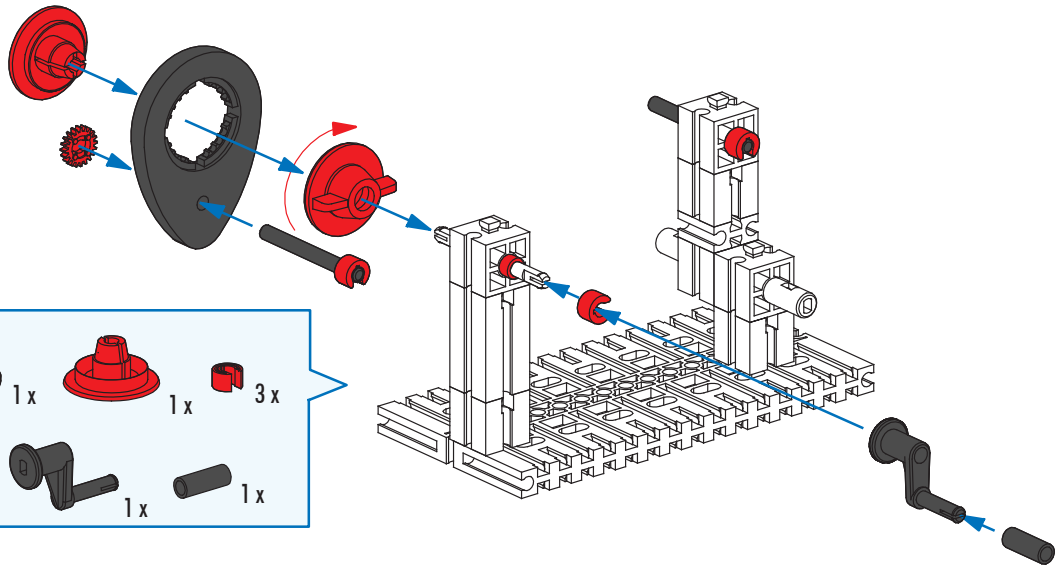

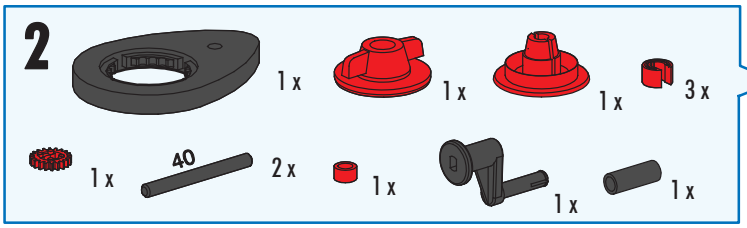

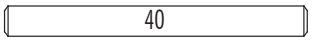

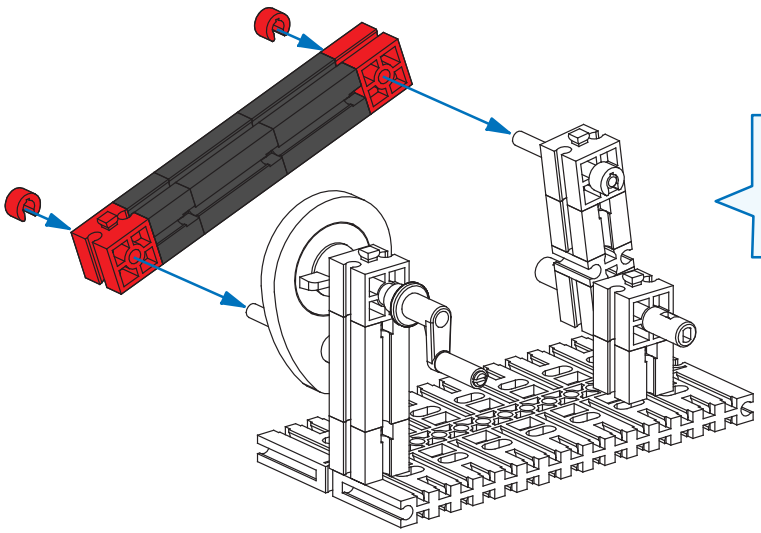

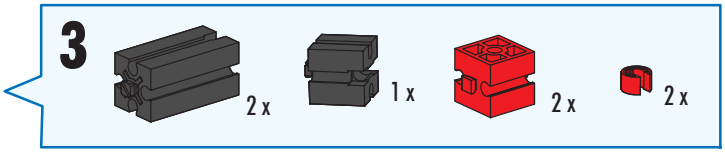

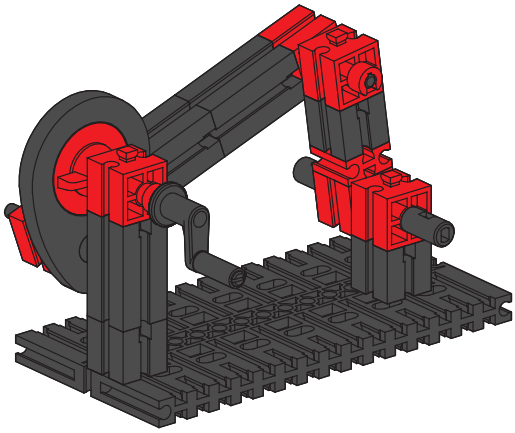

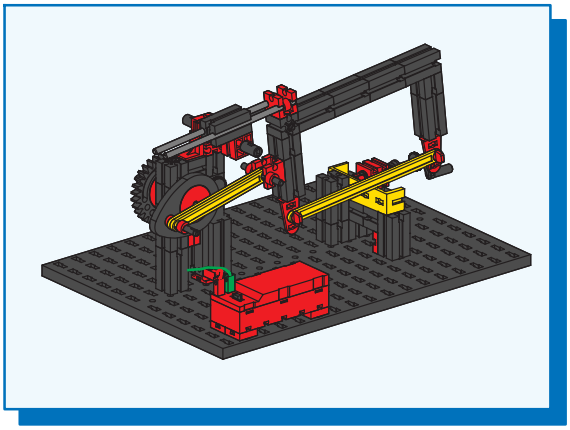

Bügelsäge
Power hacksaw machine
Scie à archet

Beugelzaag
Sierra de arco
Serra de arco

Seghetto ad arco
Ножовка
弓锯

1

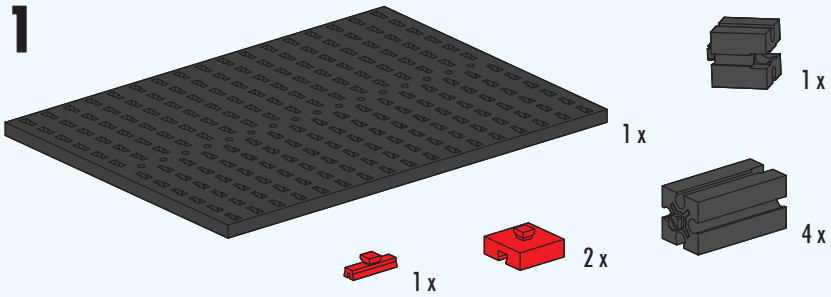

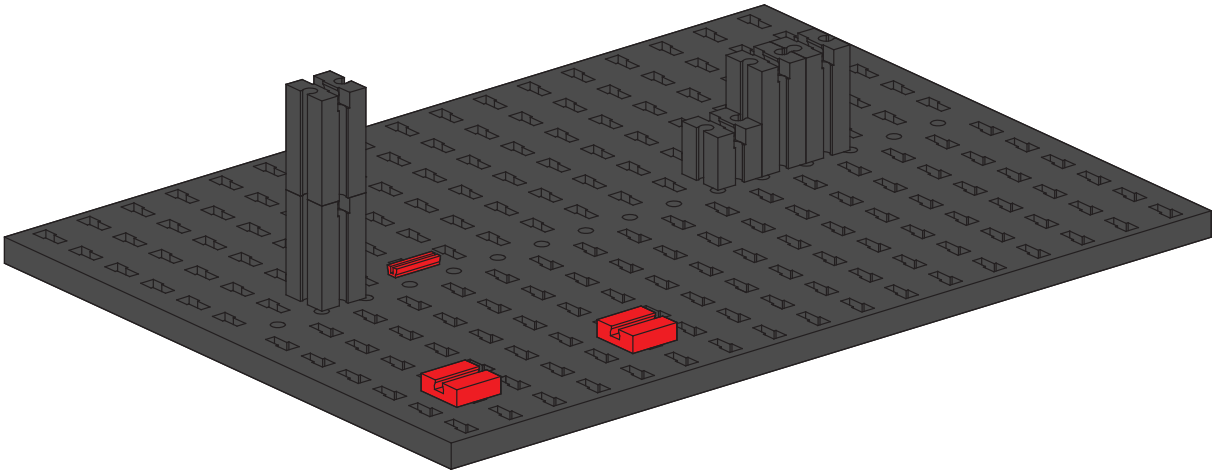

2

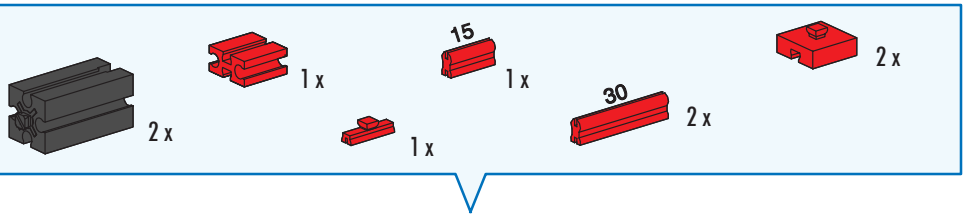

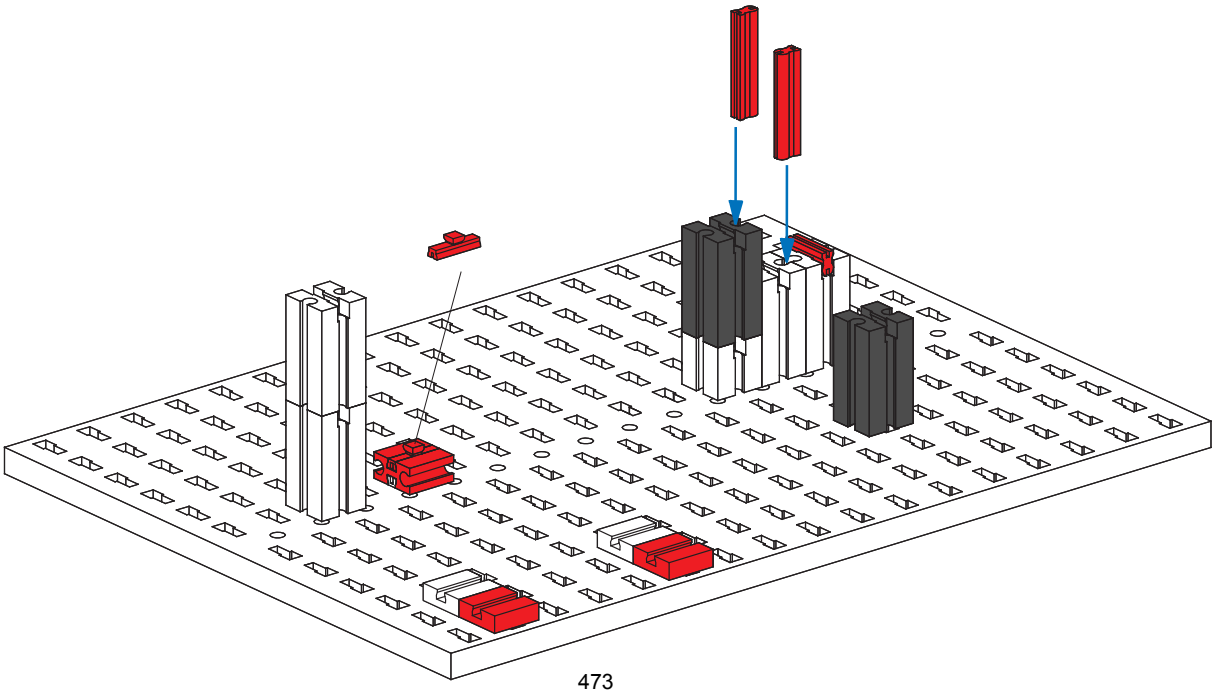

473

3

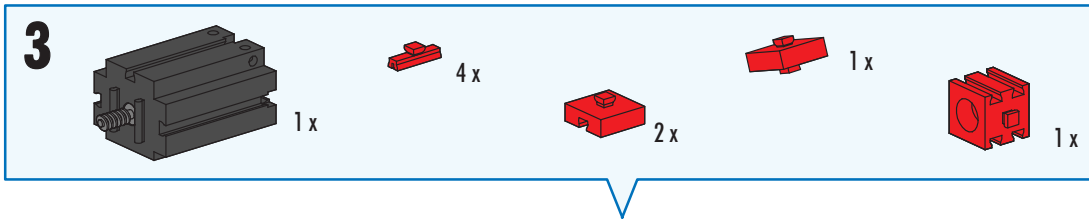

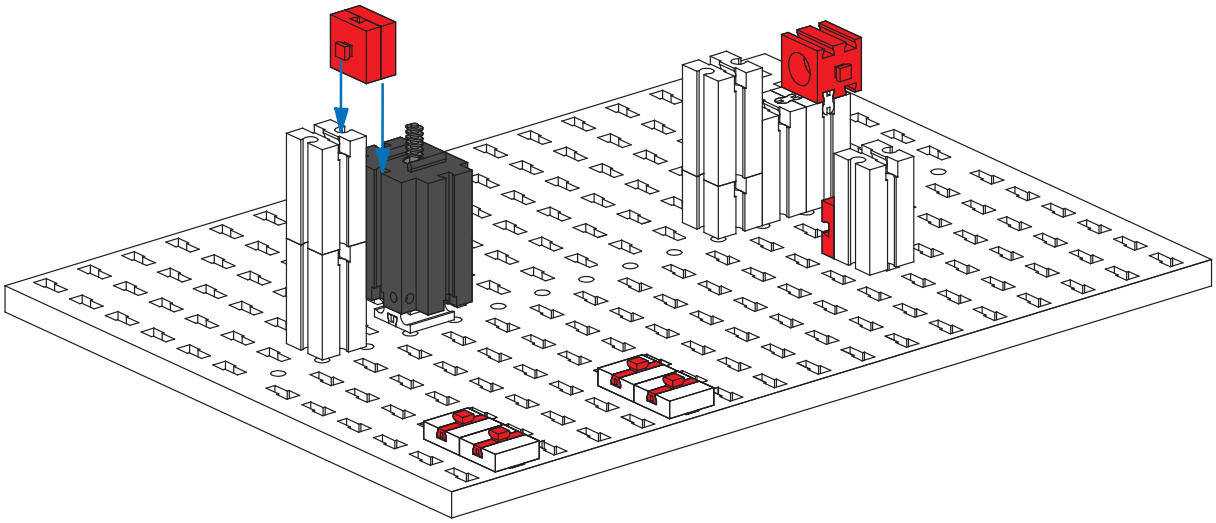

4

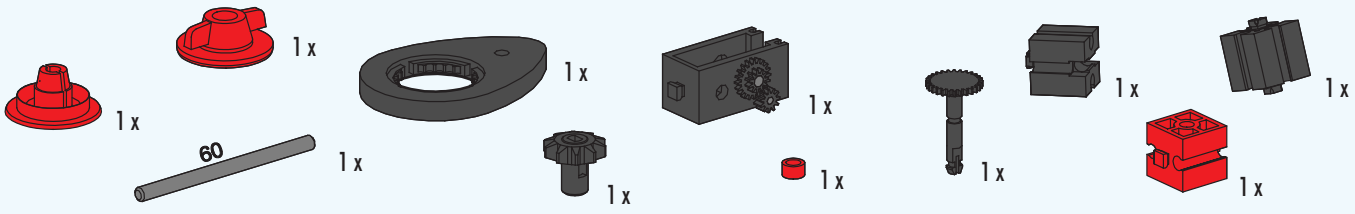

60

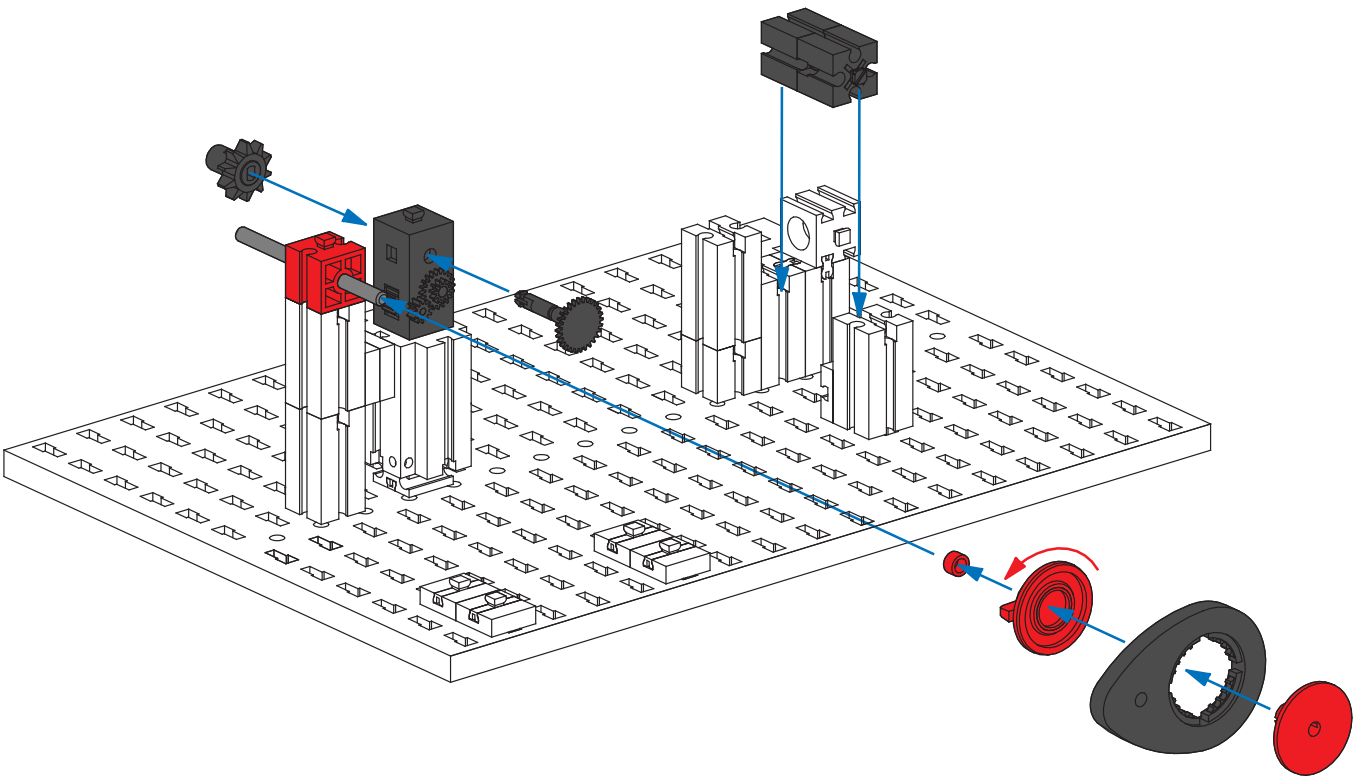

5

2 x

1 x

1 x

1 x

1 x

1 x

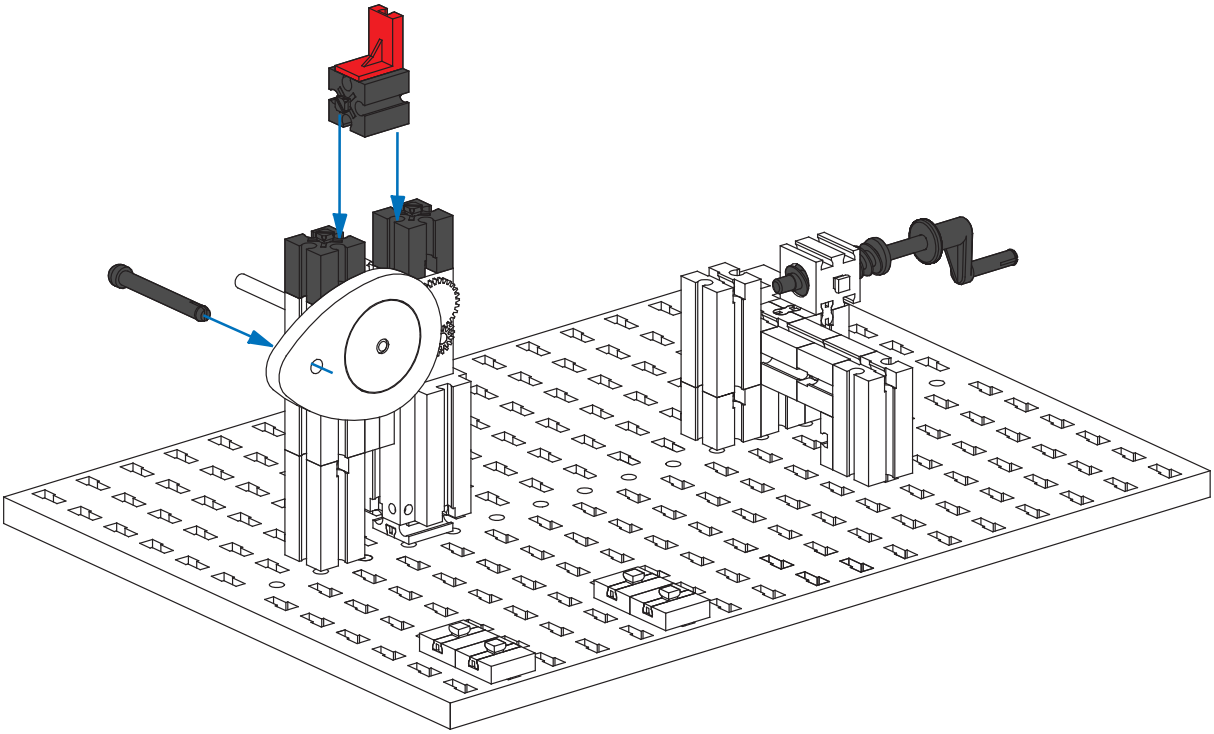

6

1 x

1 x

1 x

1 x

2 x

1 x

15

1 x

1 x

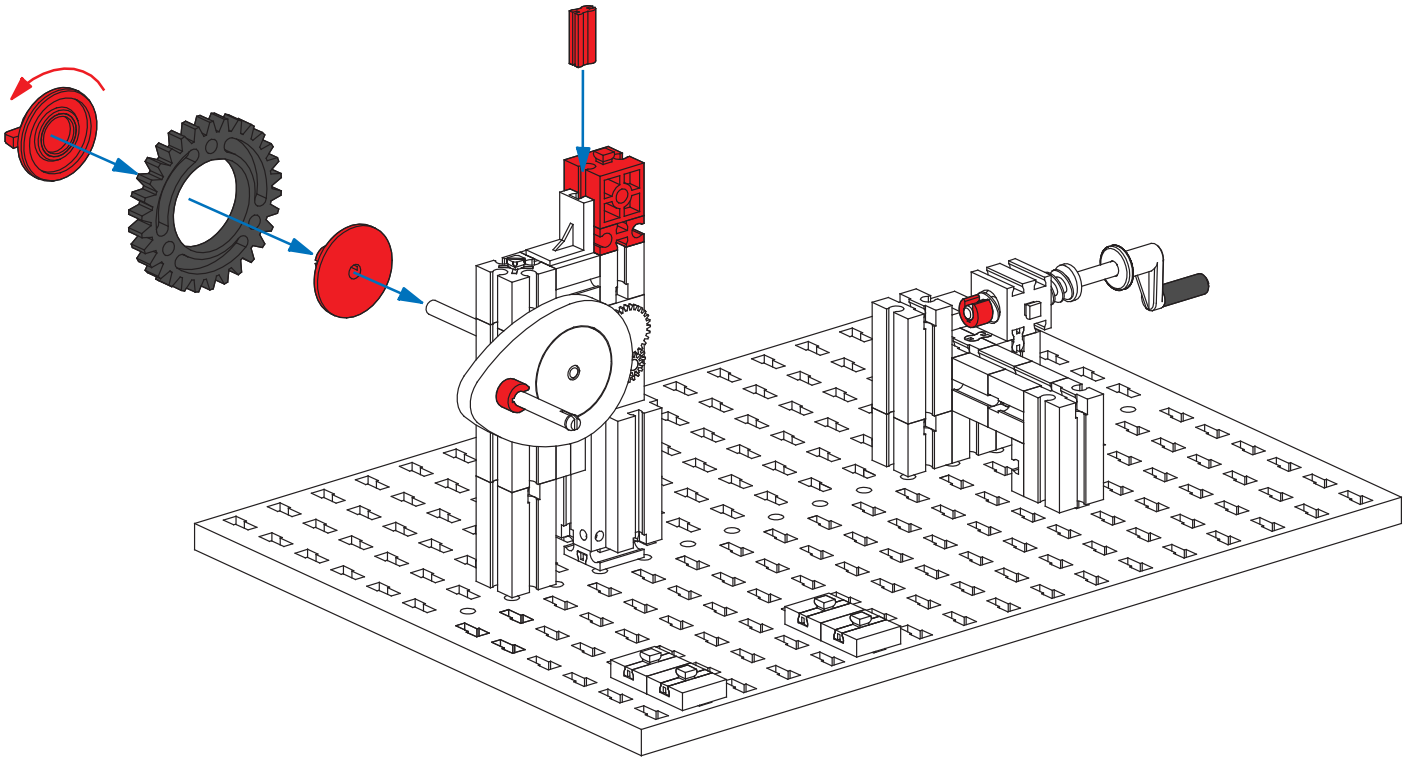

7

6 x

2 x

1 x

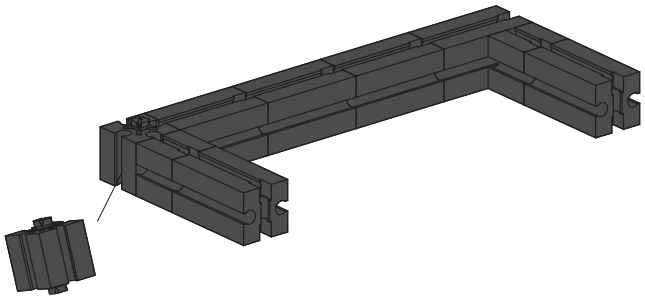

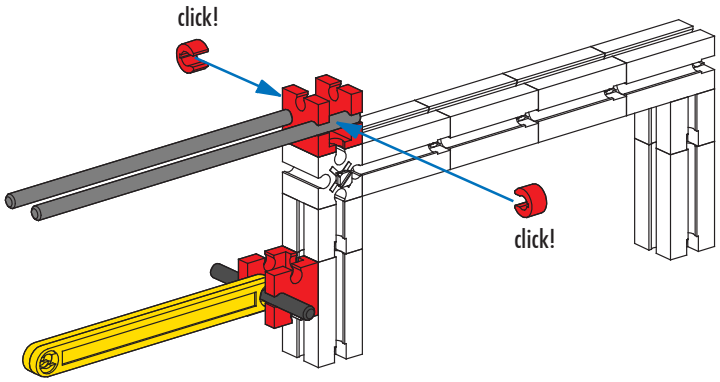

8

75 2 x

2 x

2 x

40 1 x

110 2 x

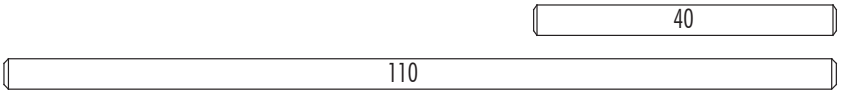

9

120 1 x

2 x

1 x

1 x

2 x

4

2 x

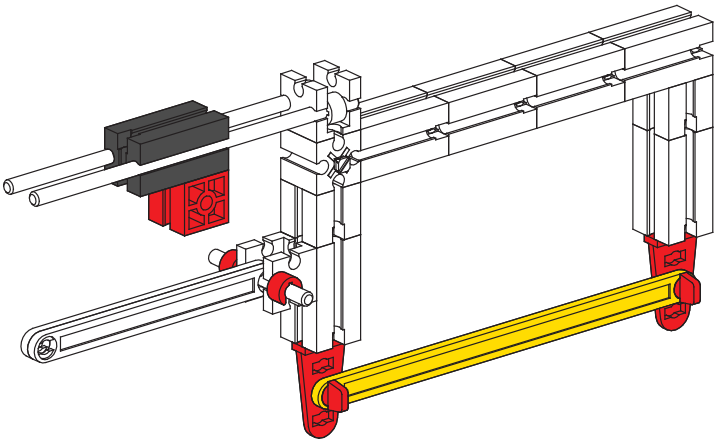

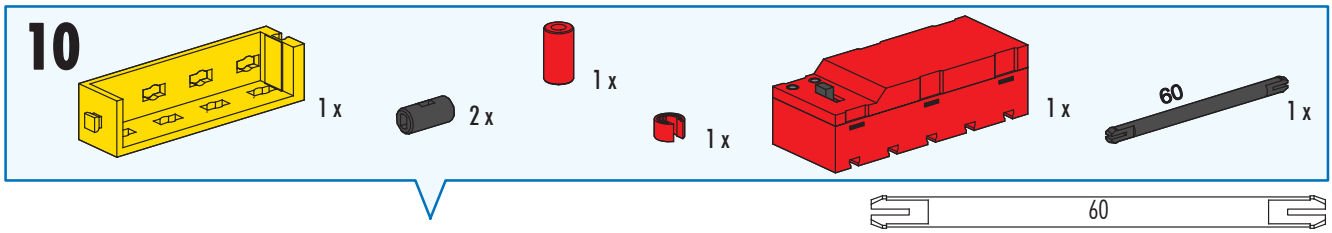
10
1 x
2 x
1 x
1 x
1 x
60
1 x
60

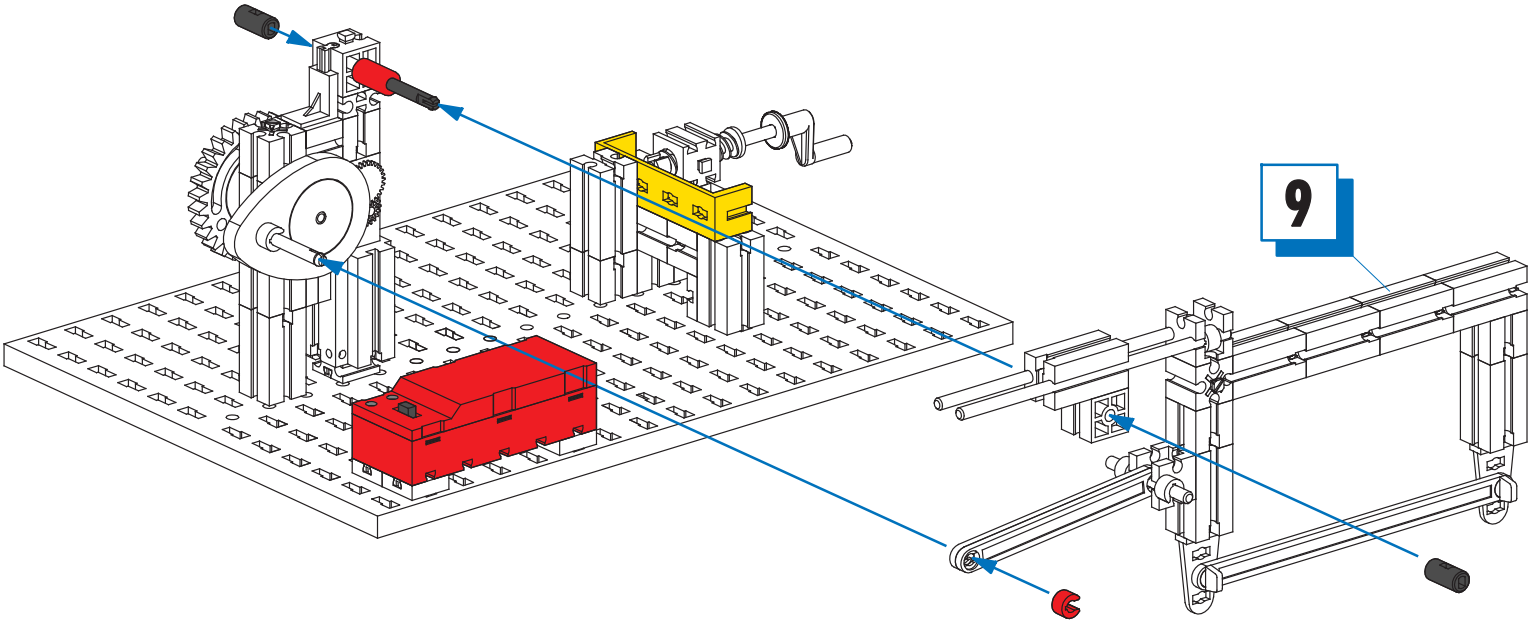
9

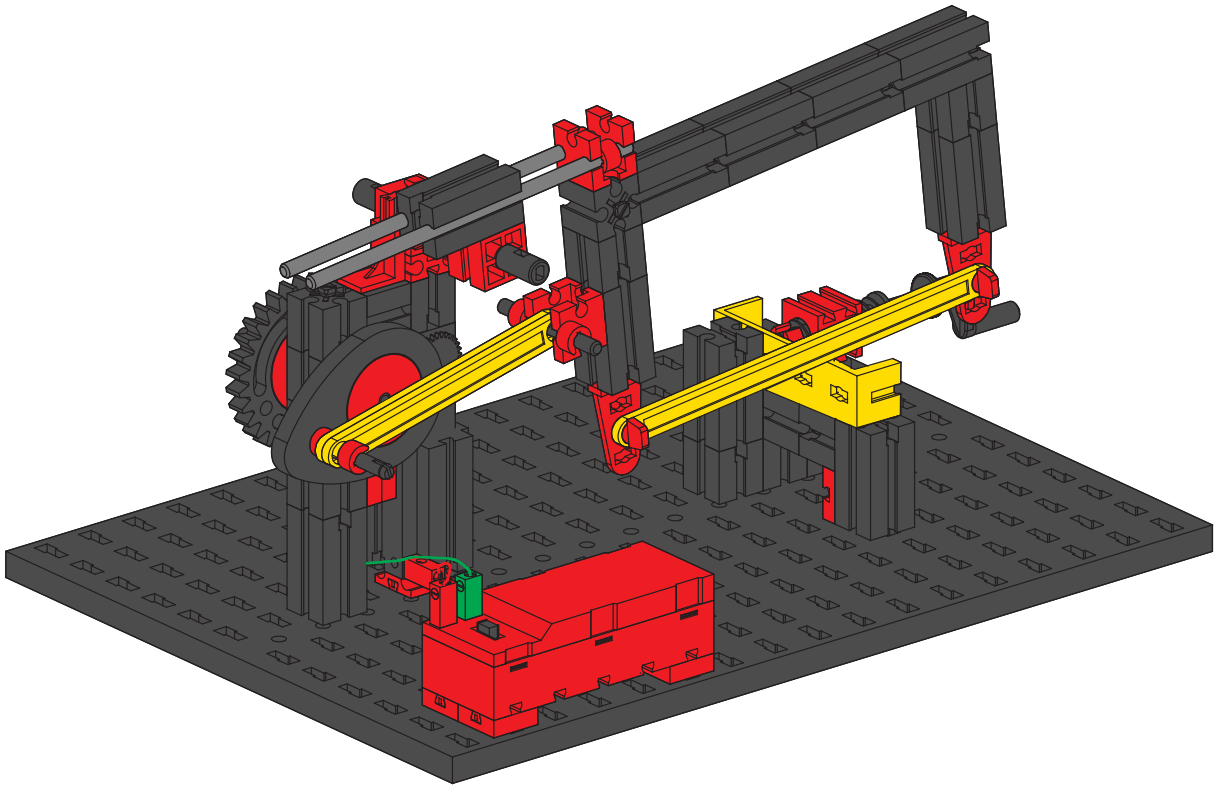

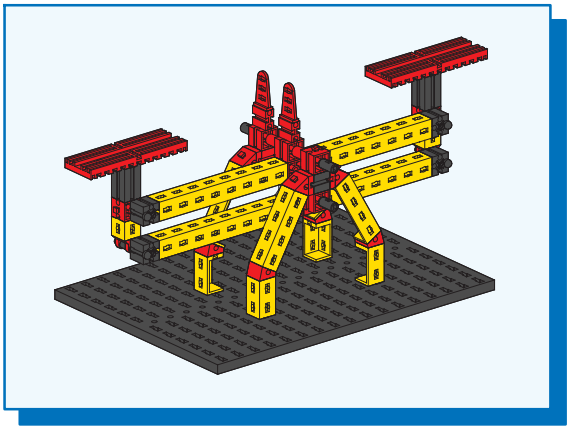

Balkenwaage
Beam and scales
Crochet-bascule

Balansweegschaal
Balanza de brazos
Balança de pratos

Bilancia a braccio
Весы с коромыслом
天平

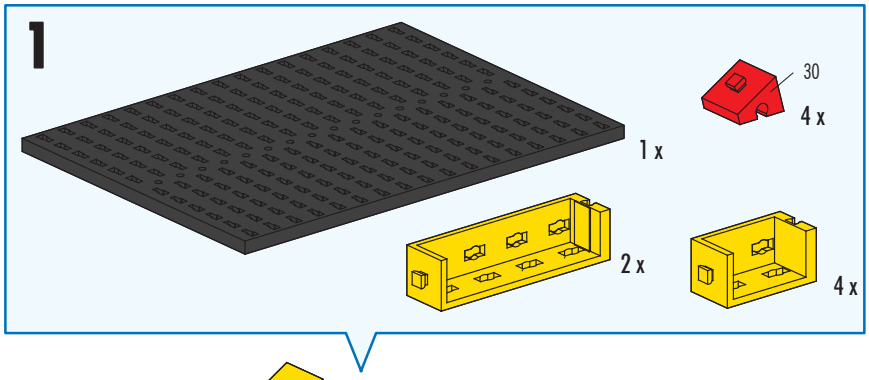

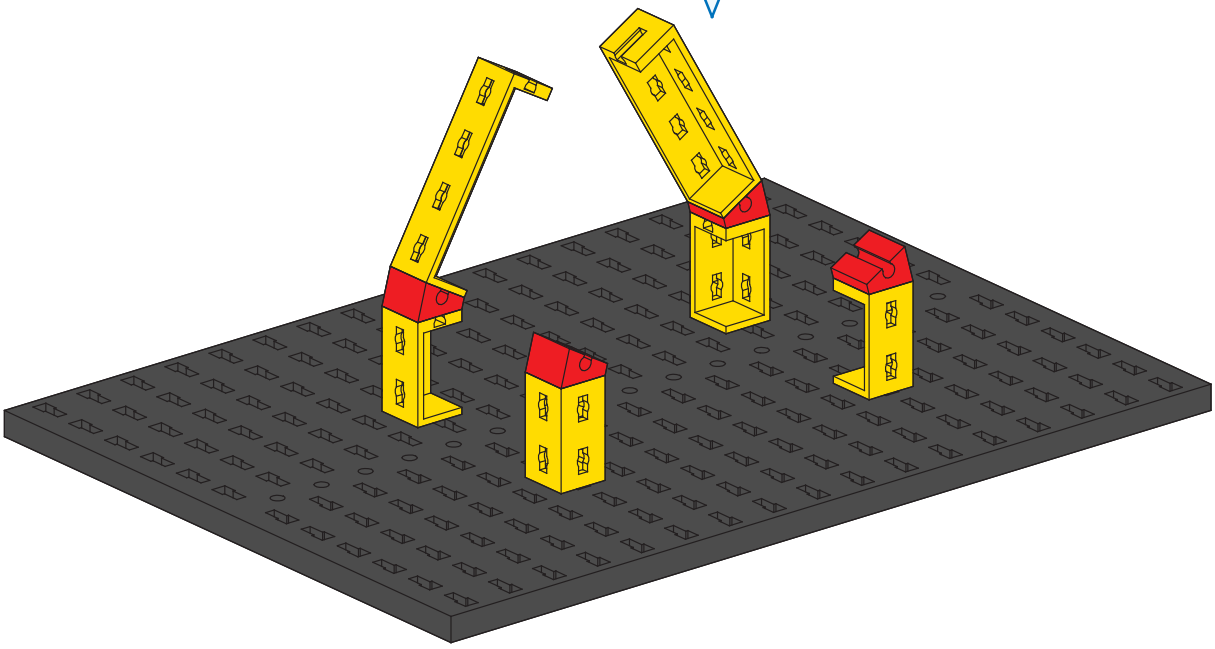

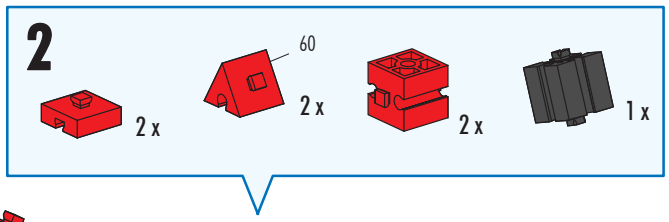

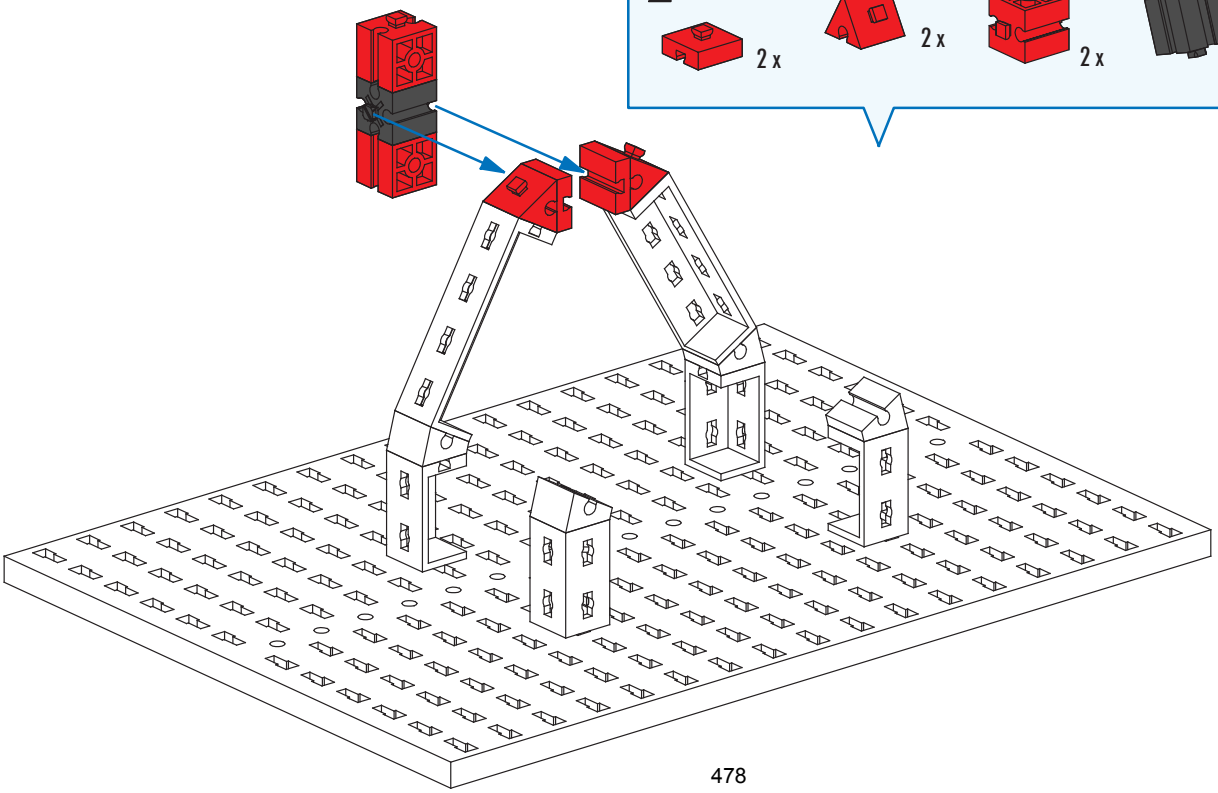

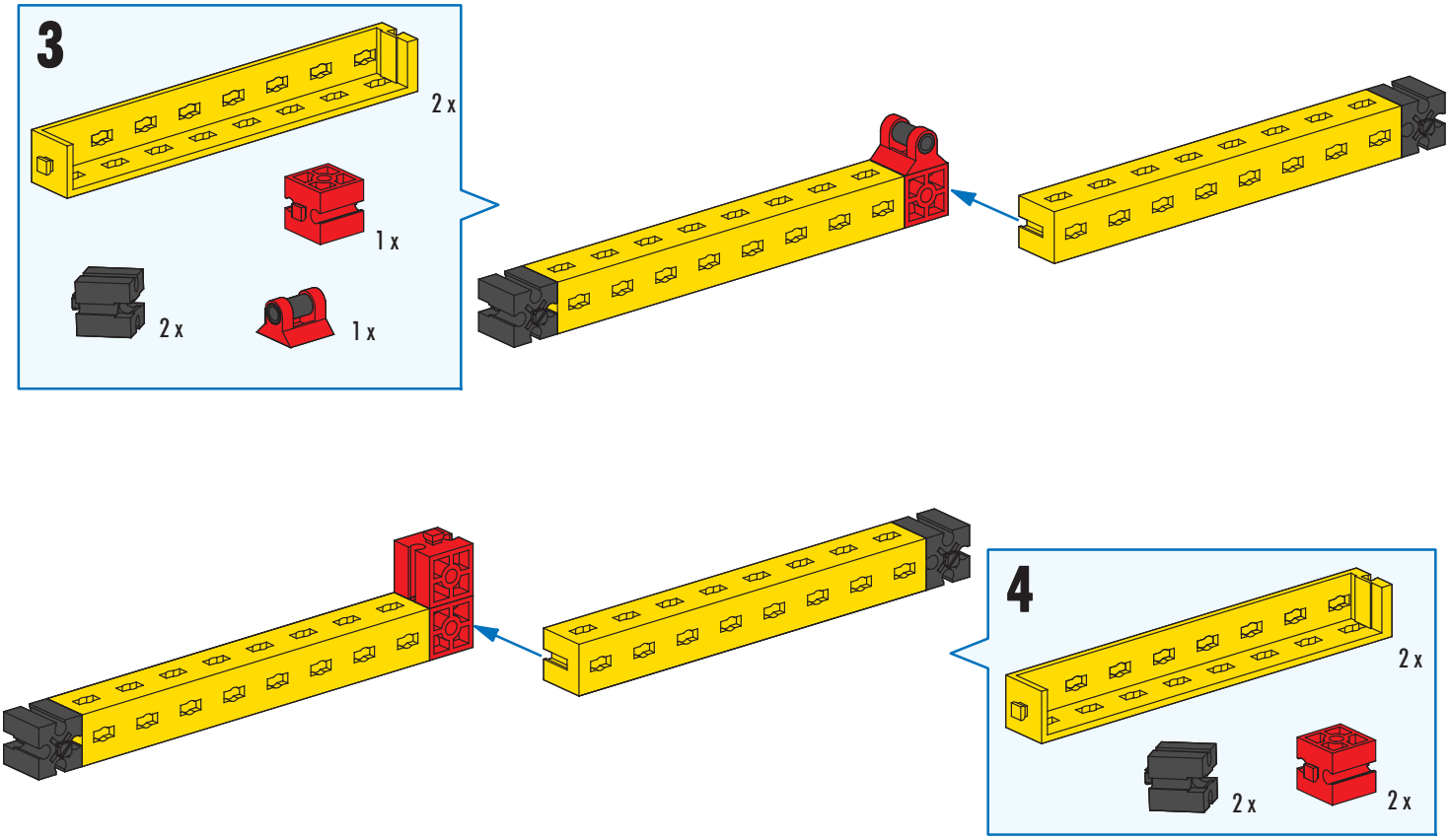
3
2 x
1 x
2 x
1 x
4
2 x
2 x
2 x

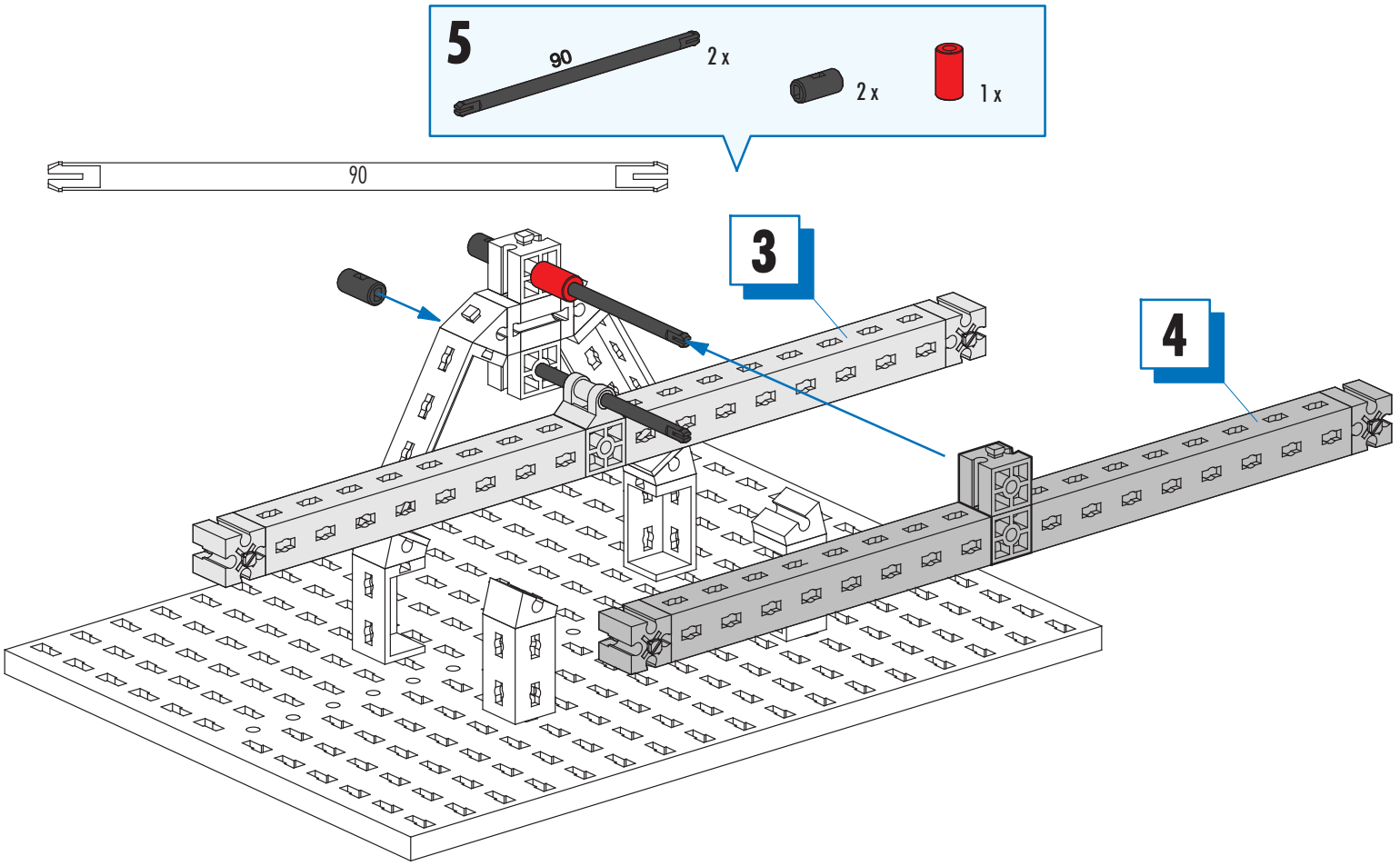
5
90
2 x
2 x
1 x
90
3
4

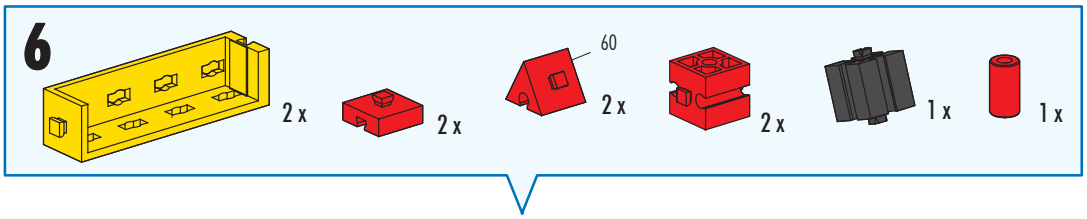
6
2 x
2 x
60
2 x
2 x
1 x
1 x

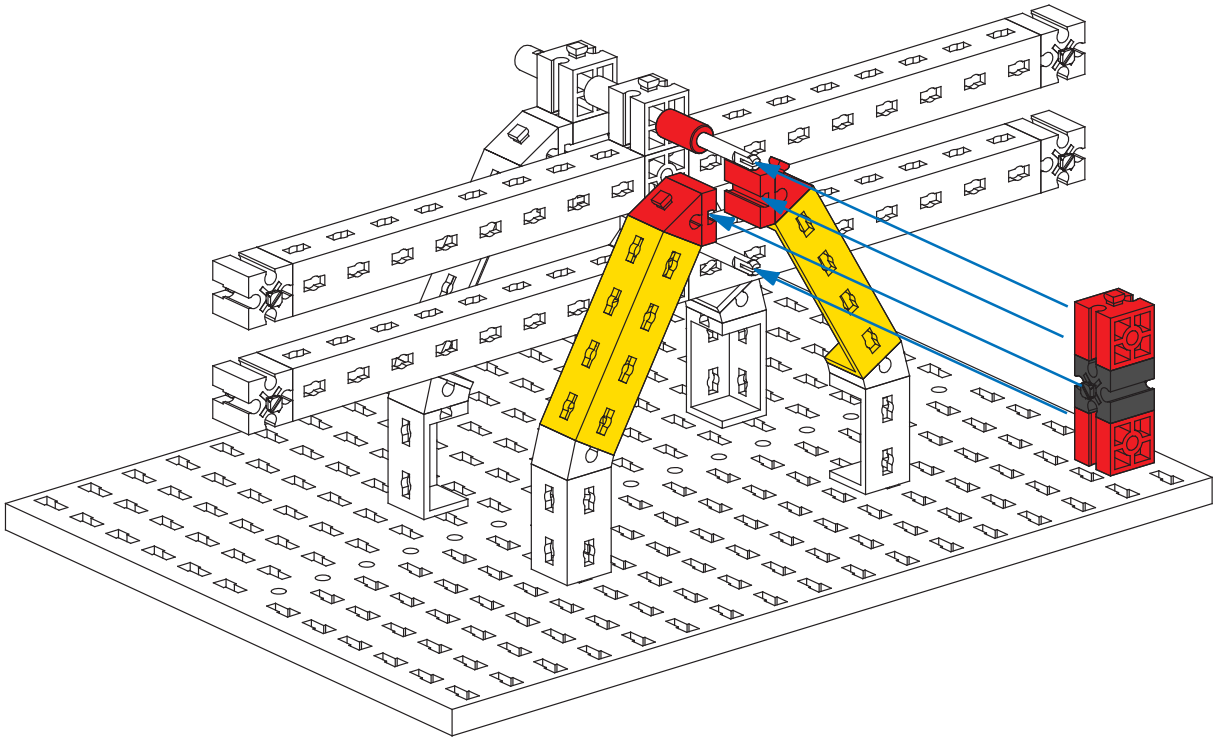

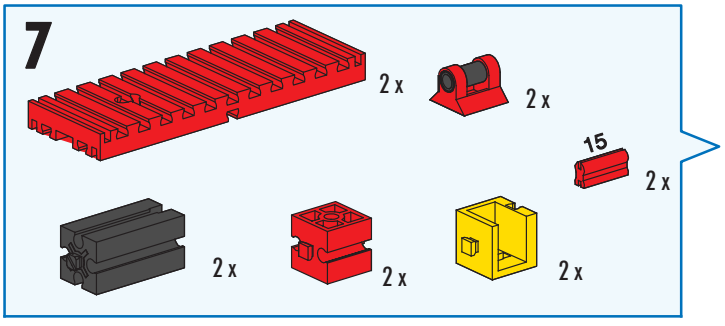
7
2 x
2 x
15
2 x
2 x
2 x
2 x

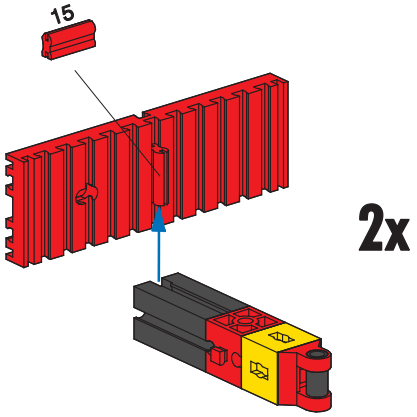
15
2x

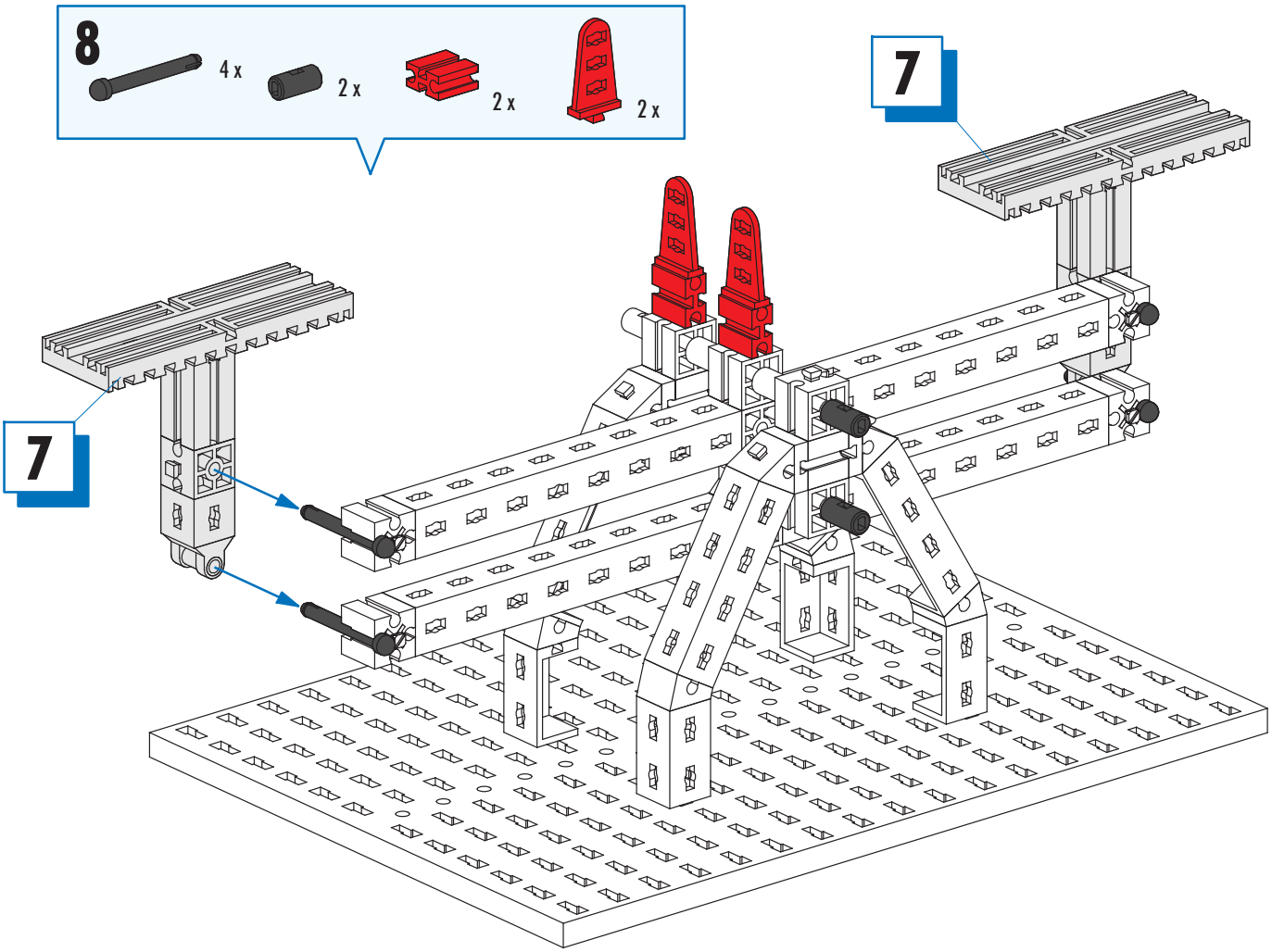

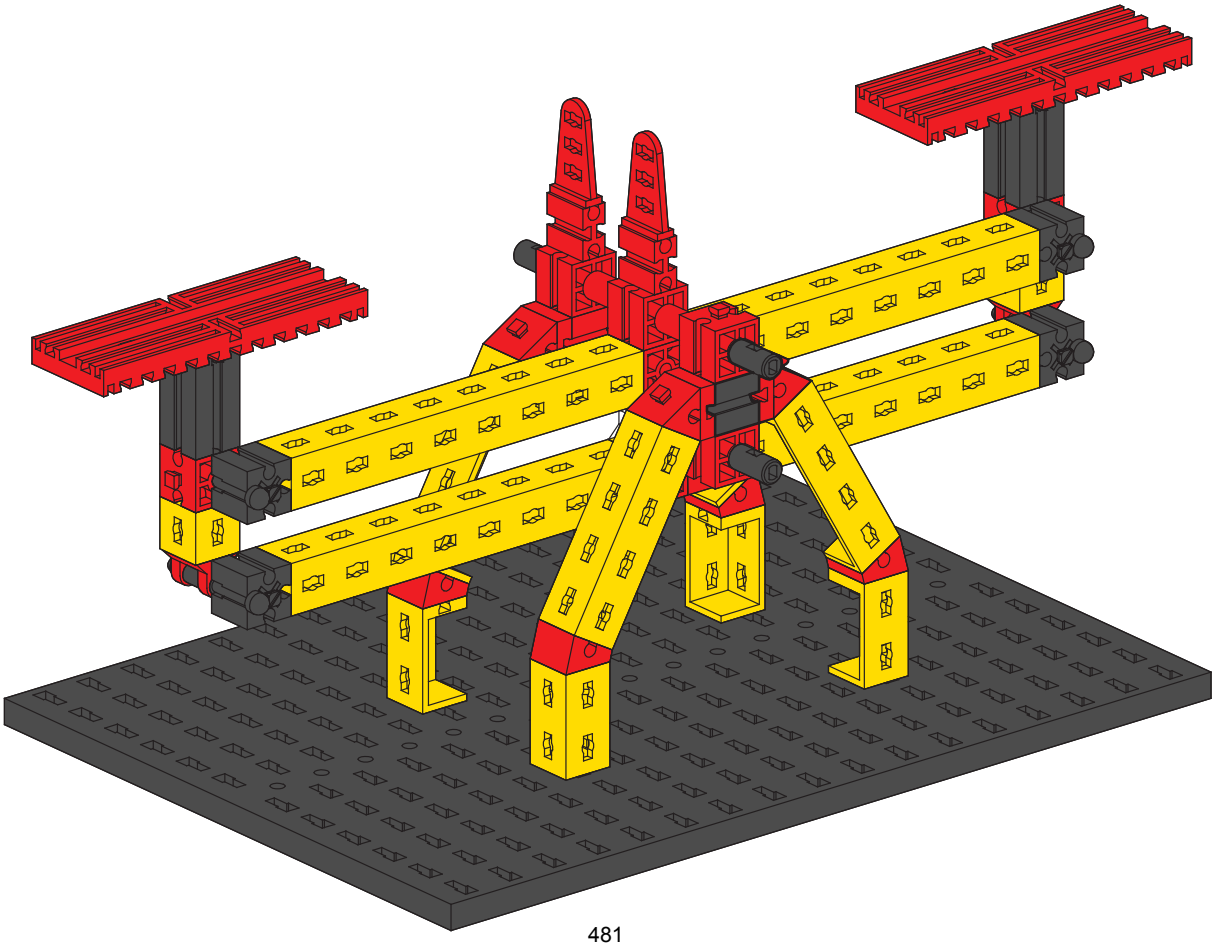

481

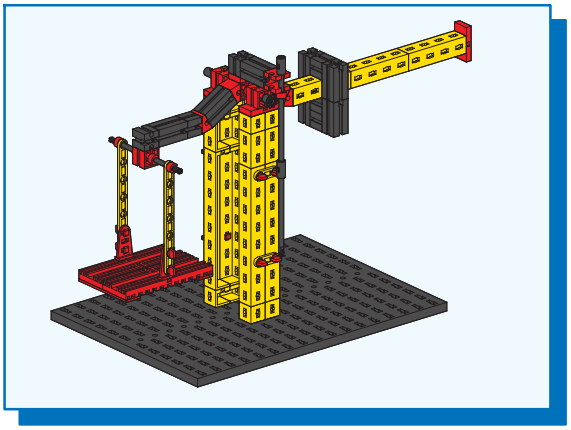

Waage mit Laufgewicht
Scales with sliding weight
Balance à poids mobile

Weegschaal met schuifgewicht
Balanza con pesa corrediza
Balança com peso cursor

Bilancia con cursore
Весы с подвижным грузом
带滑动秤锤的天平

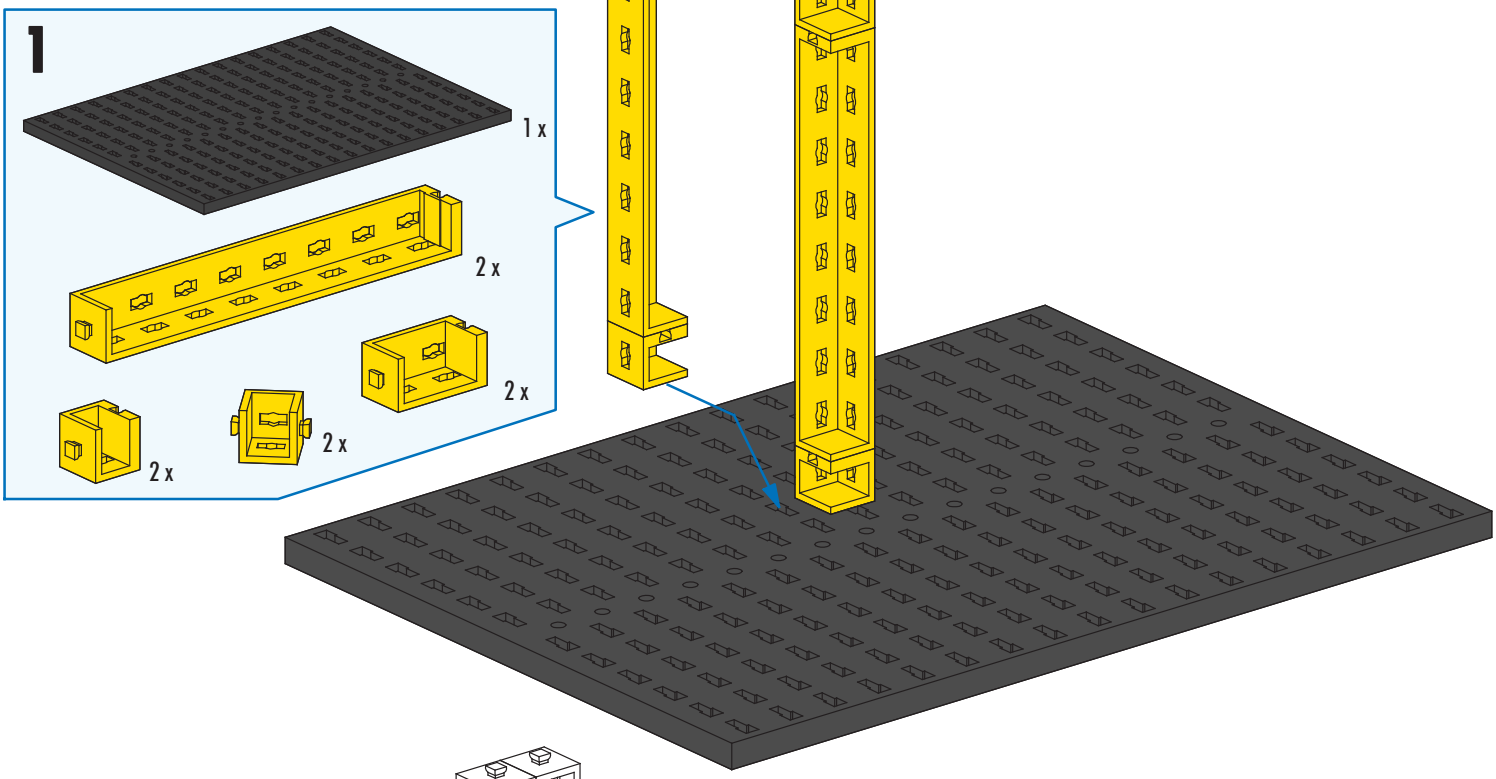

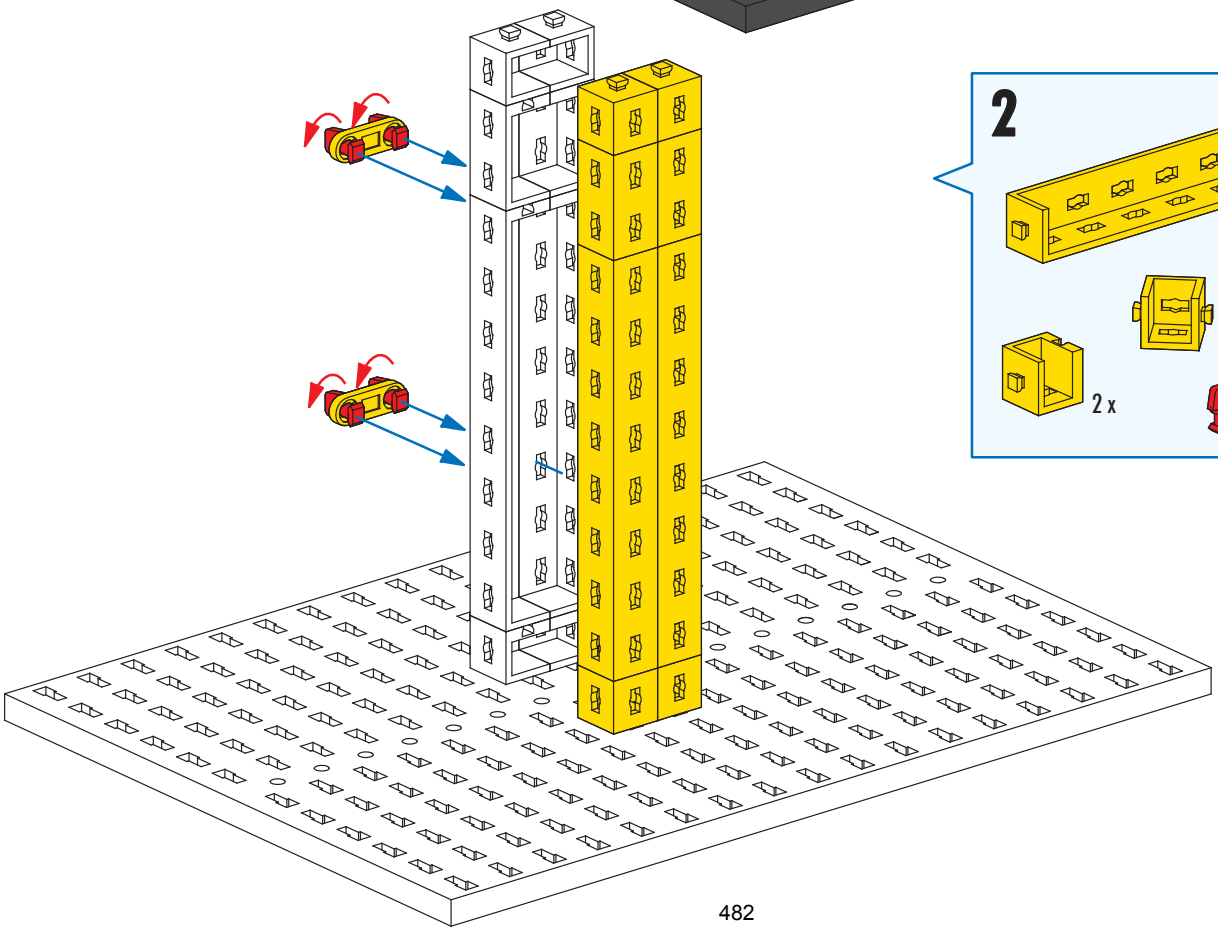

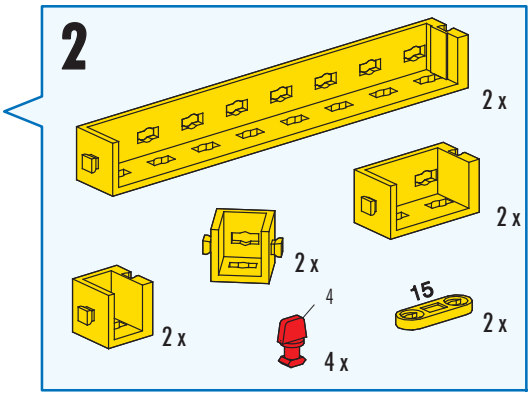

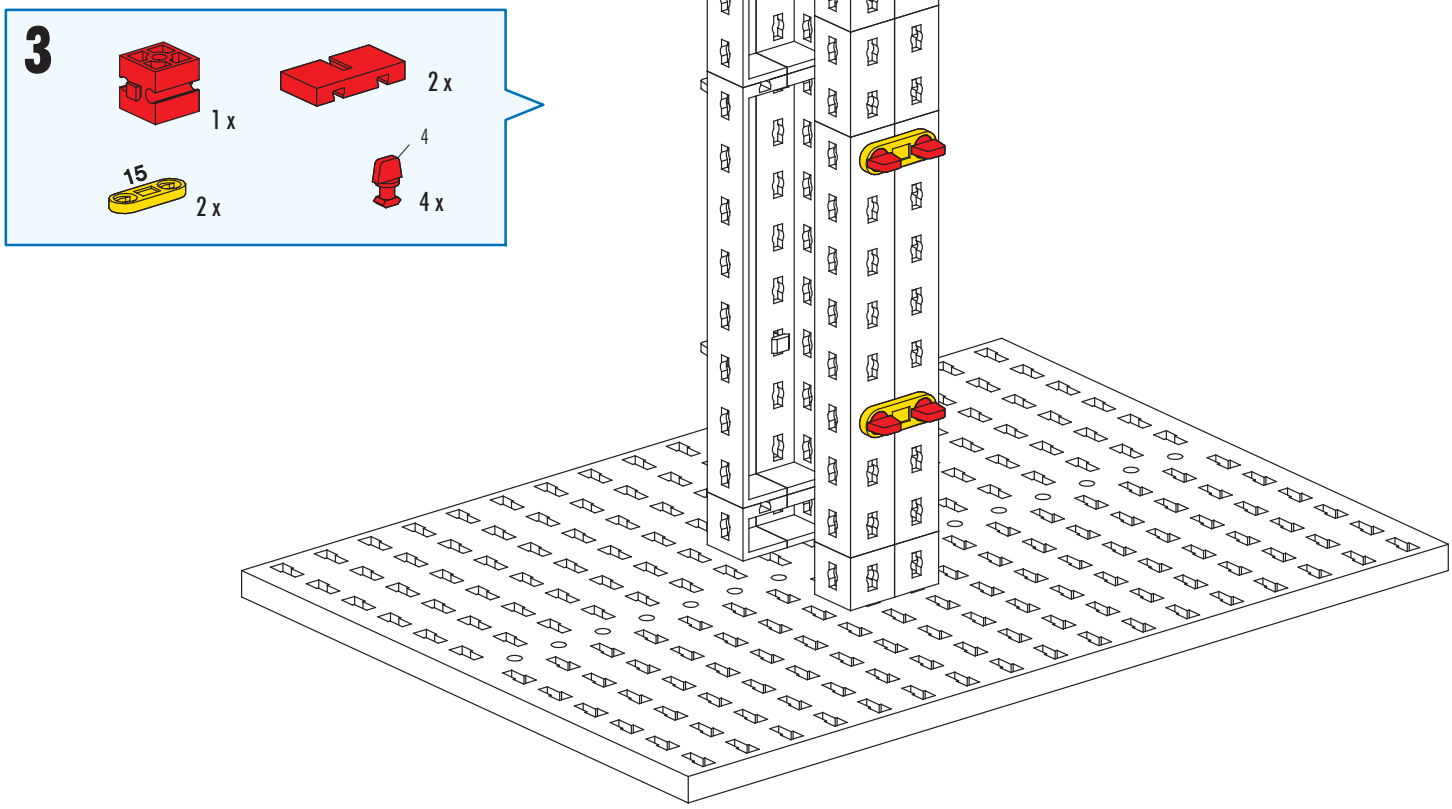
3
1 x
2 x
15
2 x
4
4 x

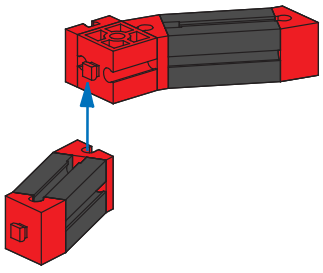

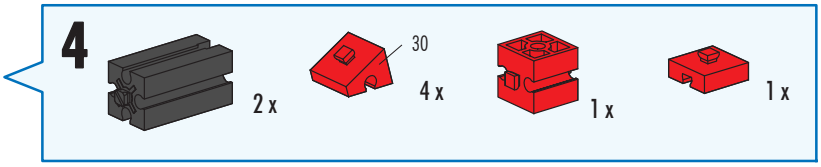
4
2 x
30
4 x
1 x
1 x

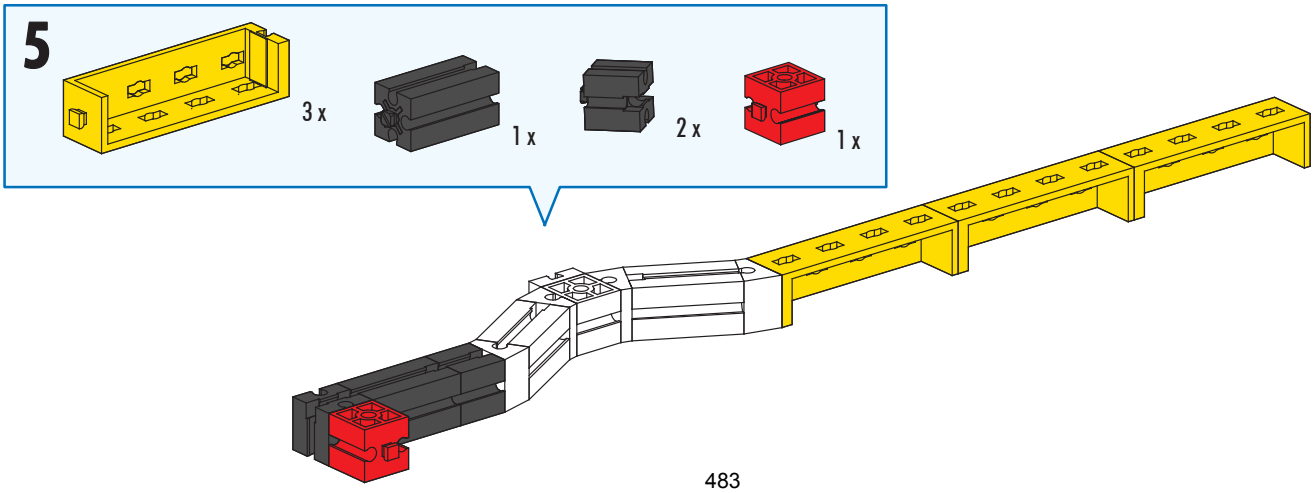
5
3 x
1 x
2 x
1 x

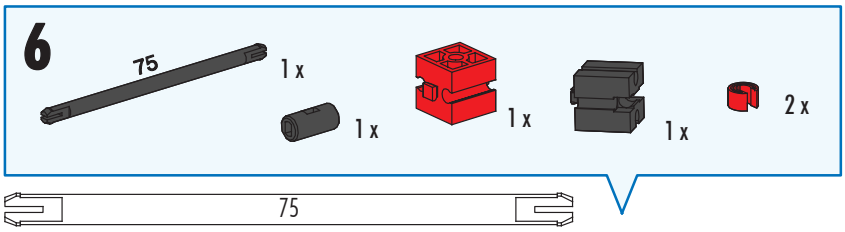
6
75
1 x
1 x
1 x
1 x
2 x
75

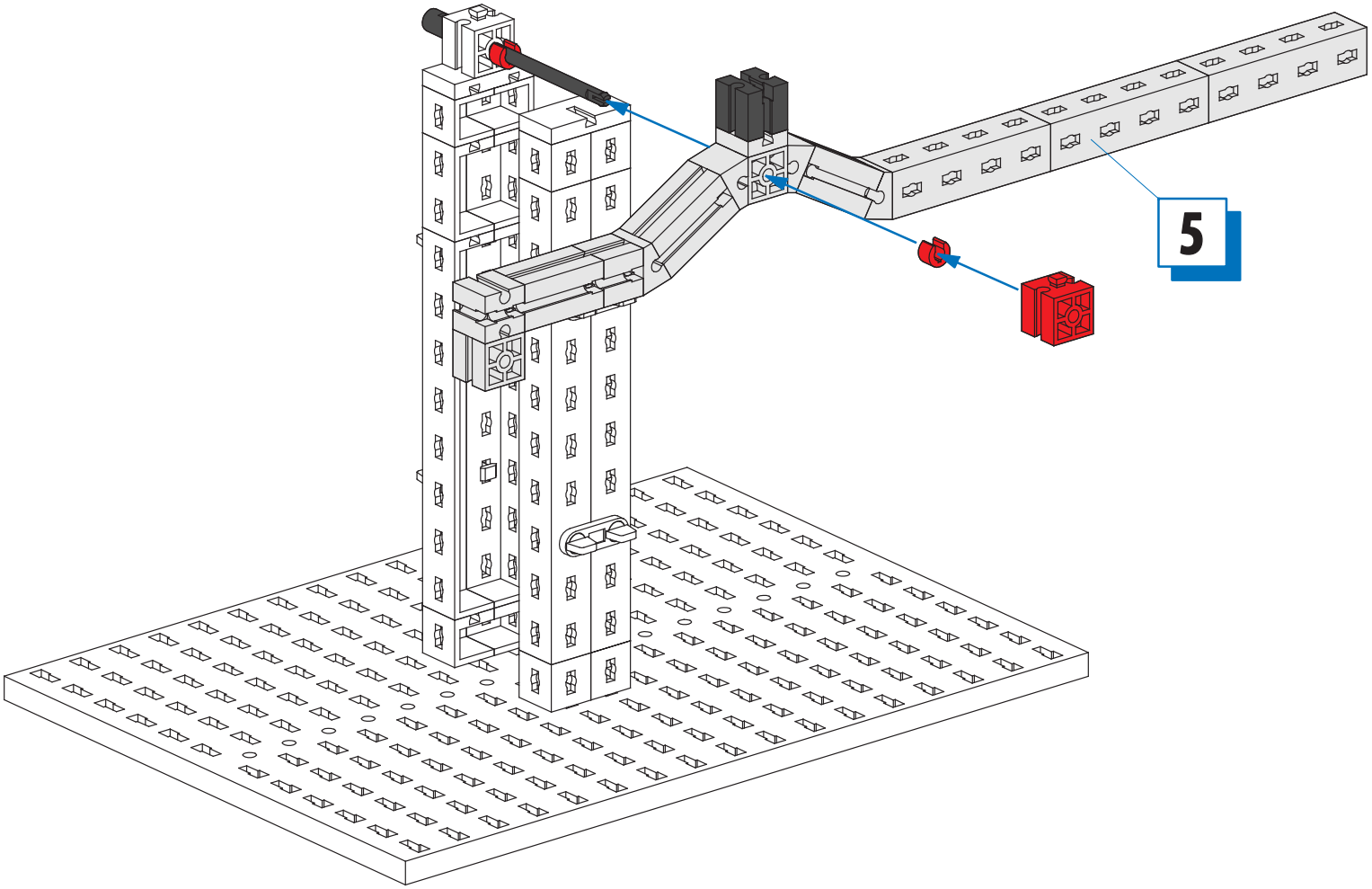
5

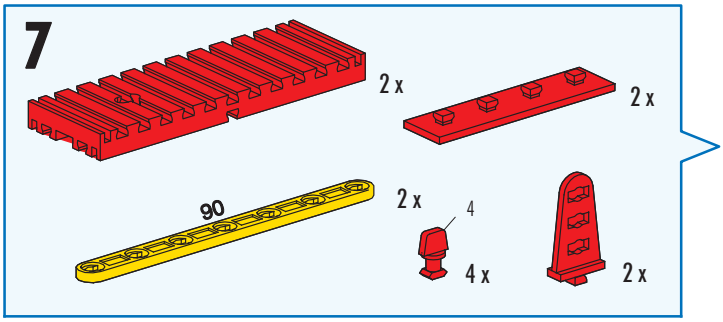
7
2 x
2 x
90
2 x
4
4 x
2 x

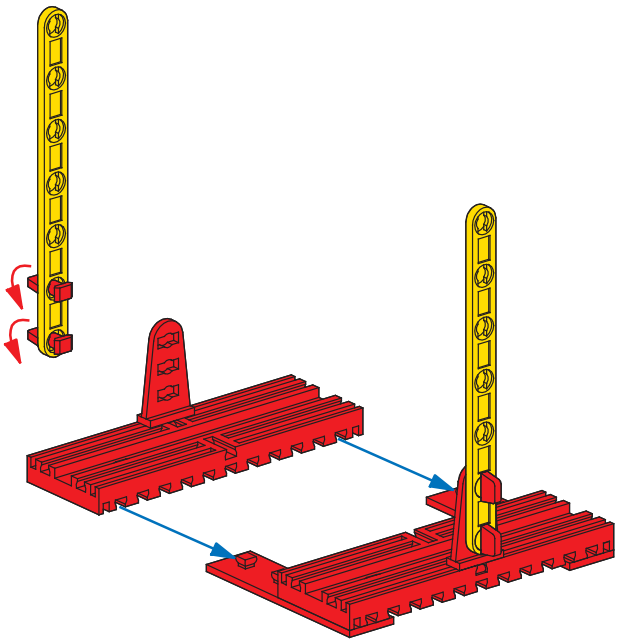

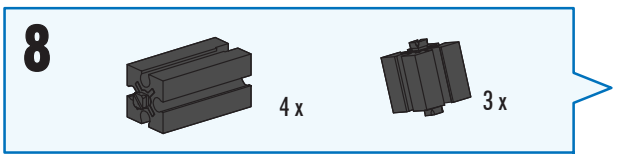
8
4 x
3 x

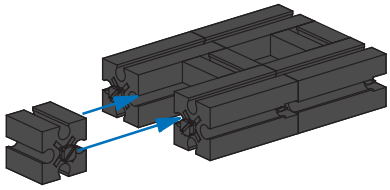

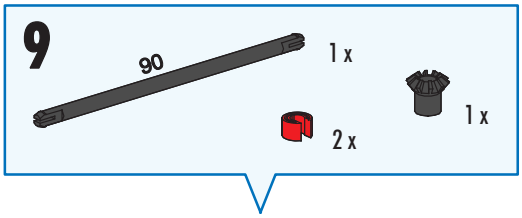
9
90
1 x
1 x
2 x

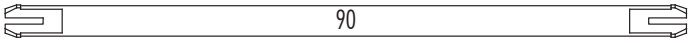
90

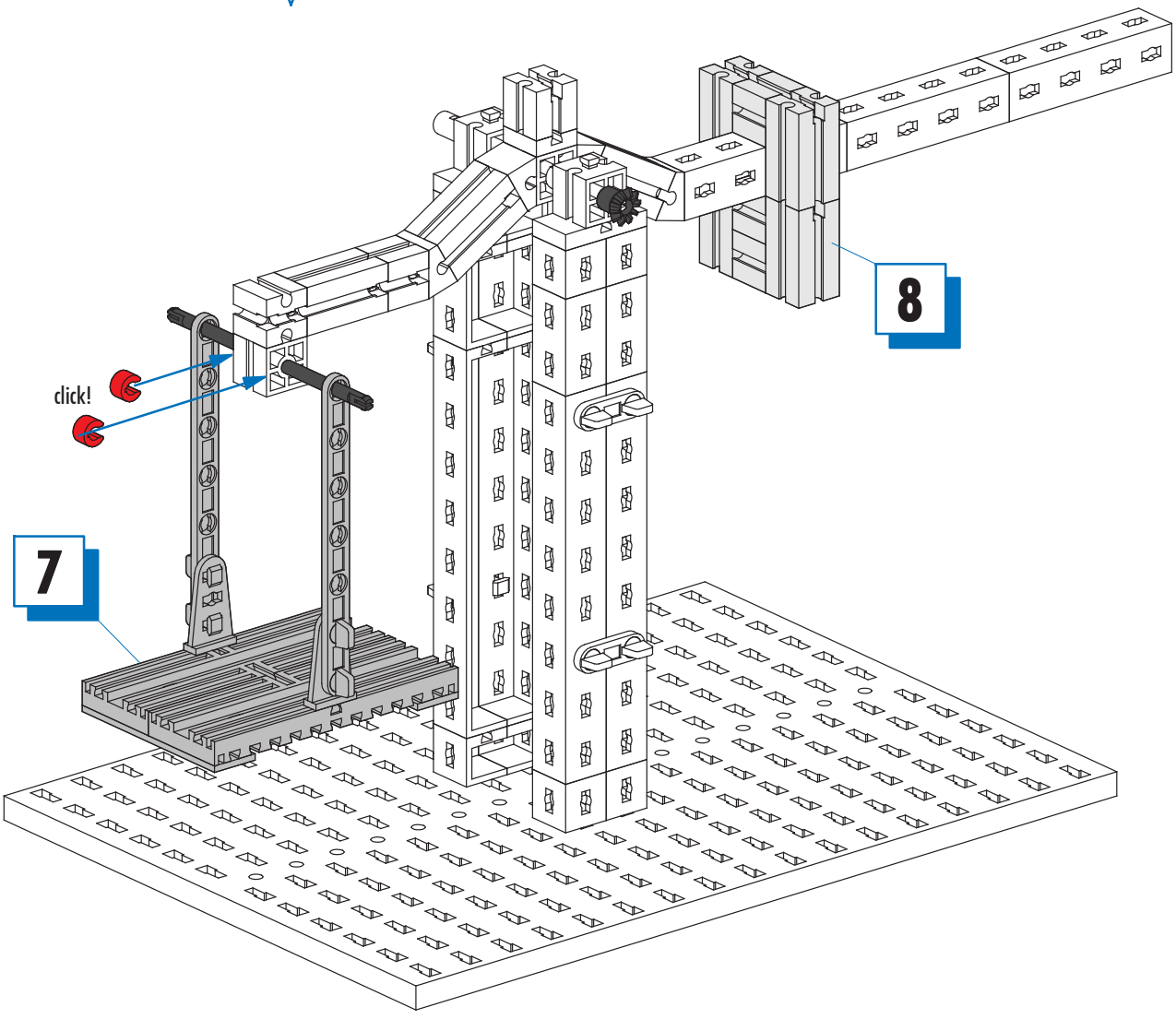
8
click!
7

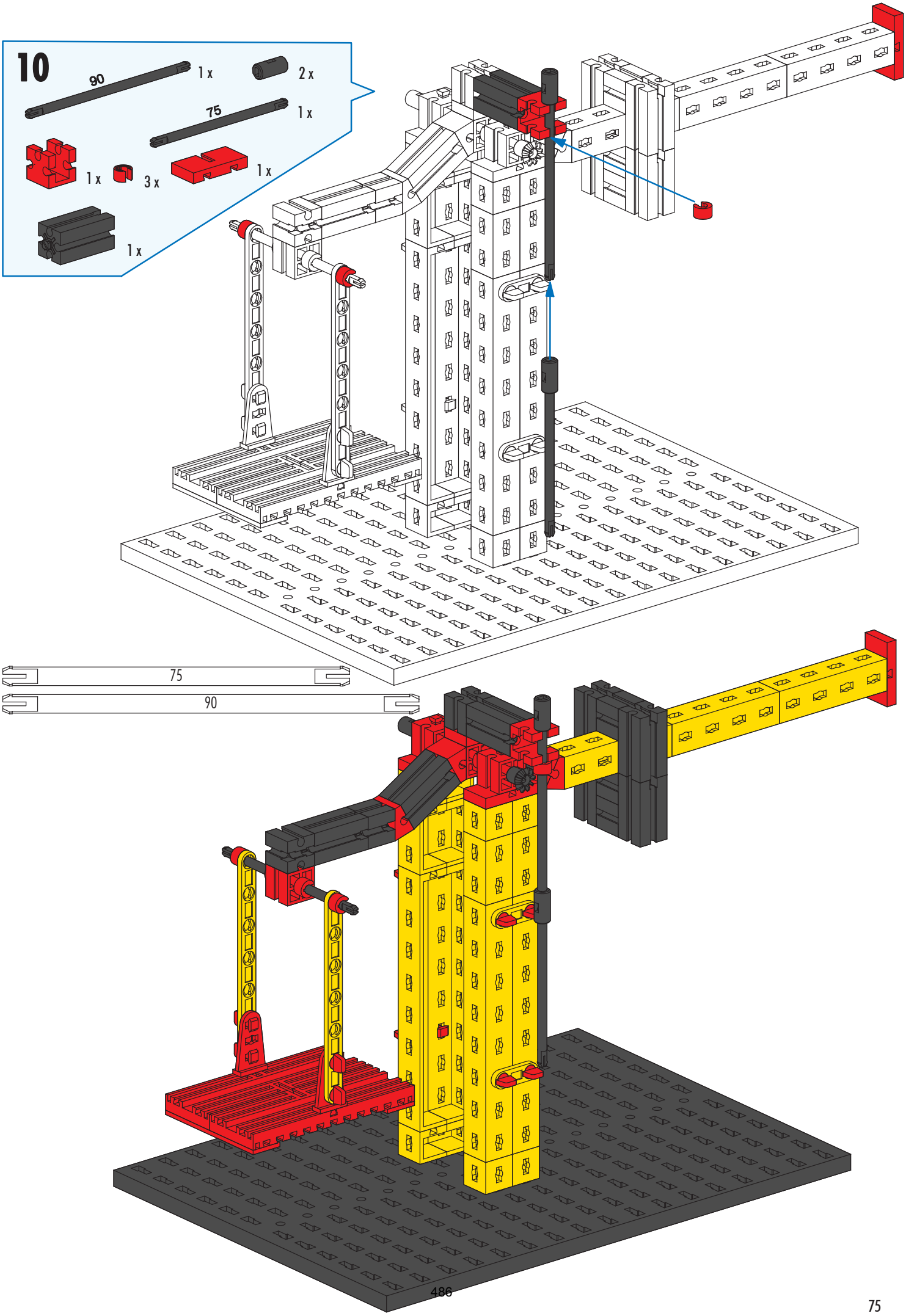
10
90
1 x
2 x
75
1 x
1 x
3 x
1 x
1 x
75
90

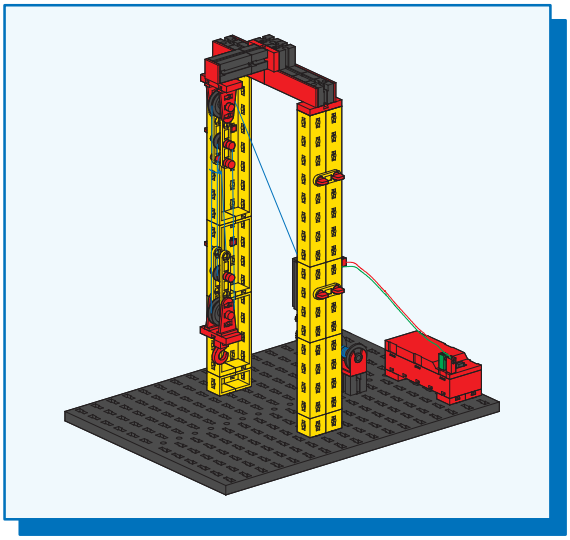

Flaschenzug
Lifting tackle
Palan

Takel
Polipasto
Talha

Paranco
Таль
滑轮组

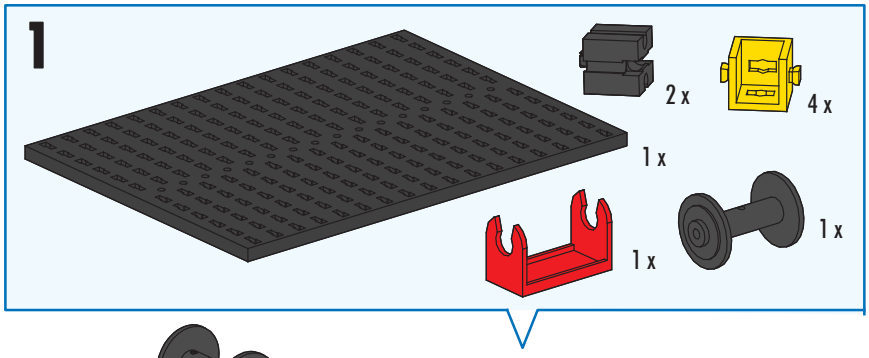

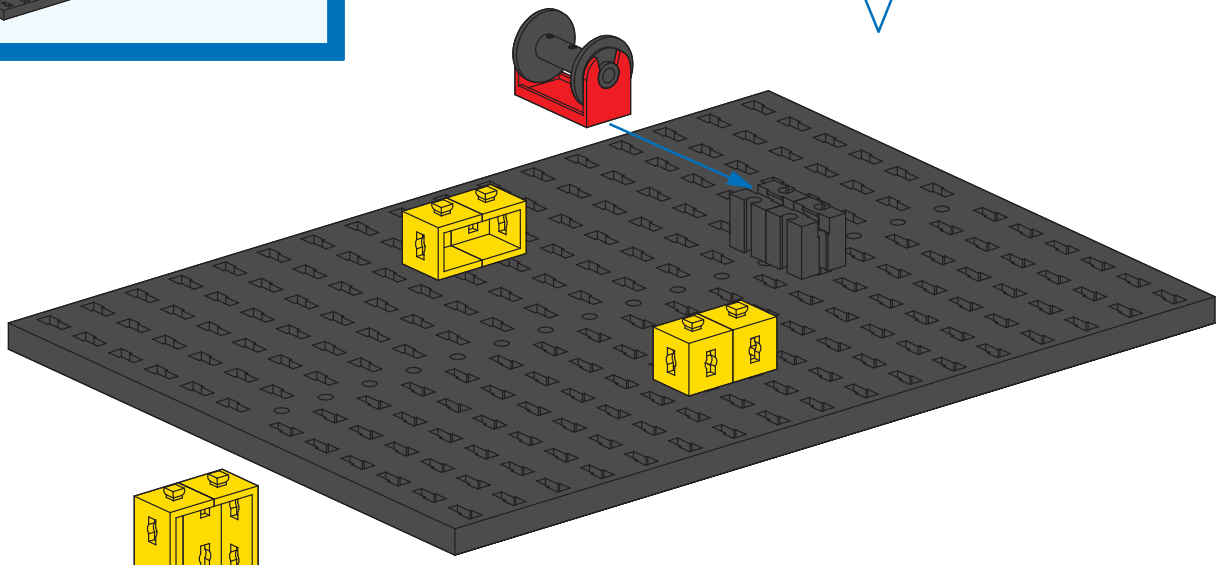

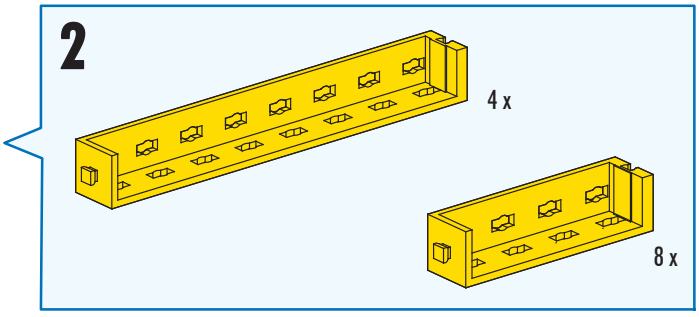

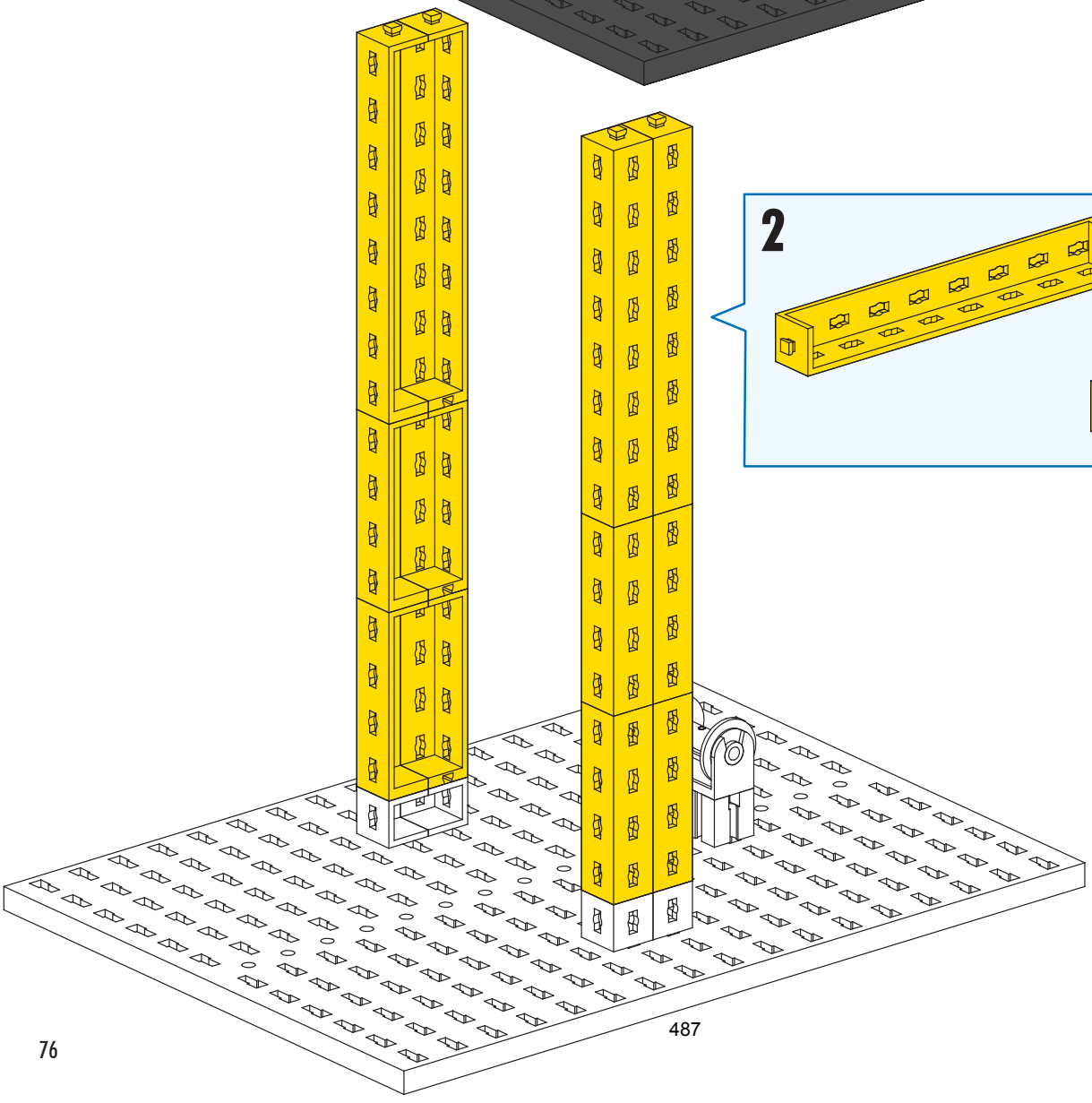

487

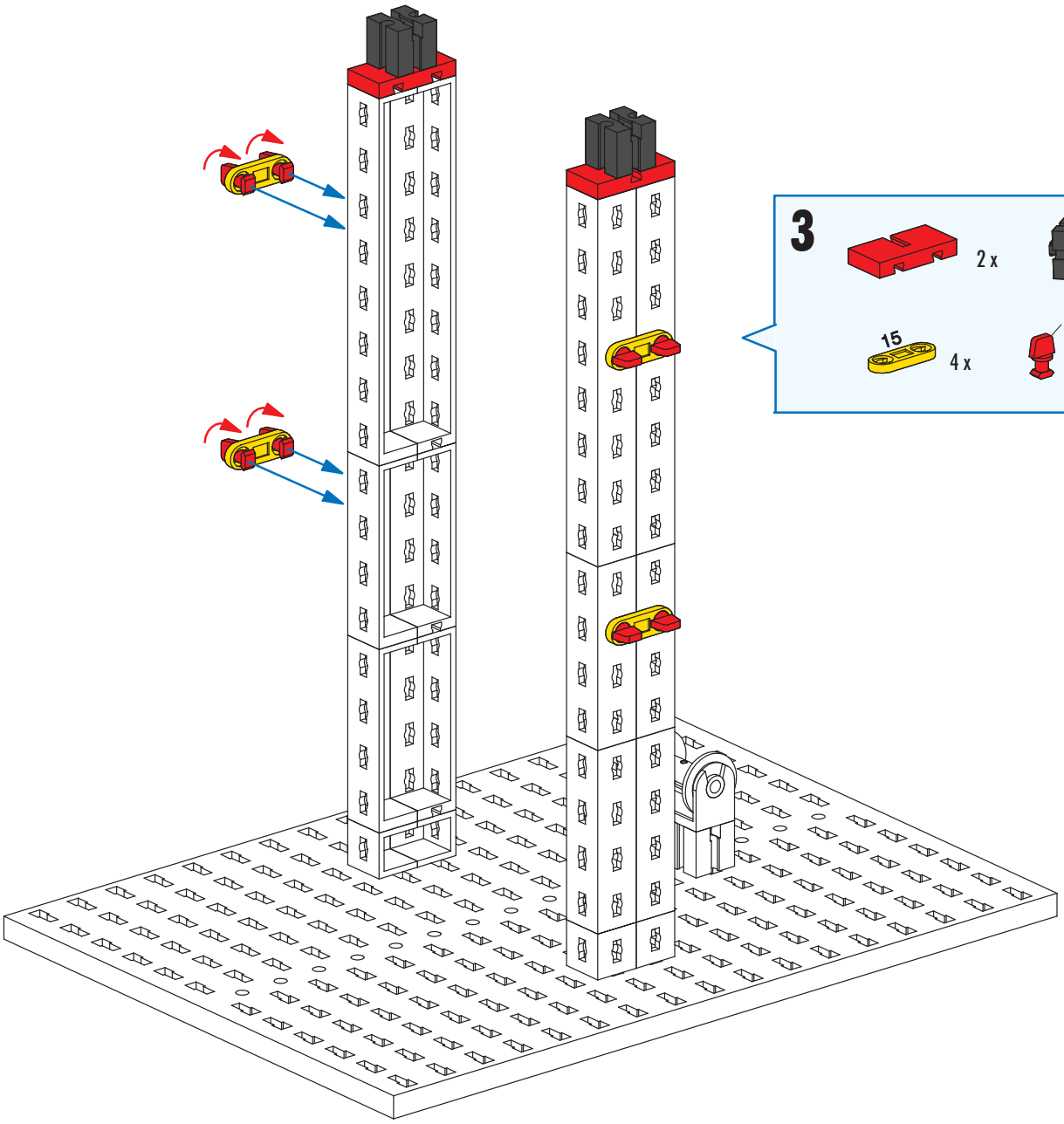

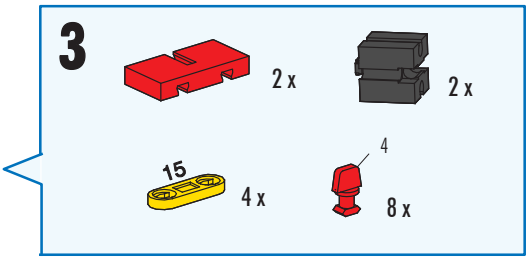
3
2 x
2 x
15
4 x
4
8 x

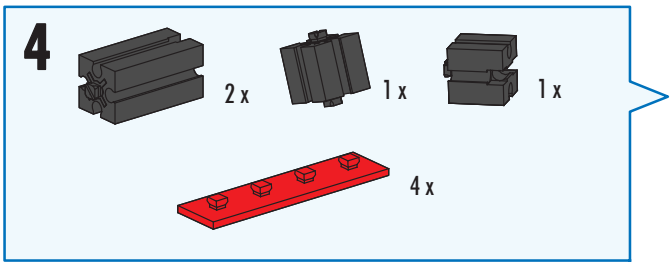
4
2 x
1 x
1 x
4 x

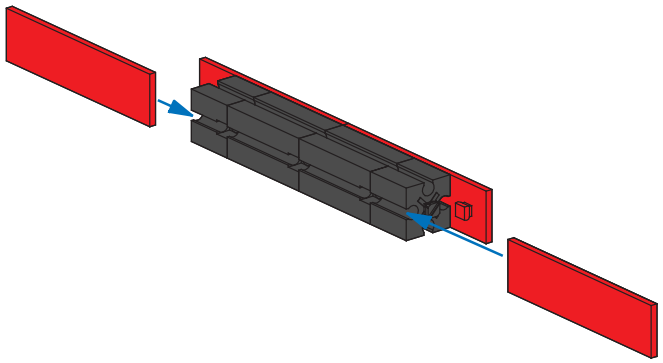

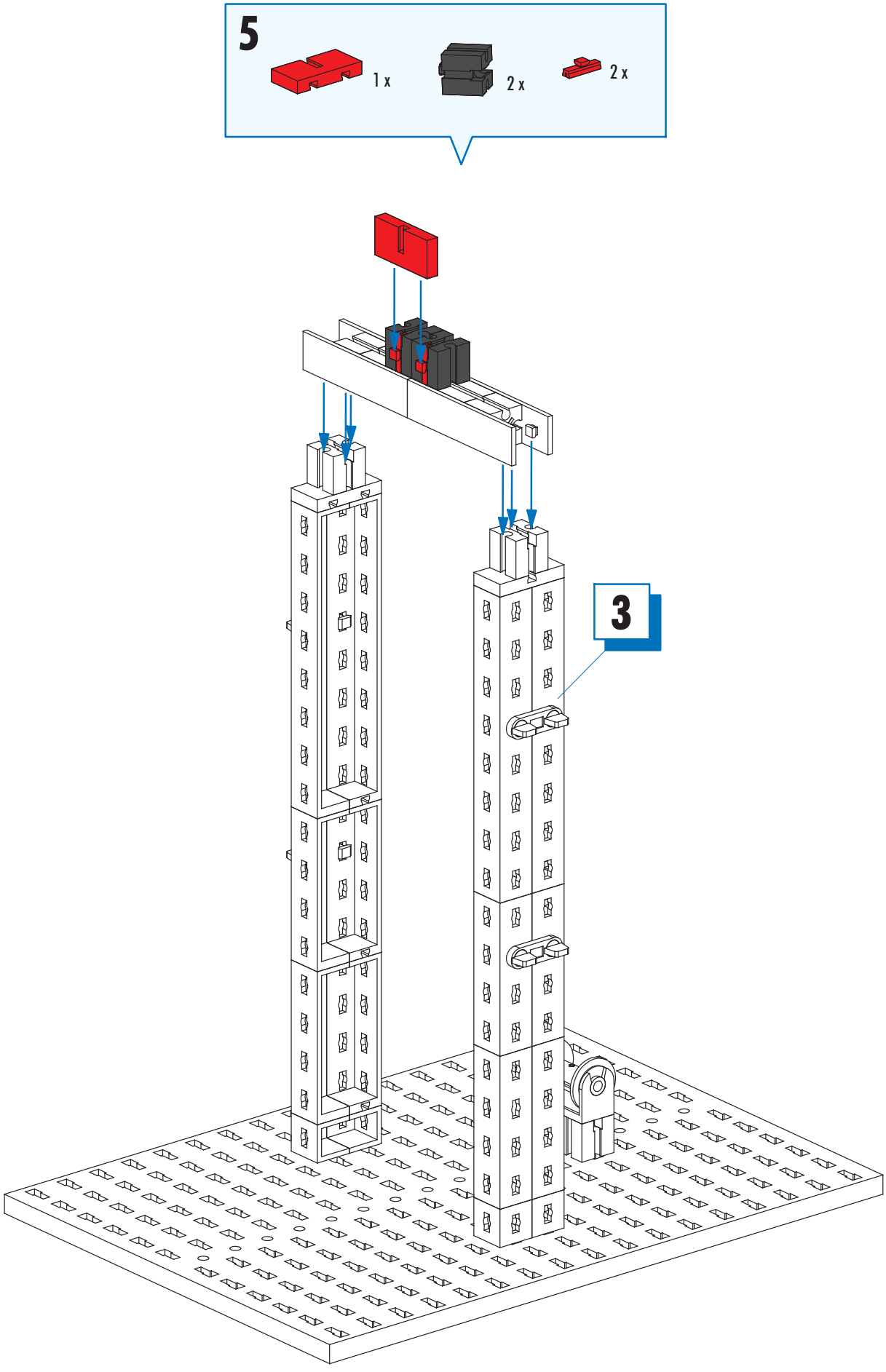
5
1 x
2 x
2 x
3

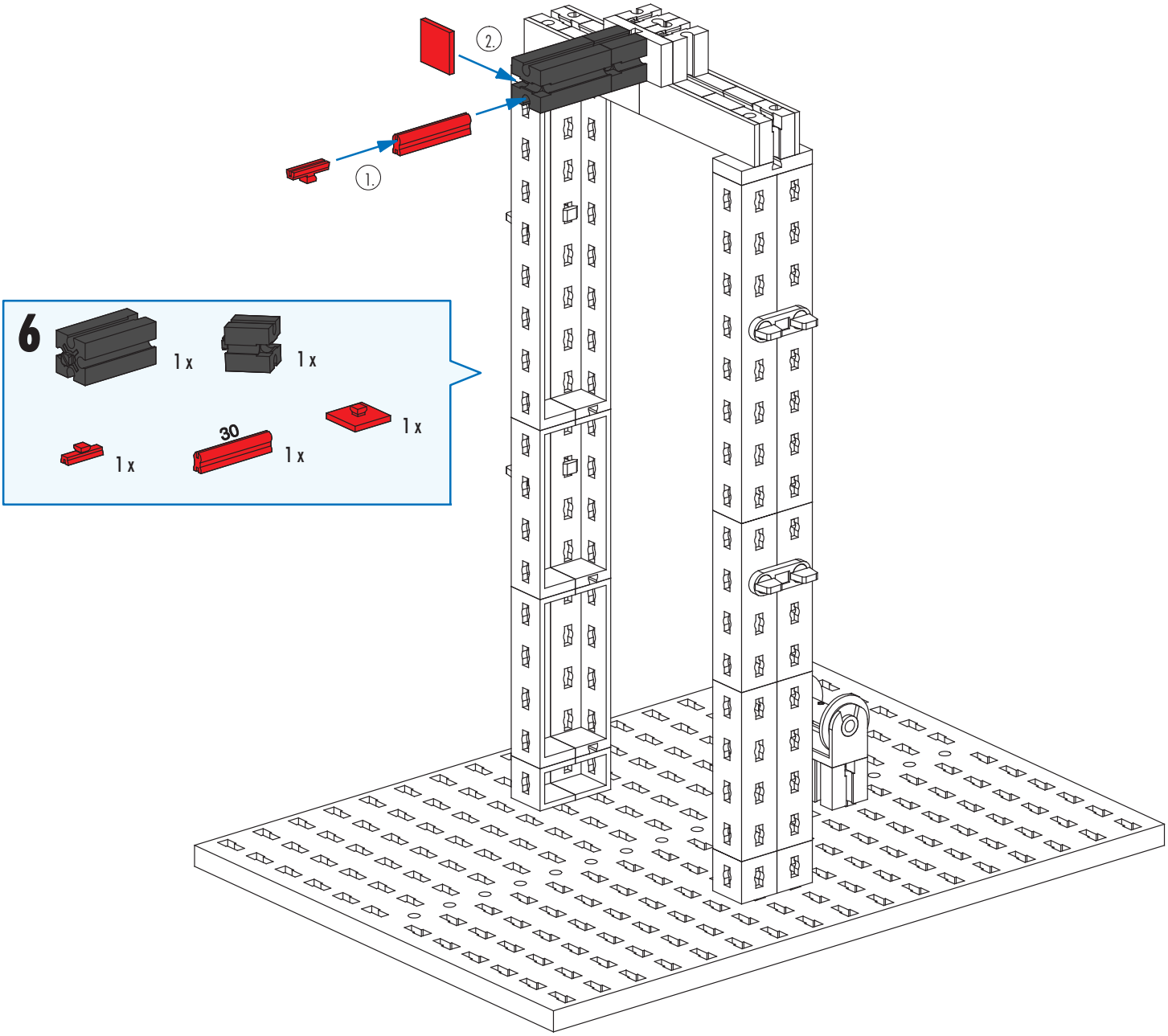
2.
1.

6
1 x
1 x
1 x
30
1 x
1 x

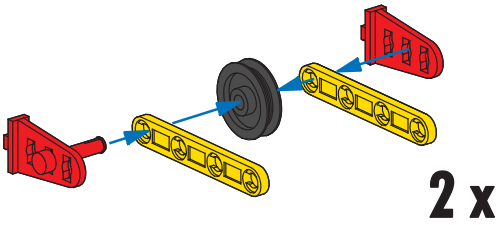
2 x

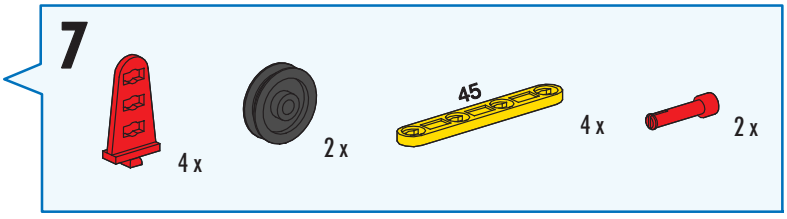
7
4 x
2 x
45
4 x
2 x

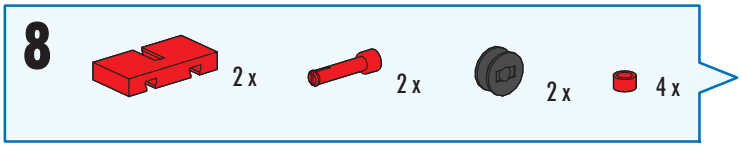
8
2 x
2 x
2 x
4 x

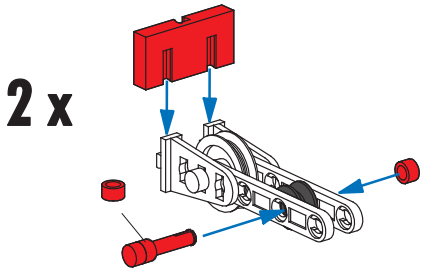
2 x

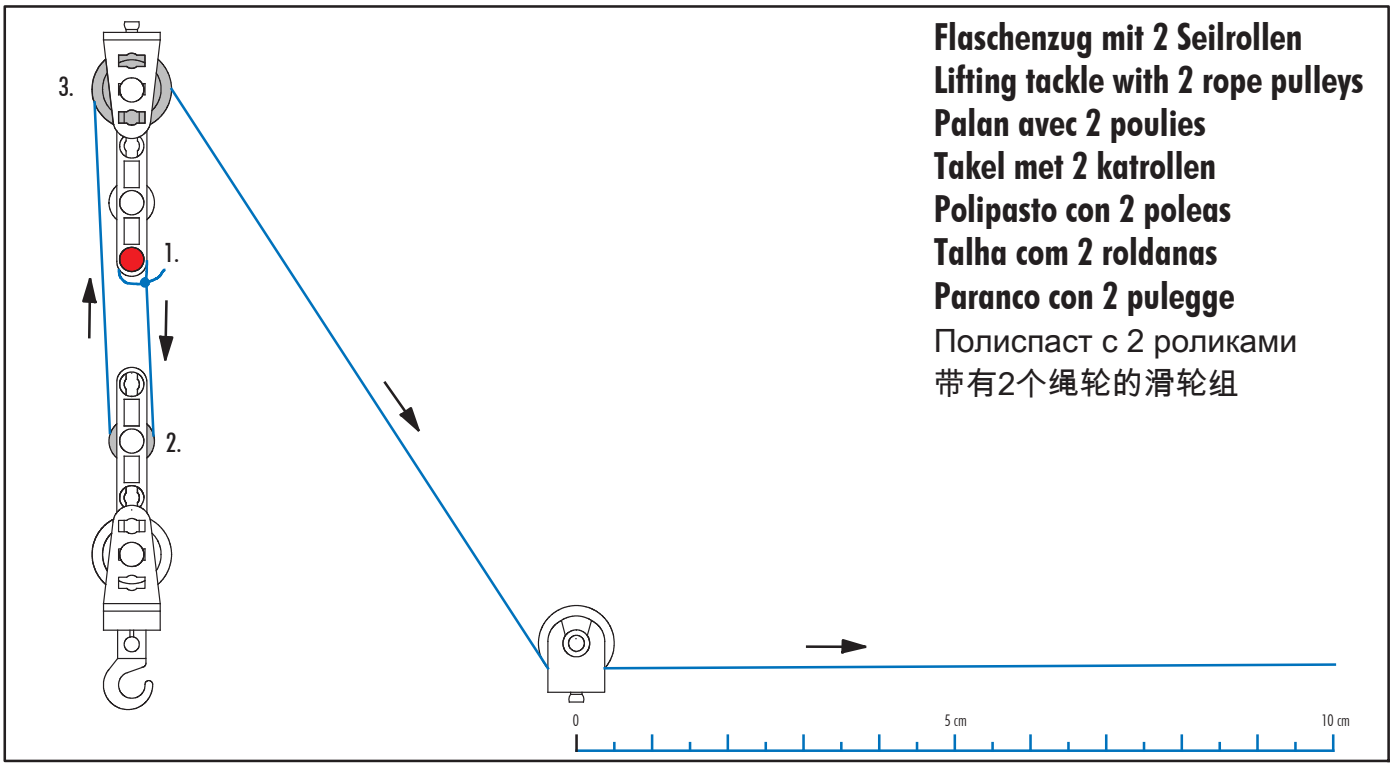

Flaschenzug mit 2 Seilrollen
Lifting tackle with 2 rope pulleys
Palan avec 2 poulies
Takel met 2 katrollen
Polipasto con 2 poleas
Talha com 2 roldanas
Paranco con 2 pulegge
Полиспаст с 2 роликами
带有2个绳轮的滑轮组

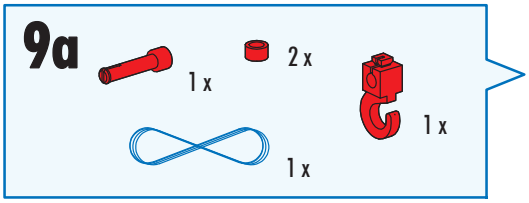

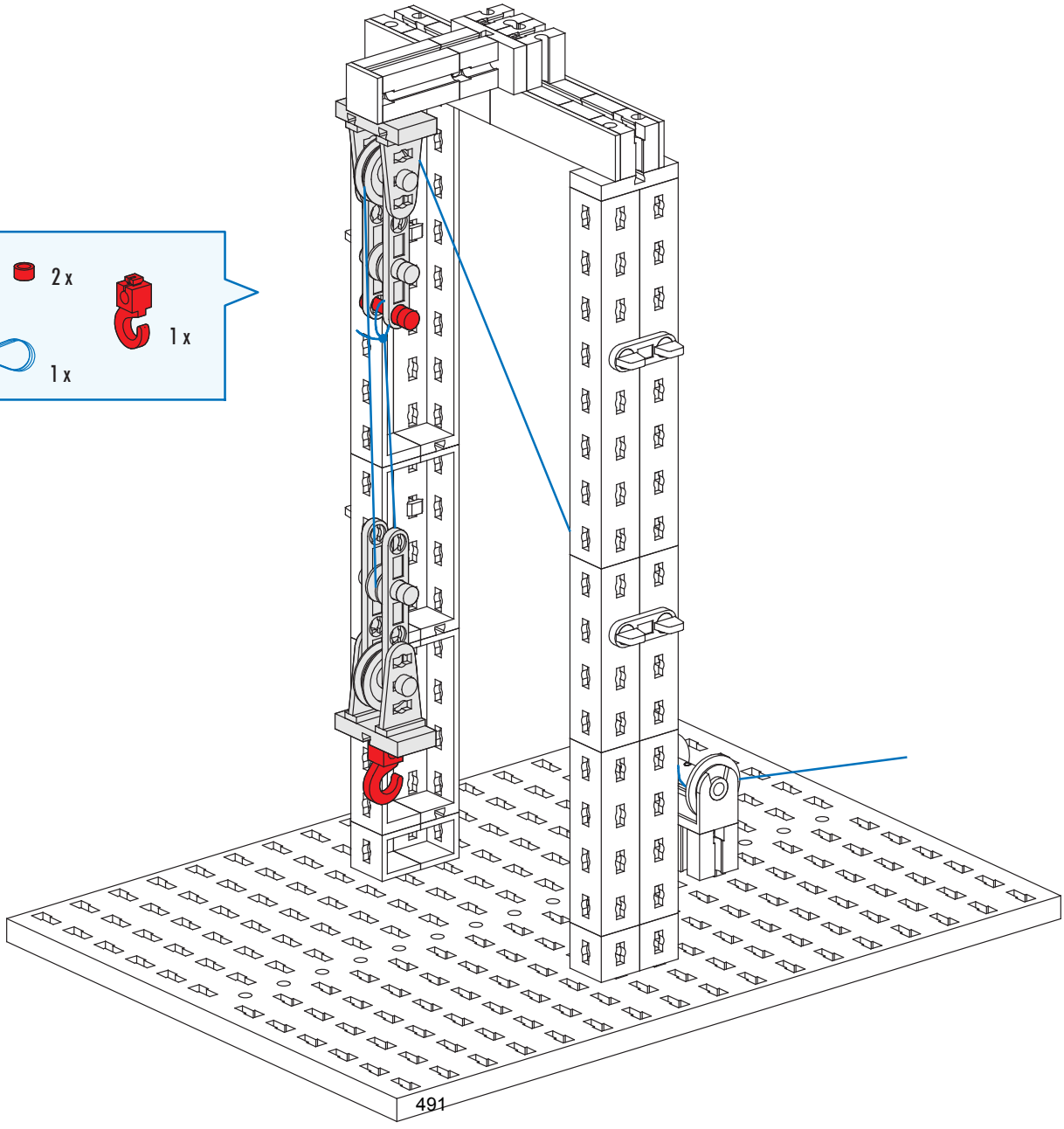

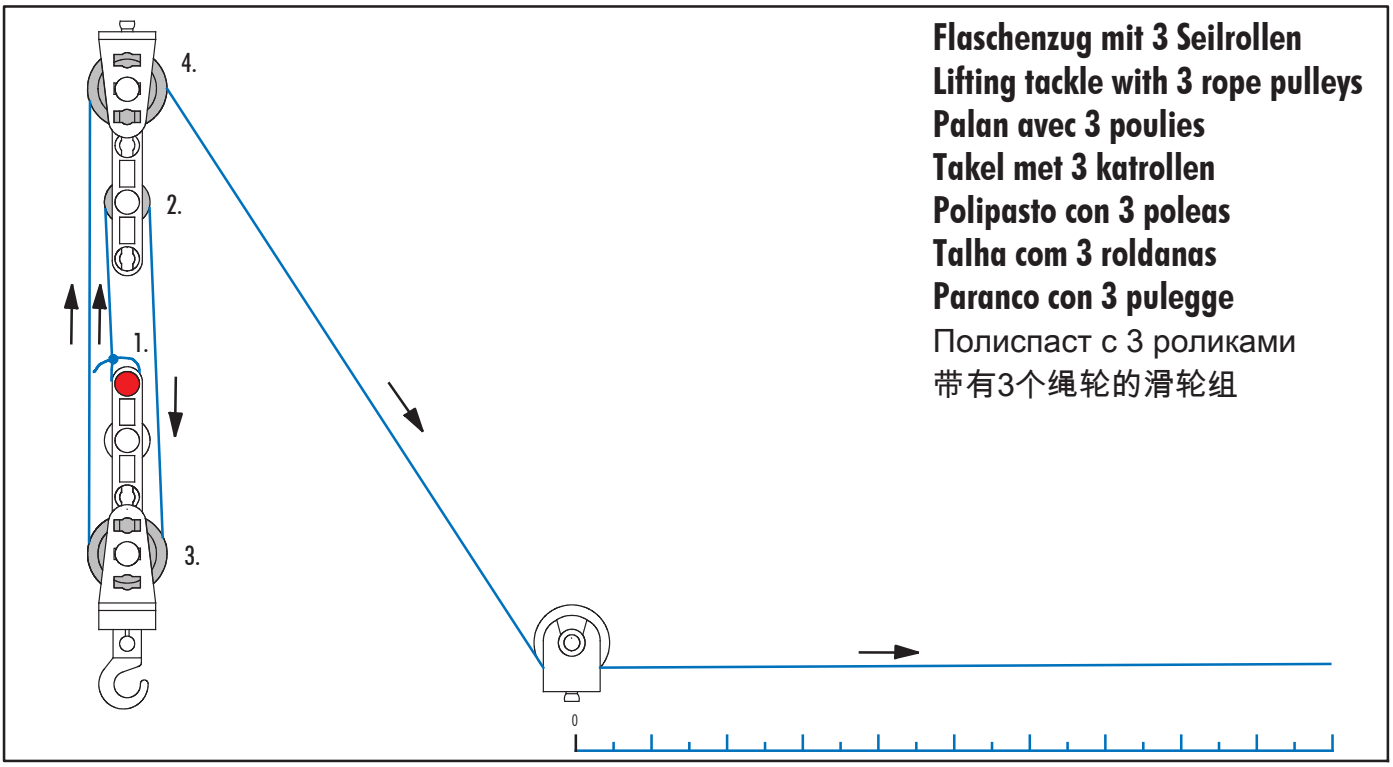

Flaschenzug mit 3 Seilrollen
Lifting tackle with 3 rope pulleys
Palan avec 3 poulies
Takel met 3 katrollen
Polipasto con 3 poleas
Talha com 3 roldanas
Paranco con 3 pulegge
Полиспаст с 3 роликами
带有3个绳轮的滑轮组

9a

umbauen
modify
modifier
veranderen
modificar
modificar
modificare
переделать
改装

9b

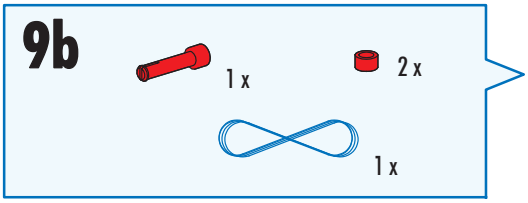

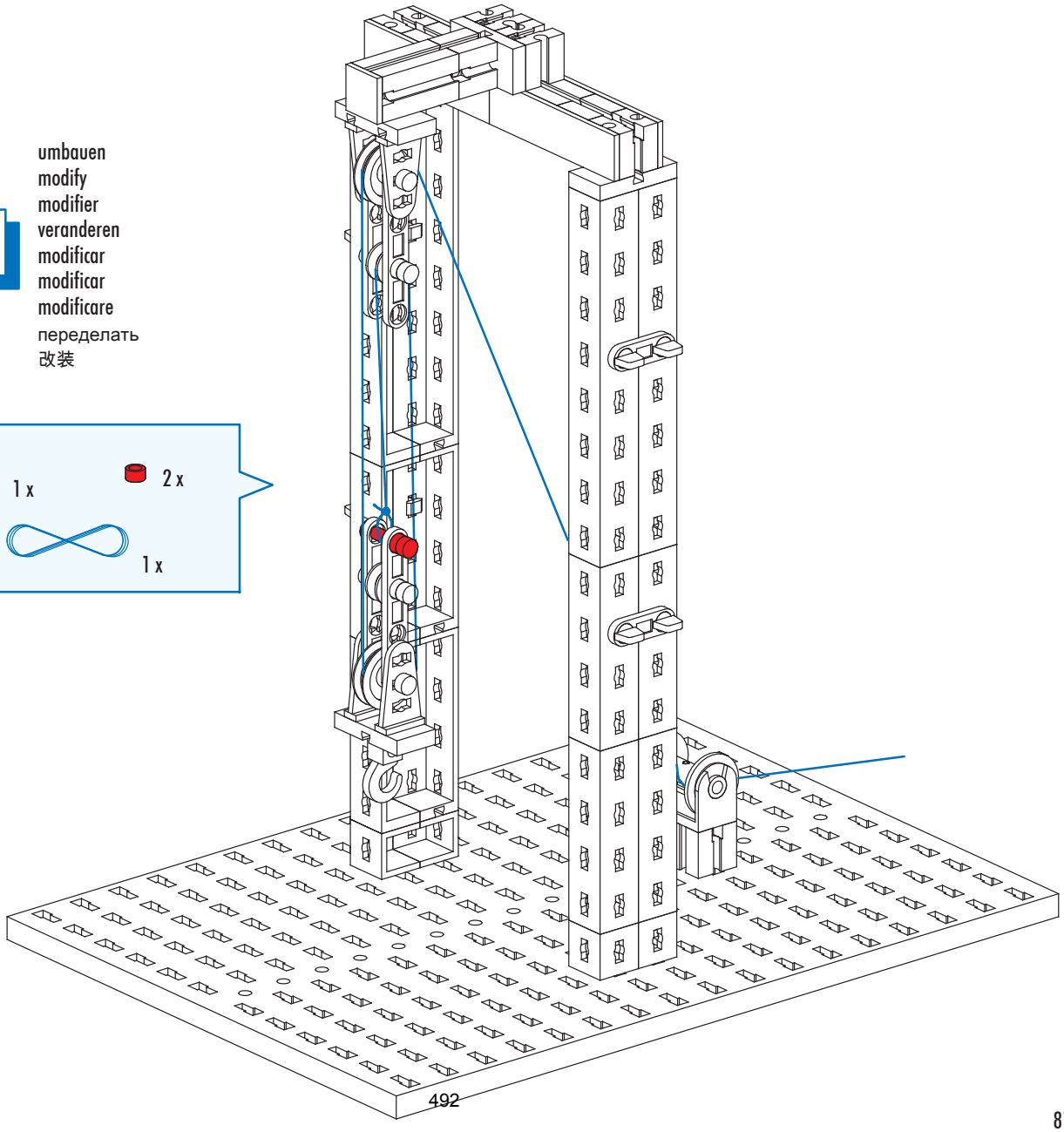

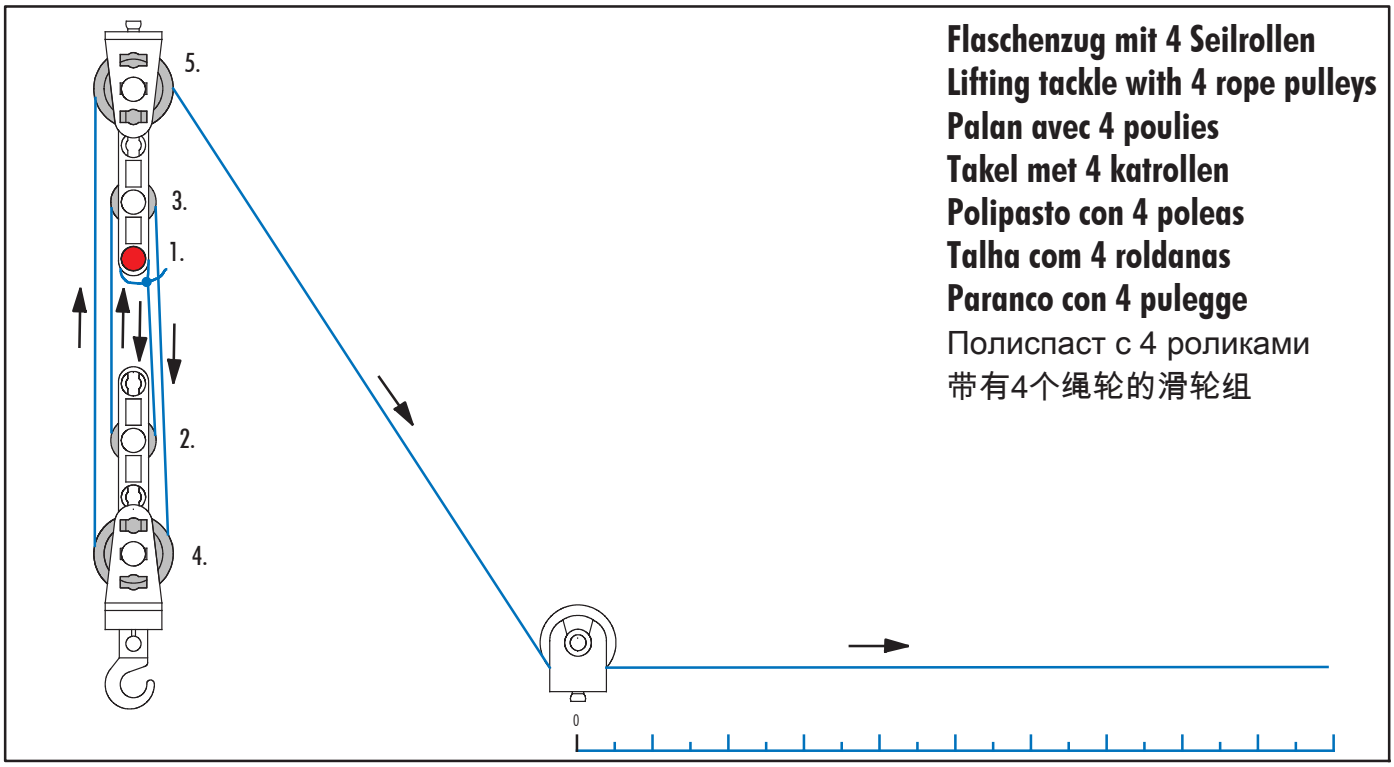

Flaschenzug mit 4 Seilrollen
Lifting tackle with 4 rope pulleys
Palan avec 4 poulies
Takel met 4 katrollen
Polipasto con 4 poleas
Talha com 4 roldanas
Paranco con 4 pulegge
Полиспаст с 4 роликами
带有4个绳轮的滑轮组

9b

umbauen
modify
modifier
veranderen
modificar
modificar
modificare
переделать
改装

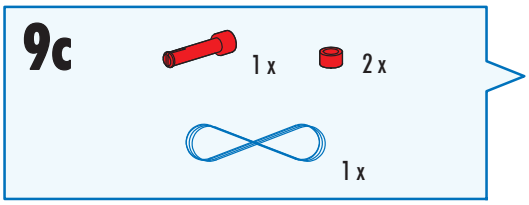

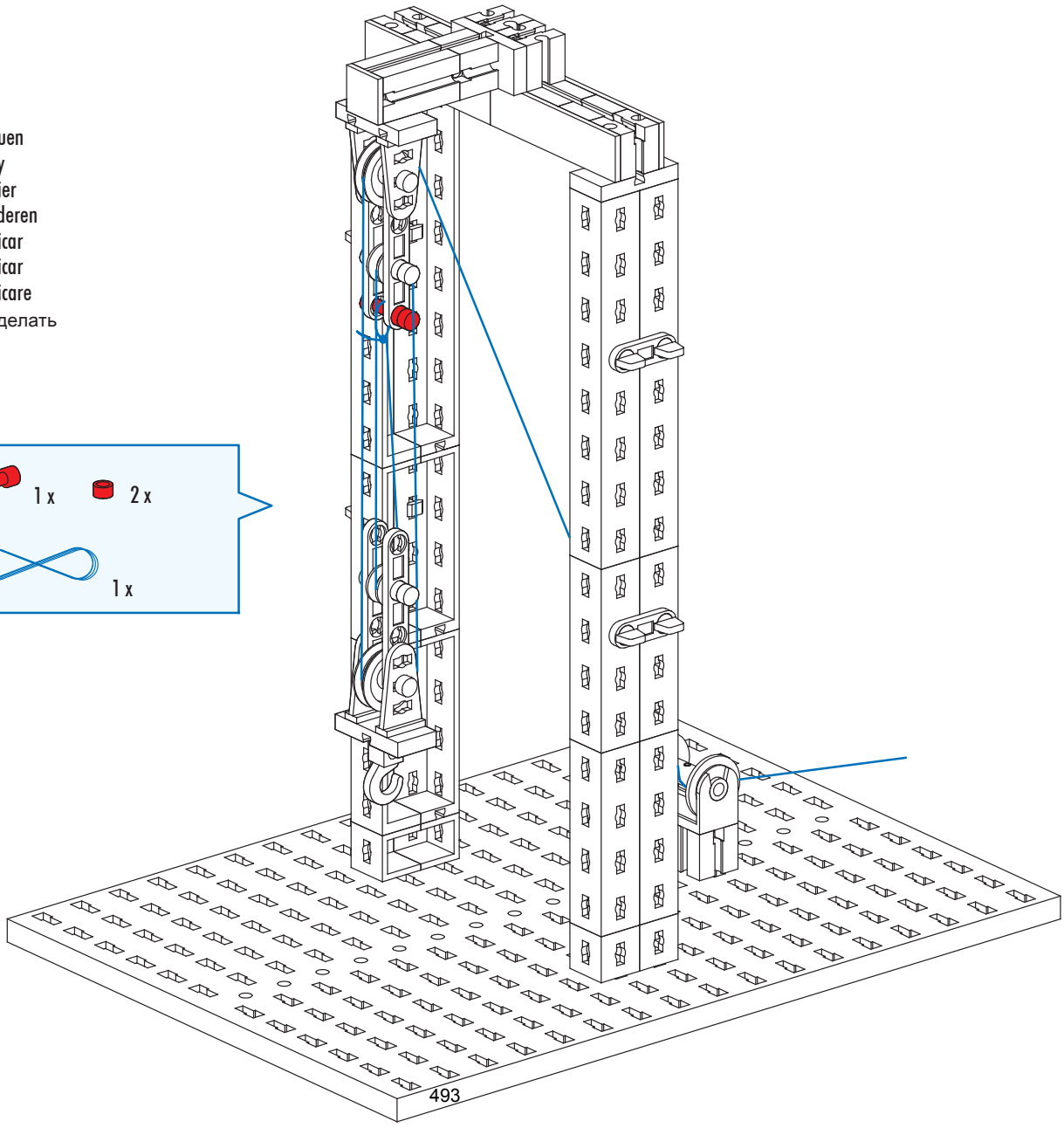

Motorisierung
Motor unit
Motorisation

Motorisering
Motorización
Motorização

Motorizzazione
Моторизация
机动化

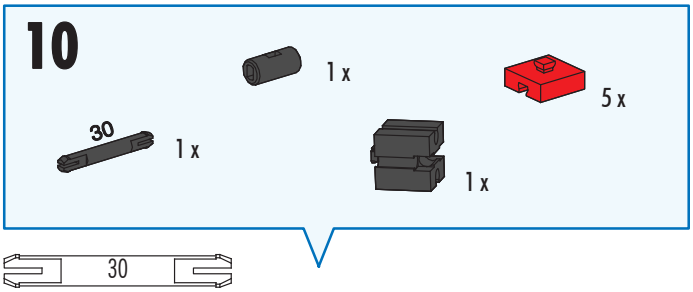

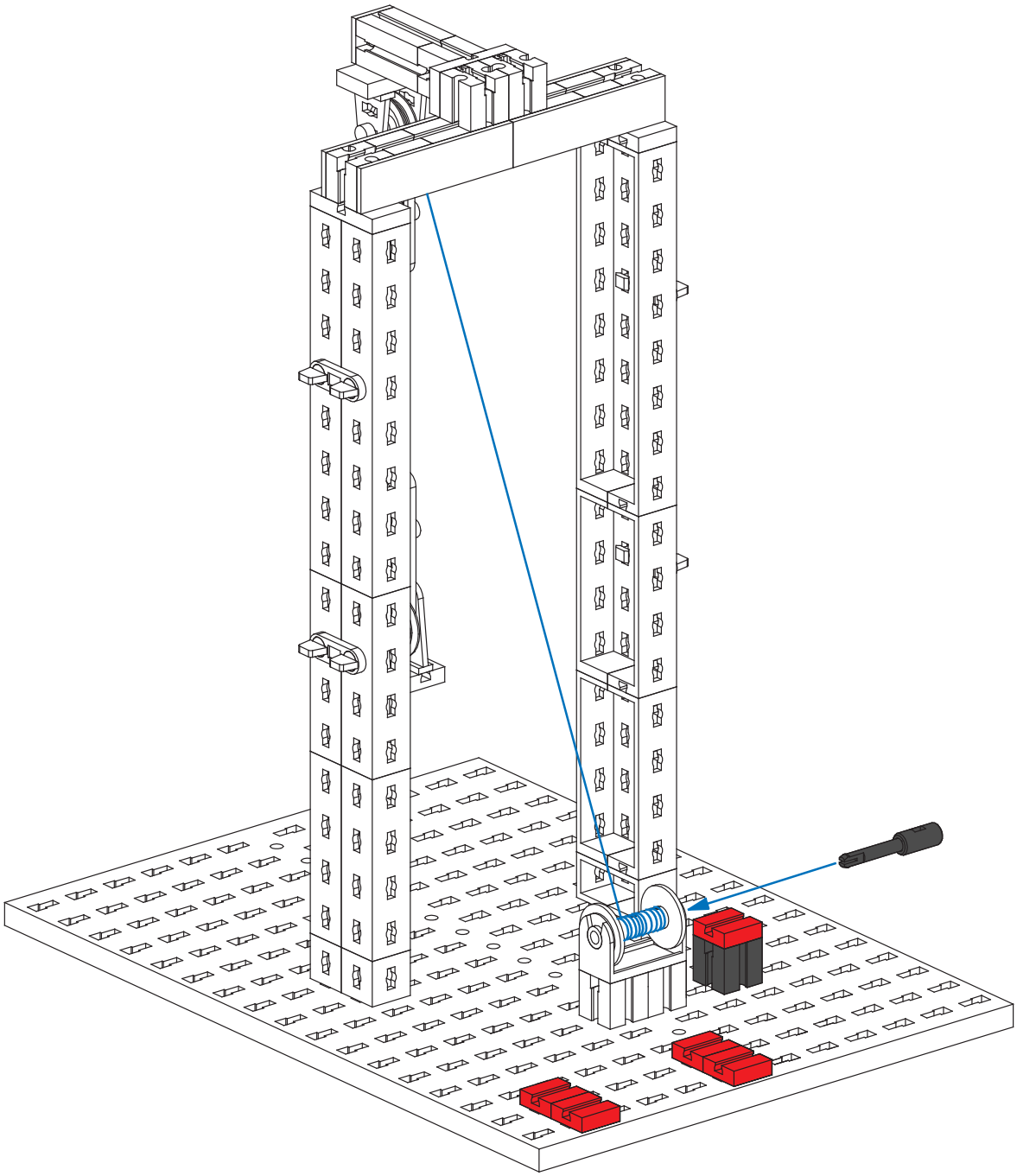

11

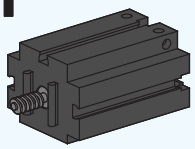
1 x

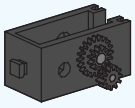
1 x

1 x

4 x

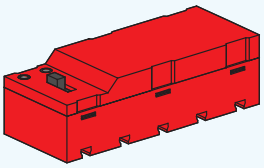
1 x

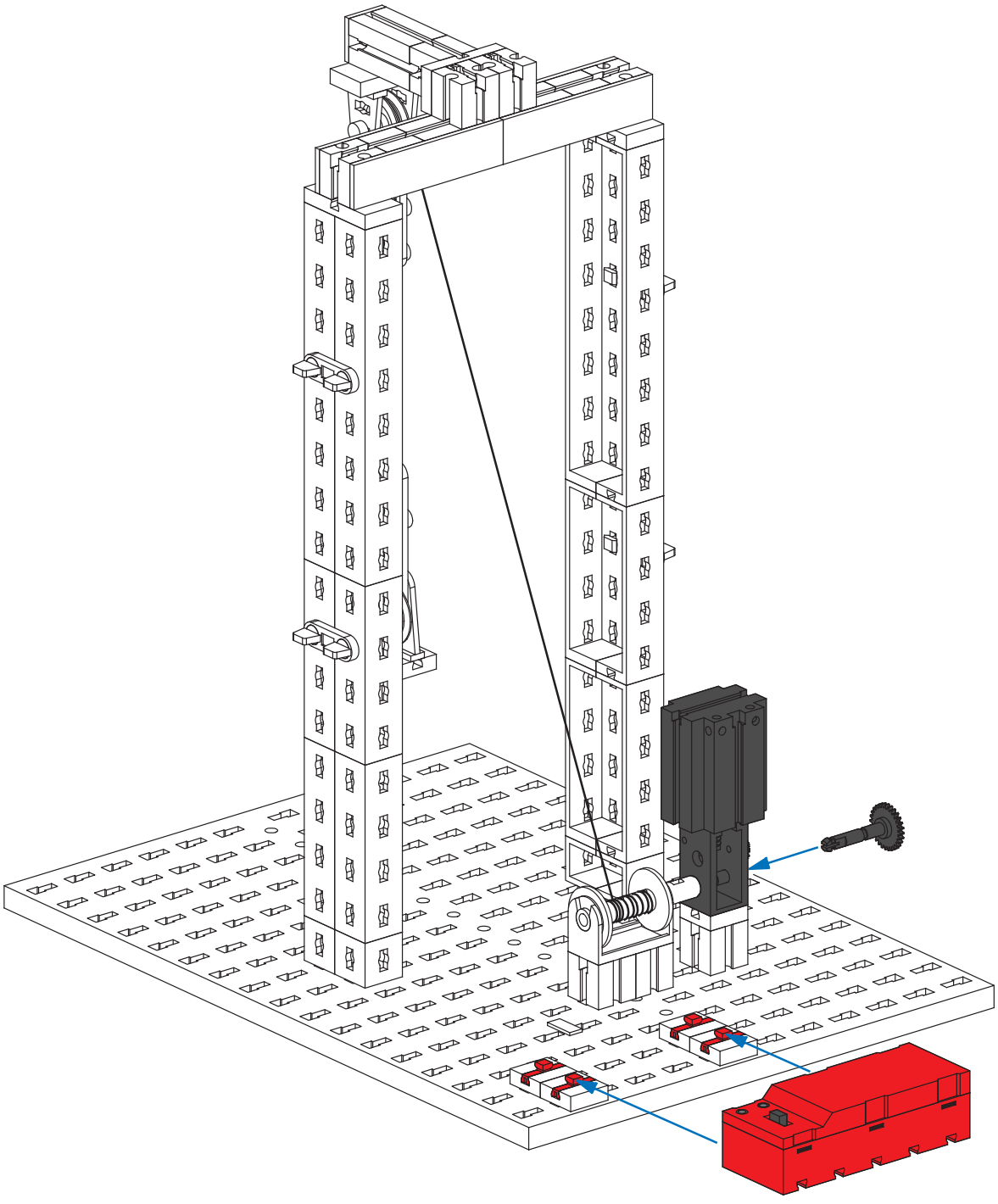

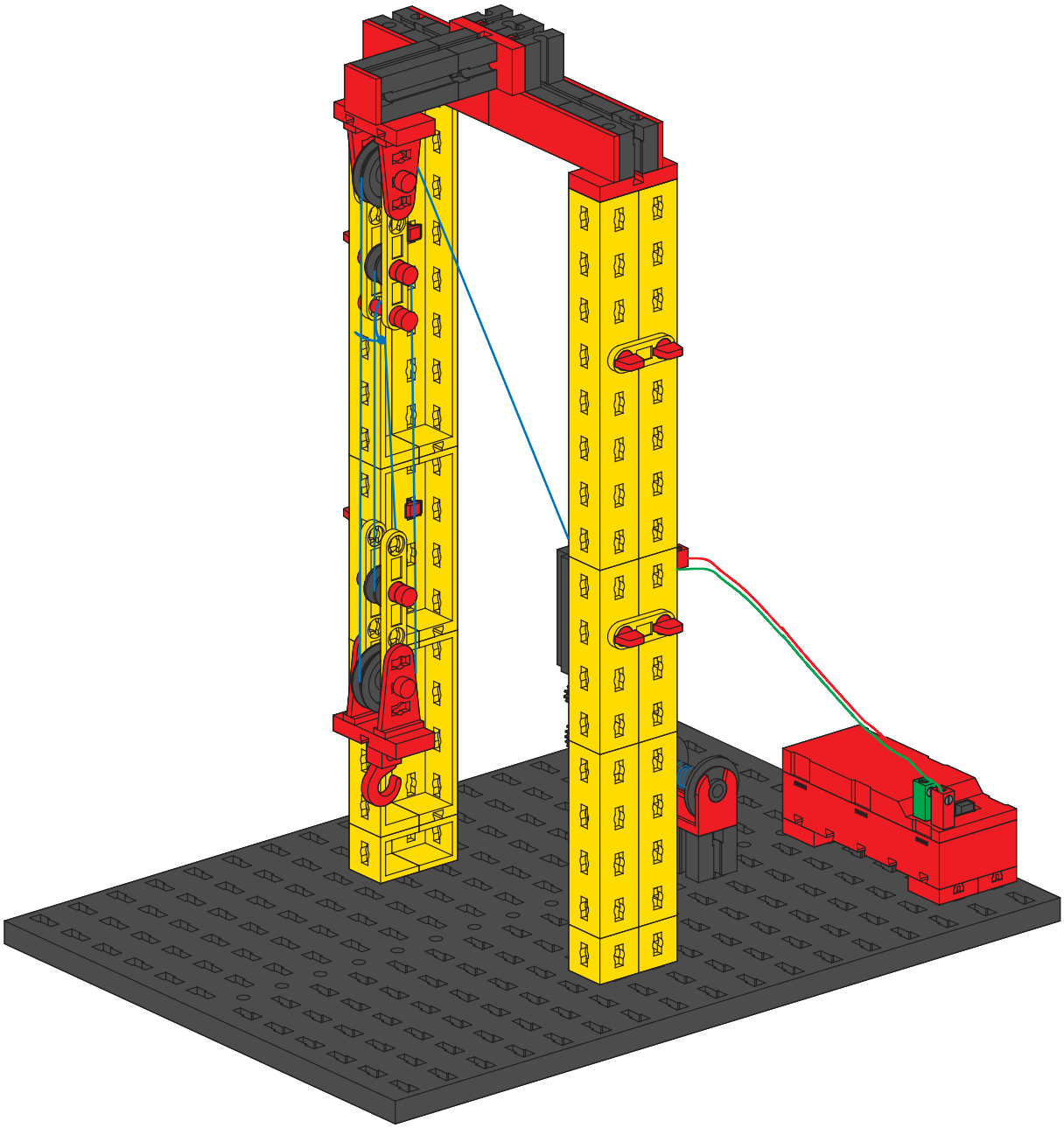

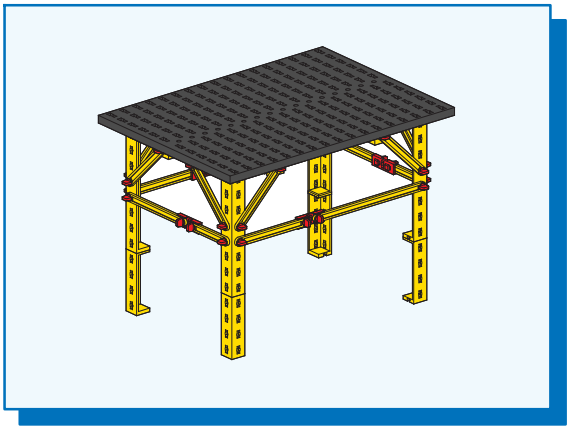

Tisch
Table
Table

Tafel
Mesa
Mesa

Tavola
Стол
工作台

1

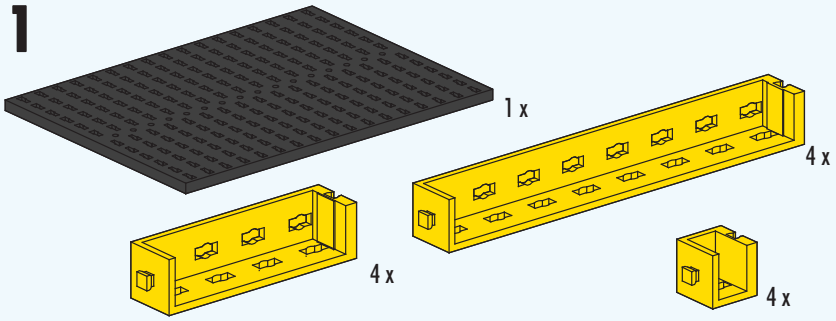

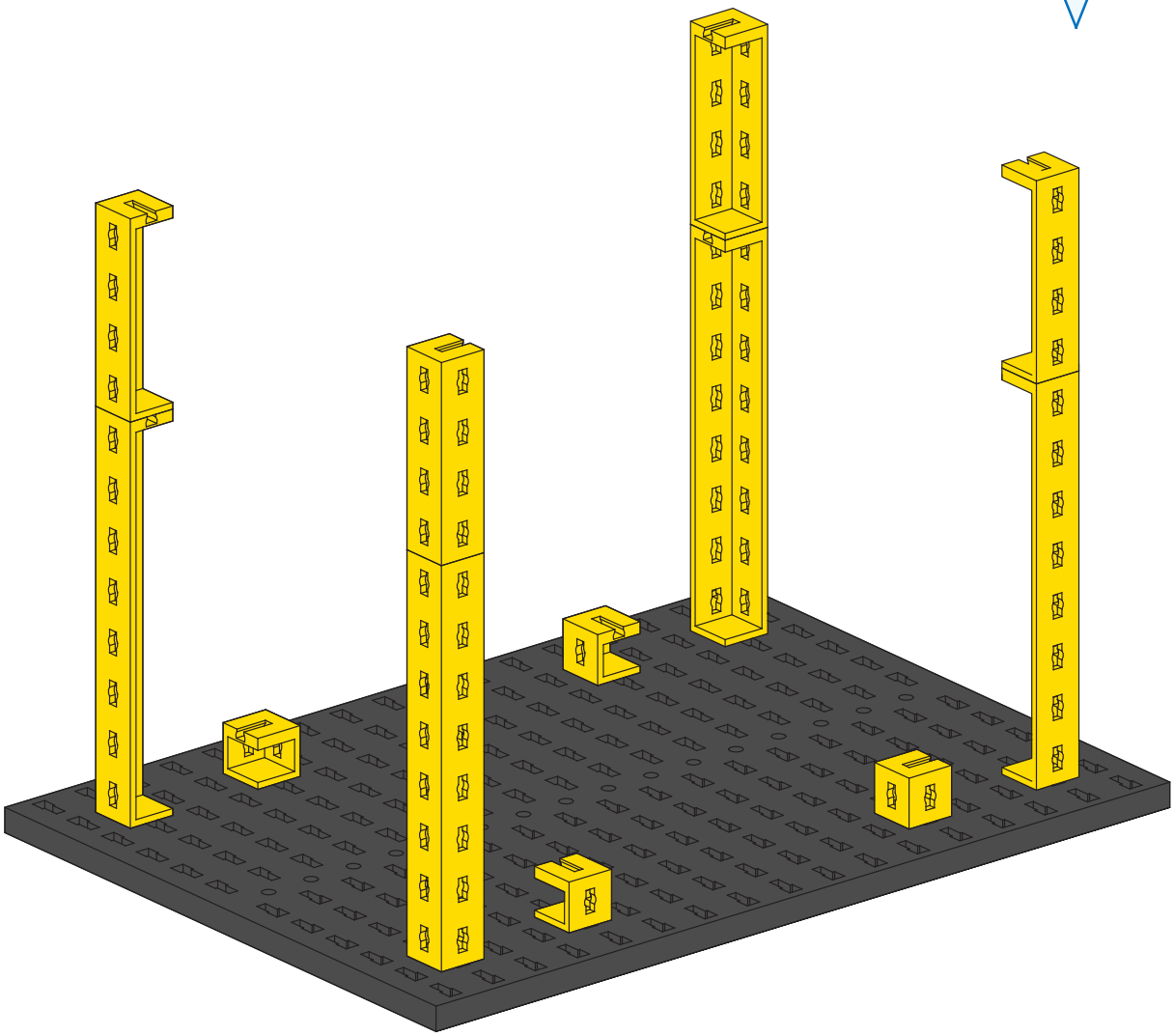

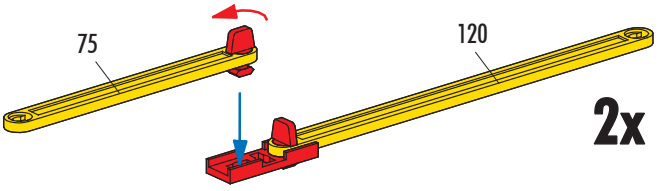

2

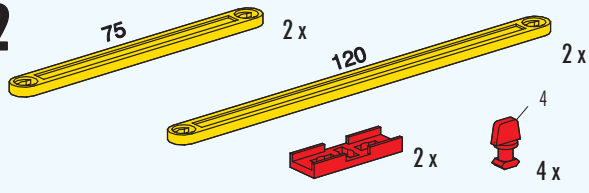

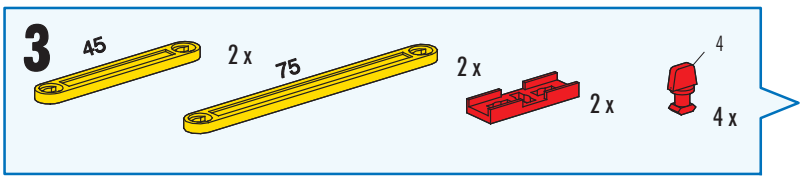

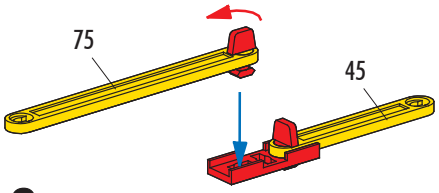

2x

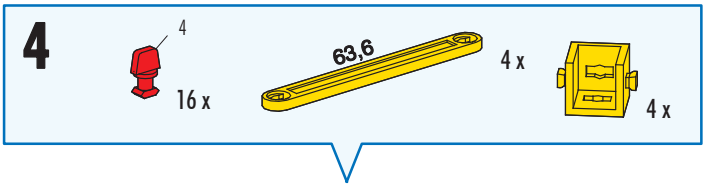

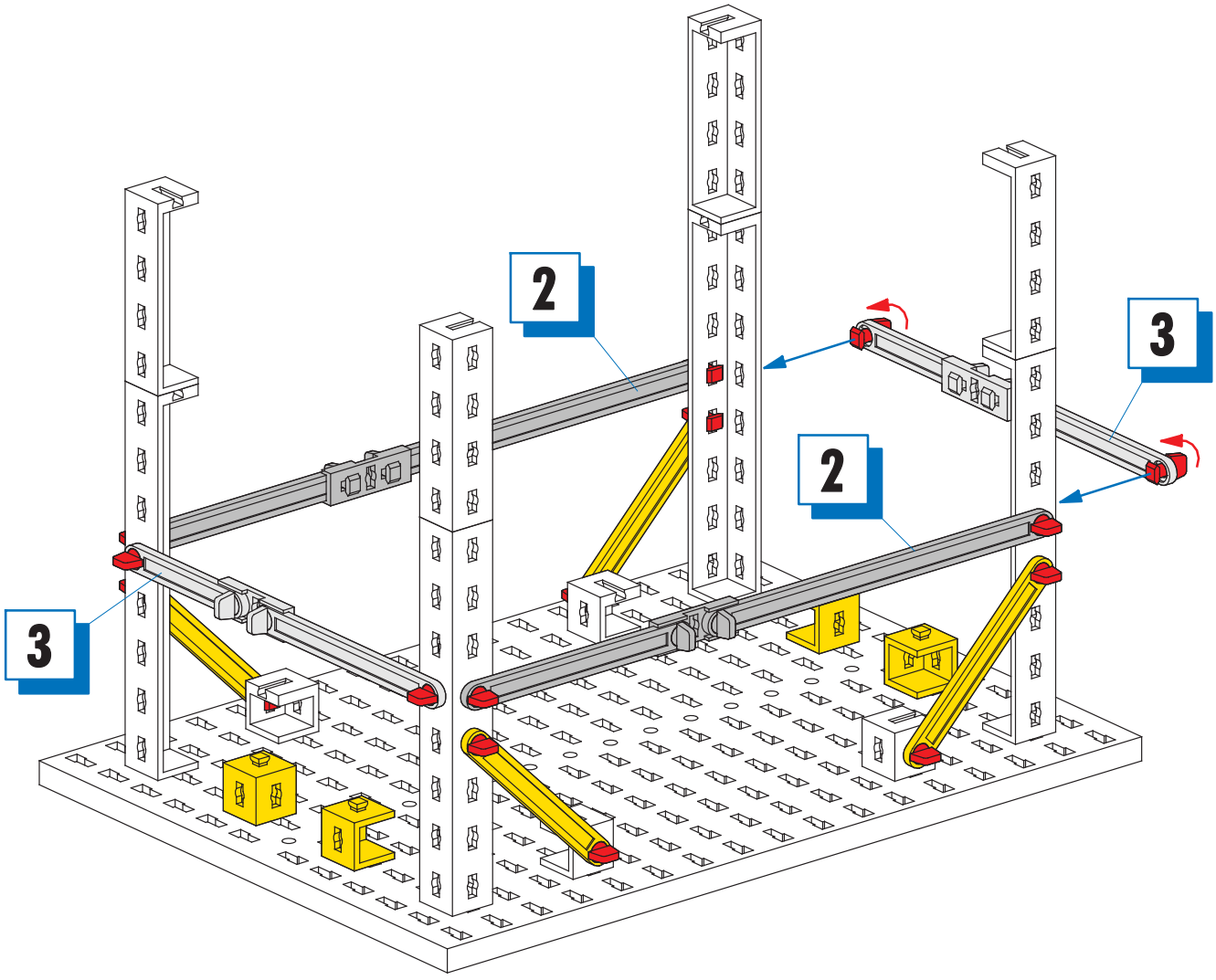

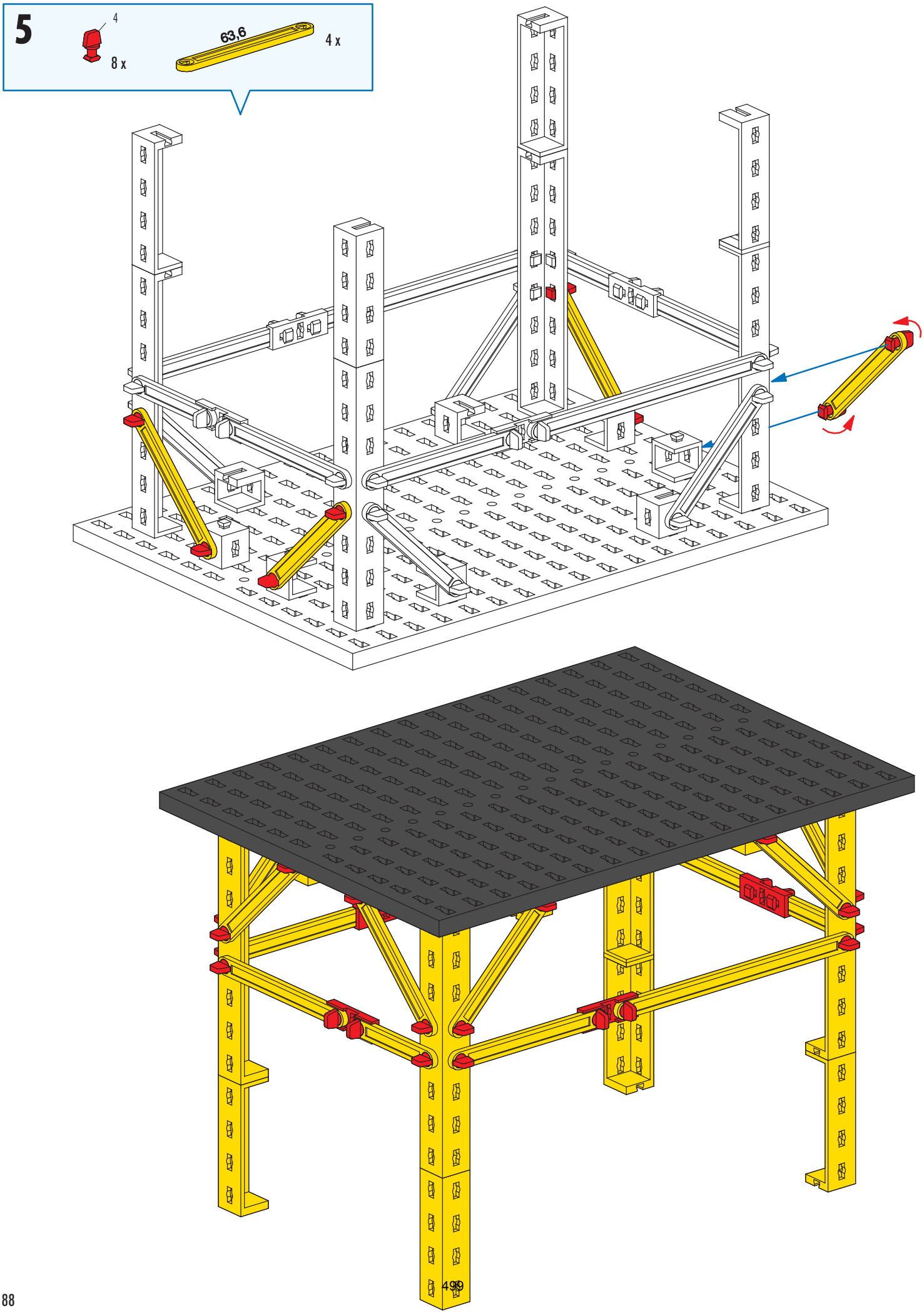
5
4
8 x
63,6
4 x
499

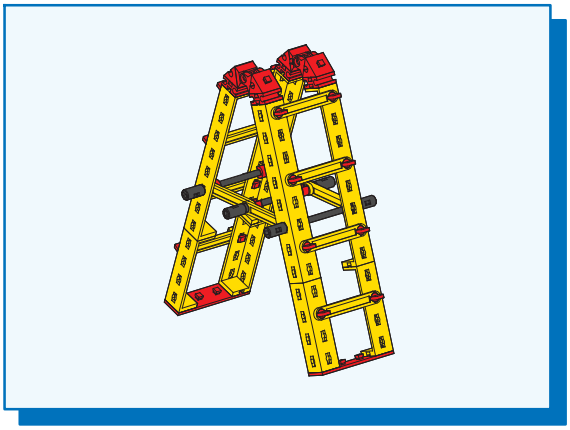

Bockleiter
Double ladder
Echelle double

Trapladder
Escalera de tijera
Escada de cavalete

Scala a libro
Стремянка
人字梯

1

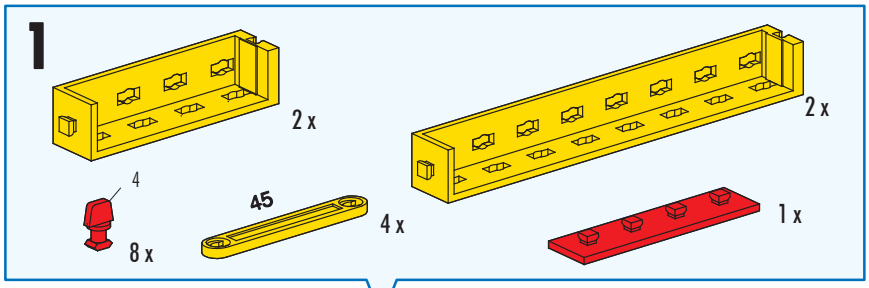

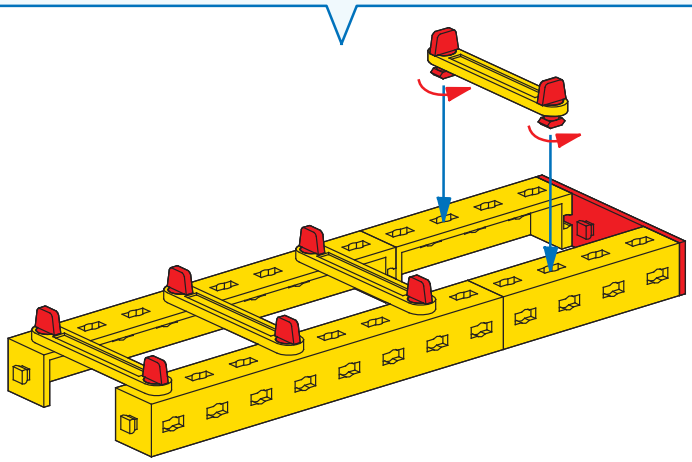

2

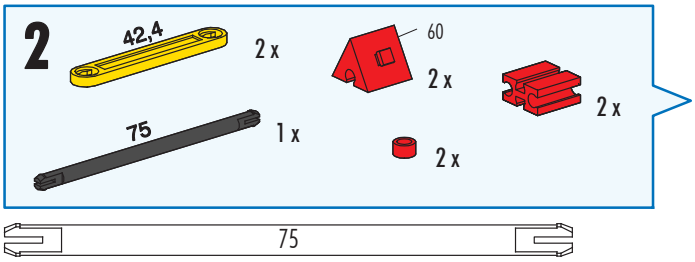

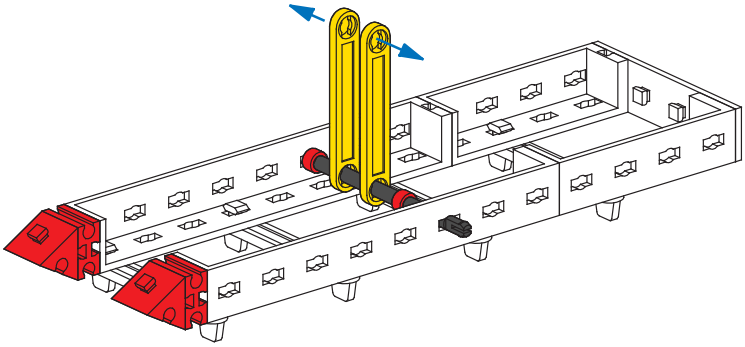

3

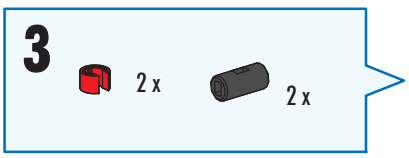

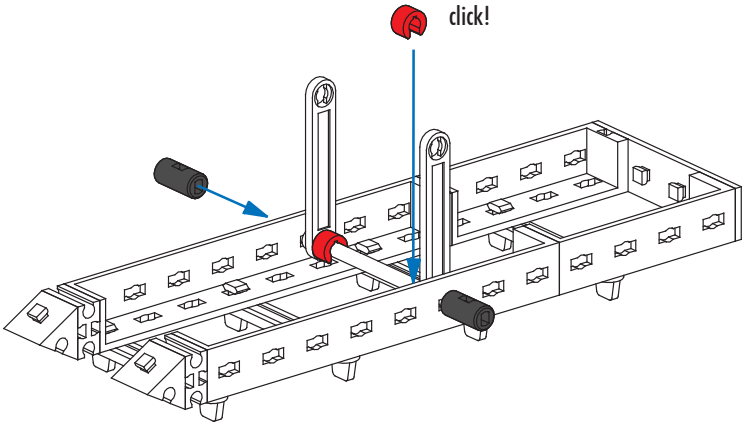

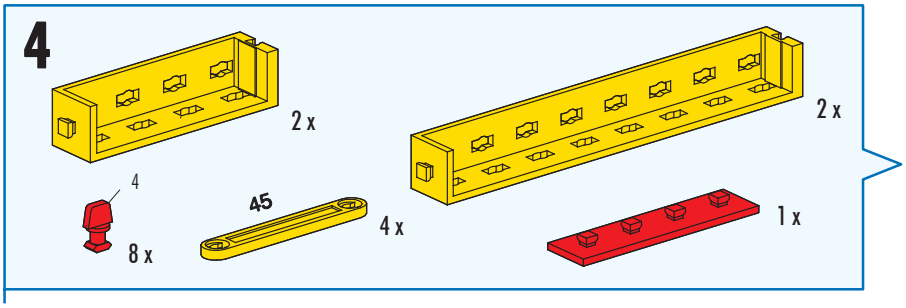
4
2 x
2 x
4
8 x
45
4 x
1 x

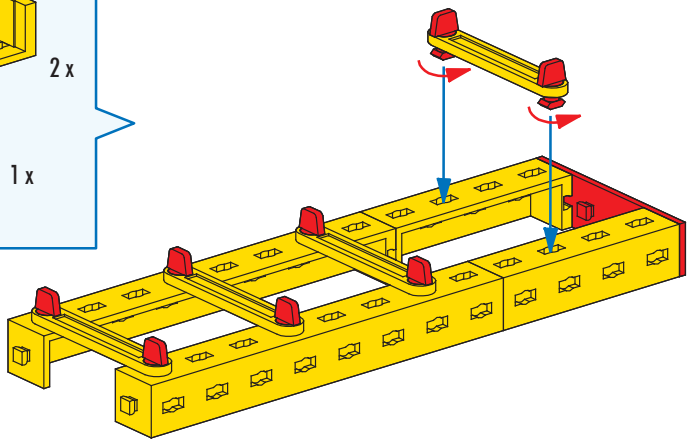

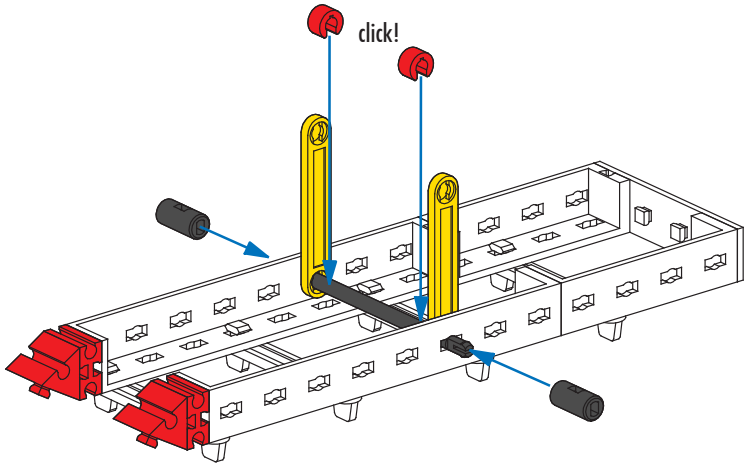
click!

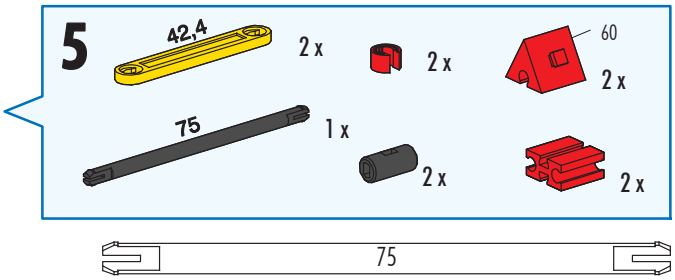
5
42,4
2 x
2 x
60
2 x
75
1 x
2 x
2 x
75

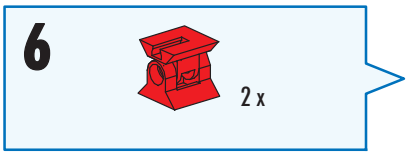
6
2 x

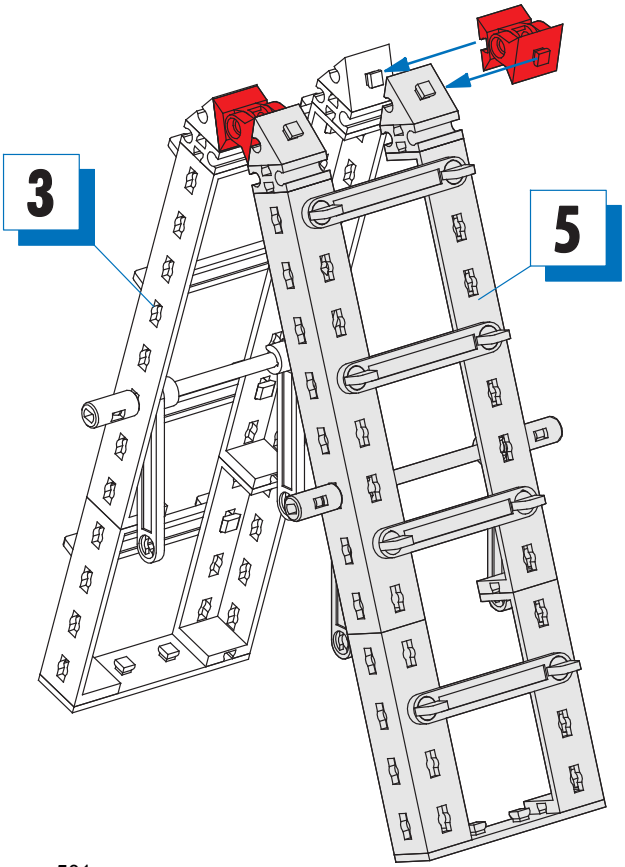
3
5

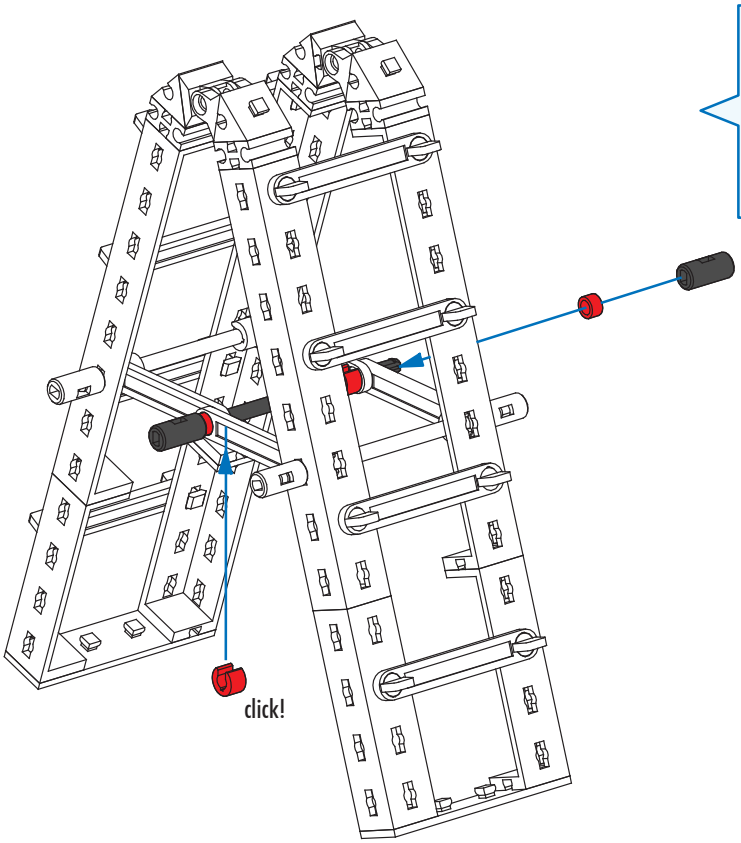
click!

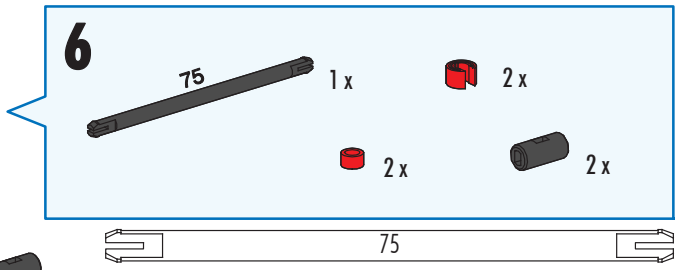
6
75
1 x
2 x
2 x
2 x
75

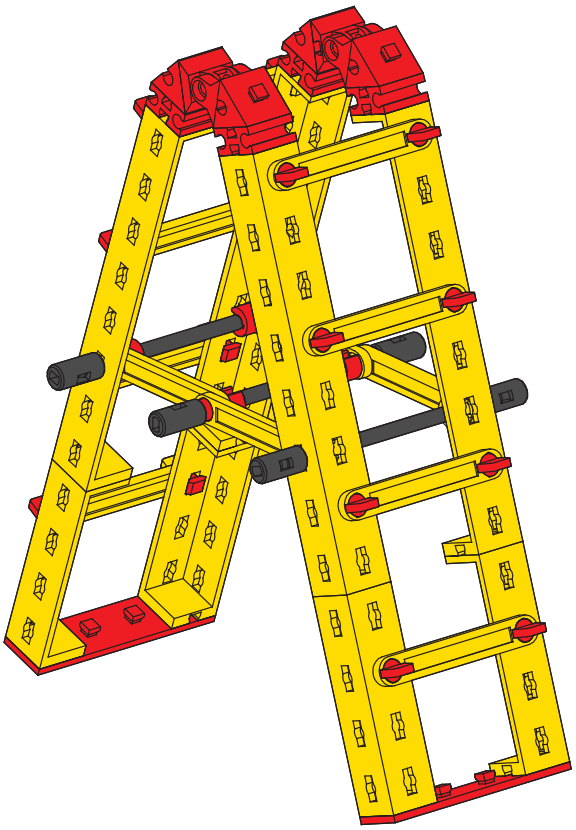

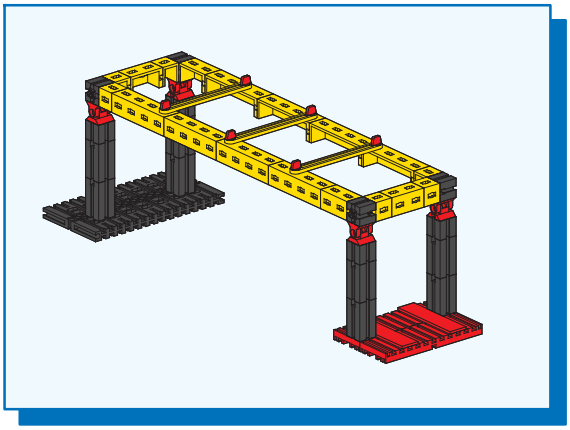

Balkenbrücke
Girder Bridge
Pont à poutres droites

Balkenbrug
Puente de vigas
Ponte de travessa

Ponte a trave
Балочный мост
梁式桥

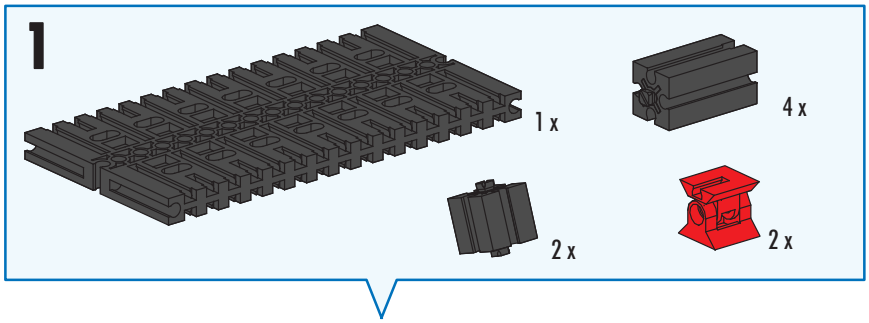

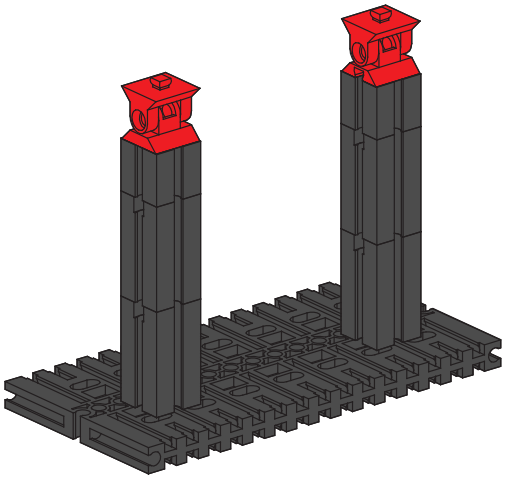

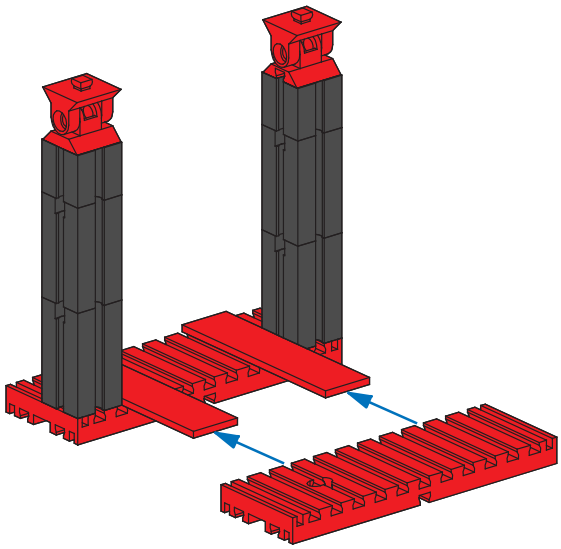

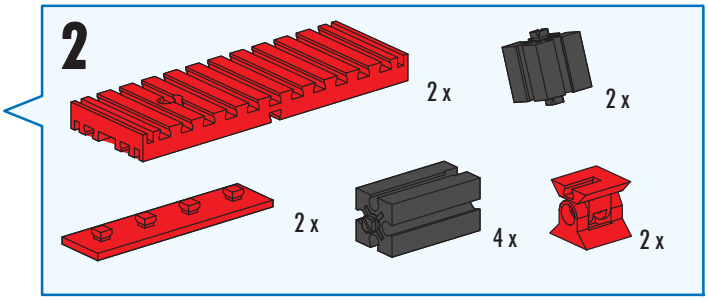

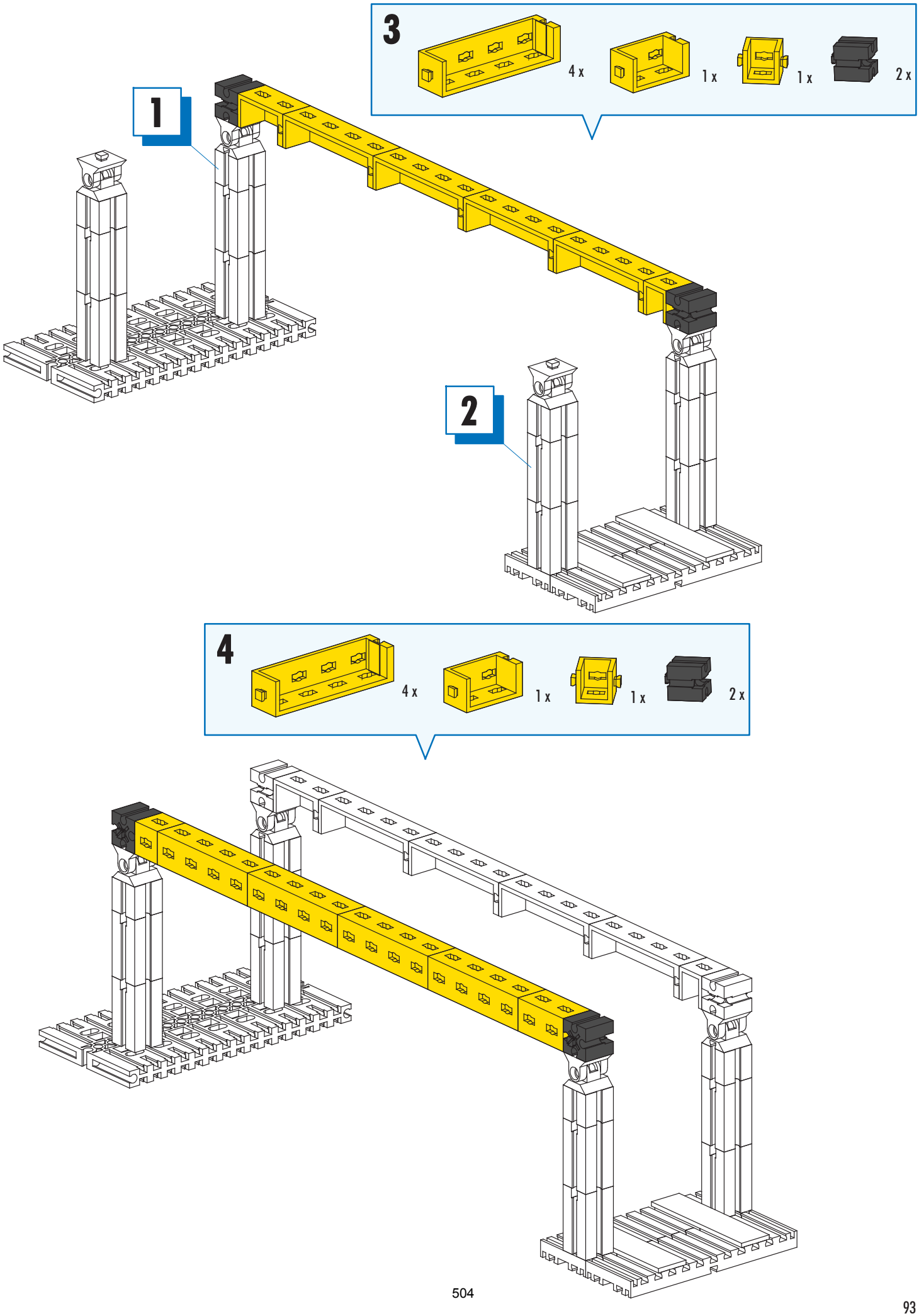
3
4 x
1 x
1 x
2 x
1
2
4
4 x
1 x
1 x
2 x

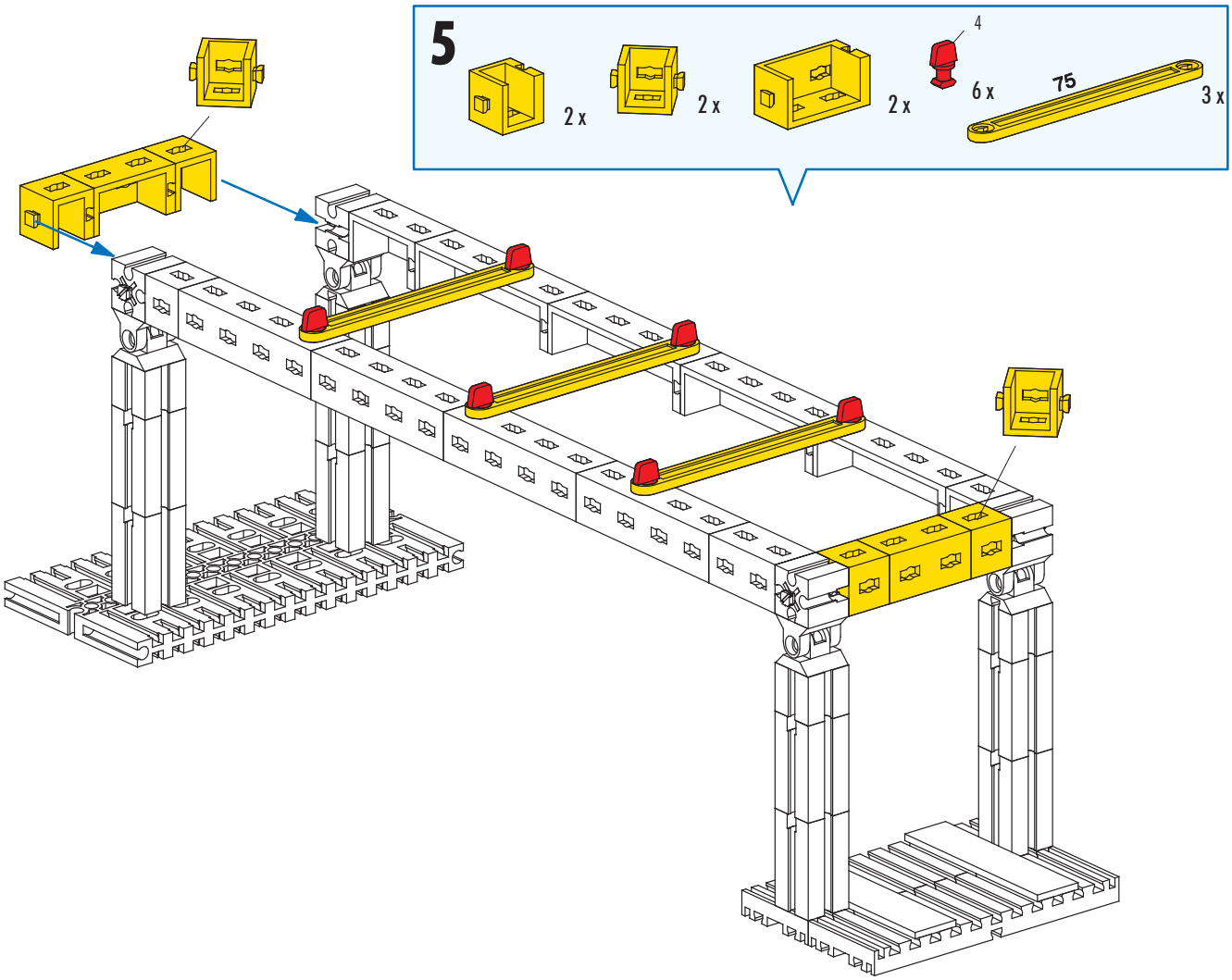
5
2 x
2 x
2 x
4
6 x
75
3 x

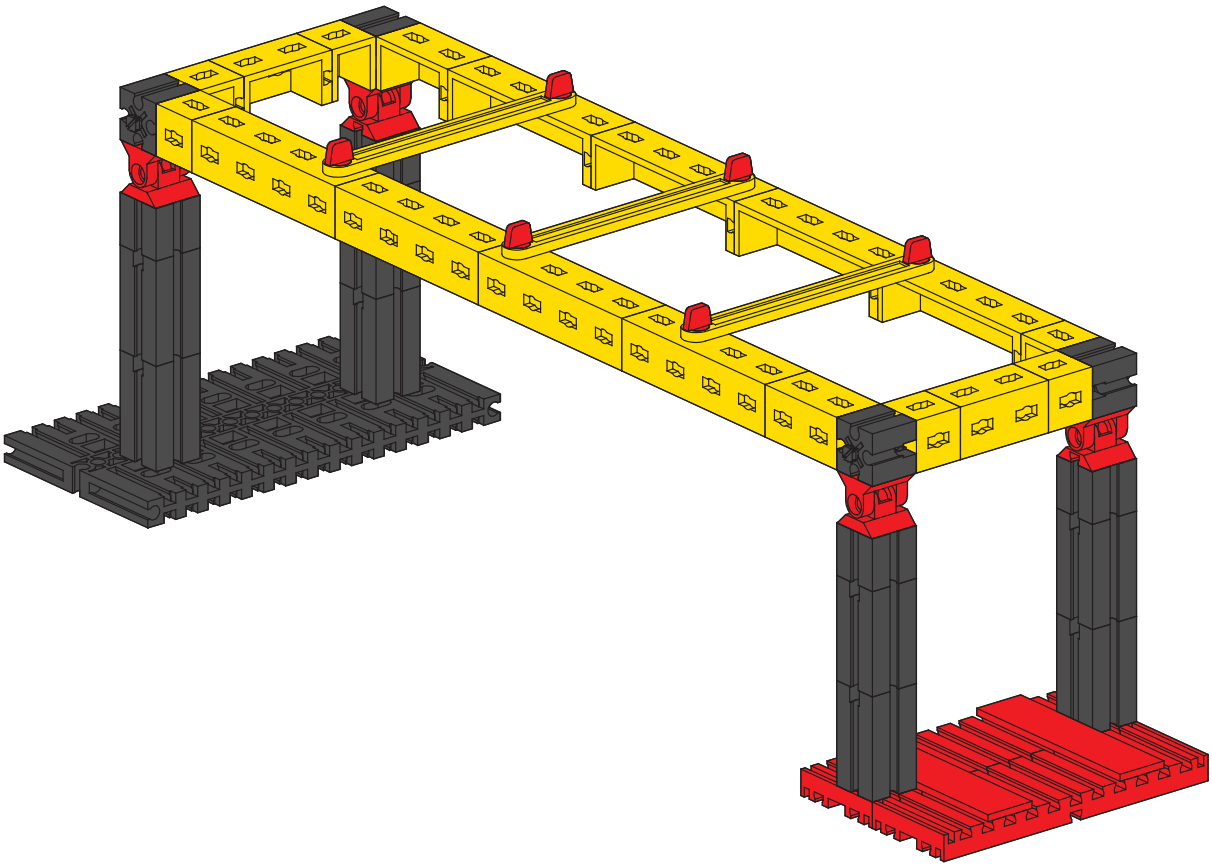

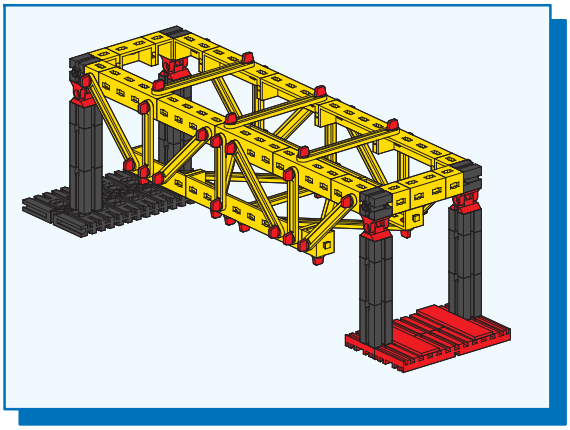

Brücke mit Unterzug
Bridge with Underbeam
Pont avec solive transversale
Brug met onderslagbalken
Puente con viga maestra
Ponte com viga de sustentação inferior
Ponte con trave inferiore
Мост с нижней рамой
带下托梁的桥

1- 5

Seite 92
Page 92
Page 92
Bladzijde 92
Página 92
Pagina 92
Pagina 92
Страница 92
页次 92

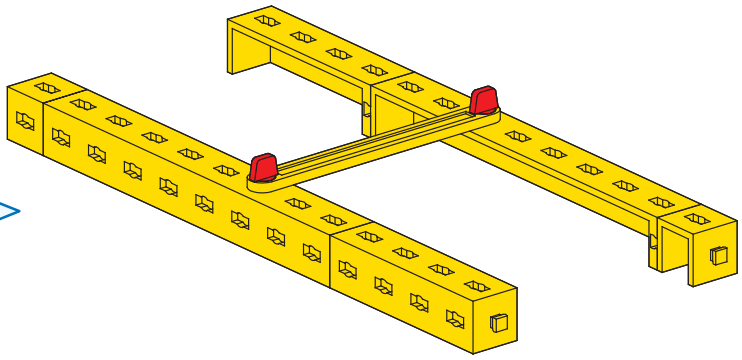

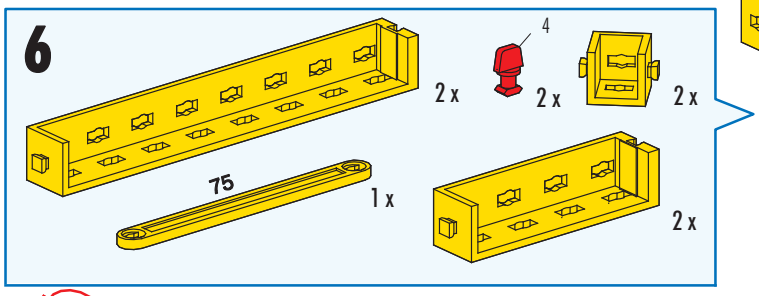

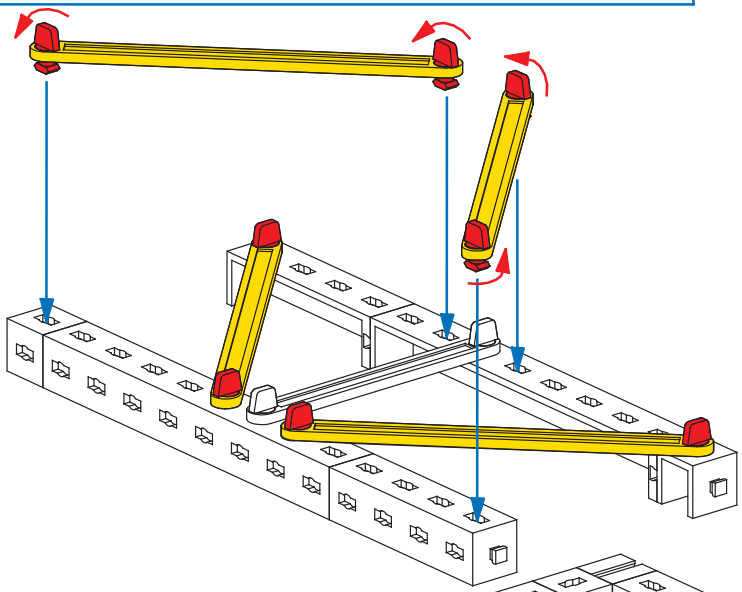

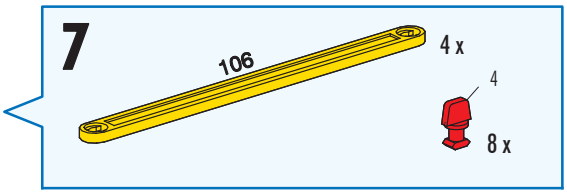

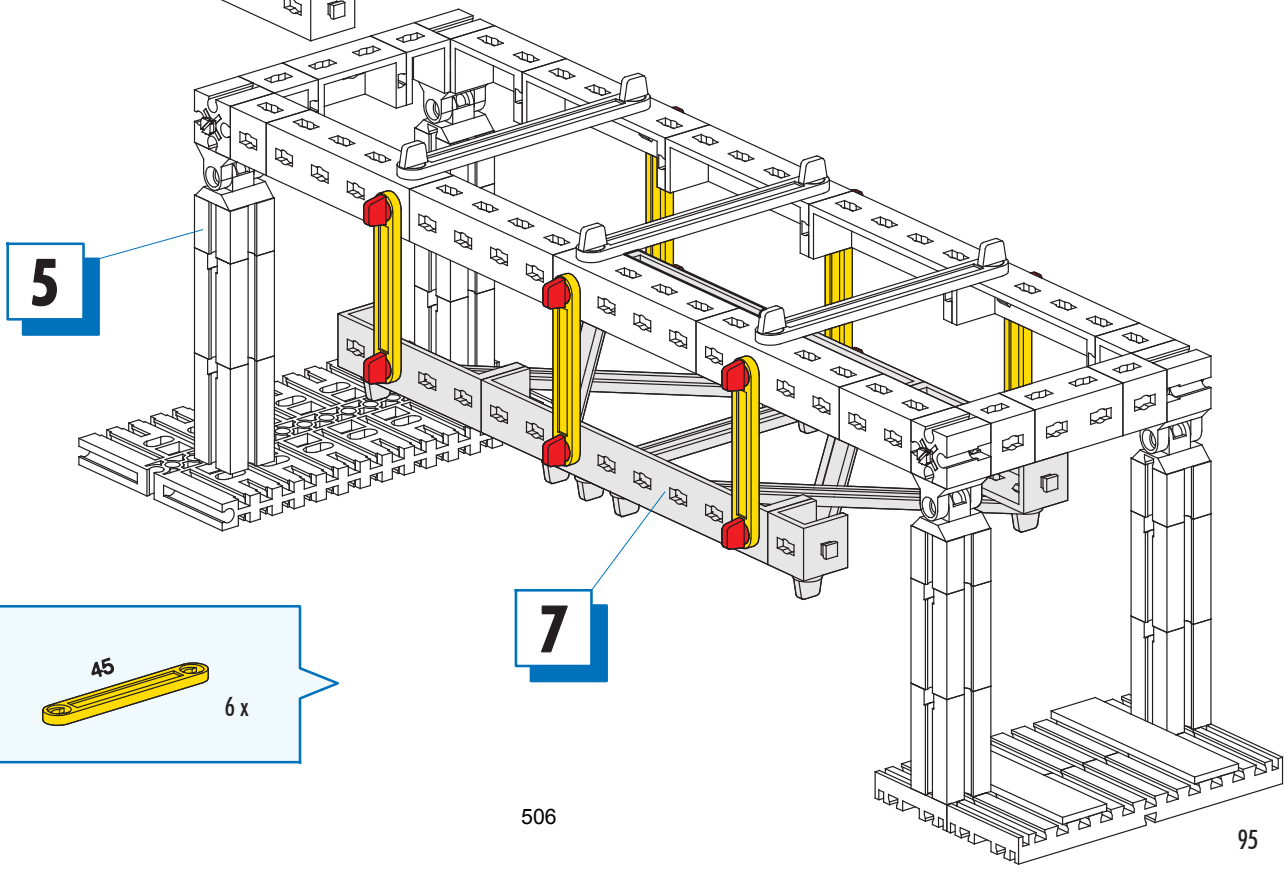

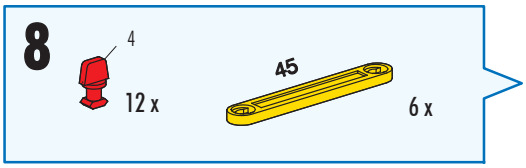

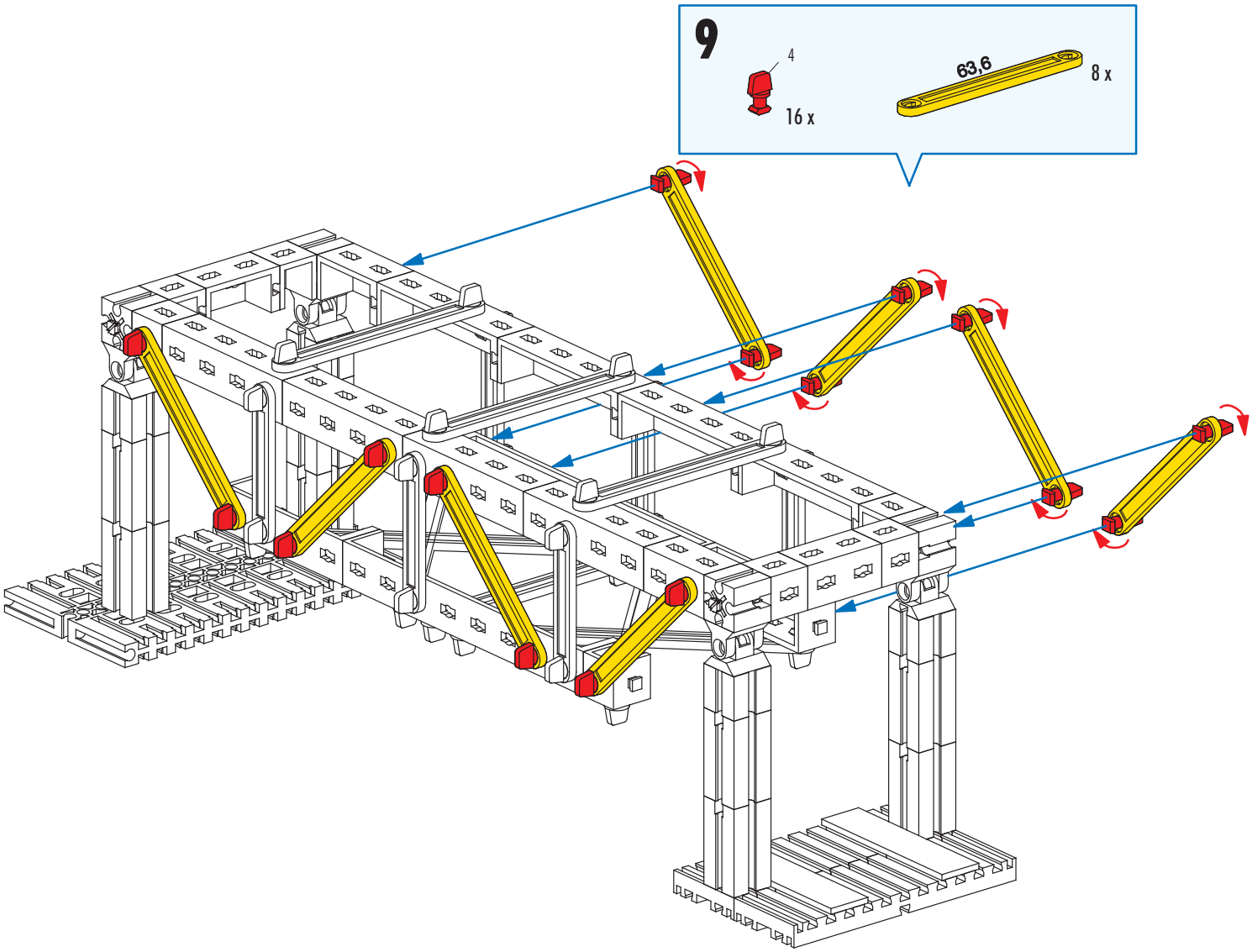
9
4
16 x
63,6
8 x

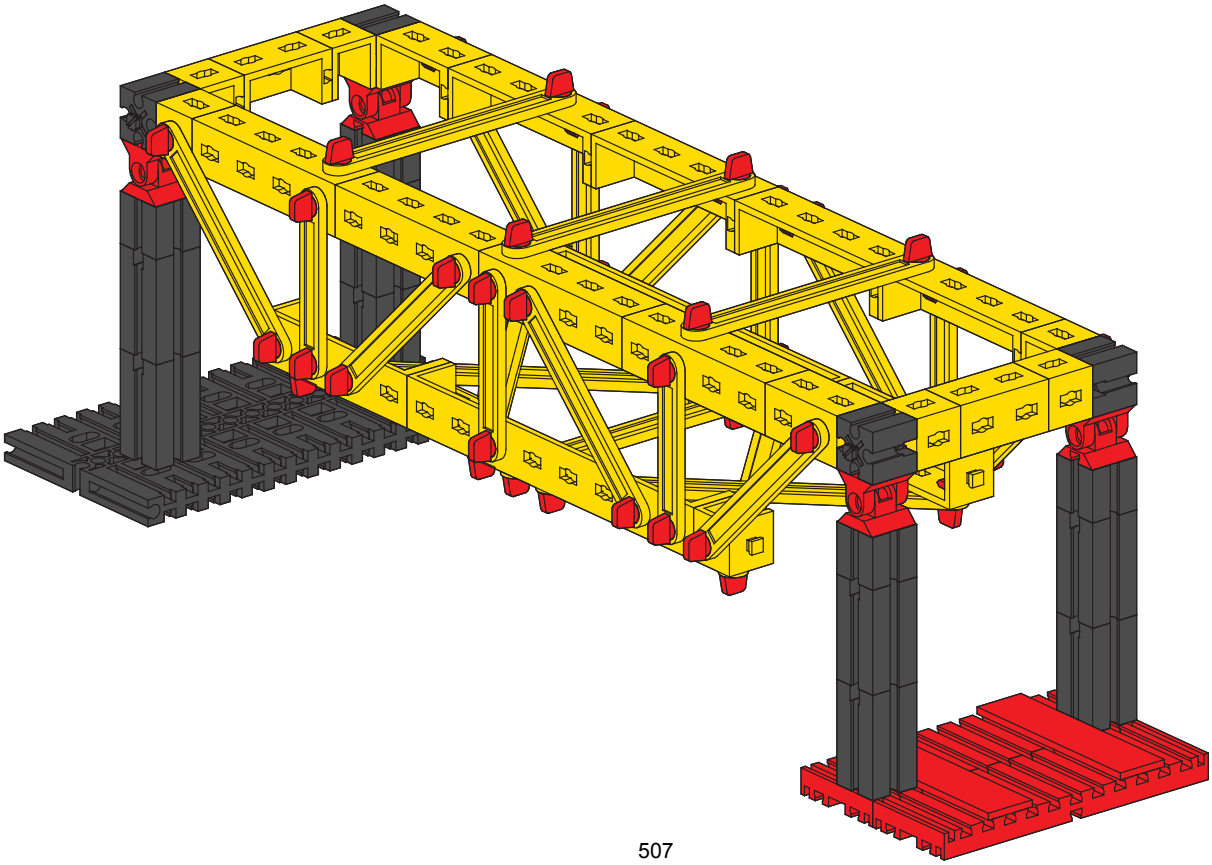

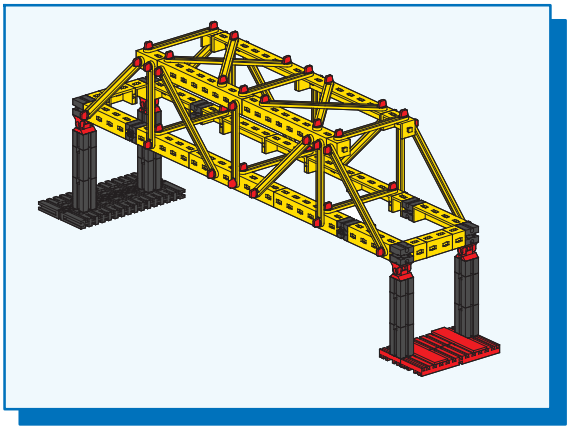

Brücke mit Oberzug
Bridge with Upperbeam
Pont à membrure supérieure transversale

Brug met bovenslagbalken
Puente con viga testera
Ponte com viga de sustentação superior

Ponte con trave superiore
Мост с верхней рамой
带上托梁的桥

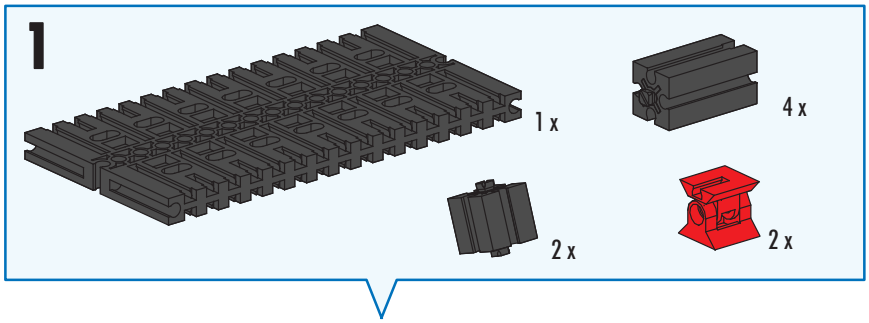

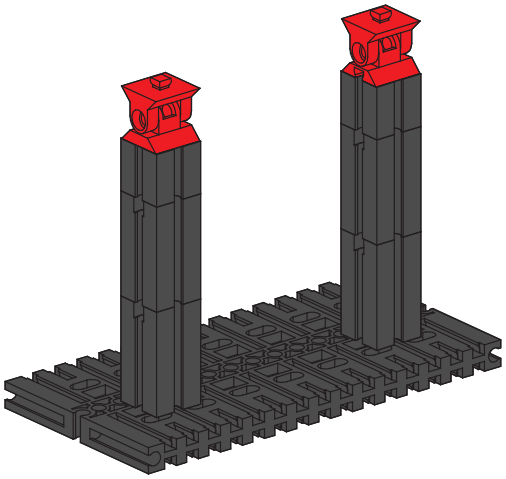

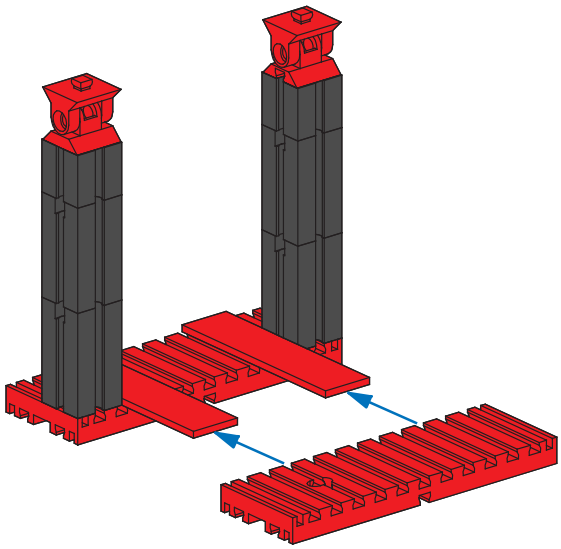

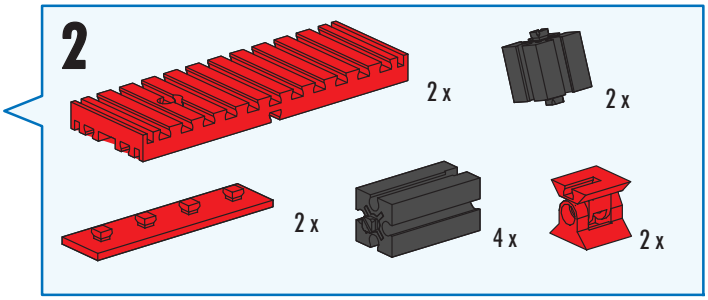

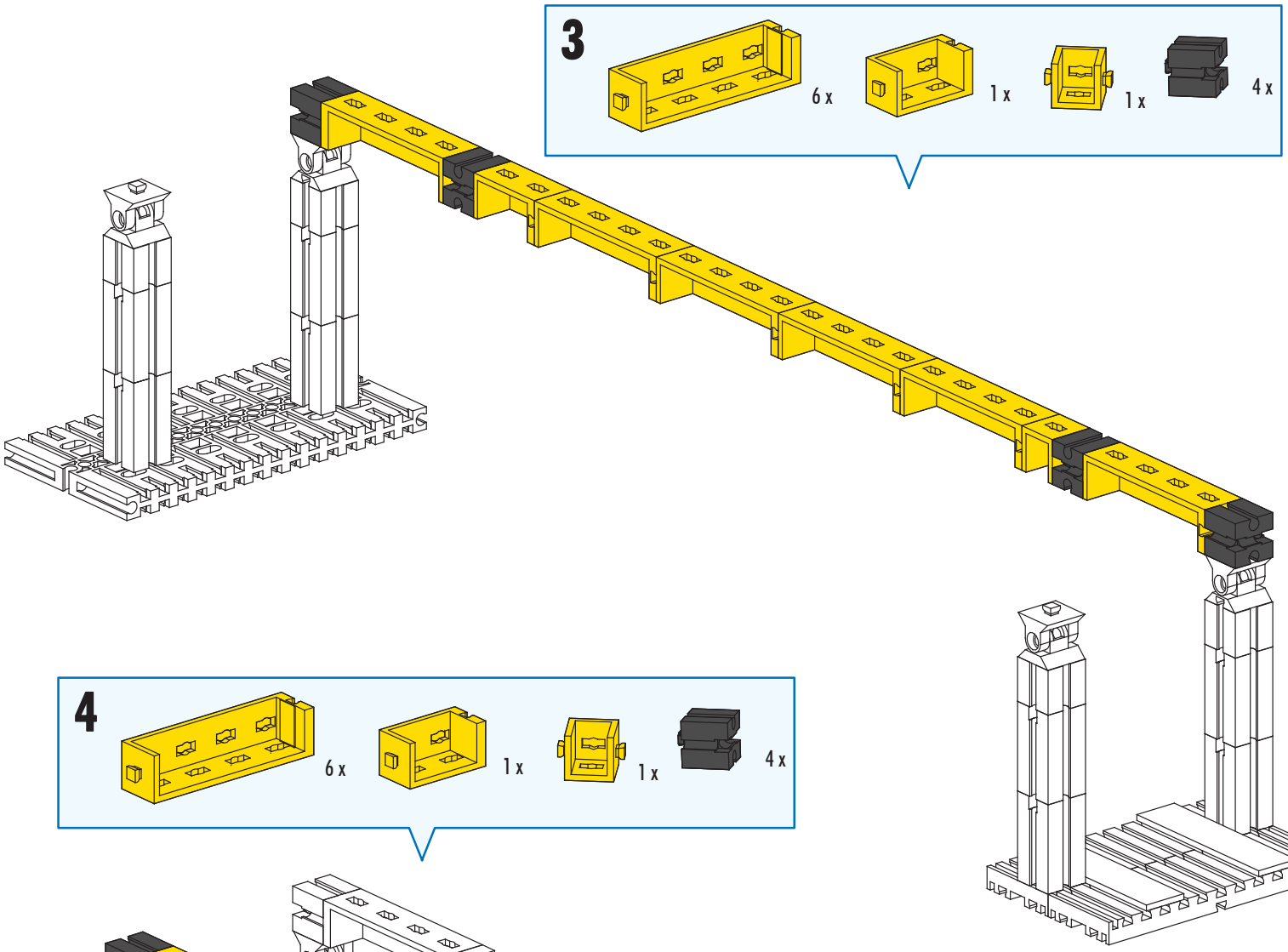
3
6 x
1 x
1 x
4 x

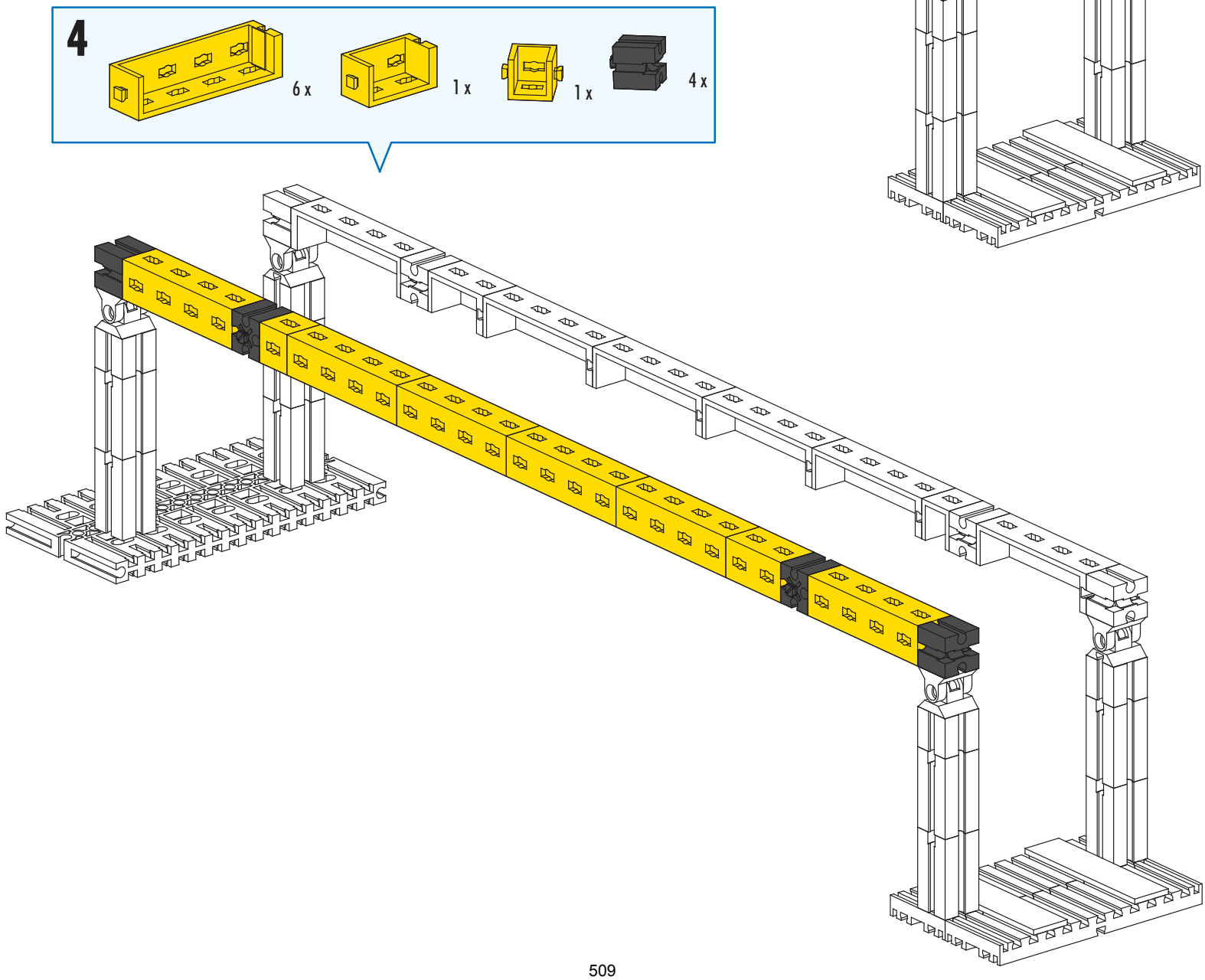
4
6 x
1 x
1 x
4 x

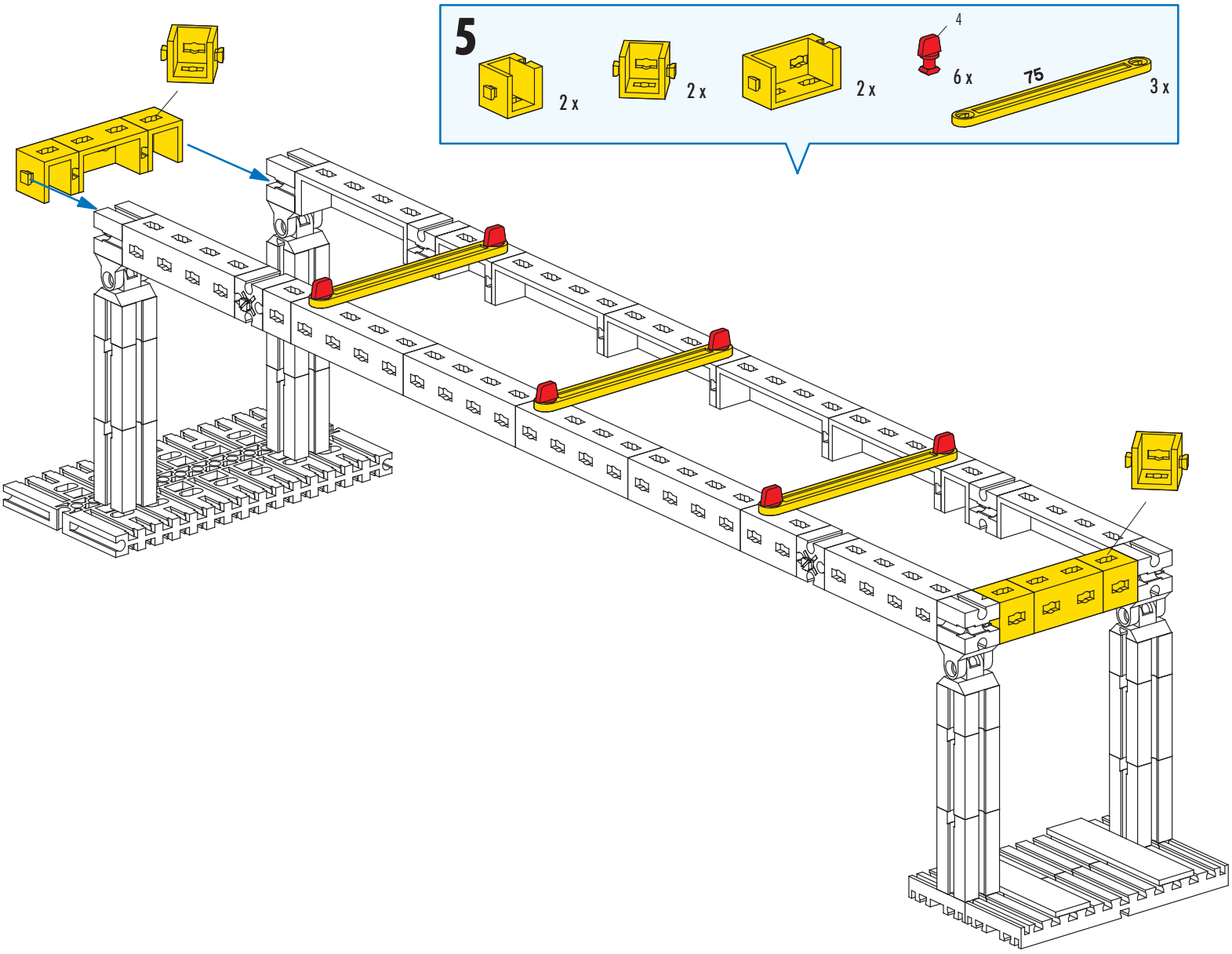
5
2 x
2 x
2 x
4
6 x
75
3 x

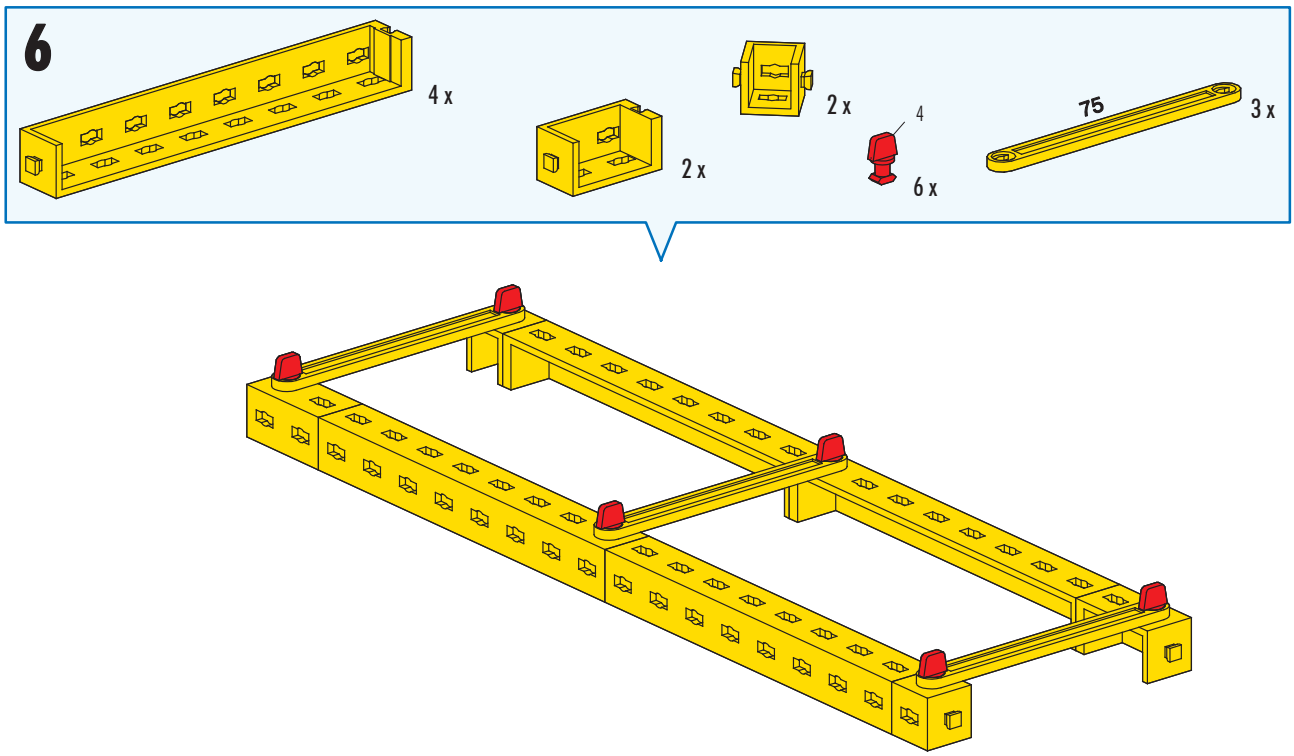
6
4 x
2 x
2 x
4
6 x
75
3 x

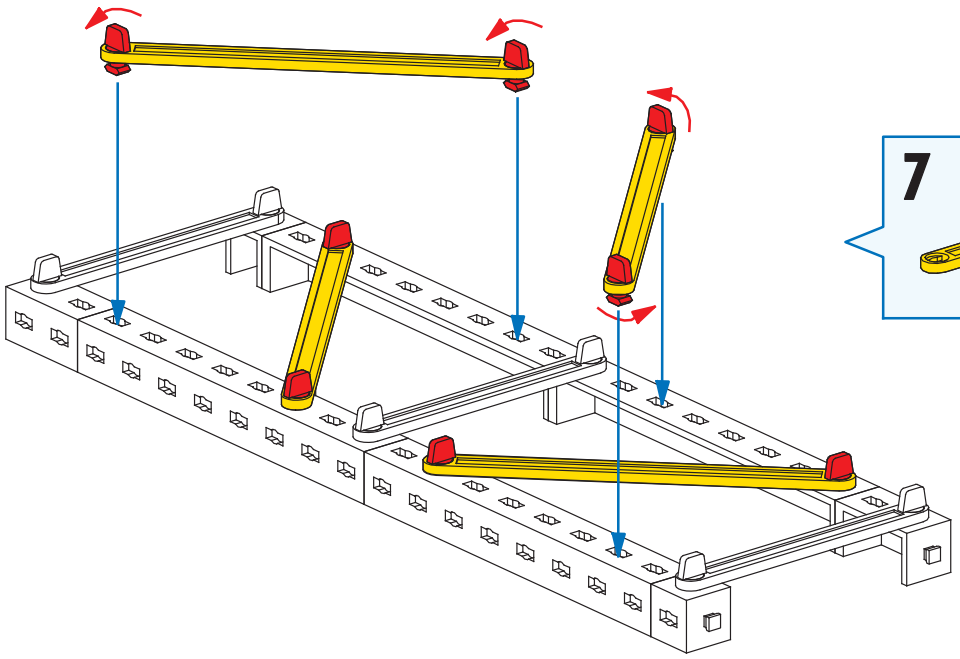

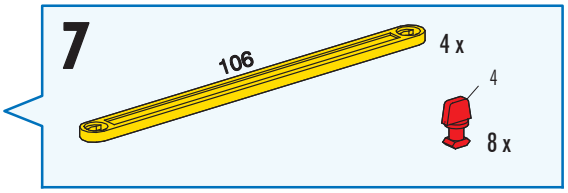
7
106
4 x
4
8 x

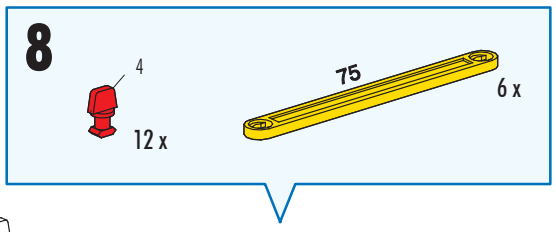
8
4
12 x
75
6 x

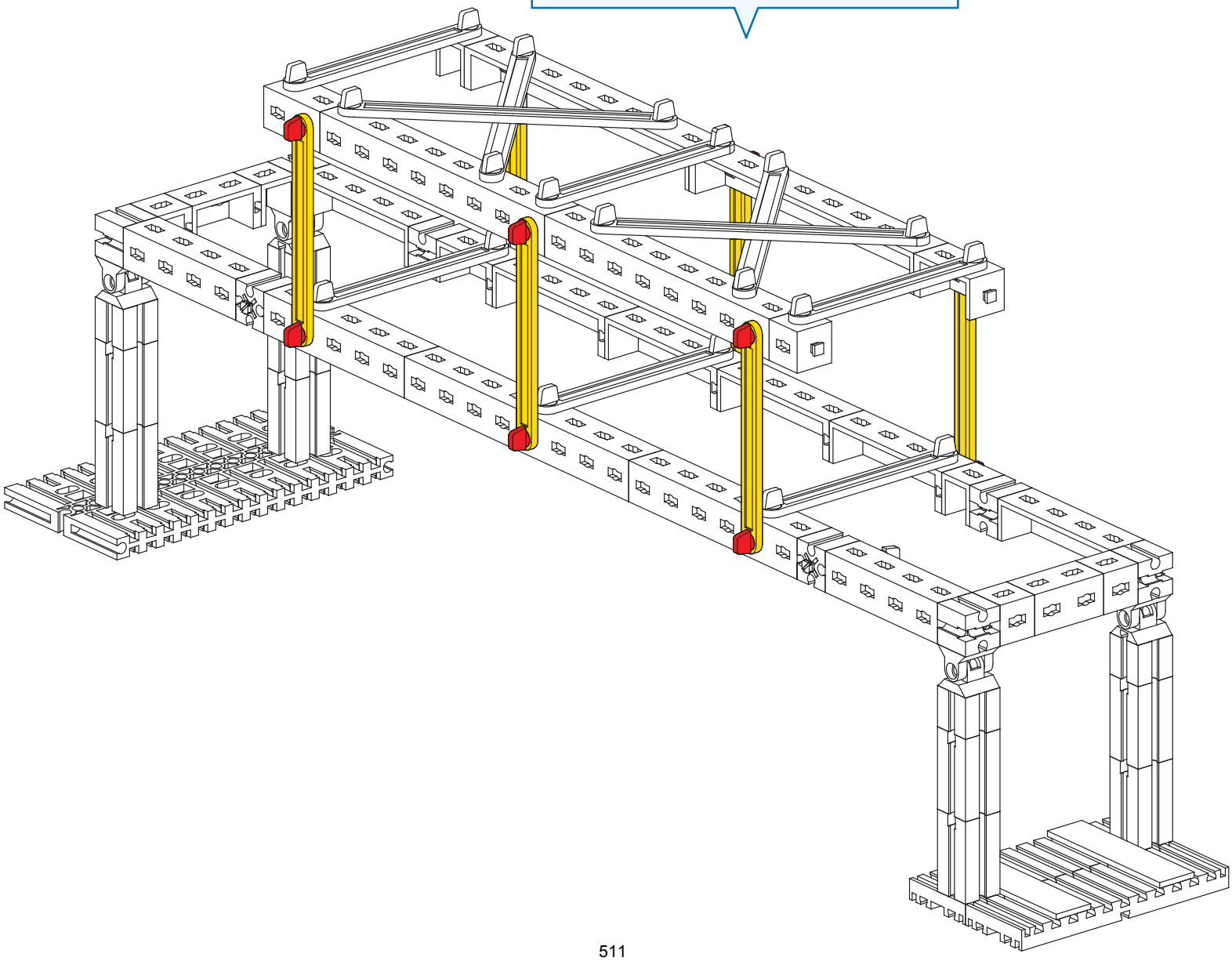

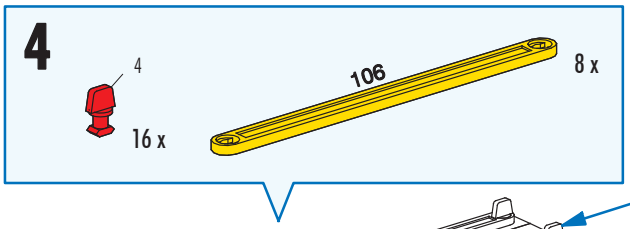
4
4
16 x
106
8 x

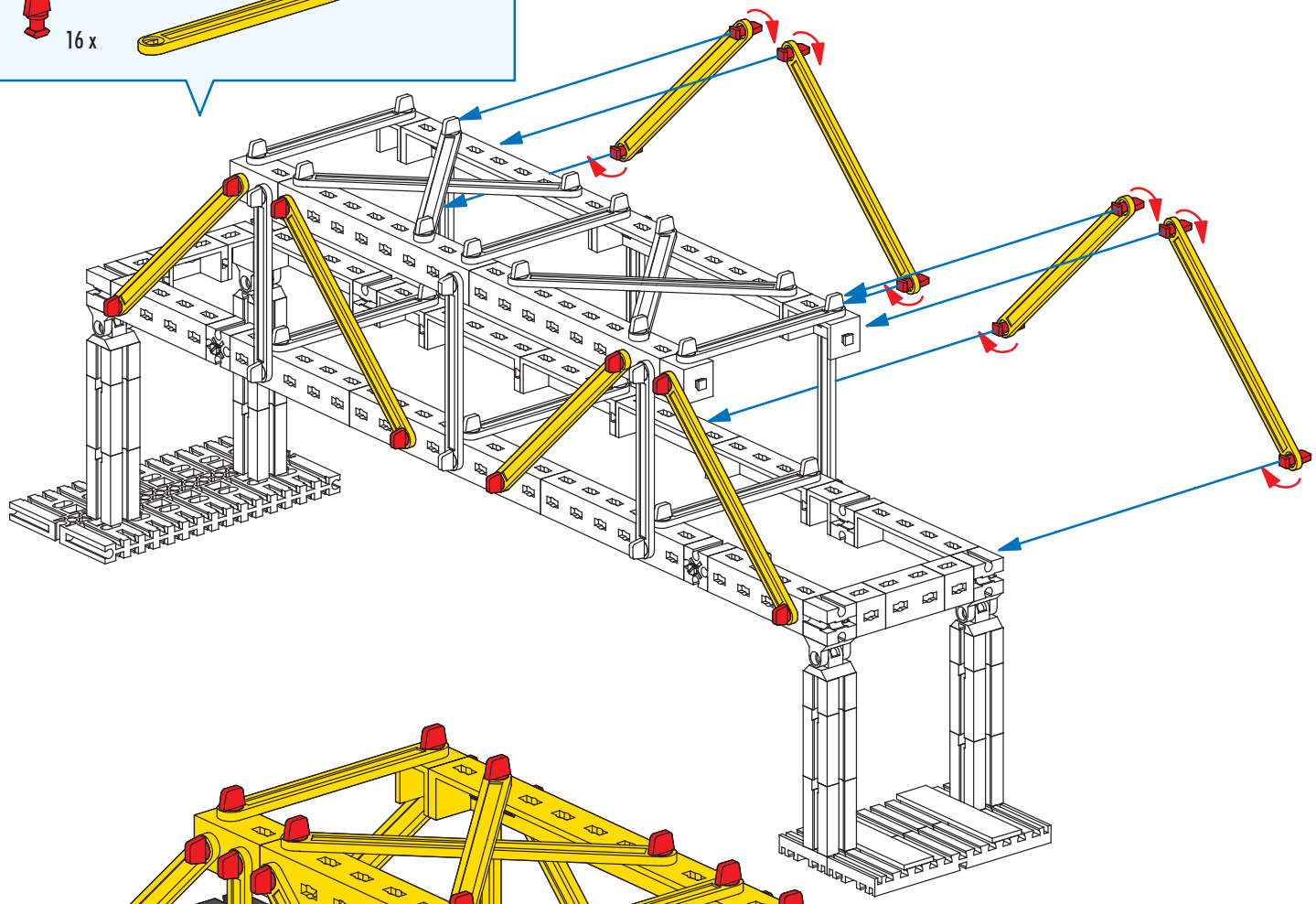

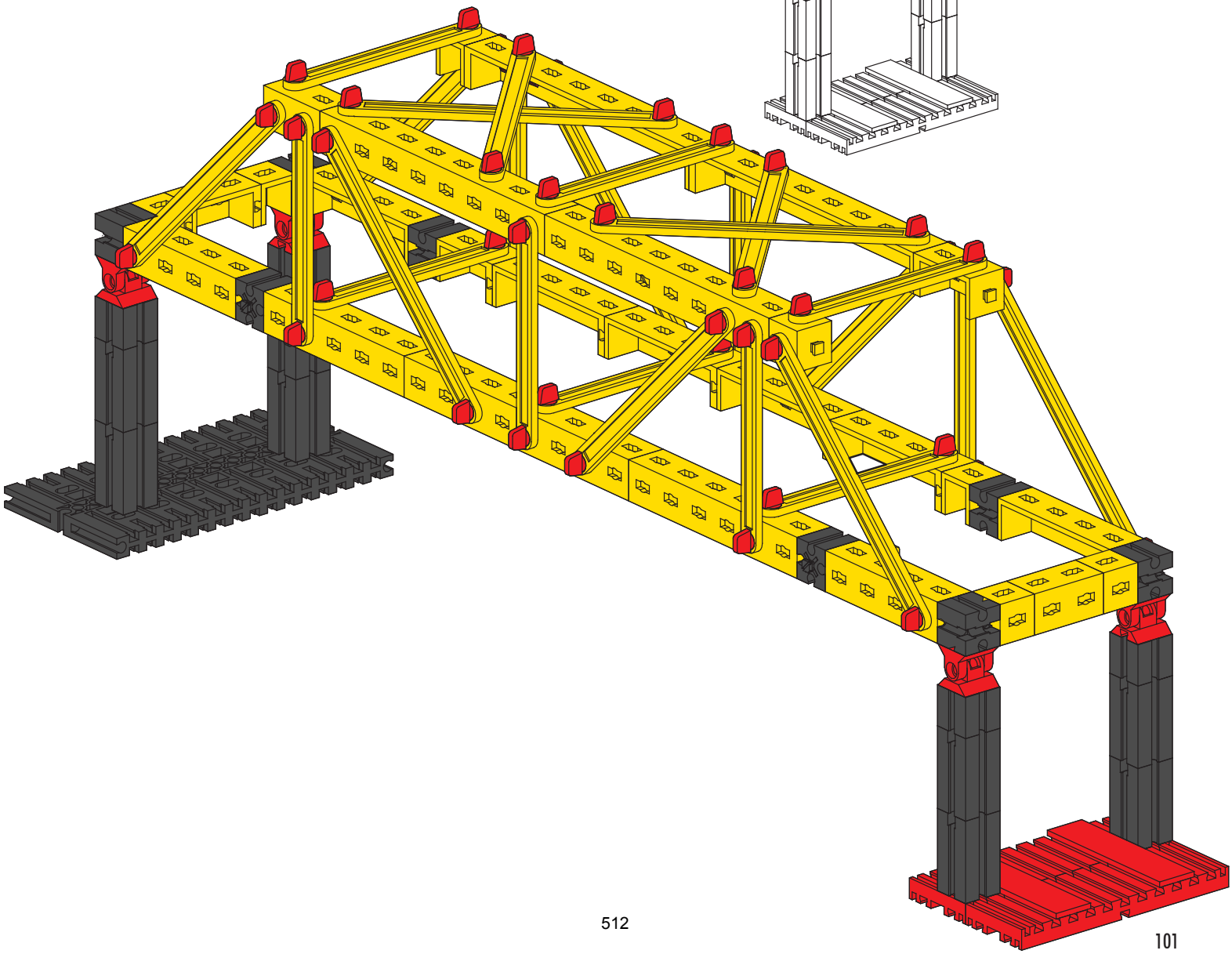

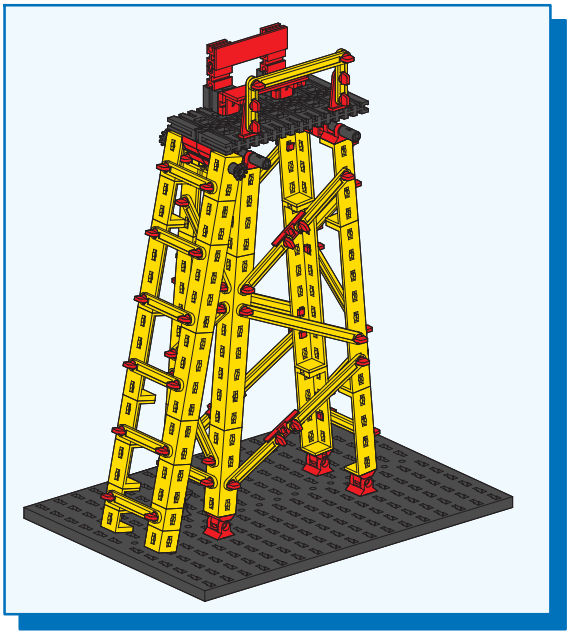

Hochsitz
High hunting stand
Mirador

Jachtkansel
Puesto elevado
Assento elevado

Sedile alto
Охотничья вышка
高脚凳

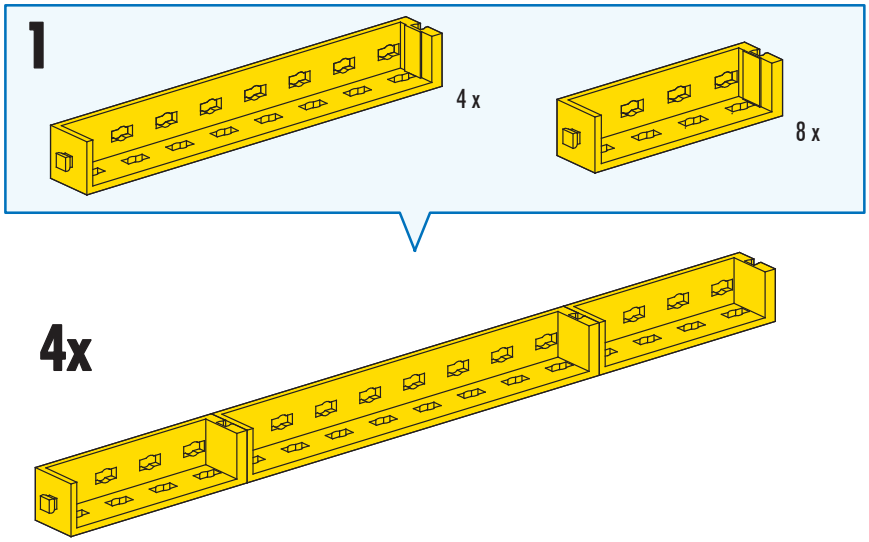

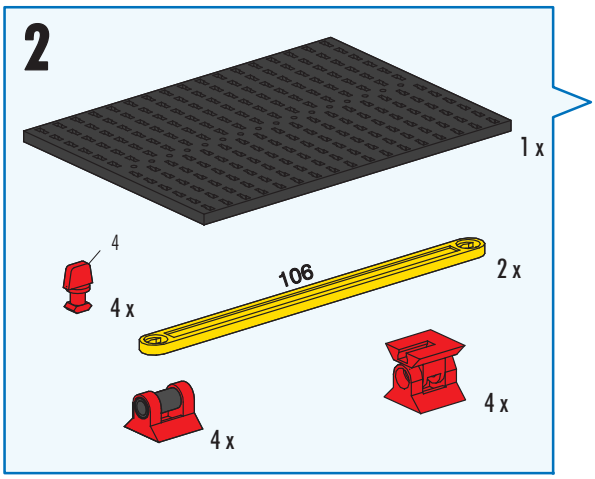

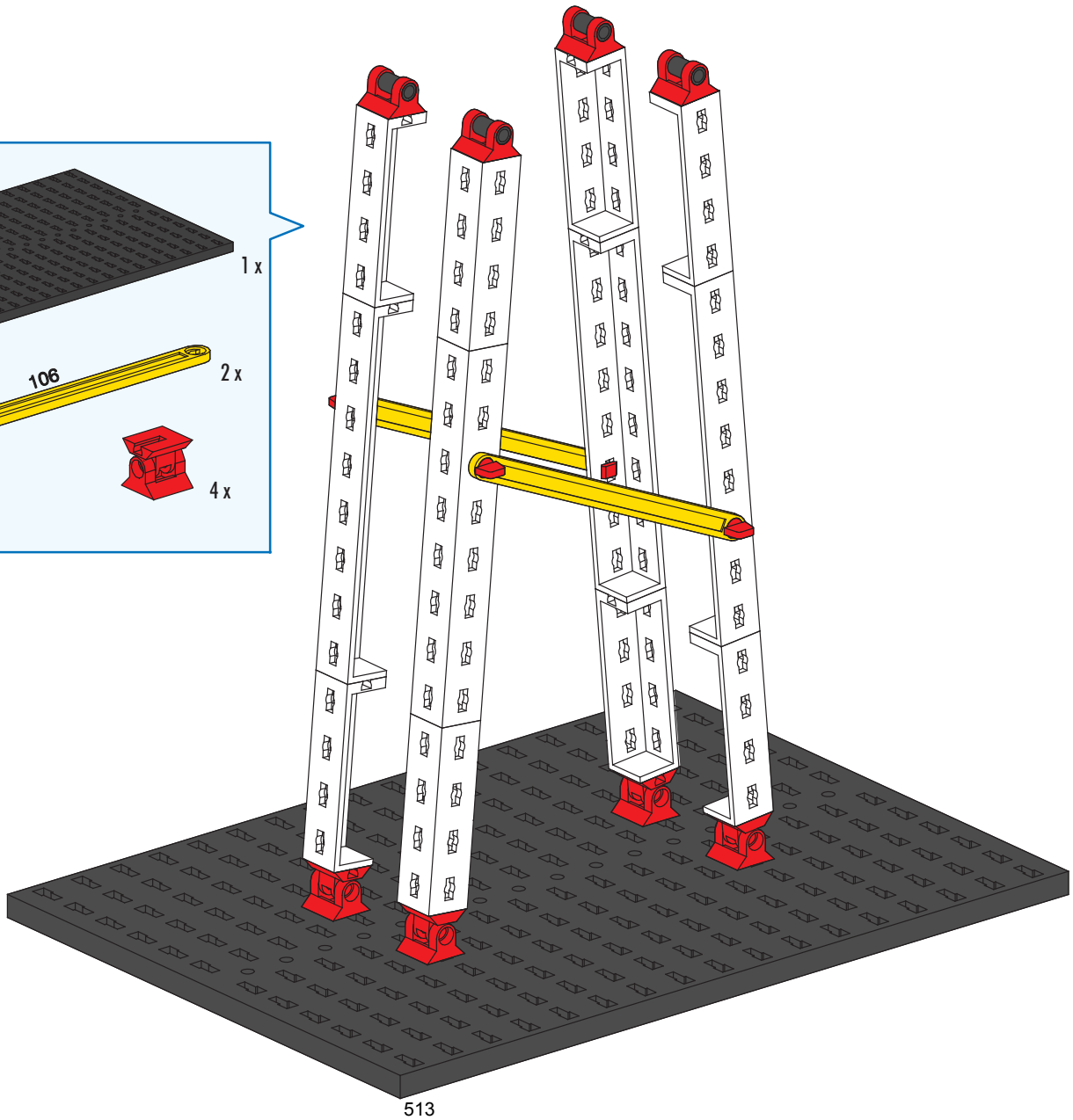

513

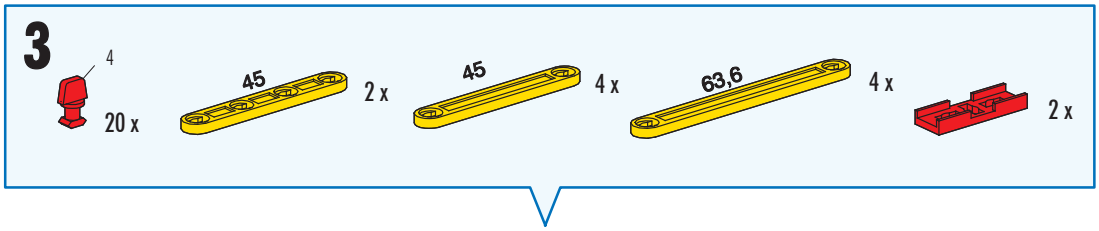
3
4
20 x
45
2 x
45
4 x
63,6
4 x
2 x

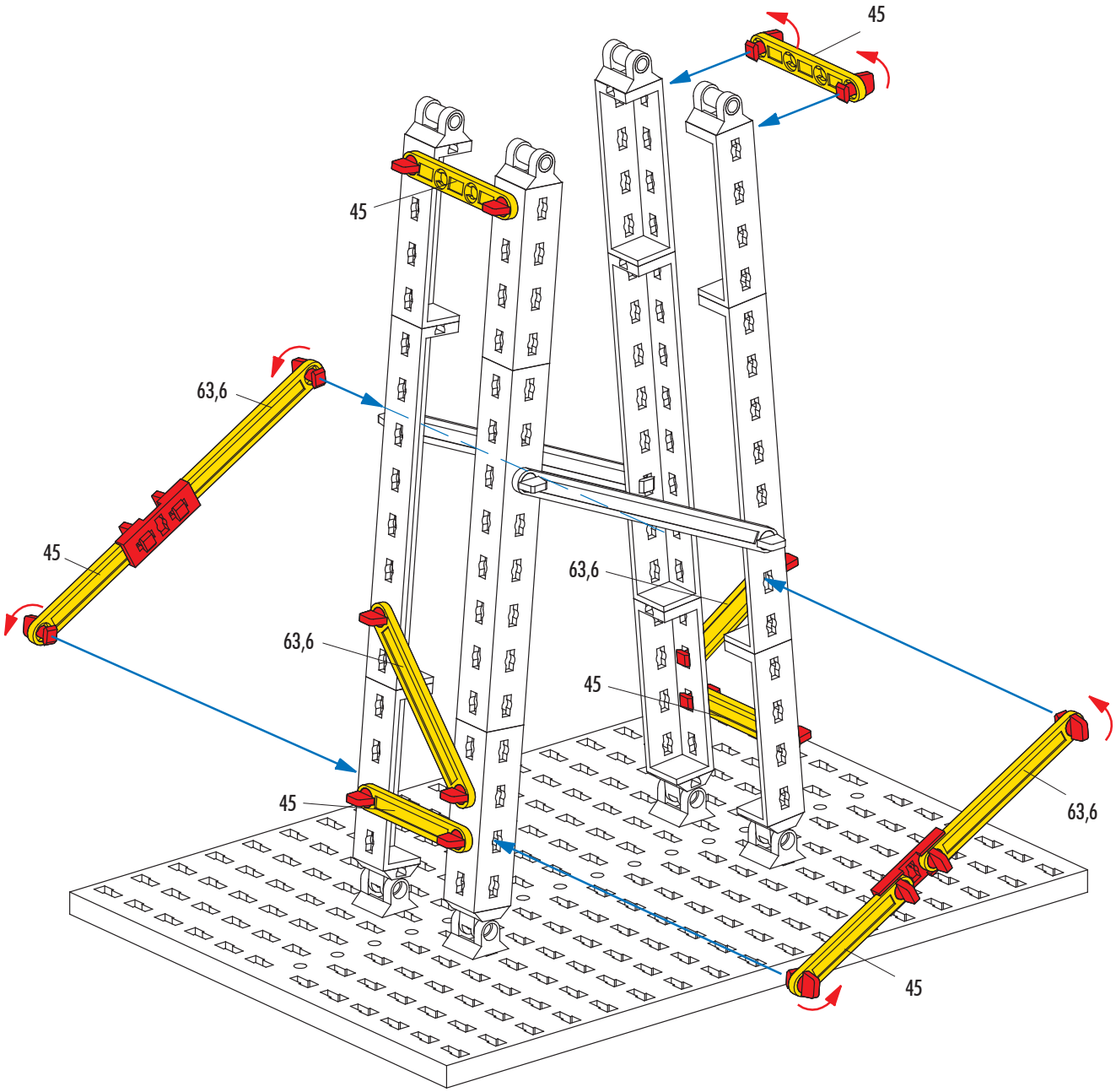
45
45
63,6
45
63,6
63,6
45
45
63,6
45

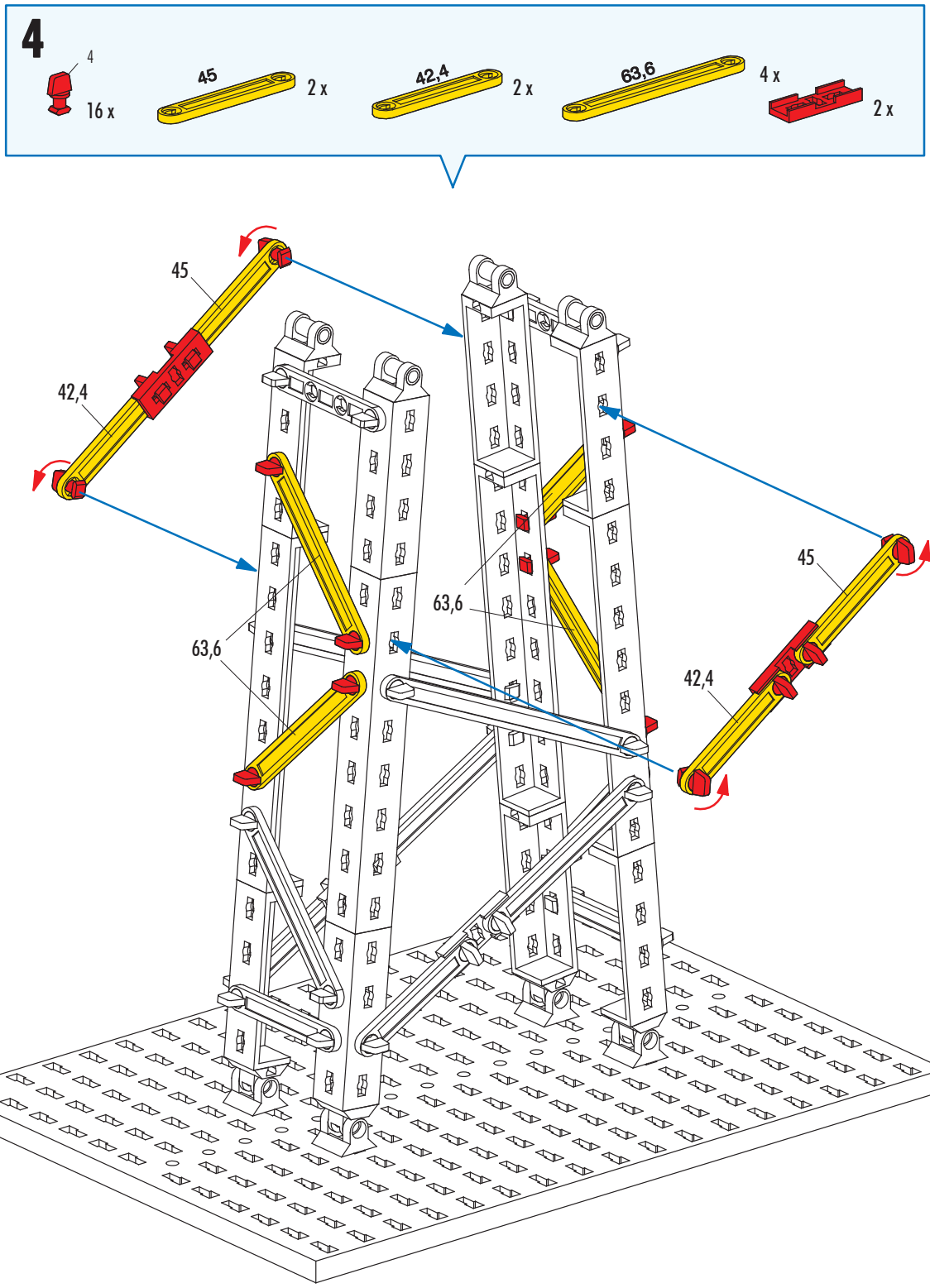
4
4
16 x
45
2 x
42,4
2 x
63,6
4 x
2 x
45
42,4
63,6
63,6
45
42,4

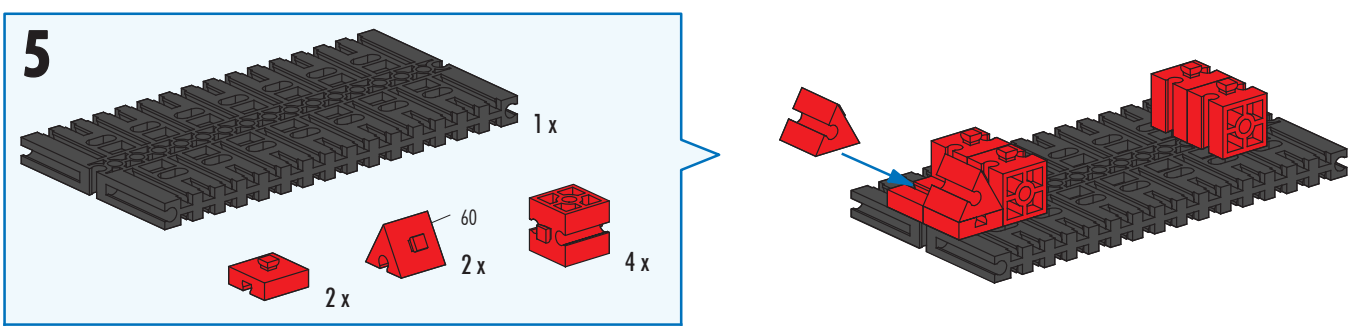
5
1 x
60
2 x
4 x
2 x

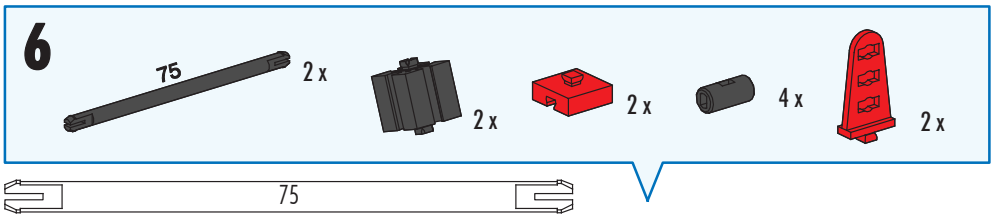
6
75
2 x
2 x
2 x
4 x
2 x

75

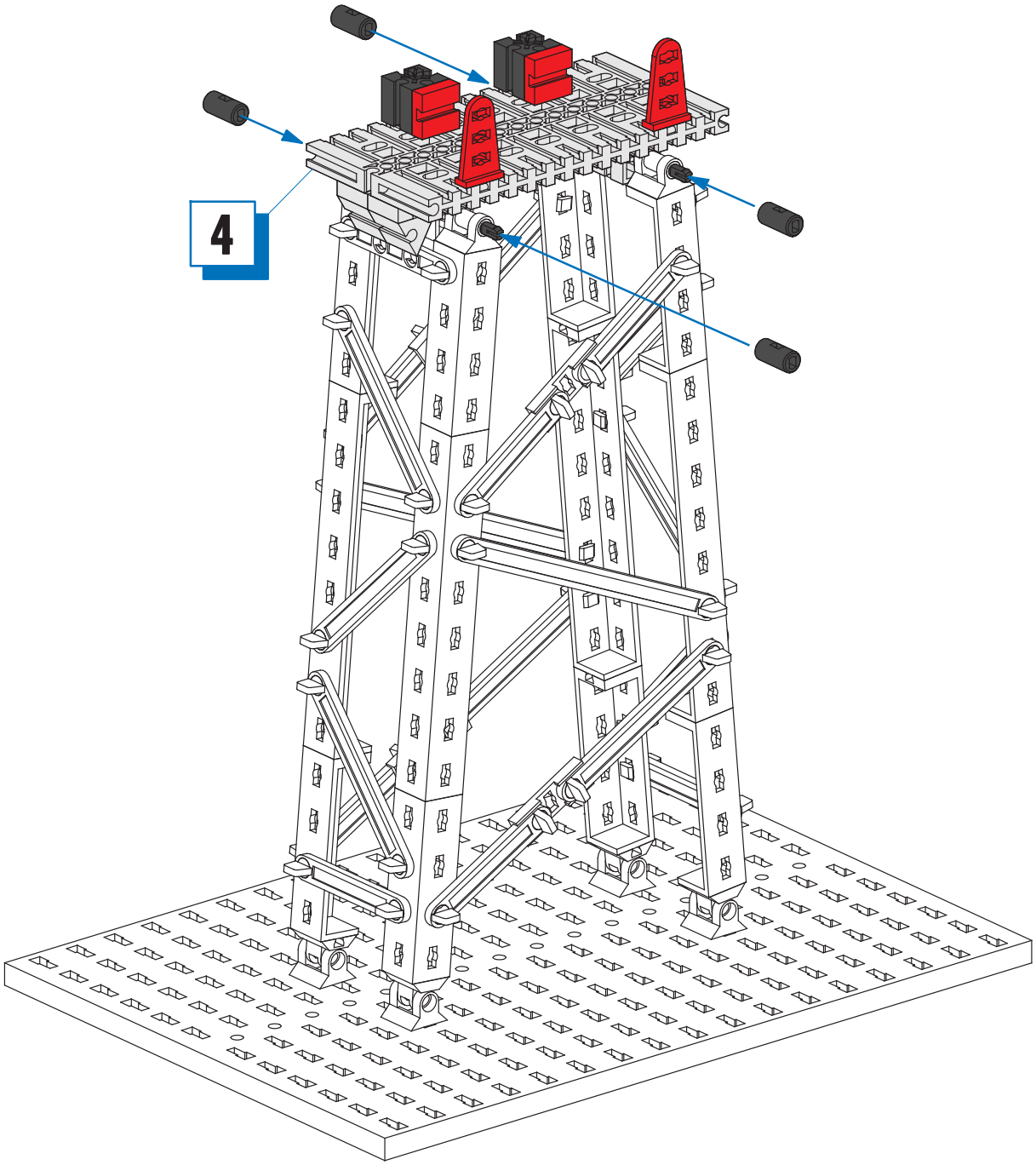
4

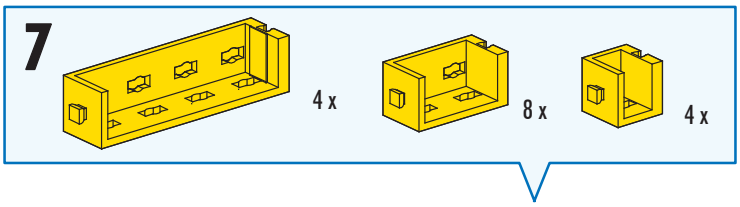
7
4 x
8 x
4 x

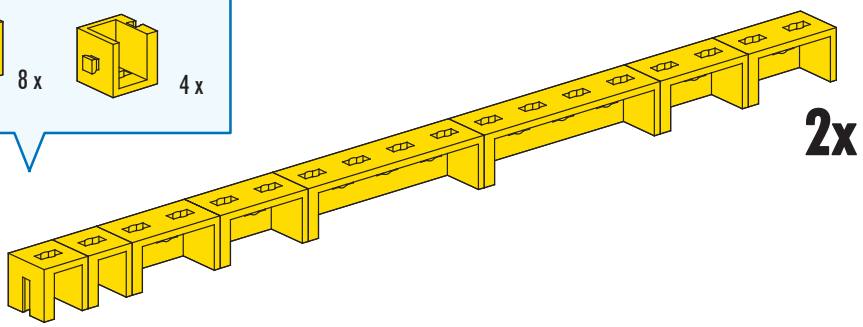
2x

8

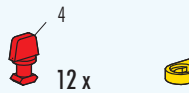

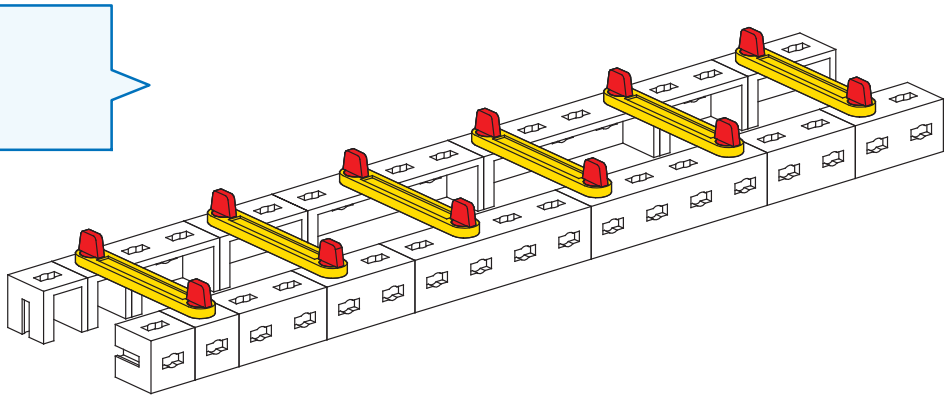

9

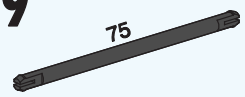

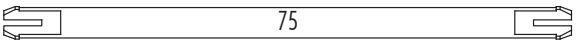

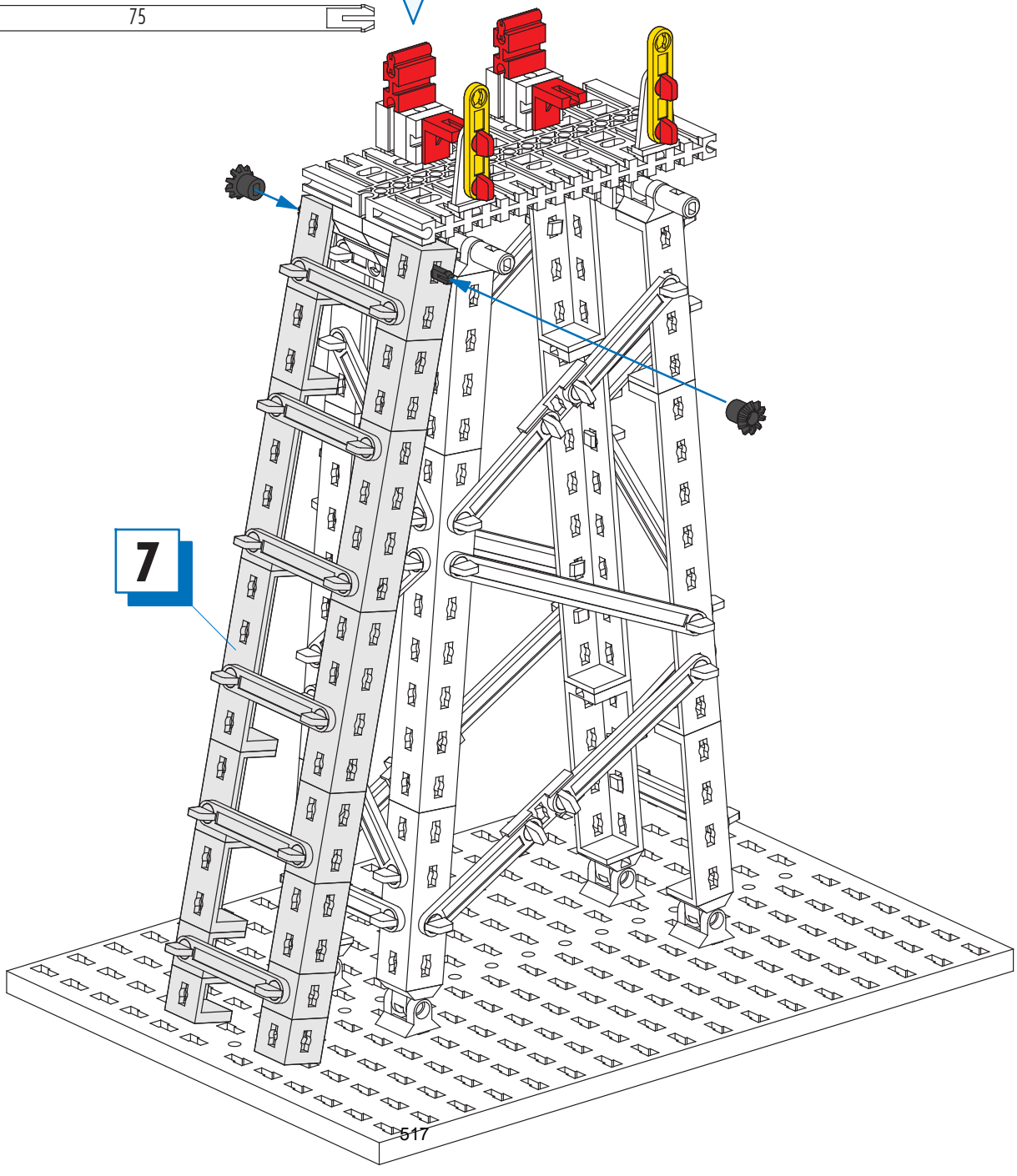

10

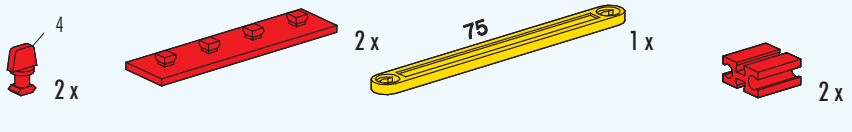

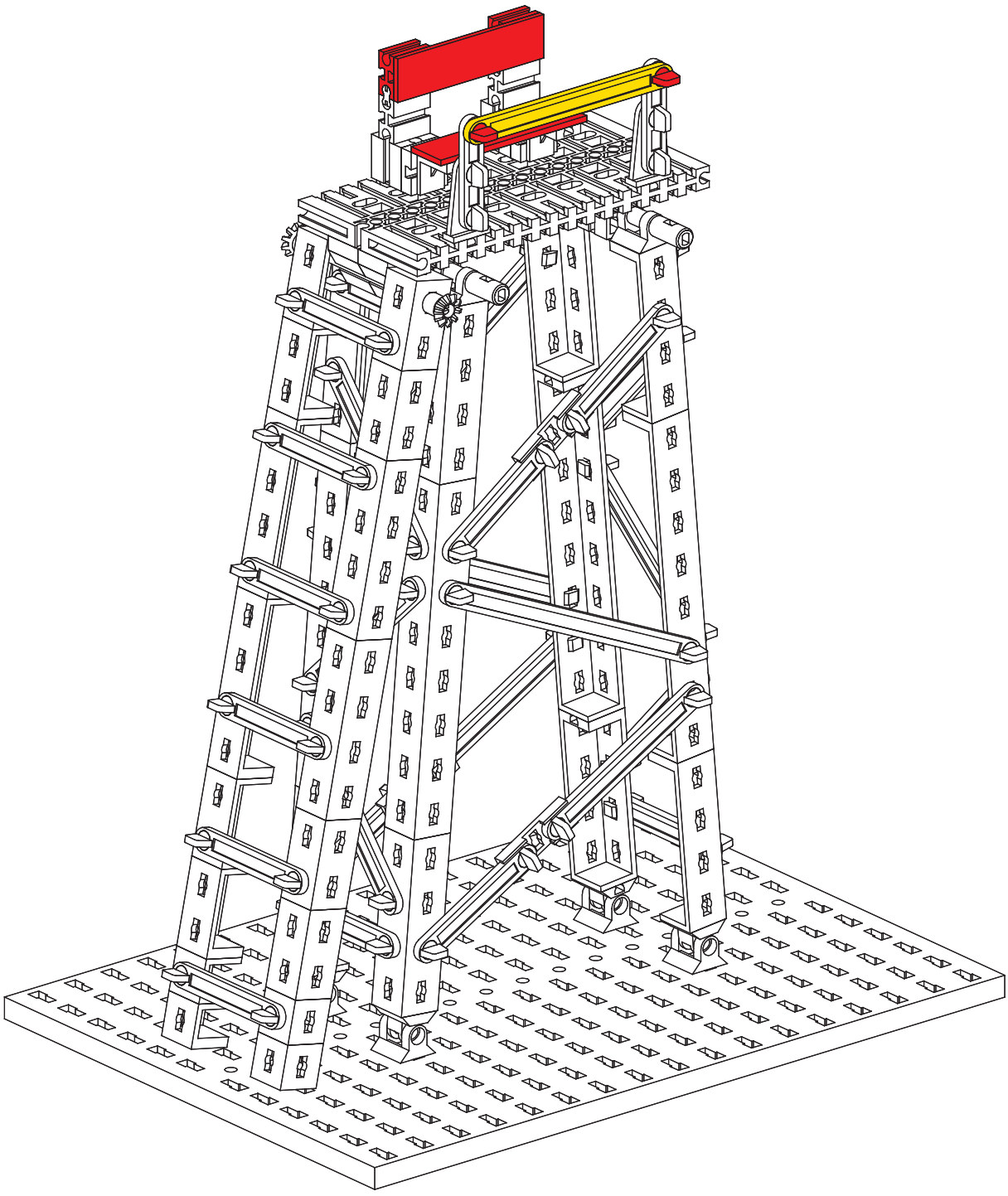

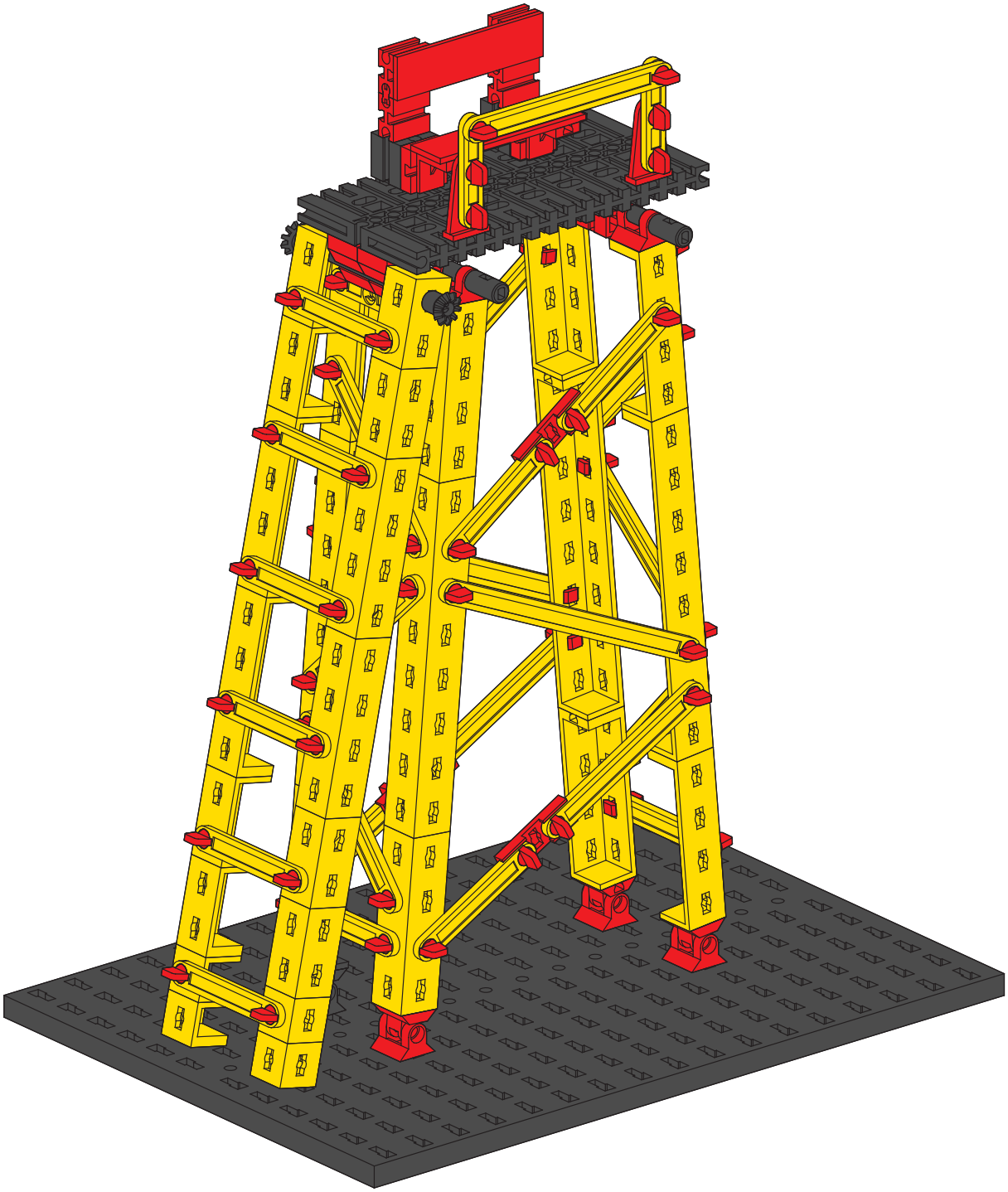

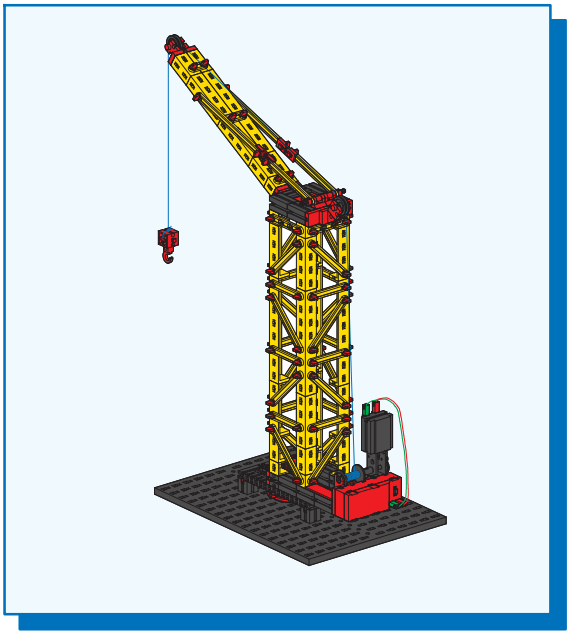

Kran
Crane
Grue

Kraan
Grúa
Guindaste

Gru
Кран
起重机

1

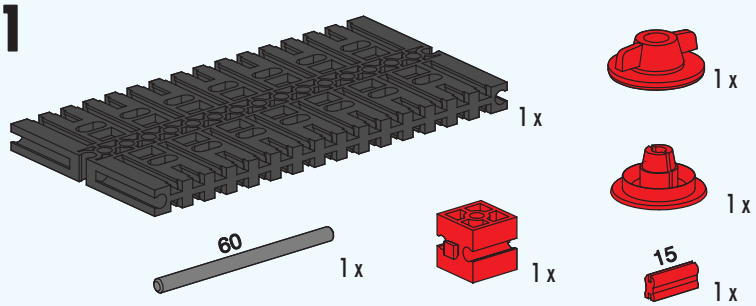

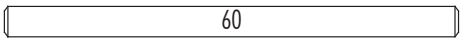

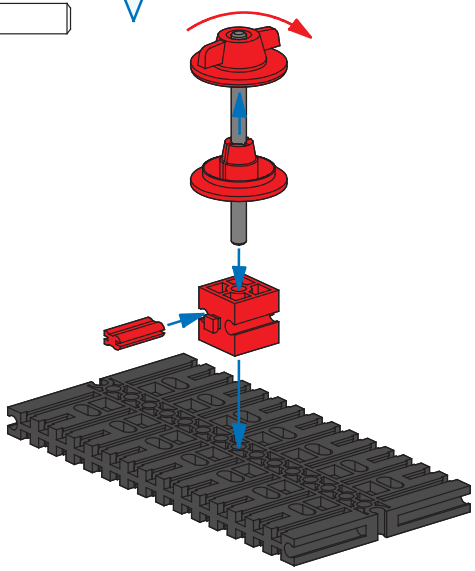

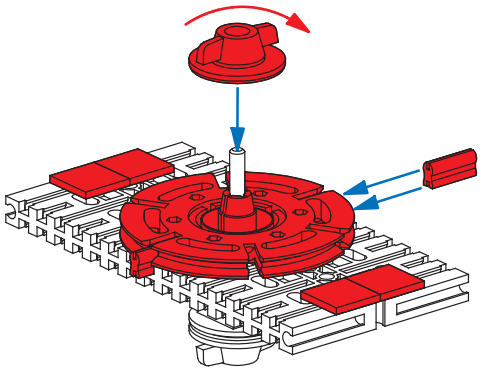

2

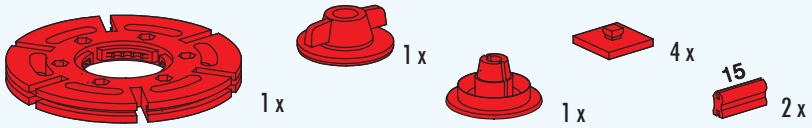

3

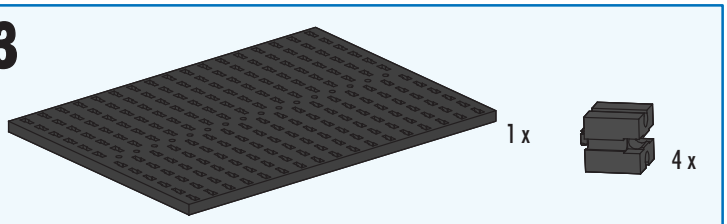

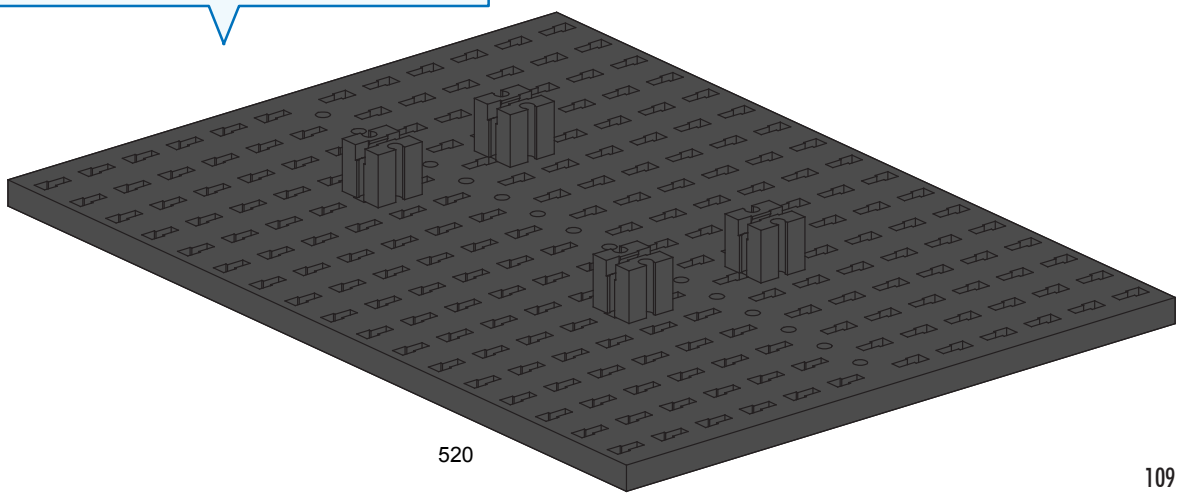

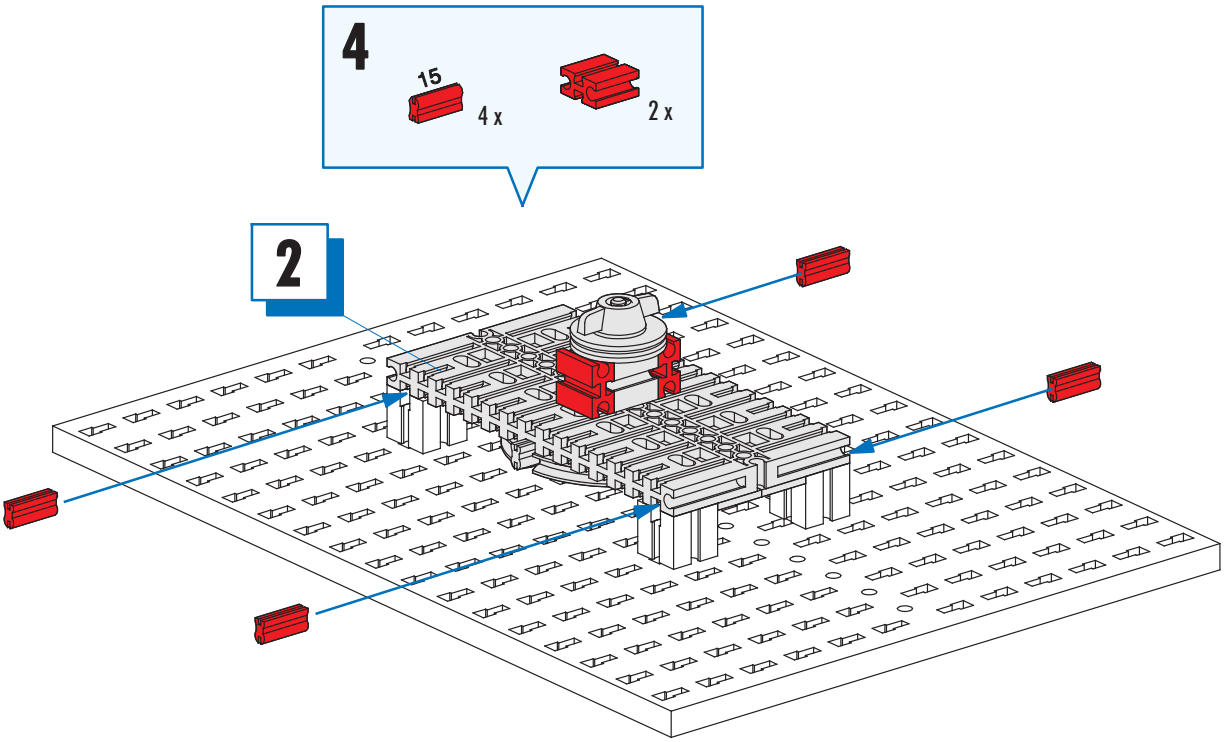
4
15
4 x
2 x
2

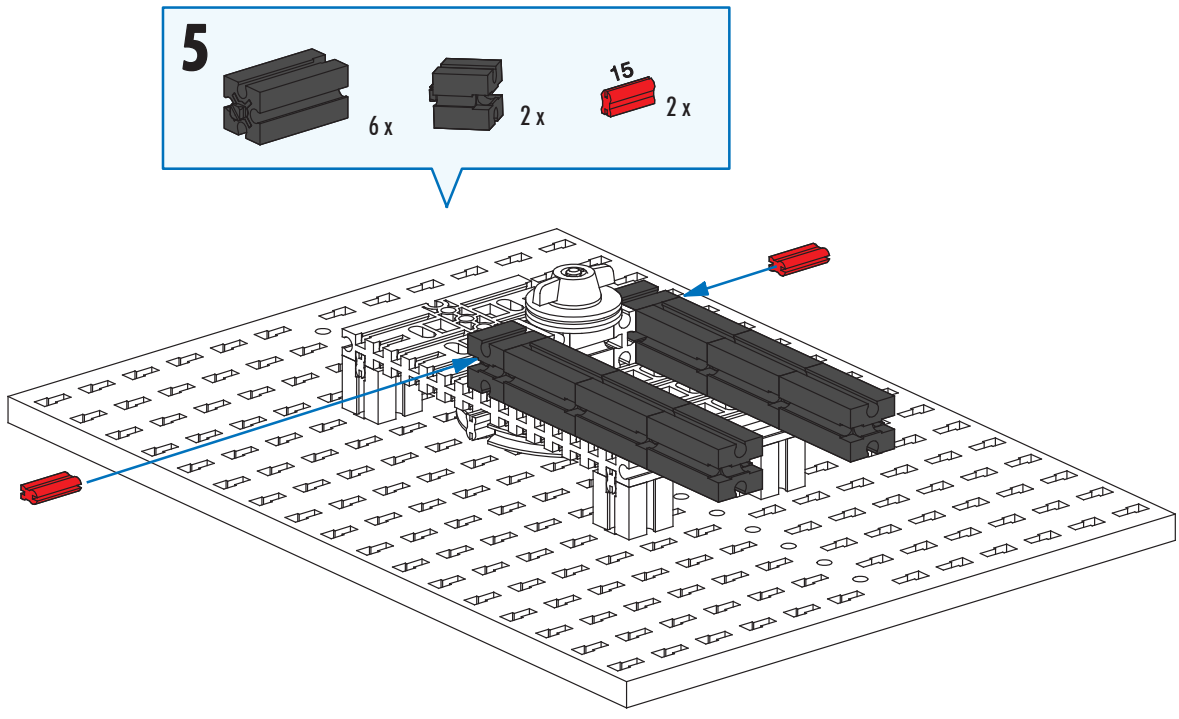
5
6 x
2 x
15
2 x

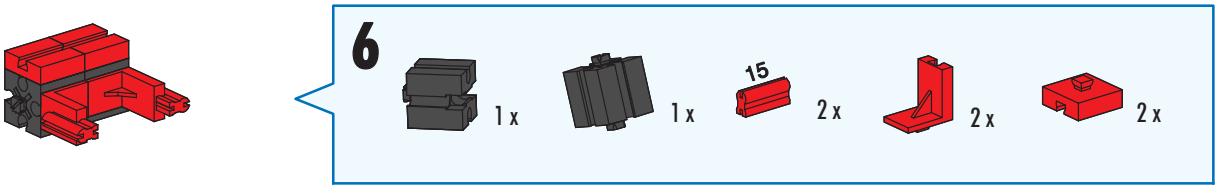
6
1 x
1 x
15
2 x
2 x
2 x

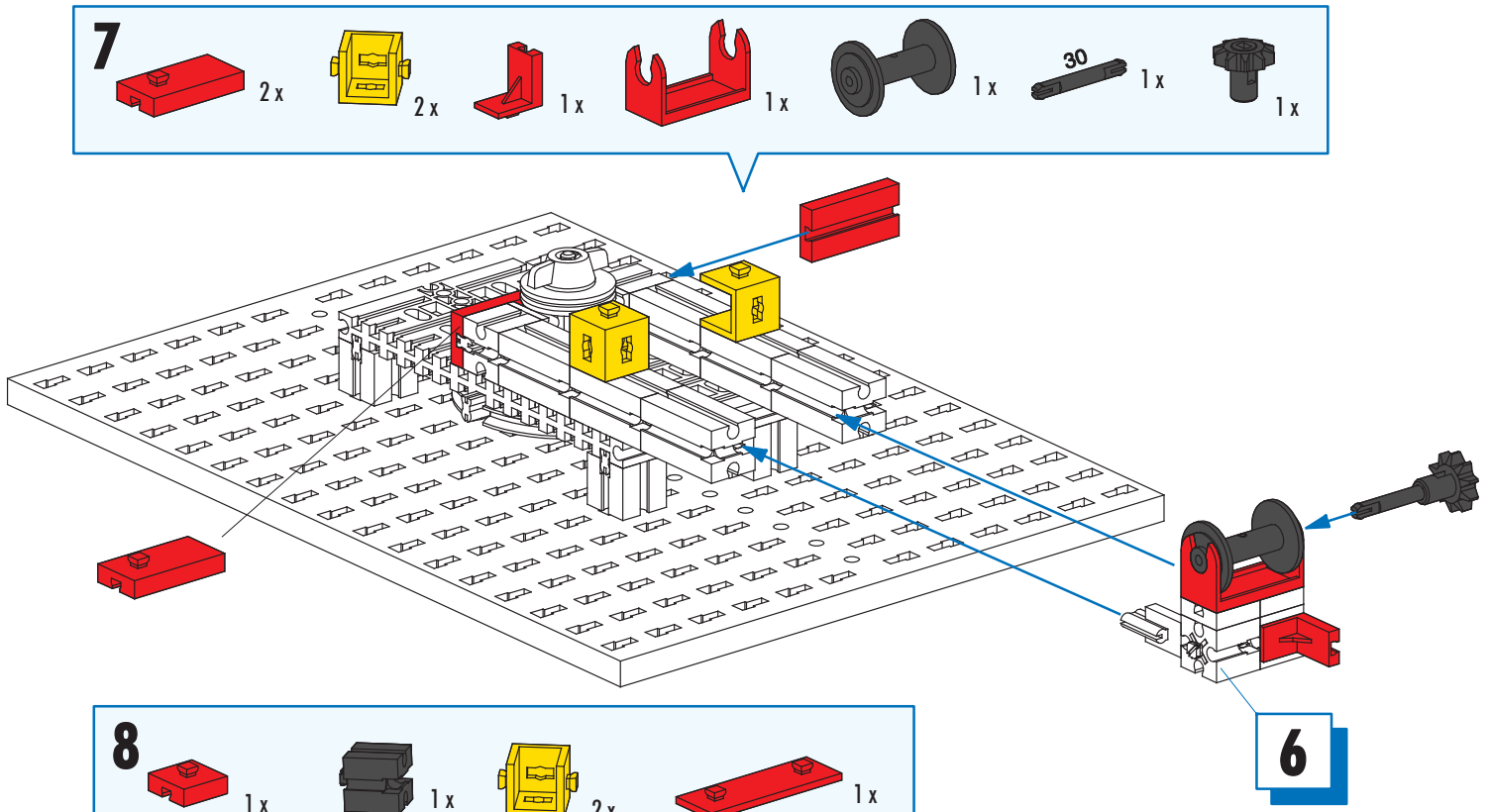
7
2 x
2 x
1 x
1 x
1 x
30
1 x
1 x
6

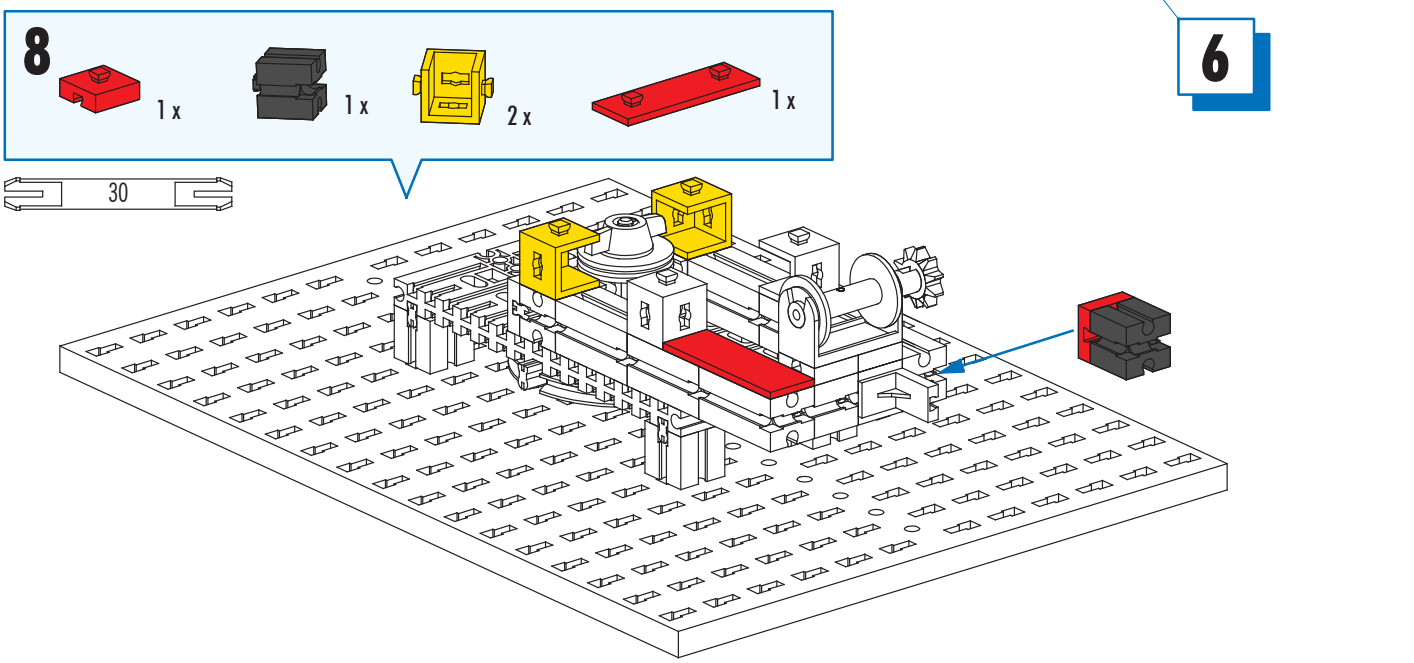
8
1 x
1 x
2 x
1 x
30

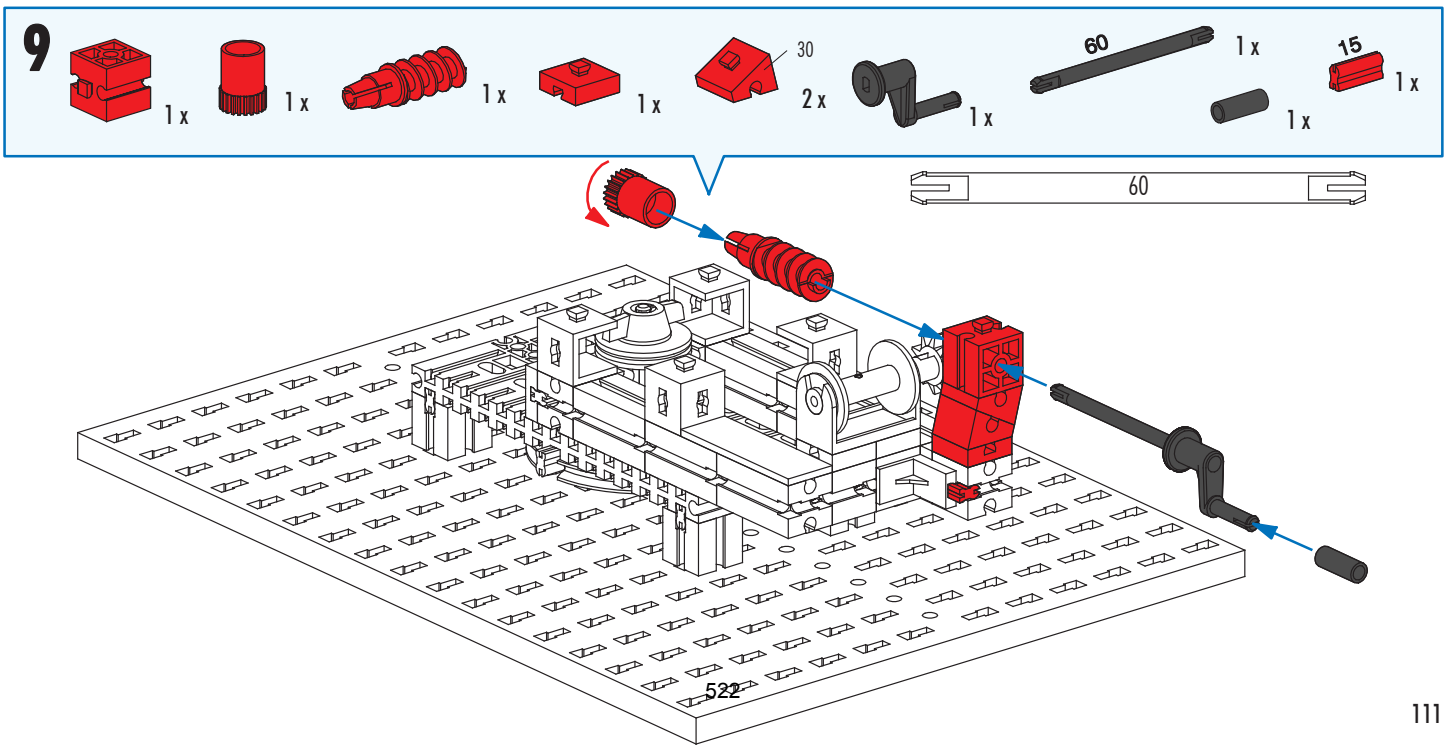
9
1 x
1 x
1 x
1 x
30
2 x
1 x
60
1 x
1 x
15
1 x
60
522

10

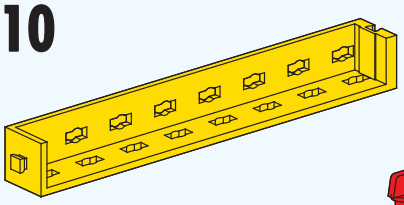
3 x

16 x

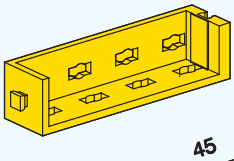
6 x

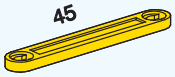

6 x

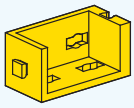
3 x

3 x

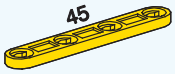

2 x

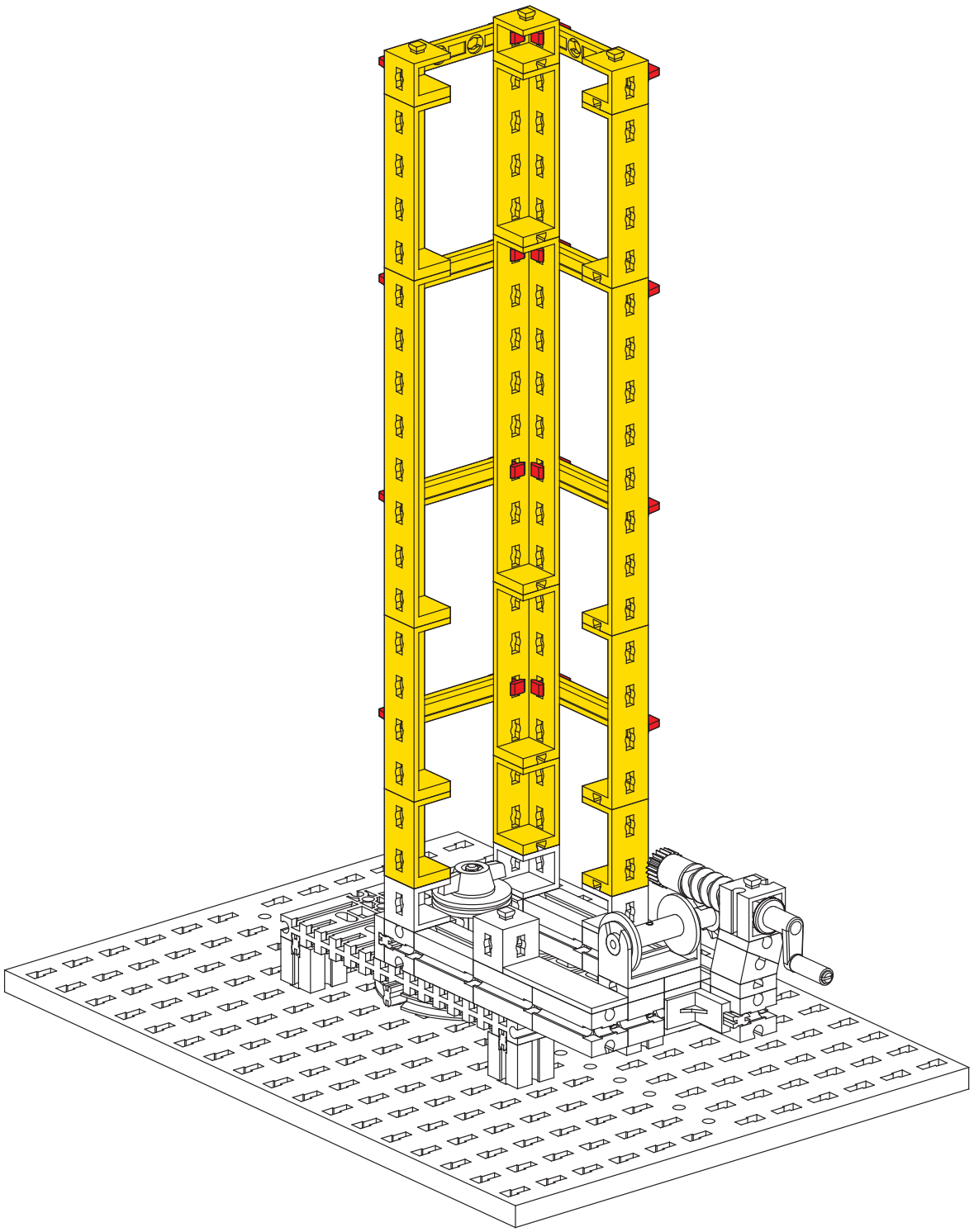

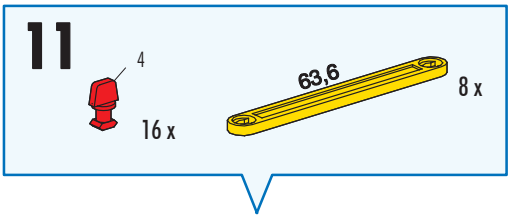
11
4
16 x
63,6
8 x

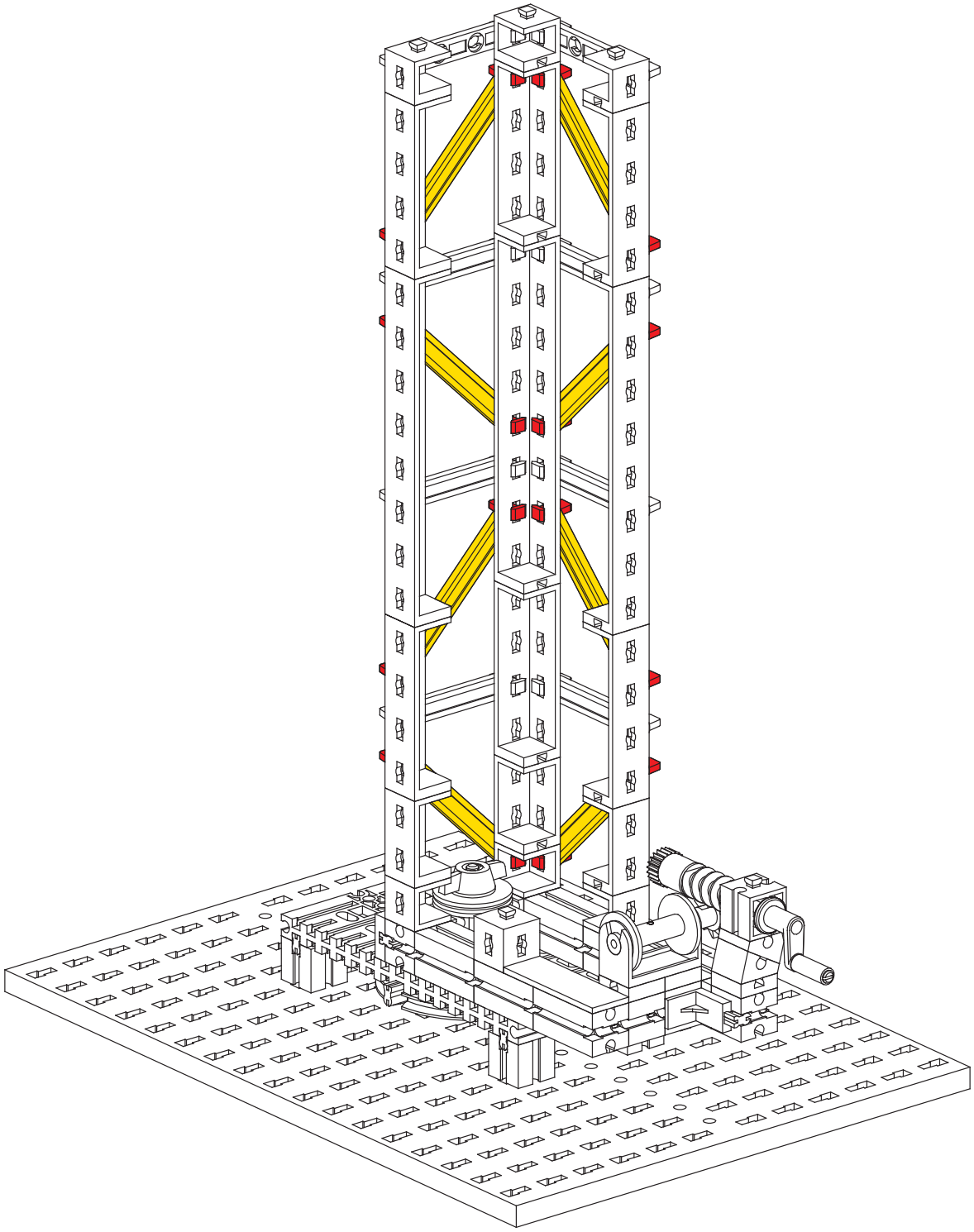

12

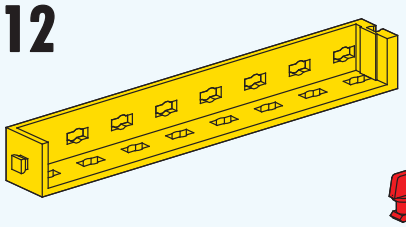
1 x

16 x

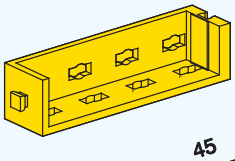
2 x

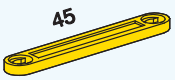

6 x

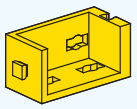
1 x

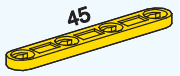

2 x

1 x

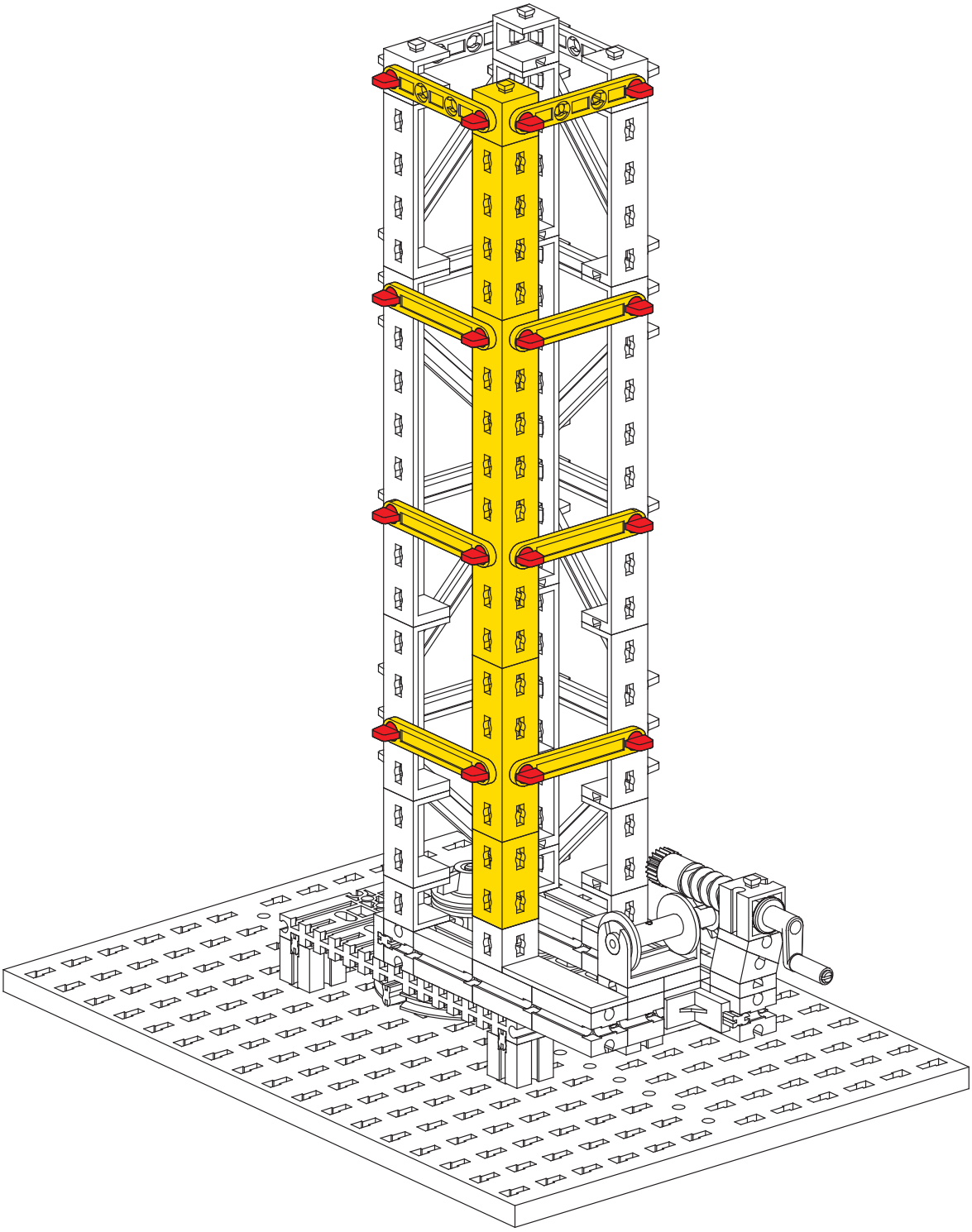

525

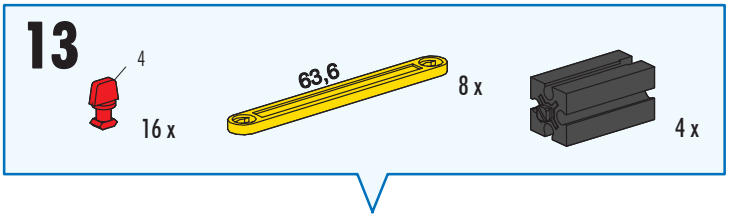
13
4
16 x
63,6
8 x
4 x

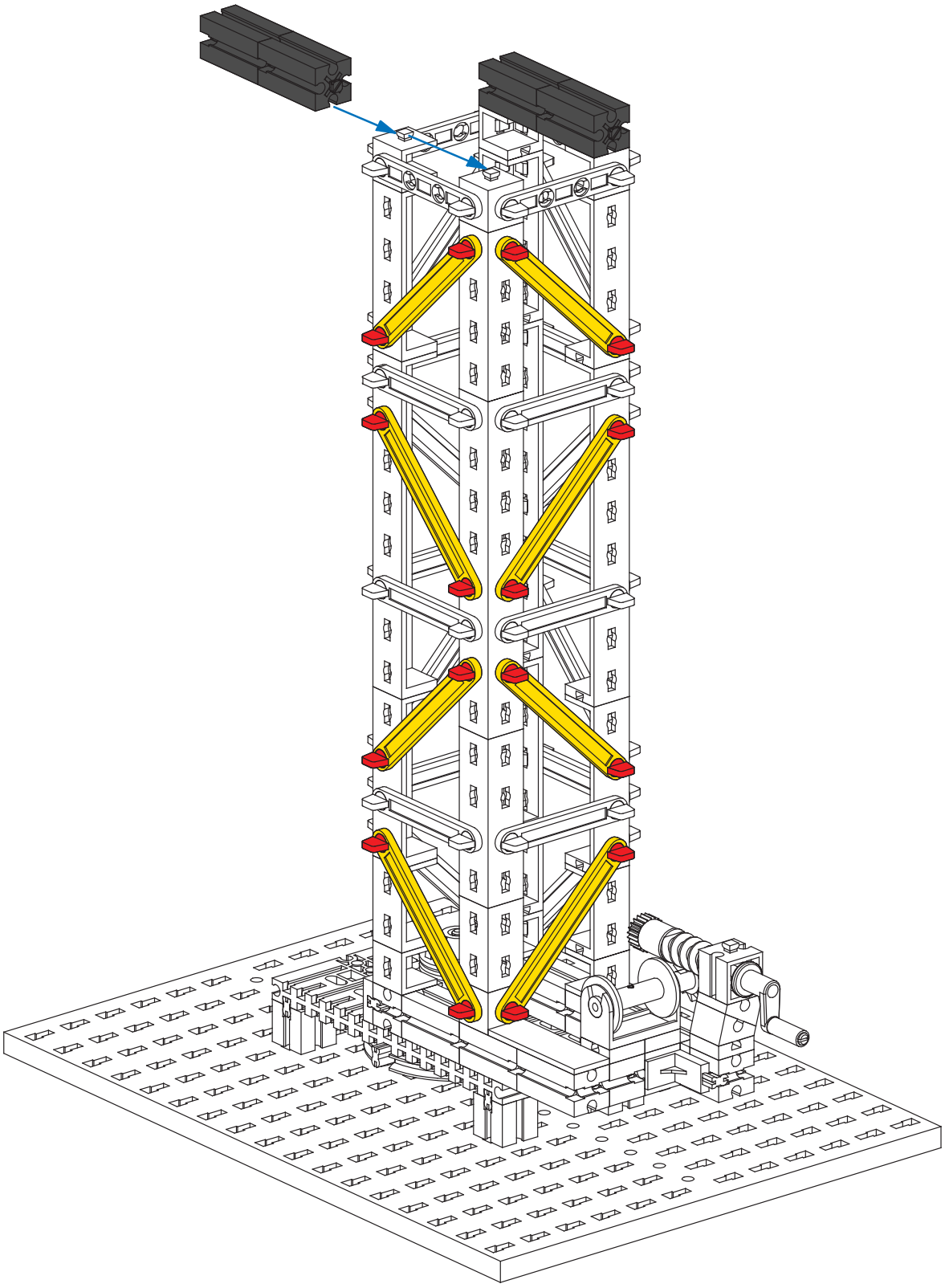

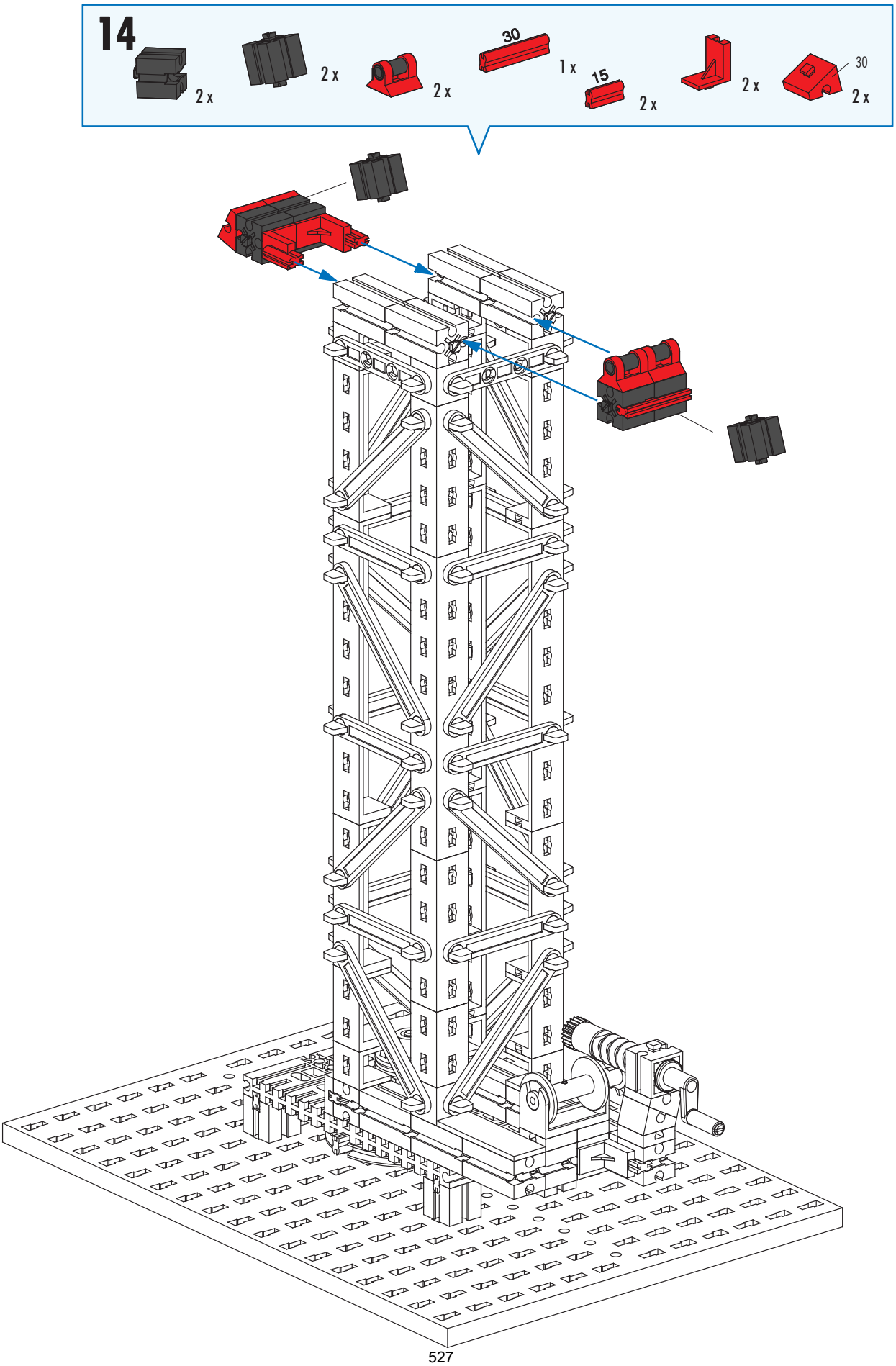
14
2 x
2 x
2 x
30
1 x
15
2 x
2 x
30
2 x
527

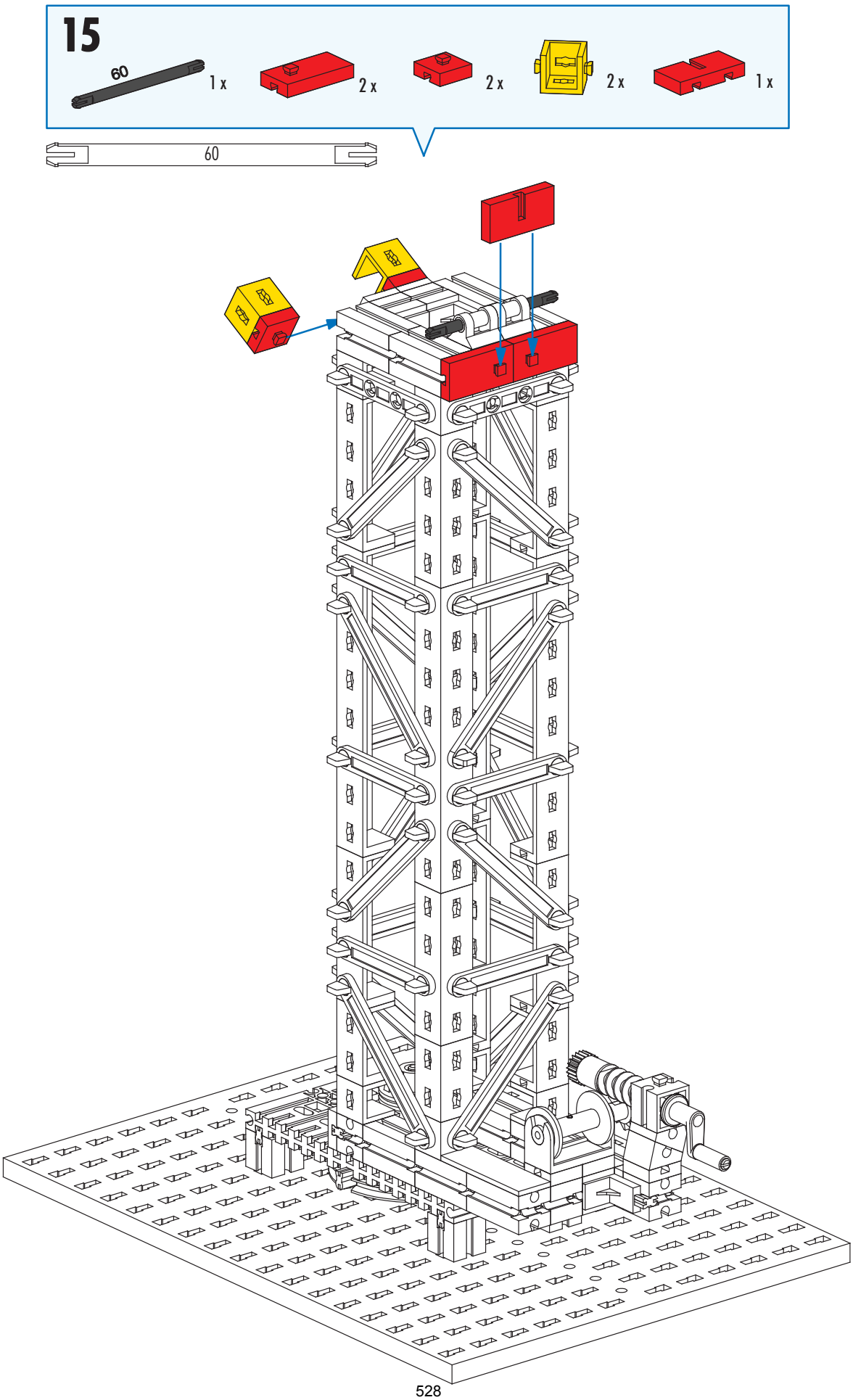

528

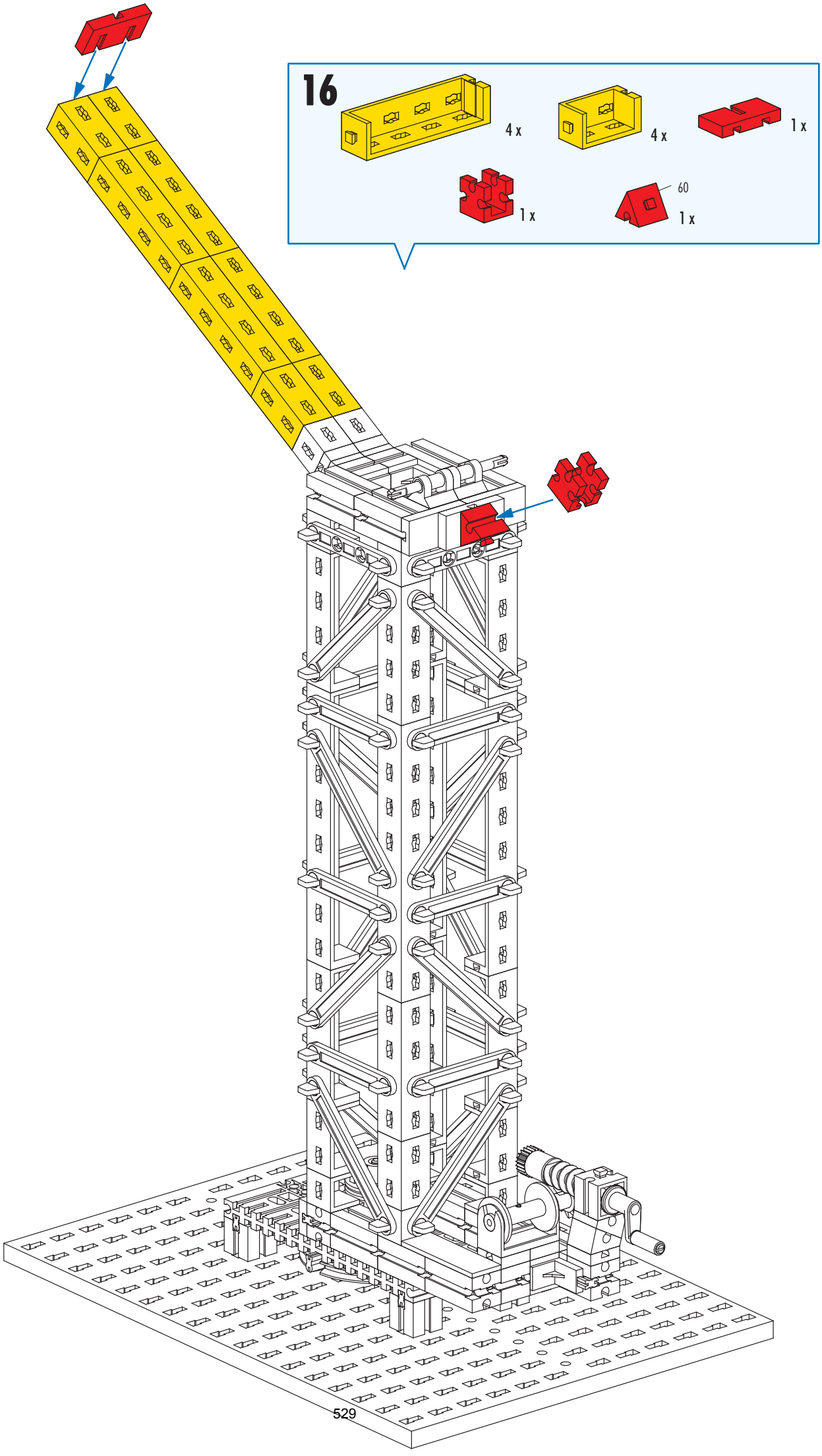
16
4 x
4 x
1 x
1 x
60
1 x
529

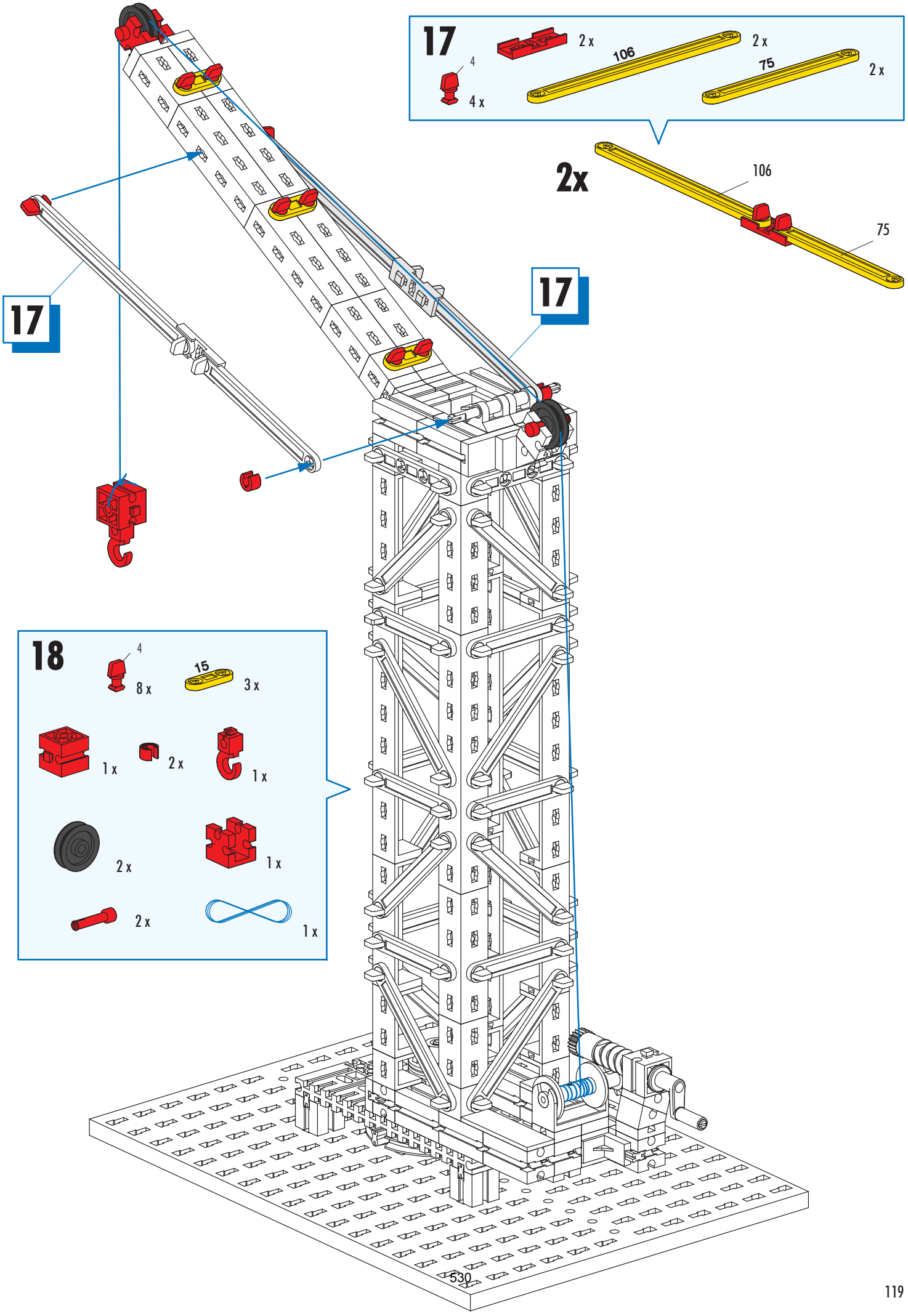
17
4
4 x
2 x
106
2 x
75
2 x
2x
106
75
17
17
18
4
8 x
15
3 x
1 x
2 x
1 x
2 x
1 x
2 x
1 x
530

Motorisierung
Motor unit
Motorisation

Motorisering
Motorización
Motorização

Motorizzazione
Моторизация
机动化

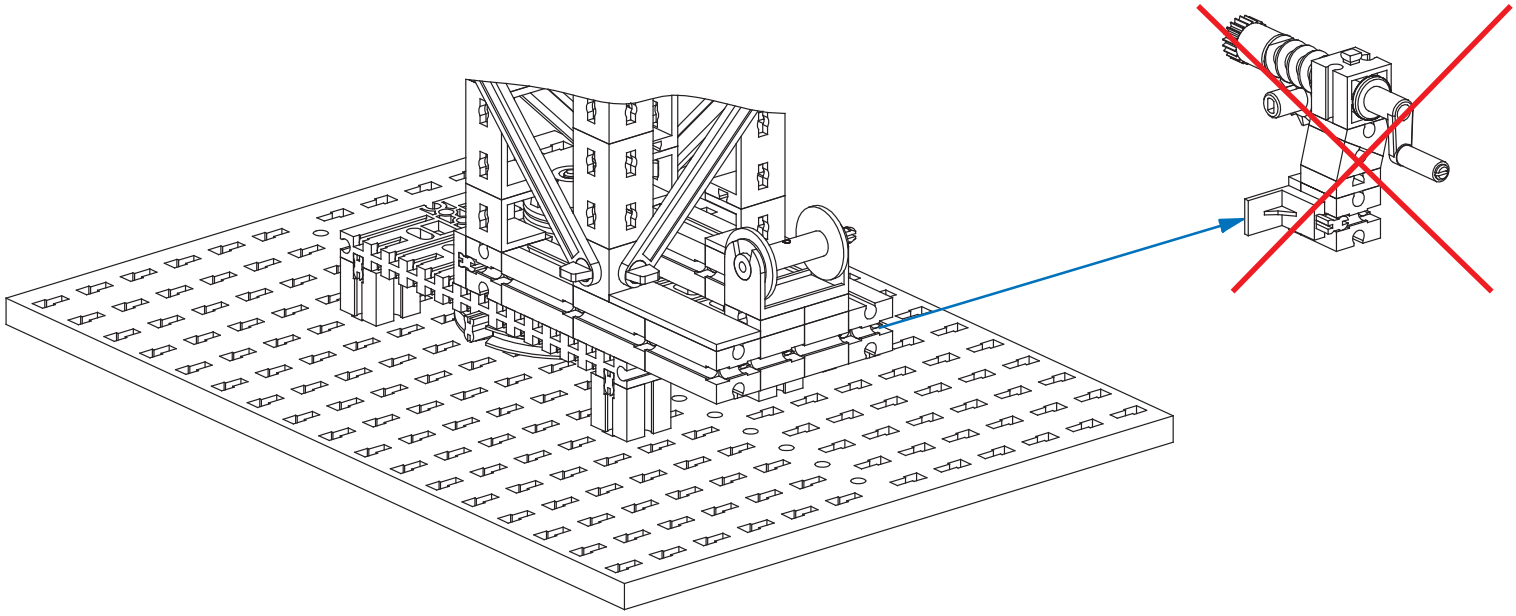

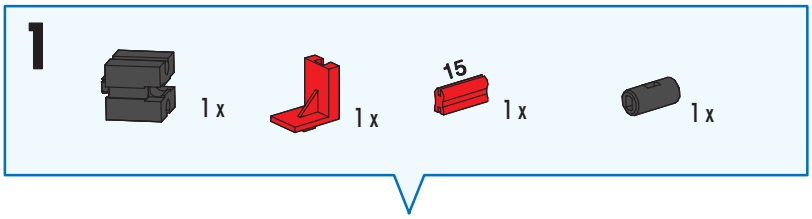

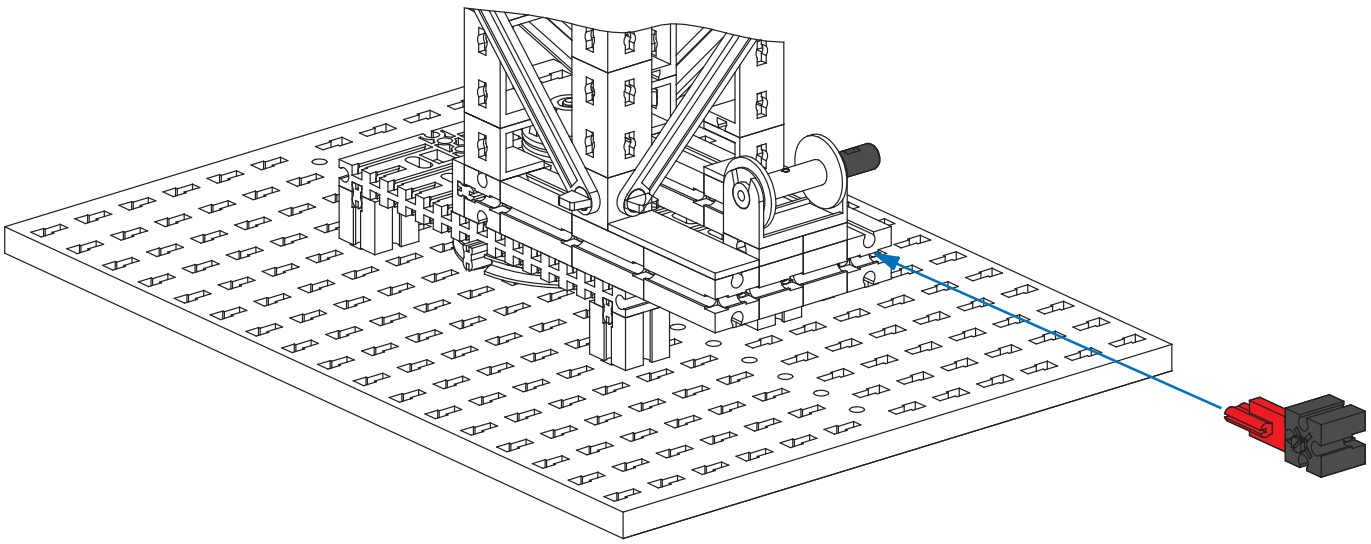

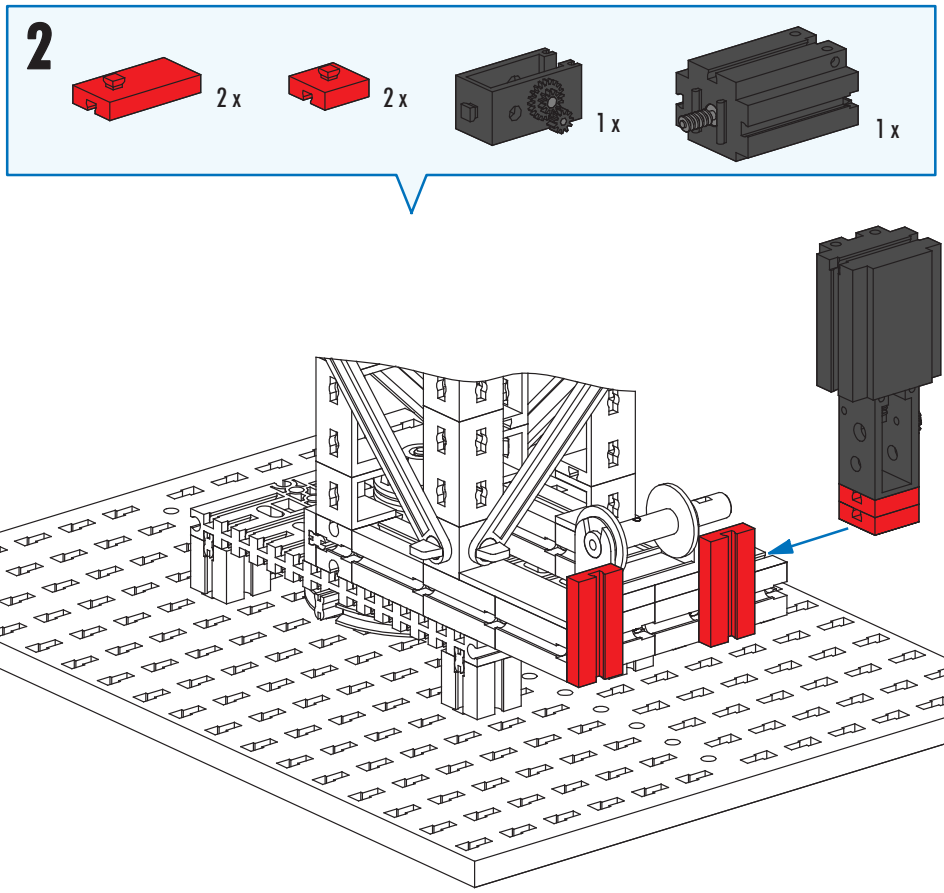
2
2 x
2 x
1 x
1 x

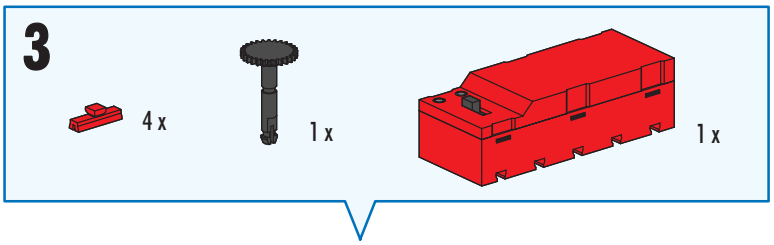
3
4 x
1 x
1 x

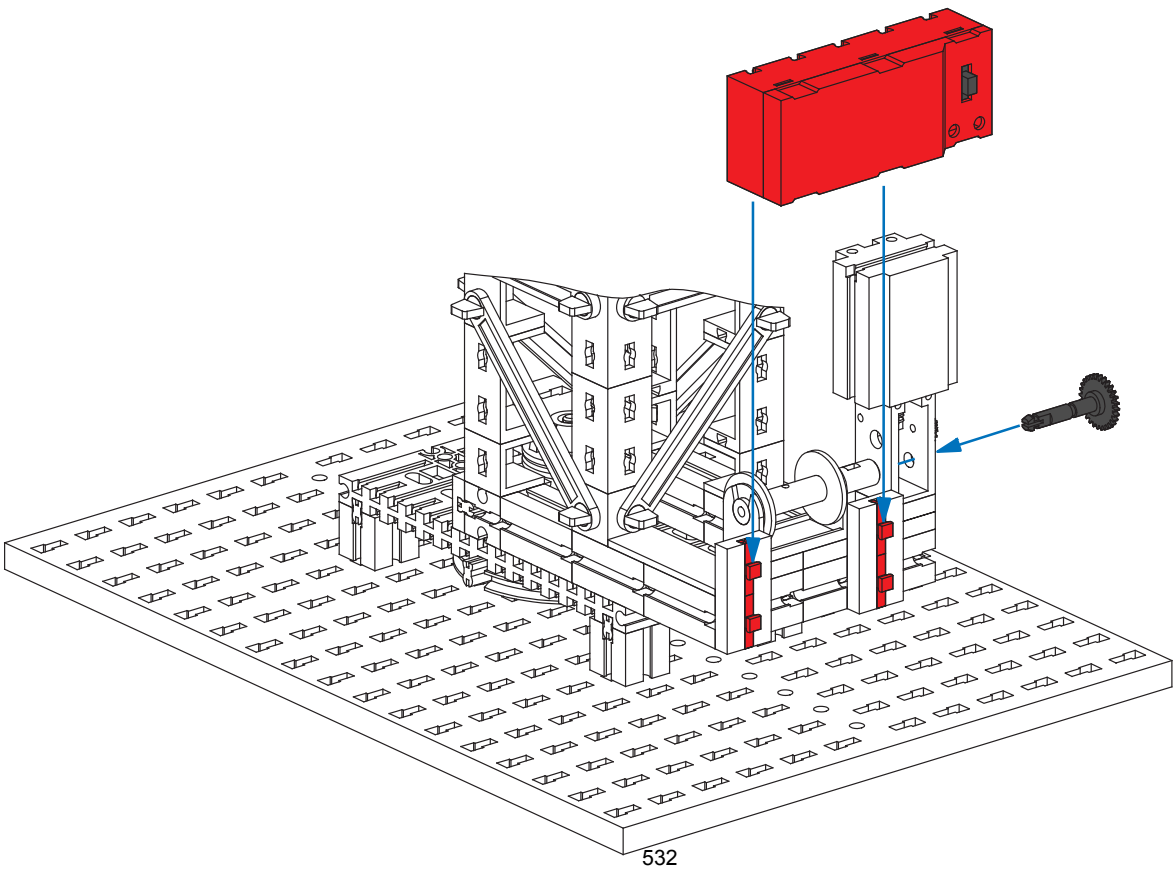

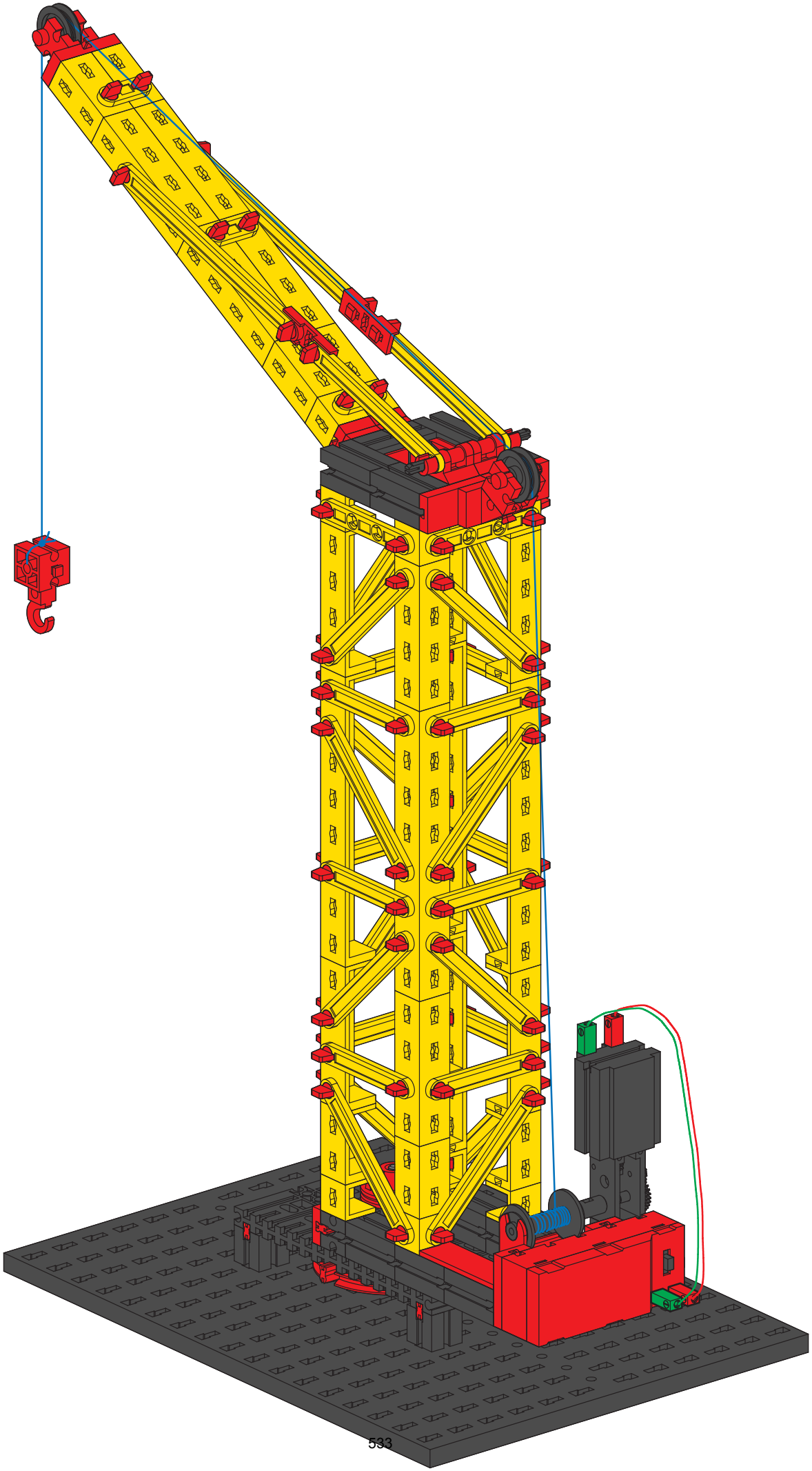

fischertechnik

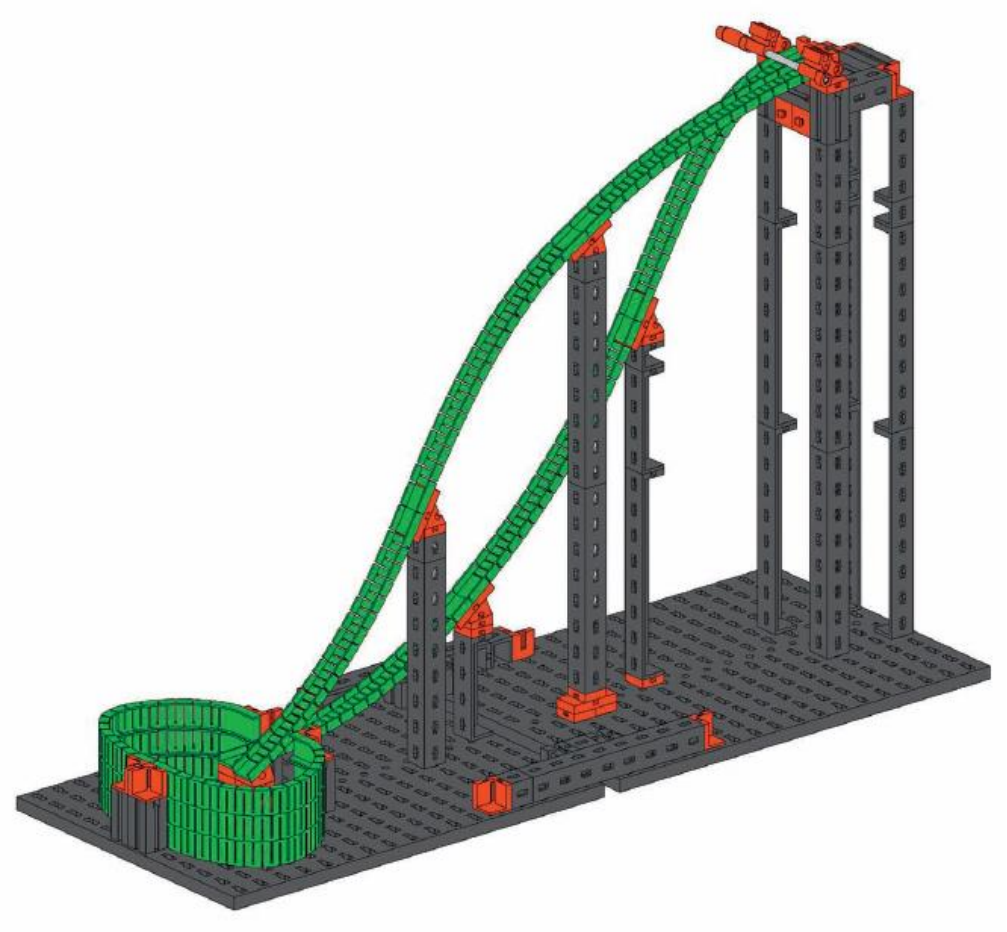

Physics I

Inhalt
Contents
Contenu
Inhoud
Contenido
Conteúdo
Contenuto
Содержание
目录

Einzelteilübersicht / Spare parts list / Liste des pièces détachées / Onderdelenoverzicht / Lista da piezas / Resumo de peça individual / Singoli componenti / Перечень деталей / 零件概览 2
Montagetipps / Tips for assembly / Tuyaux pour le montage / Montagetips / Consejos para el montaje / "Dicas" para montagem / Consigli per il montaggio / Советы по сборке / 装配建议 3

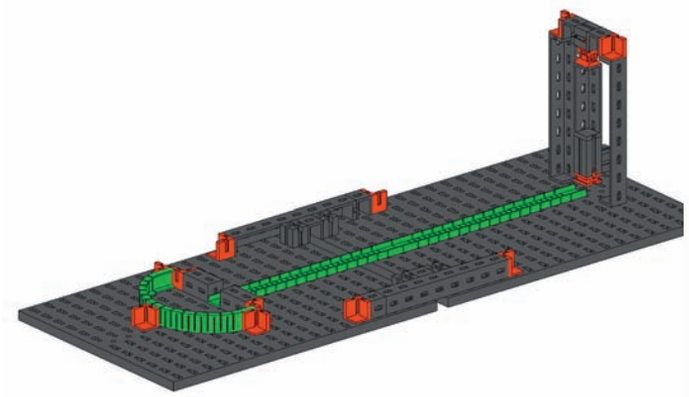

Versuchsmodell 1: ebene Bahn / Model for experiment 1: level track / Maquette d'essai 1: trajectoire plane / Testmodel 1: vlakke baan / Modelo de ensayo 1: carril nivelado / Modelo experimental 1: faixa plana / Modello sperimentale 1: pista piatta / Модель для опыта: ровный путь / 实验模型 1: 平轨道 5

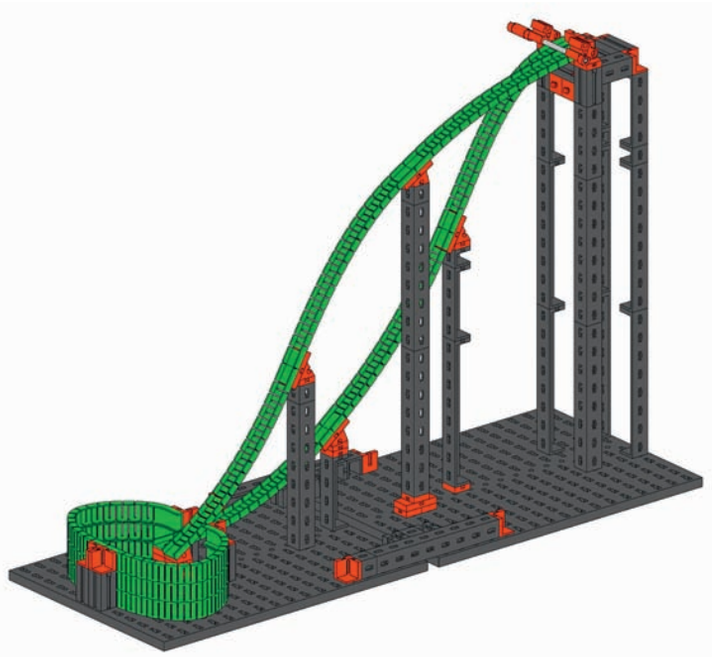

Versuchsmodell 2: Beschleunigungen / Model for experiment 2: acceleration / Maquette d'essai 2: accélérations / Testmodel 2: versnellingen / Modelo de ensayo 2: aceleraciones / Modelo experimental 2: acelerações / Modello sperimentale 2: accelerazioni / Модель для опыта 2: ускорения / 实验模型 2: 加速 8

Versuchsmodell 3: Looping / Model for experiment 3: looping / Maquette d'essai 3: looping / Testmodel 3: looping / Modelo de ensayo 3: looping / Modelo experimental 3: looping / Modello sperimentale 3: loop / Модель для опыта 3: мёртвая петля / 实验模型 3: 环绕.....18

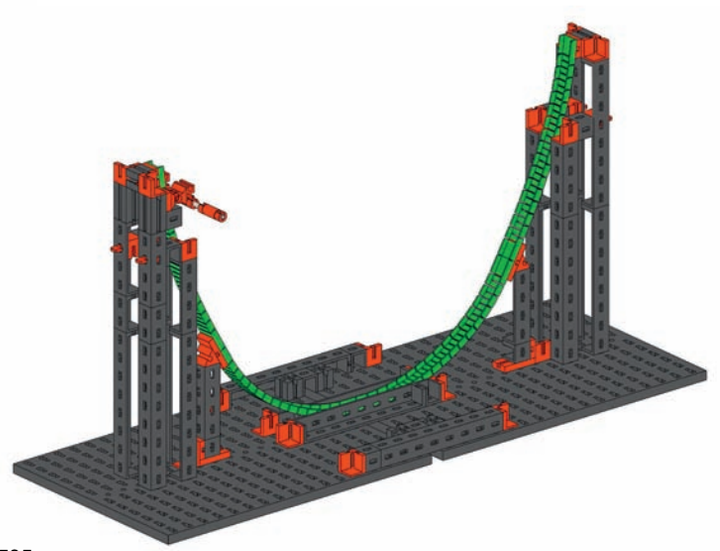

Versuchsmodell 4: Halfpipe / Model for experiment 4: half pipe / Maquette d'essai 4: half-pipe / Testmodel 4: halfpipe / Modelo de ensayo 4: medio cilindro / Modelo experimental 4: halfpipe / Modello sperimentale 4: halfpipe / Модель для опыта 4: хаф-пайп / 实验模型 4: 半管道.....22

Inhalt
Contents
Contenu
Inhoud
Contenido
Conteúdo
Contenuto
Содержание
目录

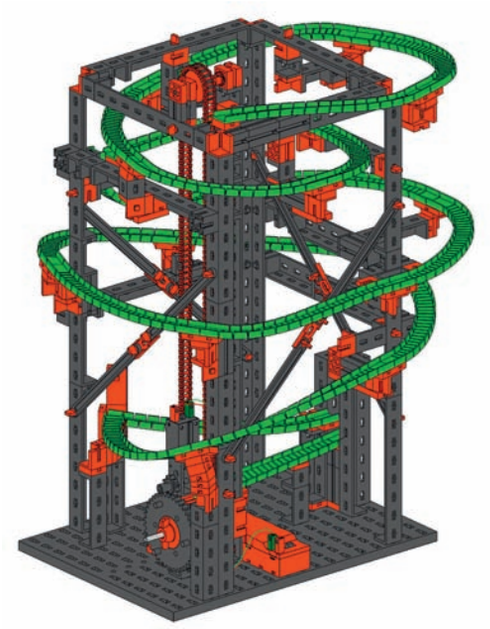

Parcours 1 / Obstacle course 1 / Parcours 1 / Parcours 1 /
Pista de recorrido 1 / Circuito 1 / Circuito 1 / Маршрут 1 /
滚珠弯道 1 31

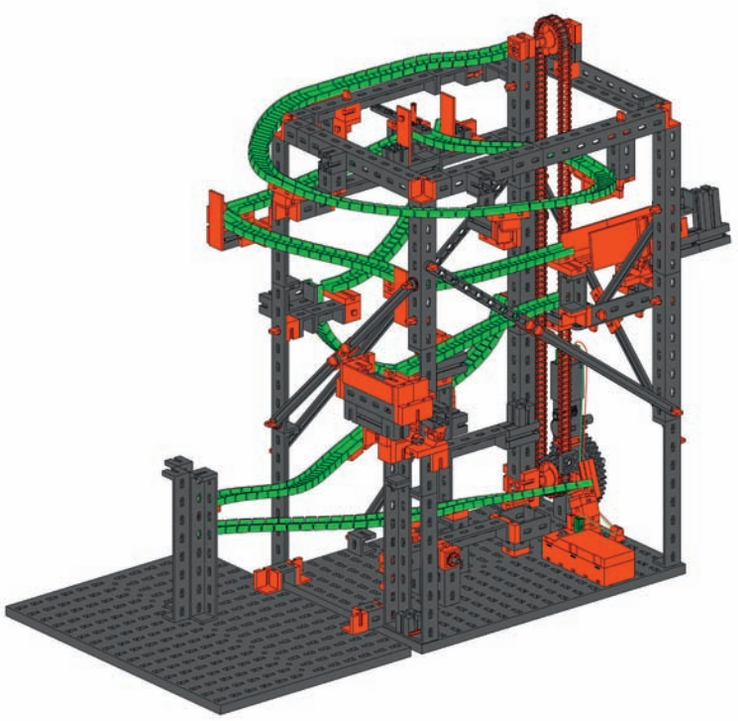

Parcours 2 / Obstacle course 2 / Parcours 2 / Parcours 2 /
Pista de recorrido 2 / Circuito 2 / Circuito 2 / Маршрут 2 /
滚珠弯道 2 47

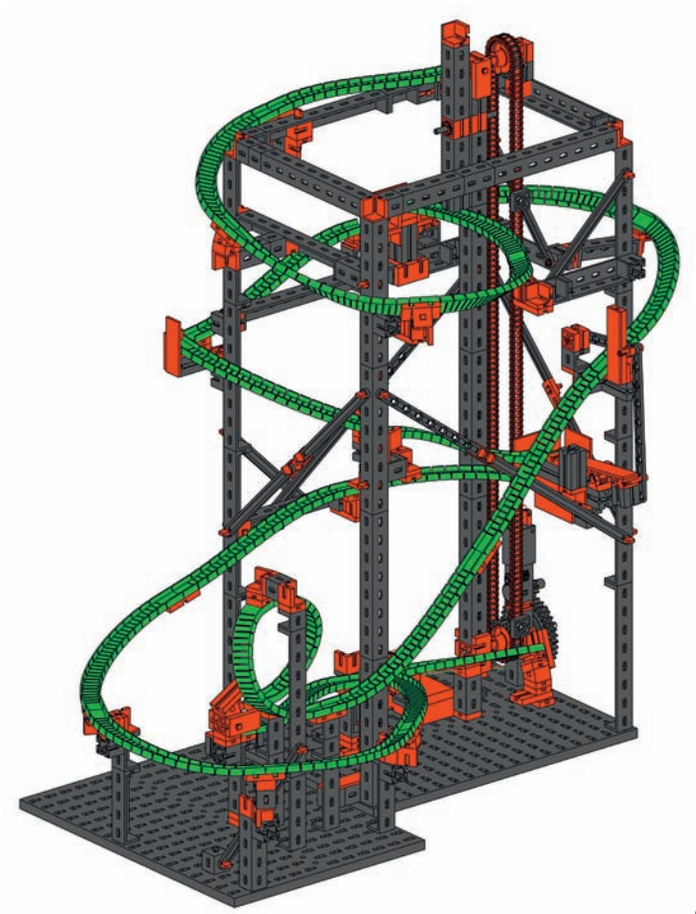

Parcours 3 / Obstacle course 3 / Parcours 3 / Parcours 3 /
Pista de recorrido 3 / Circuito 3 / Circuito 3 / Маршрут 3 /
滚珠弯道 3 68

Einzelteilübersicht
Spare parts list
Liste des pièces détachées

Onderdelenoverzicht
Lista da piezas
Resumo de peça individual

Singoli componenti
Перечень деталей
零件概览

	31 010 2 x
	31 011 9 x
	31 021 2 x
	31 022 1 x
	31 040 1 x
	31 058 3 x
	31 060 4 x
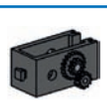	31 078 1 x
	31 082 1 x
	31 336 2 x
	31 337 2 x
	31 426 2 x
	31 436 2 x
	31 597 2 x
	31 602 1 x
	31 668 4 x
	31 690 3 x
	31 848 1 x
	31 981 10 x
	31 982 27 x
	31 983 2 x
	32 064 8 x
	32 071 16 x
	32 850 12 x
	32 879 15 x
	32 881 8 x
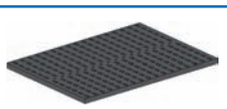	32 985 2 x
	35 031 3 x
	35 049 22 x
	35 057 8 x
	35 945 1 x
	35 969 2x
	36 248 220 x
	36 293 26 x
	36 323 30 x
	36 324 3 x
	36 334 10 x
	36 443 1 x
	36 920 18 x
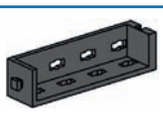	36 921 16 x
	36 922 13 x
	36 950 11 x
	36 952 2 x
	36 973 9 x
	36 977 1 x
	37 237 26 x
	37 468 12 x
	37 679 6 x
	38 240 39 x
	38 242 4 x
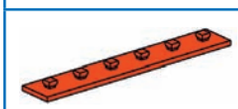	38 245 1 x
	38 246 1 x
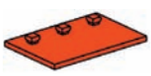	38 248 4 x
	38 416 3 x
	38 428 17 x
	38 464 1 x
	38 546 3 x
	119 753 2 x
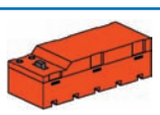	135 719 1 x
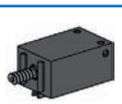	137 096 1 x
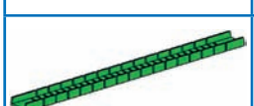	143 234 22 x
	119 850 3 x
	144 262 10 x

Montagetipps
Tips for assembly
Tuyaux pour le montage

Montagetips
Consejos para el montaje
"Dicas" para montagem

Consigli per il montaggio
Советы по сборке
装配建议

Kabel und Stecker
Plugs and cables
Fiches et des câbles

Stekkers en cables
Enchufes en cables
Cabos e contatos

Cavi e connettori
Провода и штекеры
电缆和插头

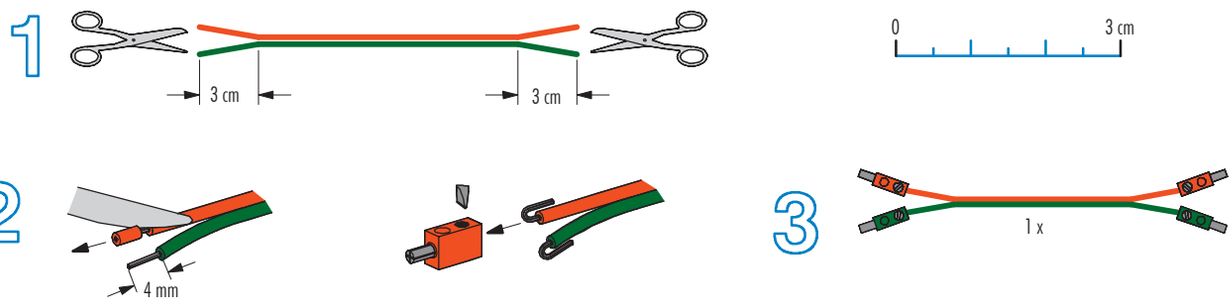

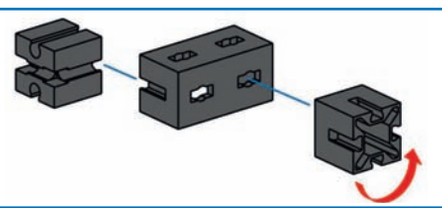

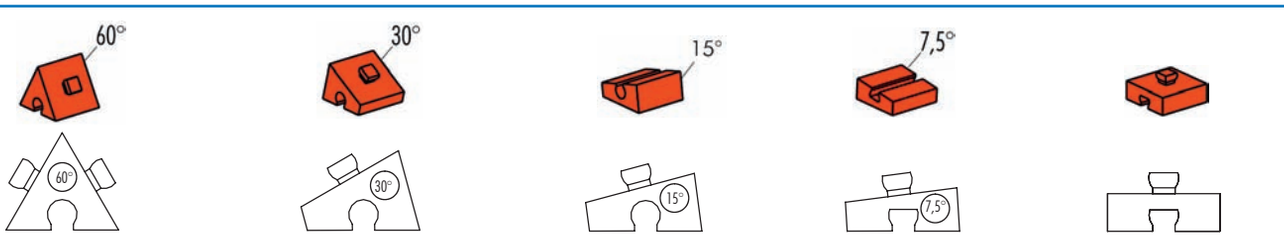

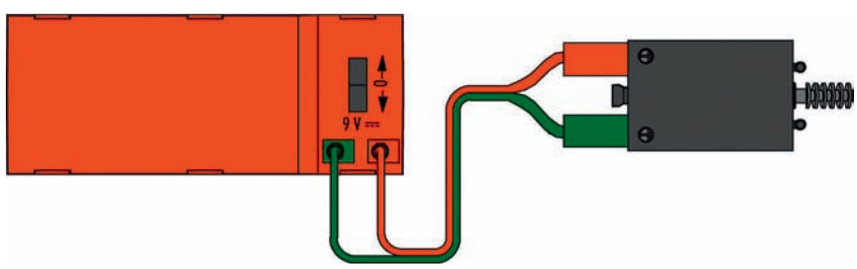

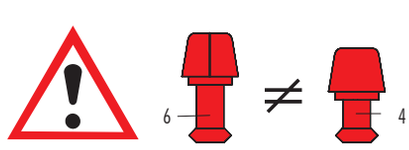

Erfinder Flexprofil Art.-Nr. 143 234:
Design und Konzeption Andreas Lehrberger

- Alle Einzelteile, insbesondere bewegliche Teile sind falls notwendig zu warten und zu reinigen.
- All components, especially moving parts, should be maintained and cleaned as necessary.
- Toutes les pièces détachées et en particulier les pièces mobiles, sont, si nécessaire, à entretenir et à nettoyer.
- Alle onderdelen, vooral de bewegende delen, kunnen, indien noodzakelijk, onderhouden en gereinigd worden.
- Es necesario limpiar y mantener en buen estado todas las diferentes piezas - especialmente las piezas móviles.
- Caso necessário, todas as peças individuais, especialmente peças móveis, tem que ser submetidas à manutenção e ser limpadas.
- Se necessario, tutti i singoli componenti, soprattutto le parti mobili, si devono eventualmente sottoporre a manutenzione e pulizia.
- Все детали, особенно подвижные, требуют ухода и чистки.
- 必要时应保养和清洁所有零件，尤指运动部件。

Sicherheitshinweise
Safety Information
Consignes de sécurité
Veiligheidsrichtlijnen
Indicaciones de seguridad
Observações sobre segurança
Informazioni per la sicurezza
Указания по технике безопасности
安全指南

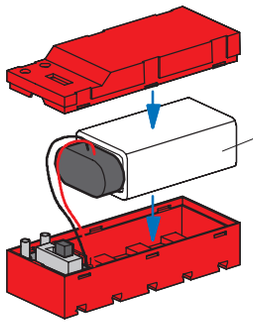

Batterie ist nicht Inhalt der Packung
Battery not included
Batterie non comprise
De batterij wordt niet meegeleverd
La bateria no está incluida en el suministro
A bateria não é o conteúdo da embalagem
La batteria non è inclusa nella confezione
Батарея в комплект не входит
包装中不含电池

1 Batterie 9Volt-Block Alkaline oder 1 NiMH-Akku 9V
- Nicht wiederaufladbare Batterien dürfen nicht geladen werden
- Aufladbare Batterien dürfen nur von Erwachsenen geladen werden
- Aufladbare Batterien sind aus dem Batteriehalter herauszunehmen, bevor sie geladen werden.
- Batterien müssen mit der richtigen Polarität eingelegt werden.
- Leere Batterien müssen aus dem Spielzeug herausgenommen werden
- Die Anschlussklemmen dürfen nicht kurzgeschlossen werden.
- Verbrauchte Batterien dem Sondermüll zuführen.
- Drähte nicht in Steckdose einführen!
- Ladegerät regelmäßig auf Schäden überprüfen.Bei einen Schaden darf das
- Ladegerät bis zur vollständigen Reparatur nicht mehr verwendet werden.

9V rechargeable battery or 9 V alkaline dry cell
- Do not attempt to charge NON-rechargeable batteries.
- Rechargeable batteries are only to be charged by adults.
- Take rechargeable batteries out of the battery tray before charging them.
- Insert batteries with the correct polarity.
- Remove dead batteries from the toy.
- Do not short circuit the connecting terminals!
- Discard spent dry cells at special waste disposal centre.
- Do not insert the wires into an outlet!
- Regularly inspect battery charger for damage.If the battery charger has been damaged, it should not be used further until fully repaired.

pile 9V où accu 9V
- Il est interdit de recharger des piles qui ne sont pas des accumulateurs
- Le chargement des accumulateurs doit toujours se faire par des adultes
- Retirer les accumulateurs du support de pile avant de les recharger.
- Veiller à la polarité correcte lors de la mise en place des piles.
- Retirer impérativement les piles ou accumulateurs vides du jouet.
- Il est interdit de court-circuiter les bornes de raccordement.
- Jeter les piles usagées dans un conteneur spécial réservé à cet effet.
- Ne pas introduire les fils dans une prise !
- Contrôlez régulièrement le chargeur en vue d'éventuelles détériorations
- En cas de détérioration, il est interdit d'utiliser le chargeur jusqu'à ce qu'il ait été intégralement réparé

alkaline batterije of oplaadbare batterije (9Volt)
- Niet-oplaadbare batterijen mogen niet worden opgeladen.
- Oplaadbare batterijen mogen uitsluitend door volwassenen worden opgeladen.
- Oplaadbare batterijen moeten uit de batterijhouder worden verwijderd, voordat deze worden opgeladen.
- De batterijen moeten met de juiste polariteit worden geplaatst.
- Lege batterijen moeten uit het speelgoed worden verwijderd.
- De aansluitklemmen mogen niet worden kortgesloten.
- Afleveren gebruikte batterijen bij het klein chemisch afval (KCA).
- Geen draden in de contactdoos steken!
- Laadtoestel regelmatig controleren op schade.Bij schade mag het laadtoestel niet meer gebruikt worden tot het volledig hersteld is.

pila alcalina bloque de 9 Voltios o acumulador NiMH- de 9 Voltios
- Las pilas no recargables no pueden ser cargadas
- Las pilas recargables sólo pueden ser cargadas por un adulto
- Las pilas recargables deben ser extraídas del compartimiento de pilas antes de que sean cargadas.
- Las pilas deben ser colocadas con la polaridad correcta.
- Las pilas descargadas deben ser extraídas del juguete
- Los bornes de conexión no pueden ser puestos en cortocircuito.
- Retirar las baterías viejas, desechándolas en un depósito de basuras especiales.
- No introducir hilos en la toma de corriente!
- Comprobar con regularidad si el cargador presenta daños.En caso de presentar daños, el cargador no debe volver a ser utilizado hasta que esté completamente reparado.

Bateria alcalina de bloco de 9 V ou acumulador NiMH- de 9 V
- Pilhas não recarregáveis não devem ser novamente carregadas.
- Pilhas recarregáveis somente devem ser recarregadas por adultos.
- Pilhas recarregáveis devem ser retiradas do compartimento de pilhas antes de serem carregadas.
- As pilhas devem ser colocadas com a polaridade correta.
- As pilhas descarregadas devem ser retiradas do brinquedo.
- Os terminais de conexão não devem ser curto-circuitados.
- Eliminar as baterias esgotadas como desperdício perigoso
- Nunca introduzir fios na tomada!
- Verificar regularmente se o carregador apresenta danos.Em caso de dano, o carregador não deverá ser utilizado enquanto não estiver plenamente consertado.

1 batteria alcalina da 9 V o 1 batteria NiMH- ricaricabile da 9V
- Le batterie non ricaricabili non devono essere ricaricate
- Le batterie ricaricabili devono essere ricaricate da persone adulte
- Le batterie ricaricabili si devono estrarre dal supporto prima di ricaricarle.
- Le batterie si devono inserire rispettando la polarità.
- Togliere le batterie dal giocattolo quando sono scariche
- I morsetti di allacciamento non devono essere cortocircuitati.
- Smaltire le batterie usate negli appositi contenitori per la raccolta differenziata.
- Non inserire i fili nella presa elettrica.
- Controllare periodicamente se il caricabatterie presenta dei danni.In caso di danni, il caricabatterie non deve più essere utilizzato fino alla riparazione.

1 алкалиновая батарейка на 9 В или 1 никель-кадмиевый аккумулятор, 9 В
- Не пытайтесь заряжать неперезаряжаемые батарейки.
- Зарядку перезаряжаемых аккумуляторов разрешается выполнять только взрослым.
- Перед зарядкой перезаряжаемых аккумуляторов извлеките их из аккумуляторного отсека.
- При установке аккумуляторов на место соблюдайте полярность.
- Разряженные батарейки необходимо извлечь из игрушки.
- Не замыкайте накоротко соединительные клеммы.
- Использованные батареи утилизовать как спецотходы.
- Не вставляйте в розетку провода!
- Регулярно проверяйте зарядное устройство на отсутствие повреждений.При налиРии повреждений использовать зарядное устройство до выполнения его полного ремонта не разрешается.

1 个 9V 的碱性方电池或 1 个 9V 的 NiMH- 蓄电池
- 不得给非充电电池充电
- 只允许由成年人给充电电池充电
- 在充电前必须将充电电池从电池夹中取出。
- 必须按照正负极正确放入电池。
- 必须从玩具中取出没有电的电池
- 接线柱不允许被短路。
- 用完了的电池应作为特种垃圾处理。
- 禁止将金属丝插入插座！
- 经常检查充电器是否有损坏情况。如果充电器有损，直到完全修好为止不 可以再使用。

- Alle elektrischen Bauteile (Motoren, Lampen) dürfen ausschließlich an Stromversorgungen von fischertechnik angeschlossen werden.
- No electrical components (motors, lamps) are to be connected to any other power supply than that provided by fischertechnik.
- Tous les composants électriques (moteurs, lampes) ne doivent être branchés aux alimentations électriques uniquement que par la société Fischertechnik.
- Alle elektrische componenten (motoren, lampen) mogen uitsluitend op stroomvoorzieningen van fischertechnik worden aangesloten.
- Todos los componentes eléctricos (motores, luces) deben conectarse a la alimentación de corriente de la técnica Fischer exclusivamente.
- Todas as peças componentes elétricas (motores, lâmpadas) só podem ser exclusivamente conectadas em abastecimentos de corrente da Fischertechnik.
- Tutti i componenti elettrici (motori, lampadine) devono essere collegati esclusivamente ad alimentatori fischertechnik.
- Все электрические детали (электромоторы, лампочки.) можно подключать только к источникам электропитания от fischertechnik.
- 只允许将所有电气部件 (传感器，电机，灯泡) 与慧鱼技术产品的电源装置相连接

- Achtung! Verletzungsgefahr an Bauteilen mit funktionsbedingten scharfen Kanten und Spitzen!
- Caution! Be careful not to hurt yourself on components with sharp or pointed edges!
- Attention! Risque de blessure sur les élements comportant des arêtes et o pointes vives indispensables au bon fonctionnement!
- Let op! U kunt zich bezeren aan bouwstenen met sherpe randen of punten!
- Attenzione! Esiste il pericolo di lesione con i pezzi di costruzione che hanno bordi e punte spigolosi necessari per la funzionalita del pezzo!
- Atenção! Perigo de ferimentos em peças componentes com cantos vivos e pontas obrigatórios para o funcionamento !
- Attenzione! Pericolo di lesioni dovute a componenti con spigoli vivi e punte per motivi funzionali!
- Будьте осторожны! Об острые края деталей и и наконечники можно порезаться!
- 注意！
因功能需要而带有锋利的棱边和尖角的部件可能会带来受伤危险！

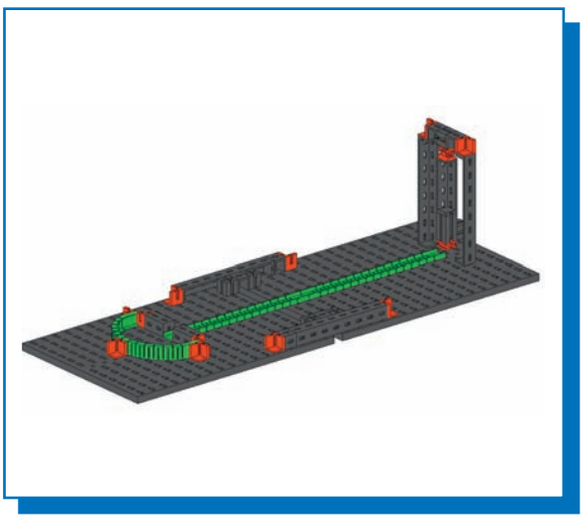

Versuchsmodell 1
Model for experiment 1
Maquette d'essai 1
Testmodel 1
Modelo de ensayo 1
Modelo experimental 1
Modello sperimentale 1
Модель для опыта 1
实验模型 1

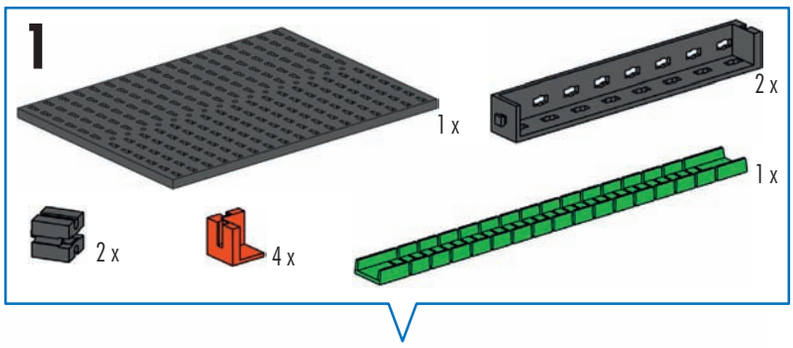

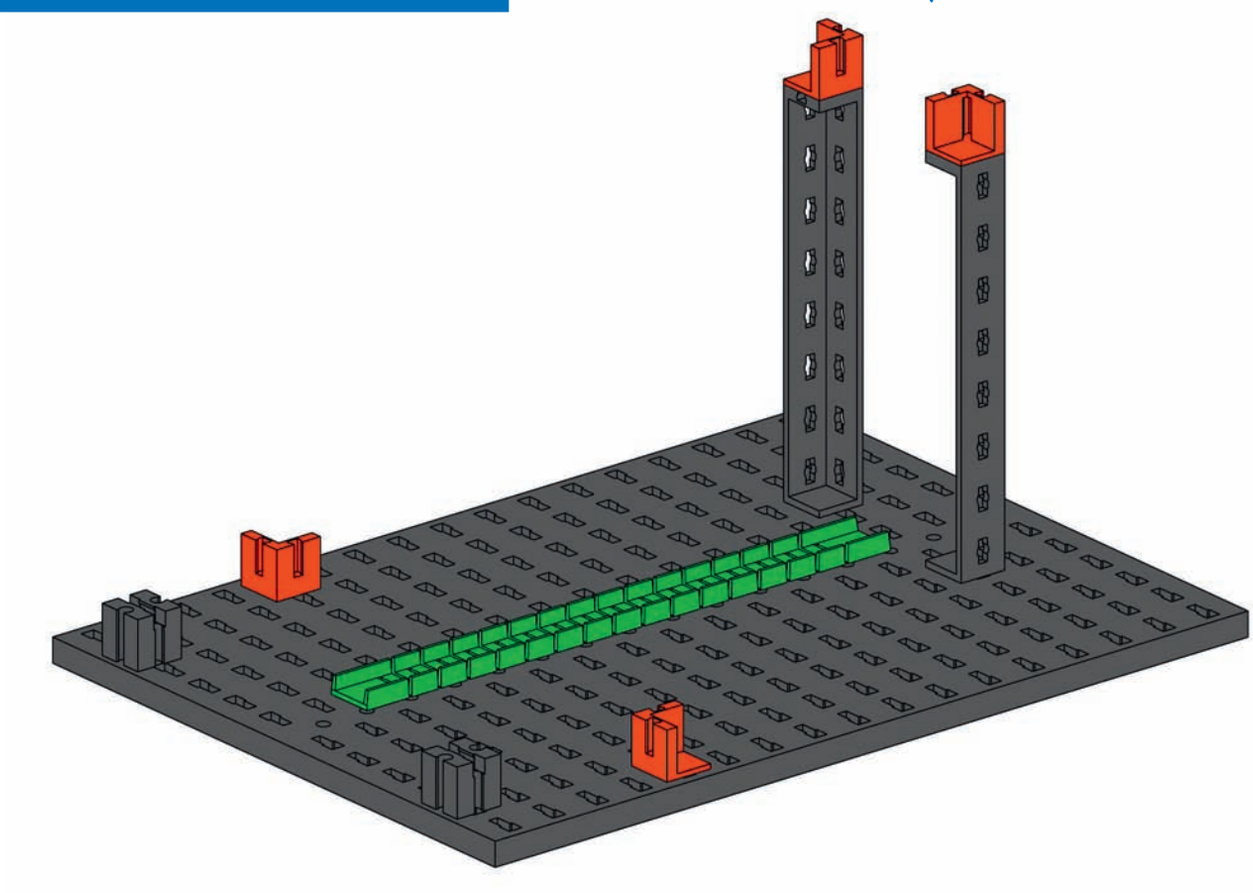

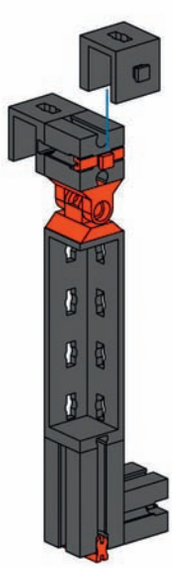

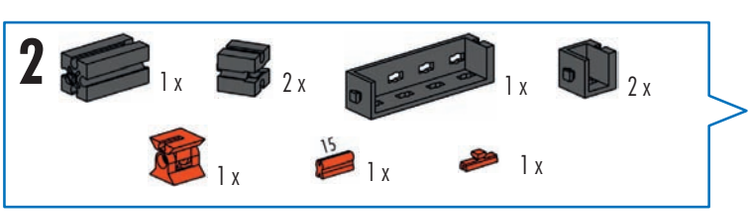

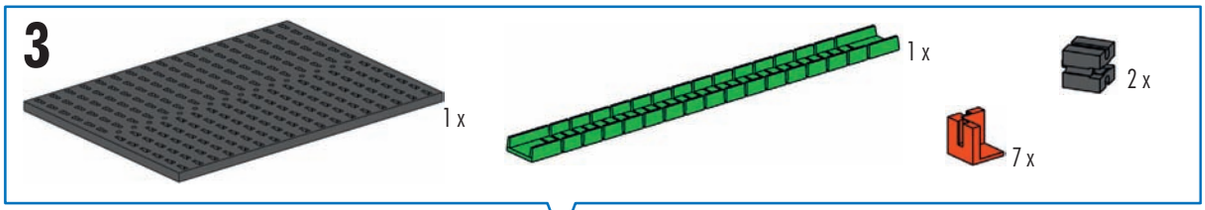
3
1 x
1 x
2 x
7 x

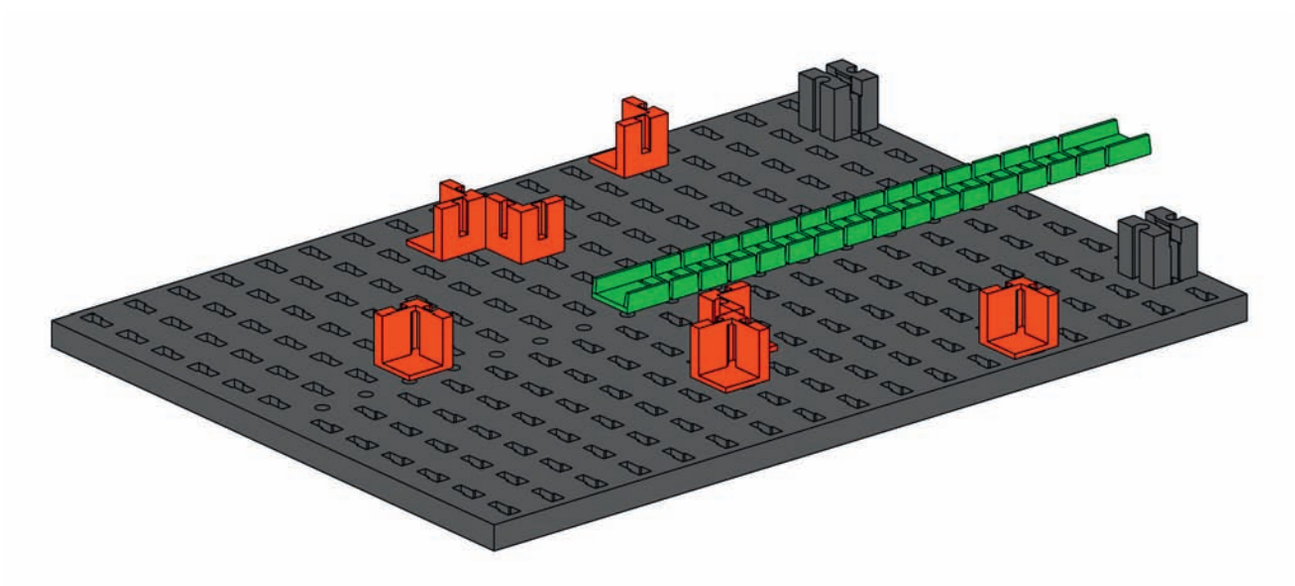

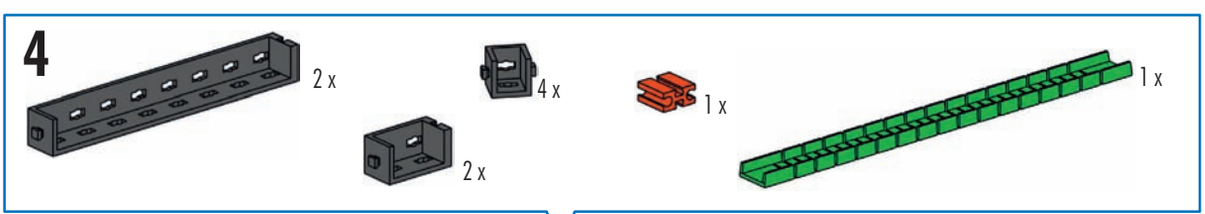
4
2 x
4 x
1 x
1 x
2 x

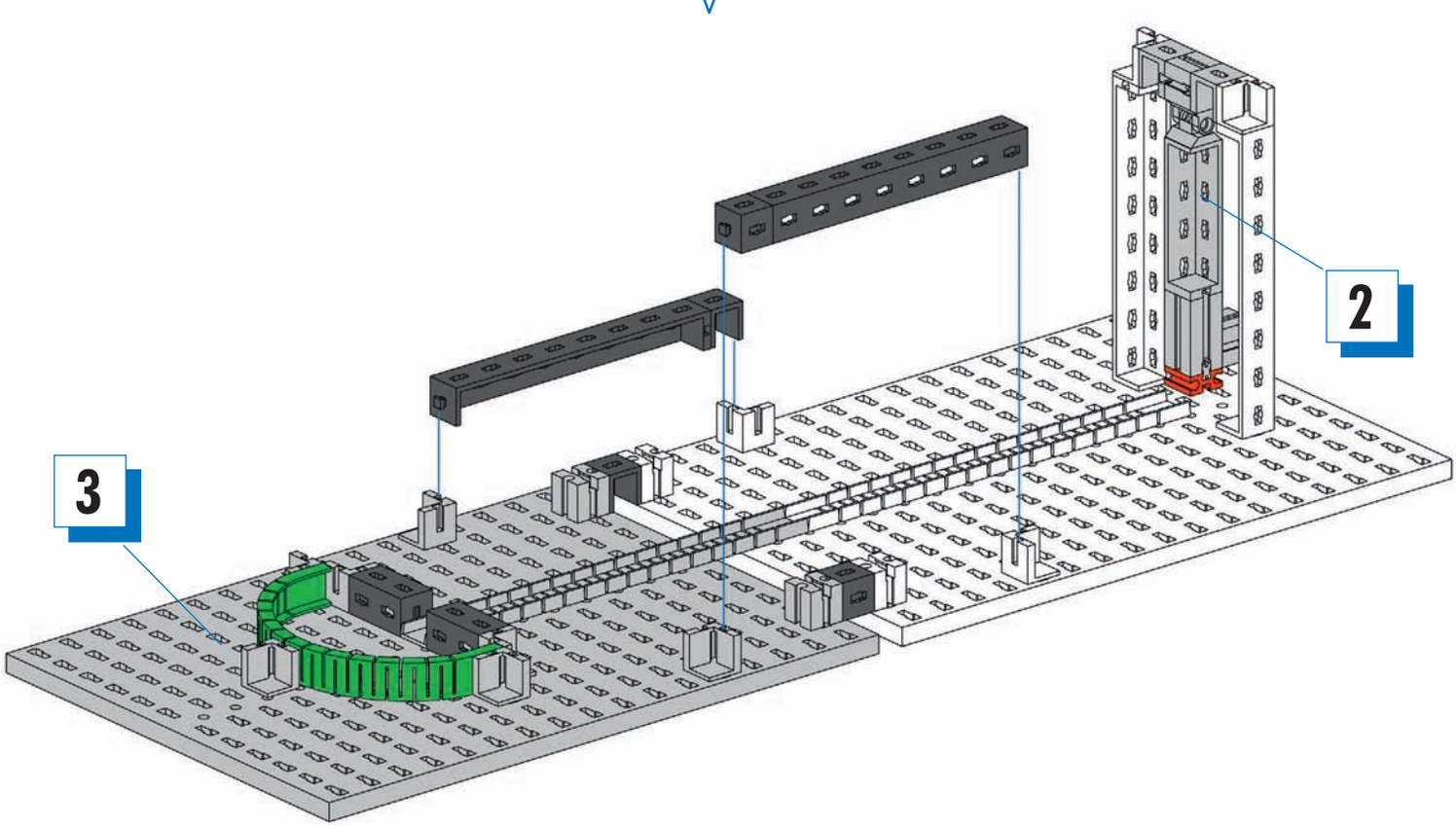
2
3

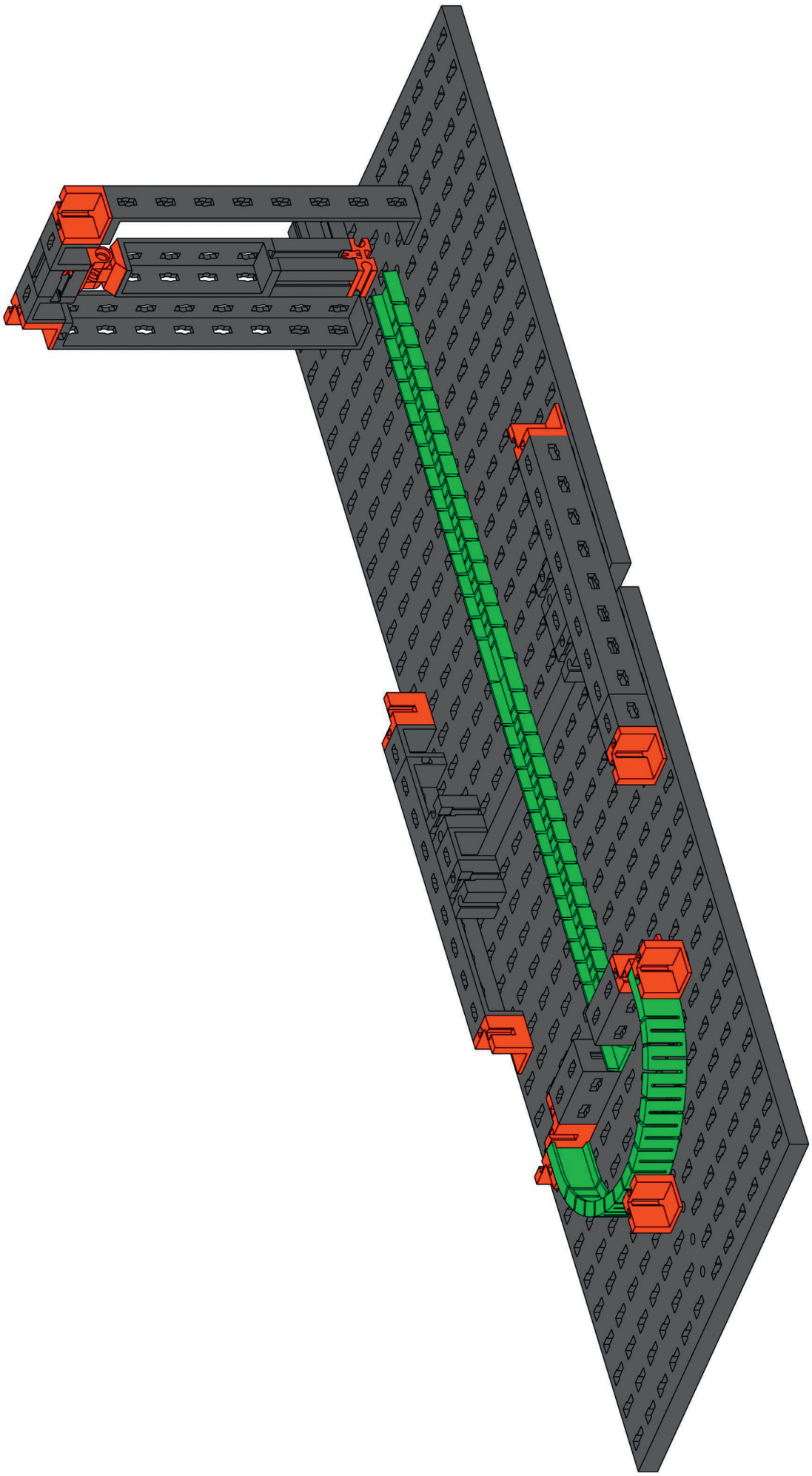

Versuchsmodell 2
Model for experiment 2
Maquette d'essai 2

Testmodel 2
Modelo de ensayo 2
Modelo experimental 2

Modello sperimentale 2
Модель для опыта 2
实验模型 2

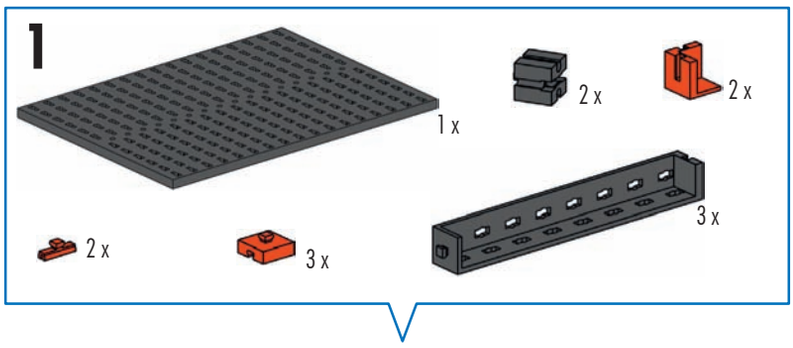

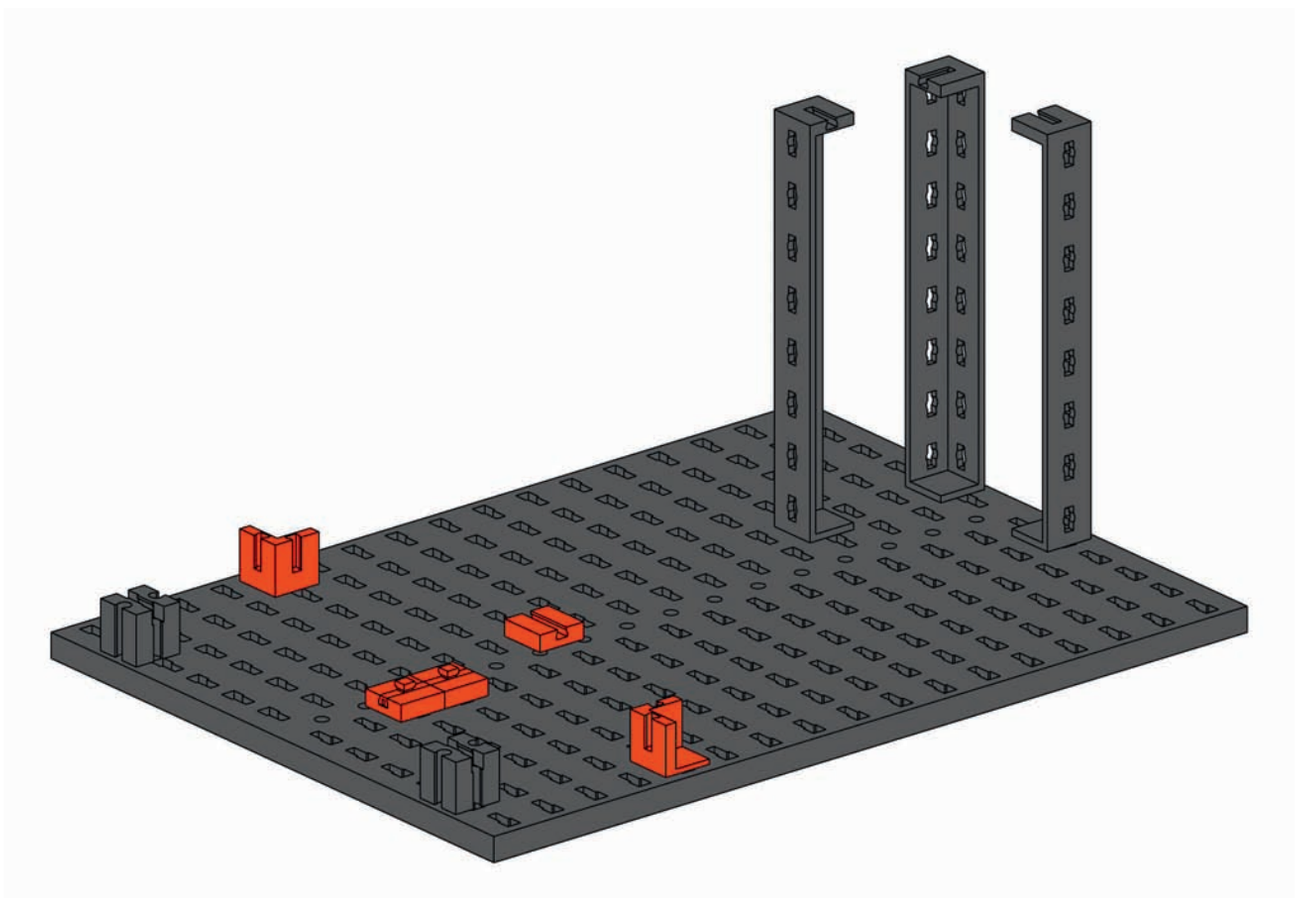

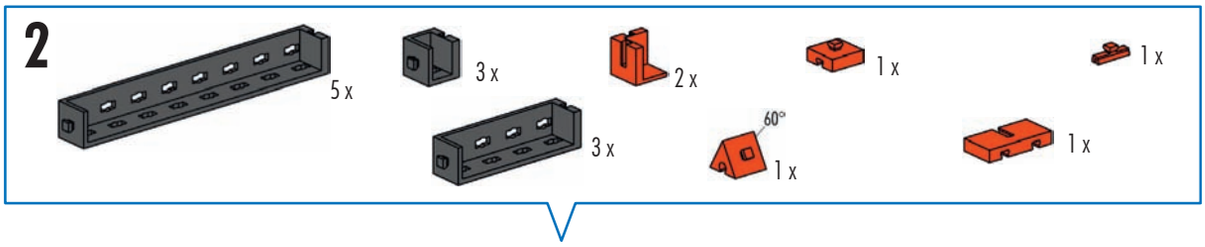
2
5 x
3 x
2 x
1 x
1 x
3 x
60°
1 x
1 x

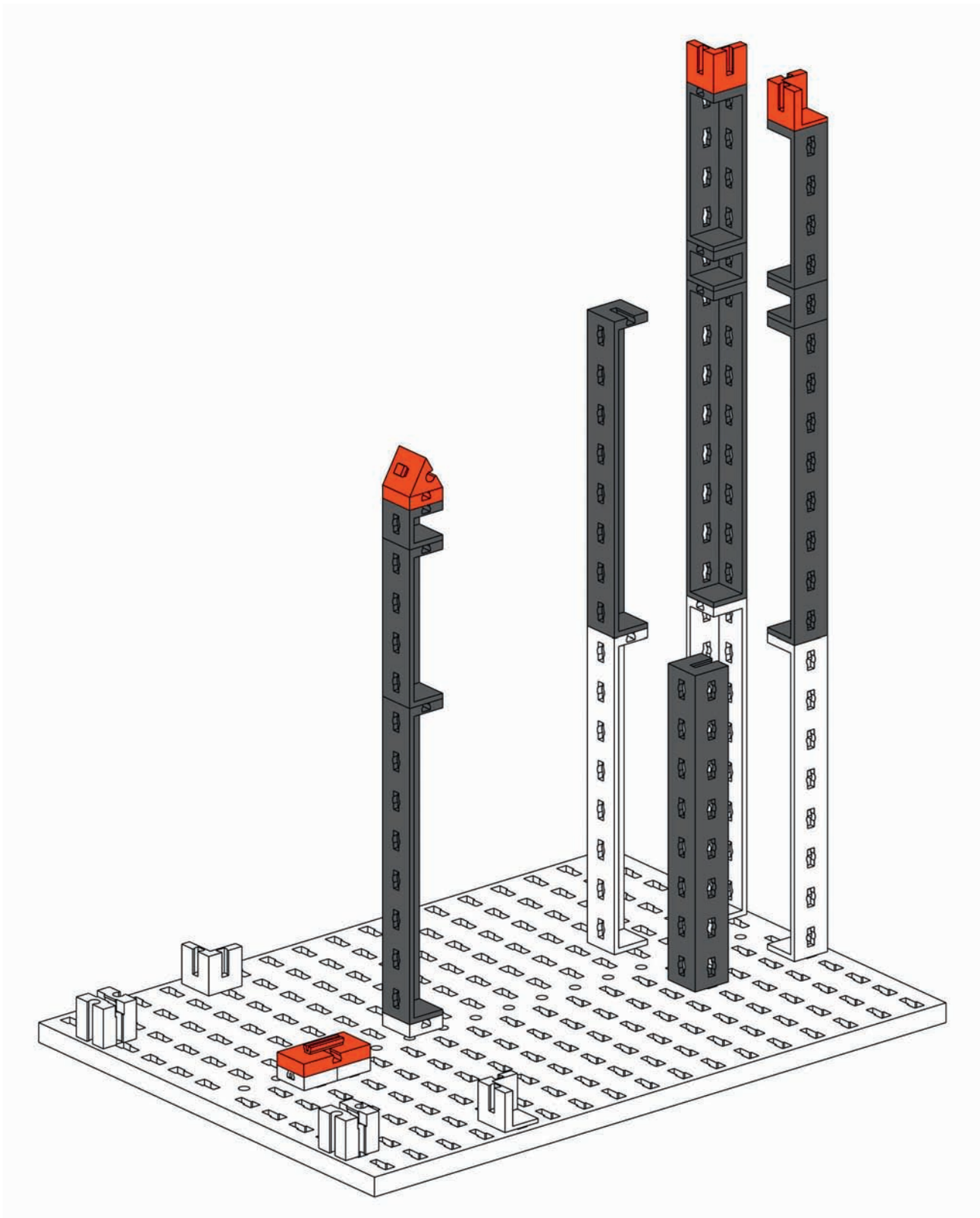

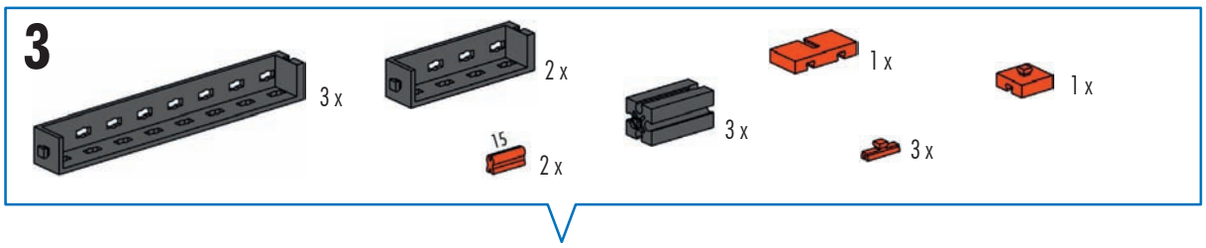
3
3 x
2 x
15
2 x
3 x
1 x
3 x
1 x

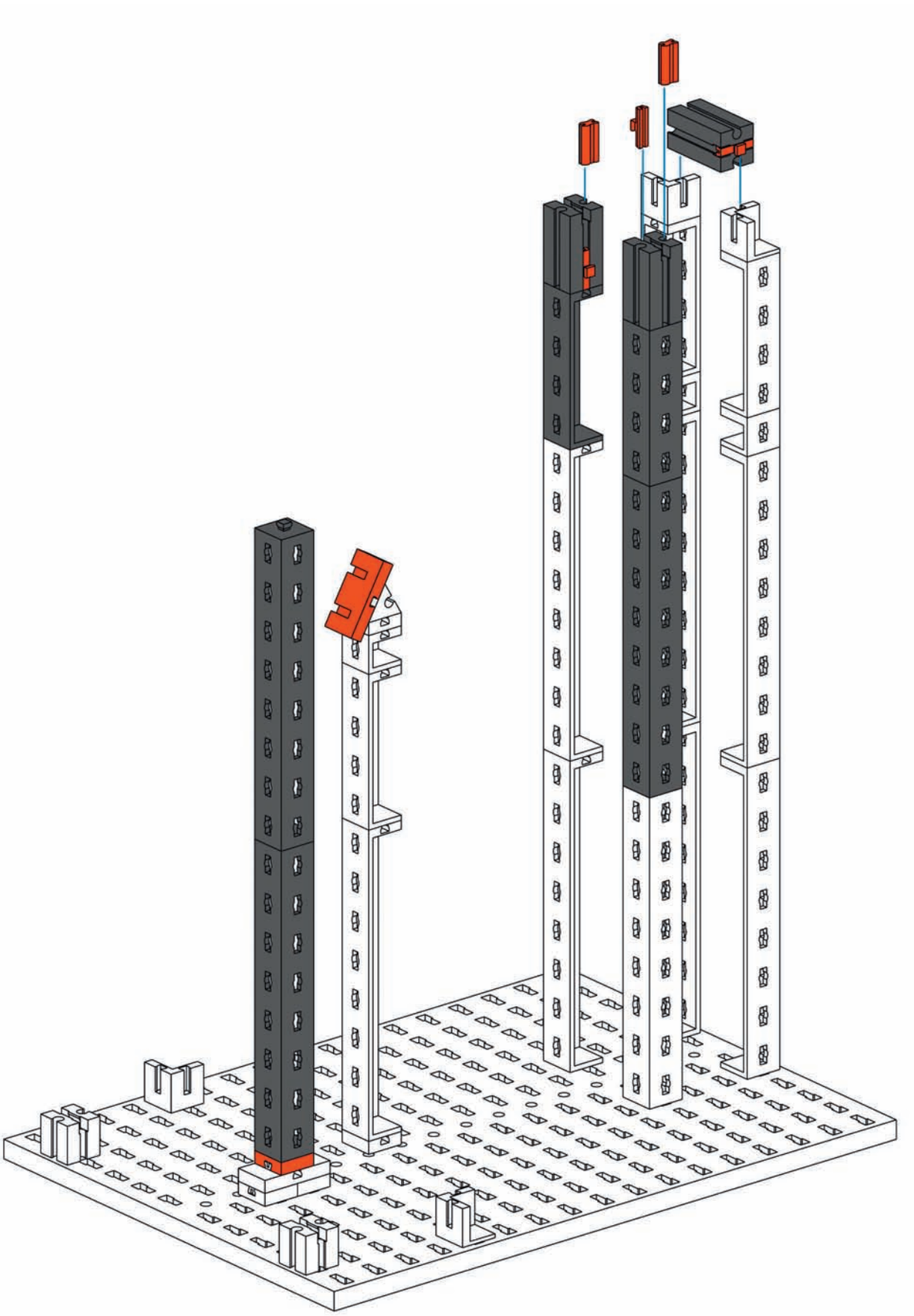

4

1 x 2 x 1 x 2 x 30° 1 x 7,5° 2 x 2 x 3 x 1 x

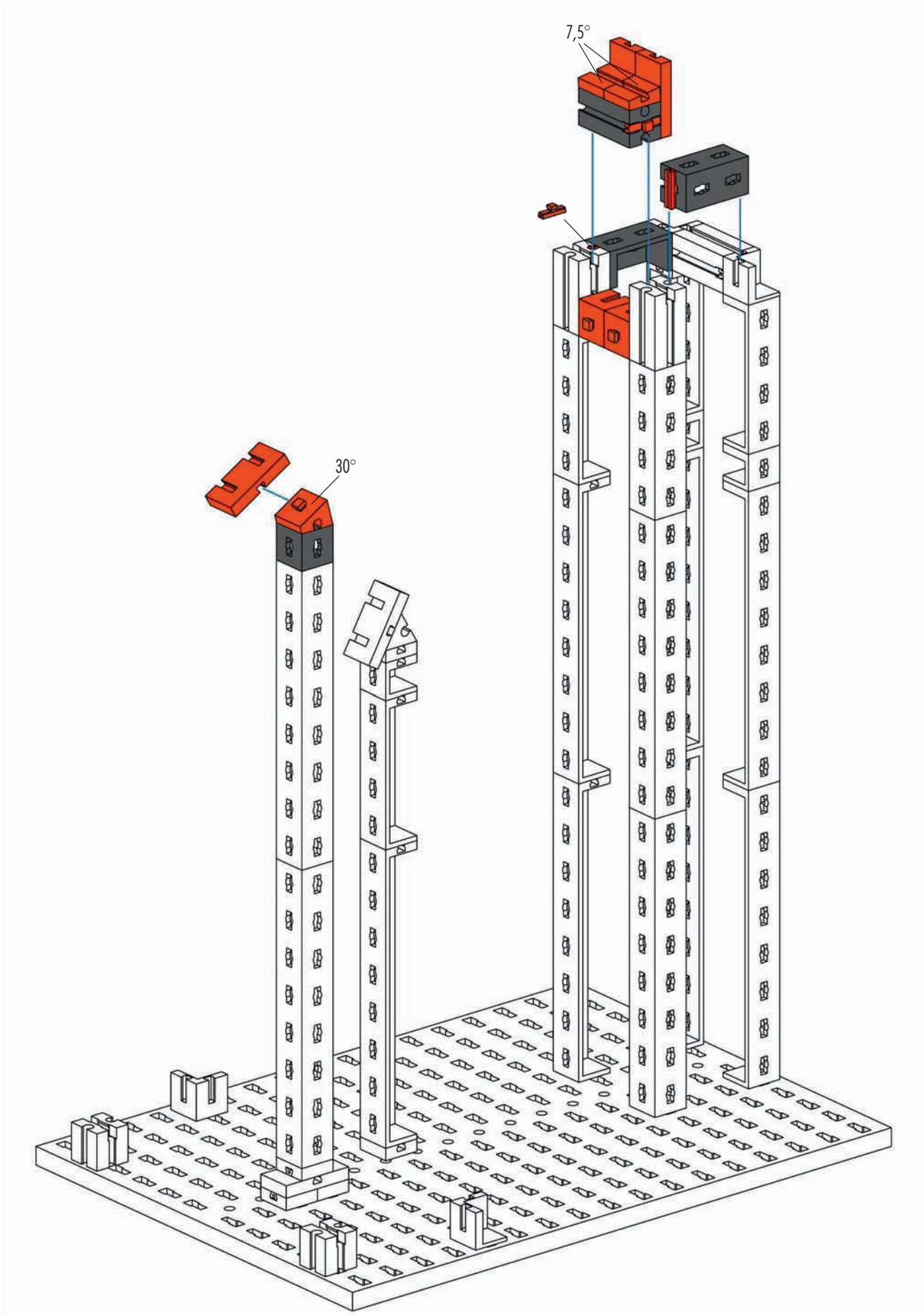

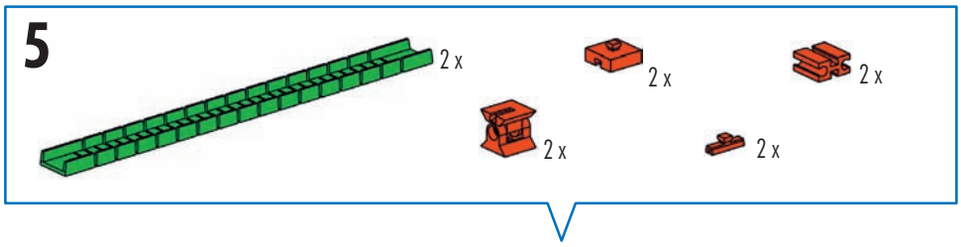
5
2 x
2 x
2 x
2 x
2 x

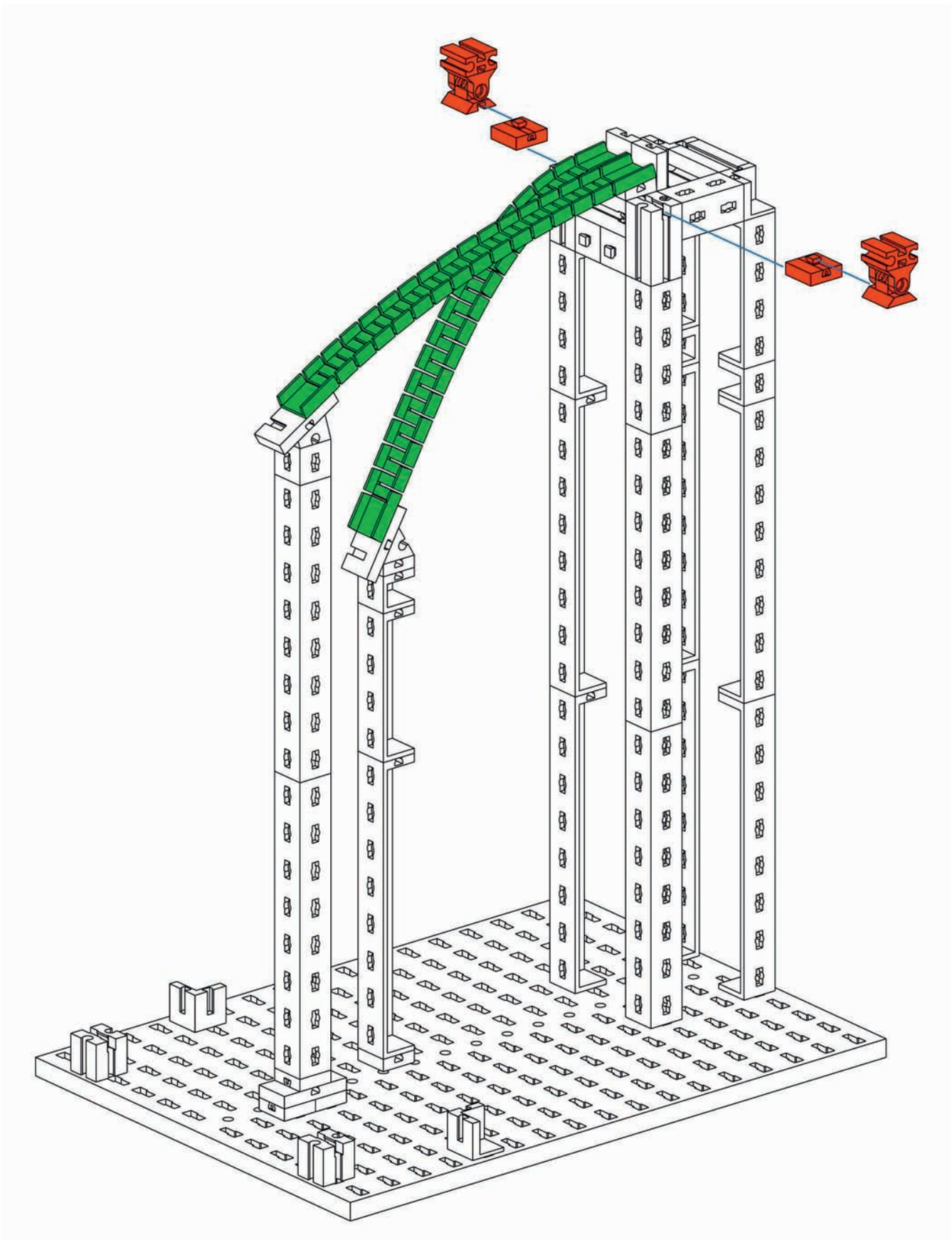

6

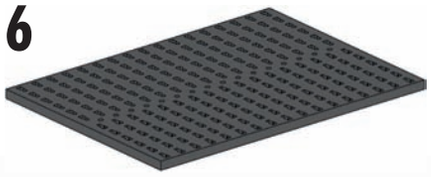

1 x

4 x

2 x

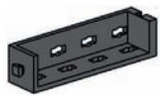

1 x

2 x

1 x

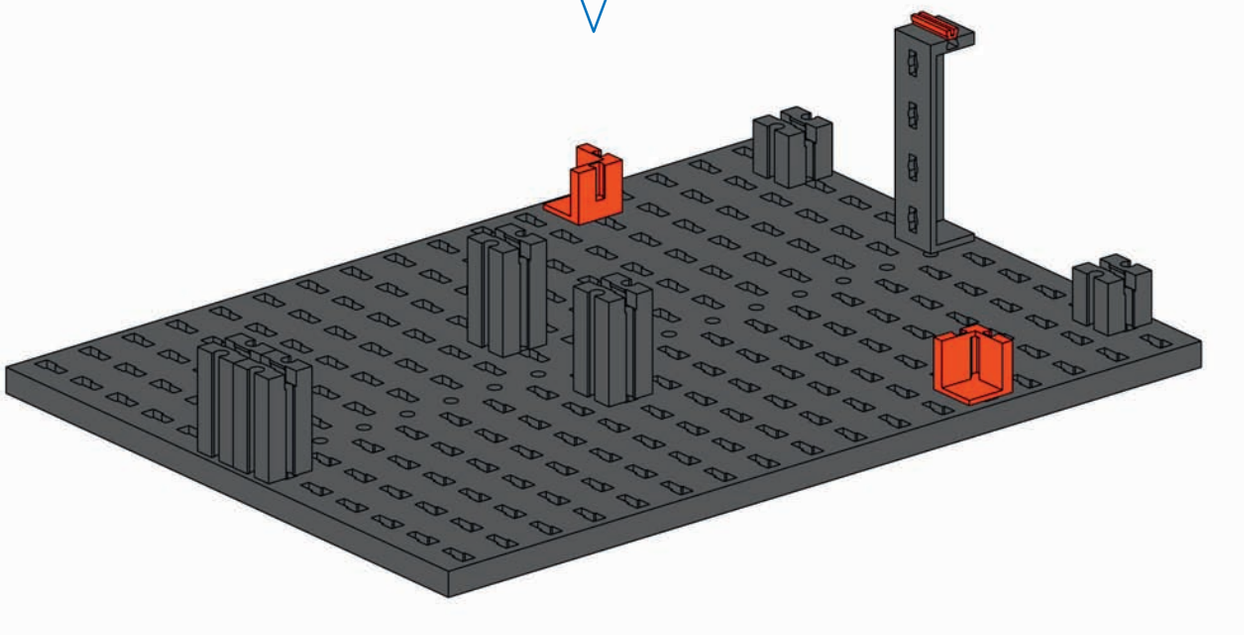

7

1 x

1 x

1 x

2 x

2 x

1 x

4 x

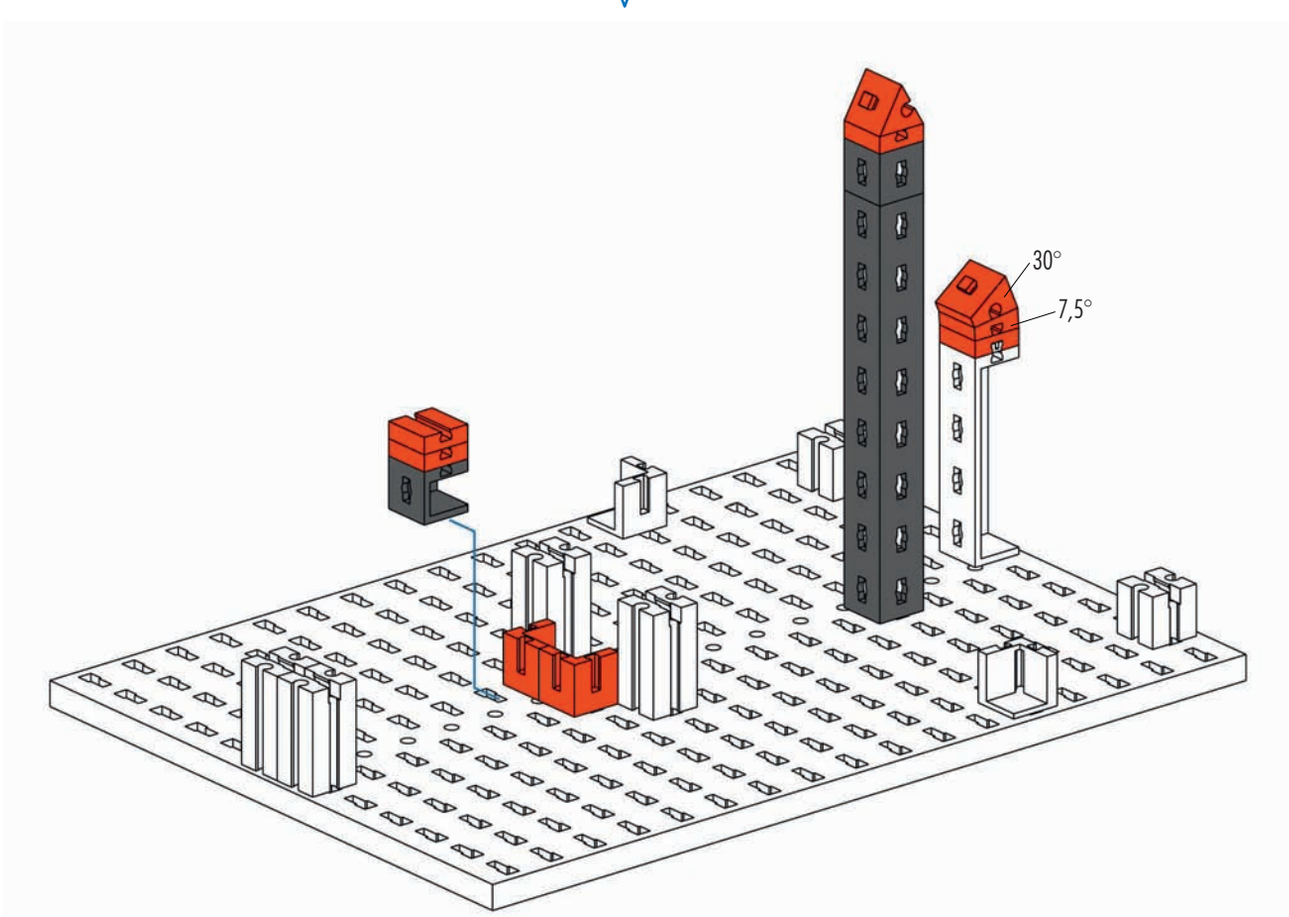

548

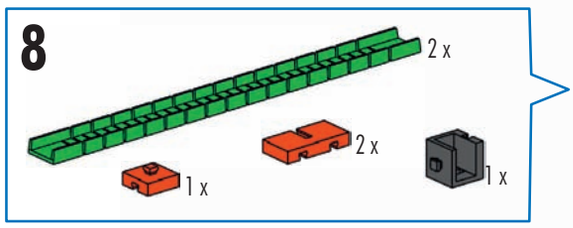

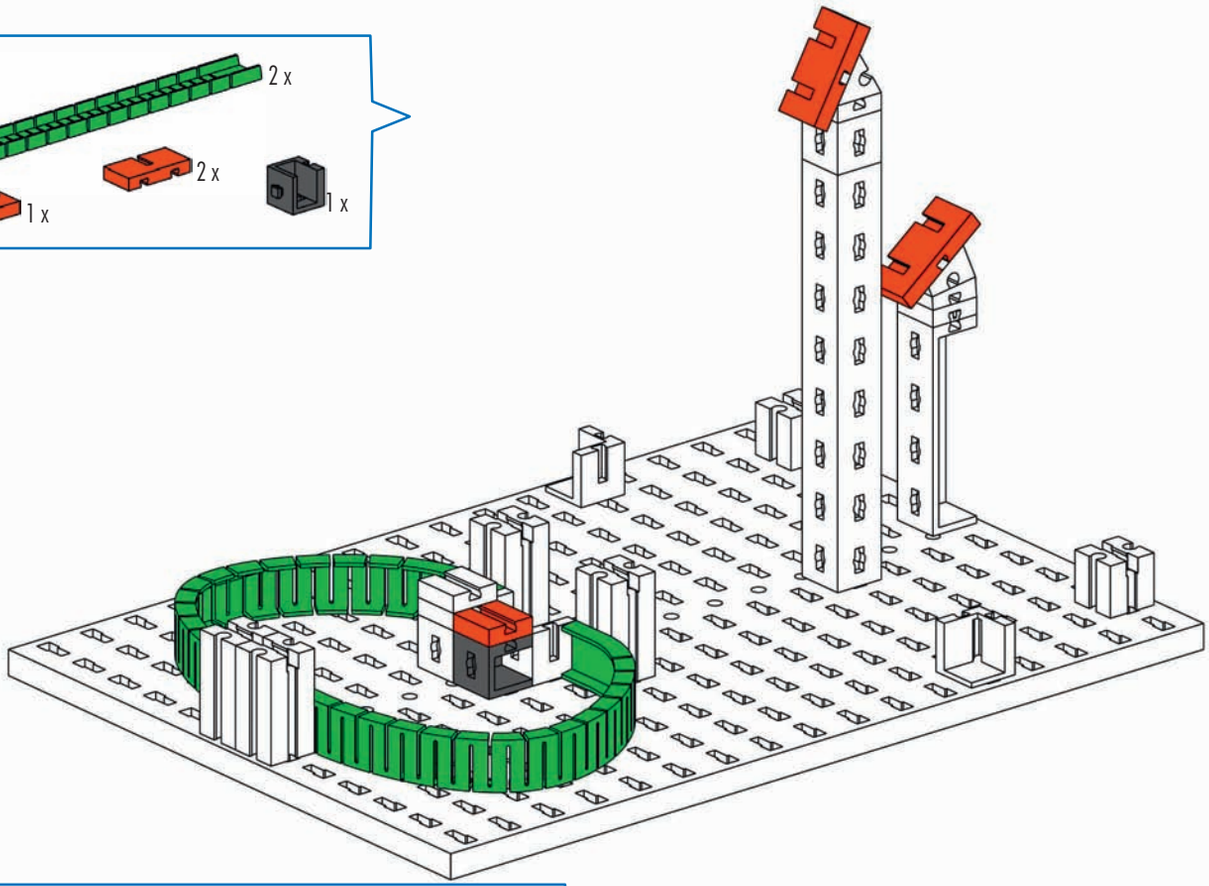

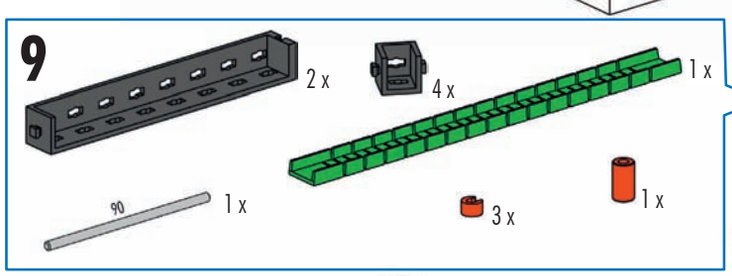

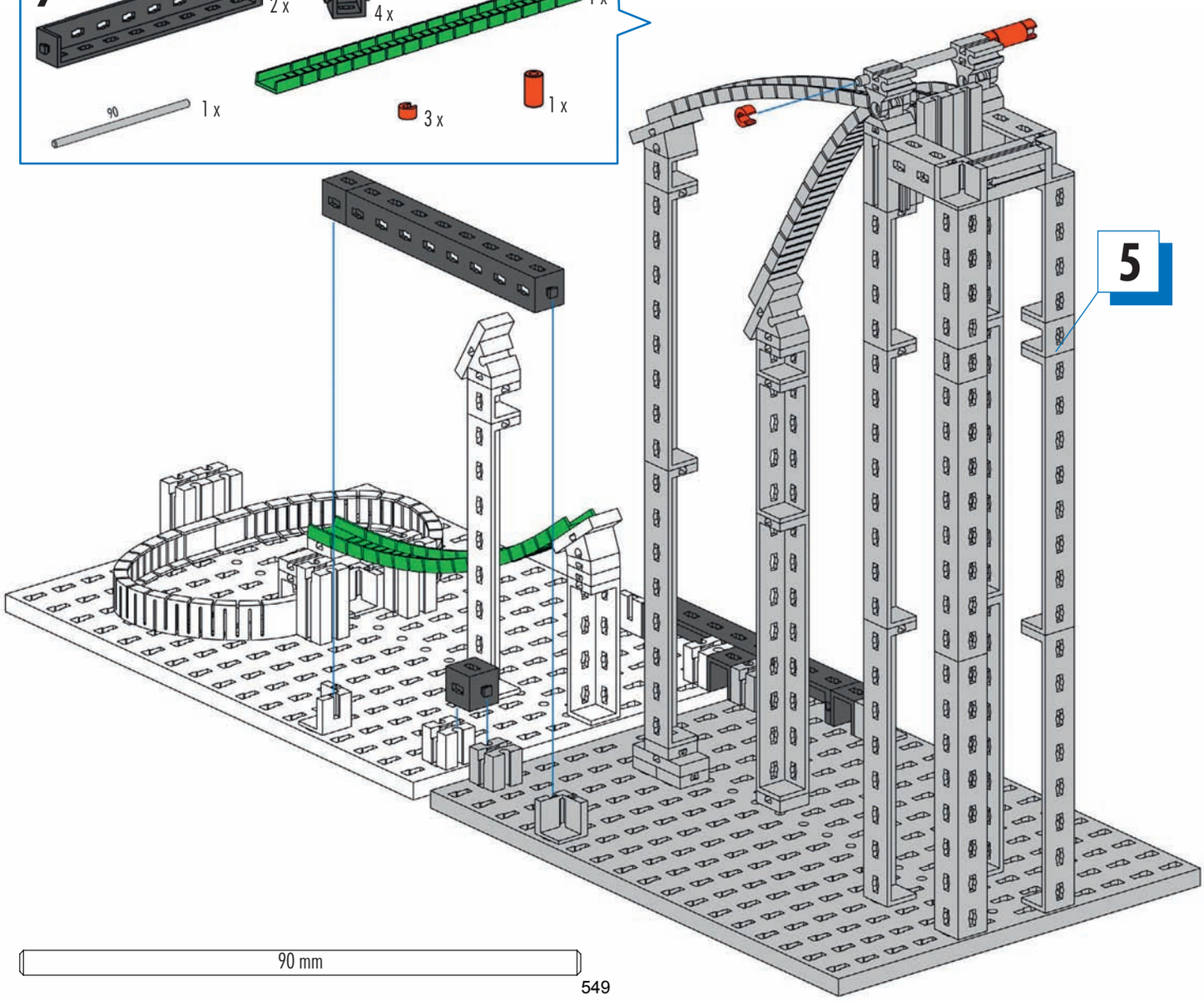

90 mm

549

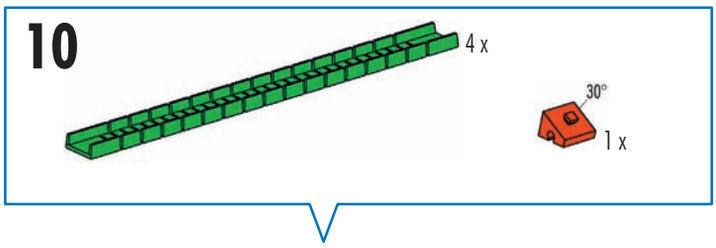
10
4 x
30°
1 x

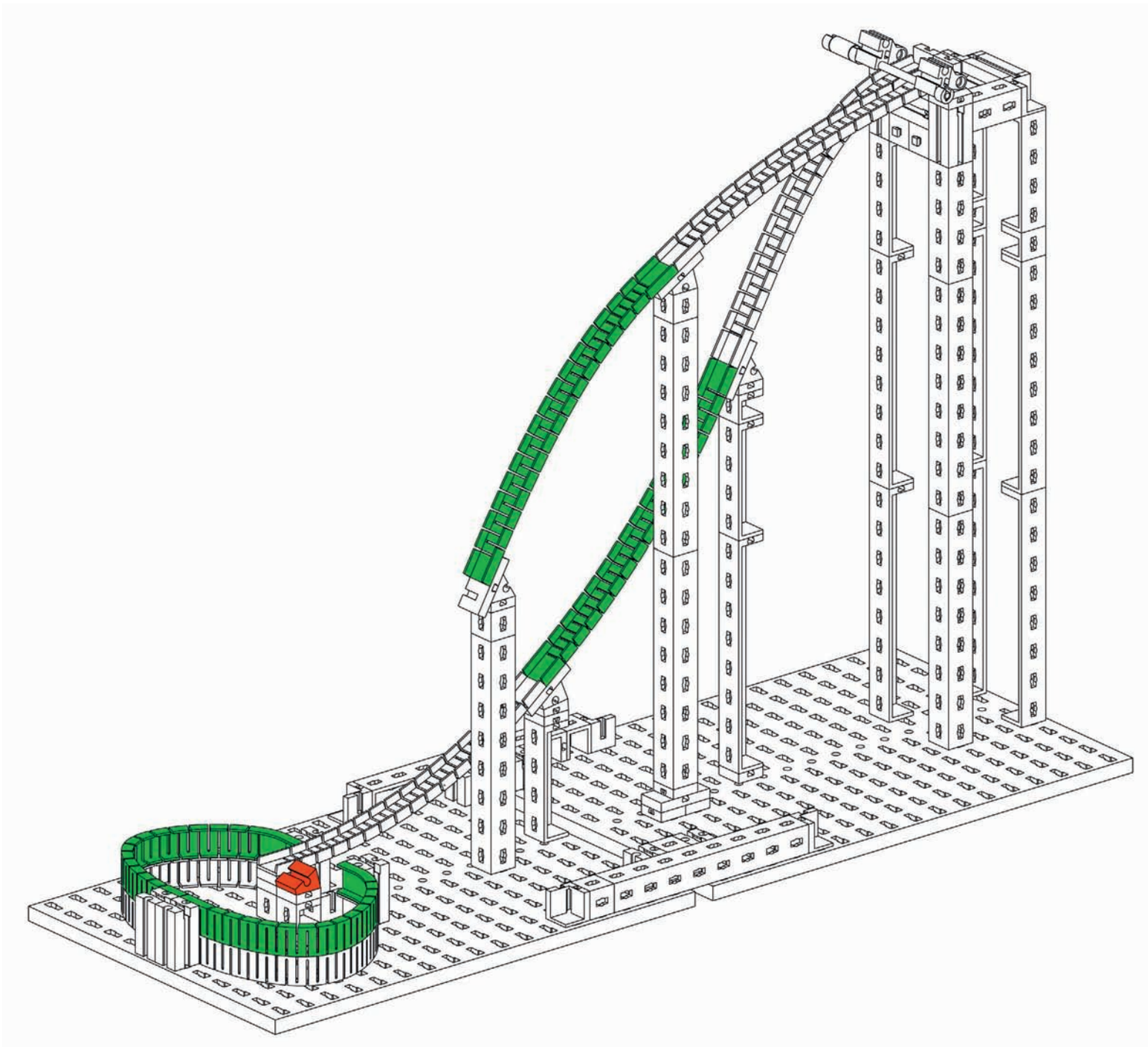

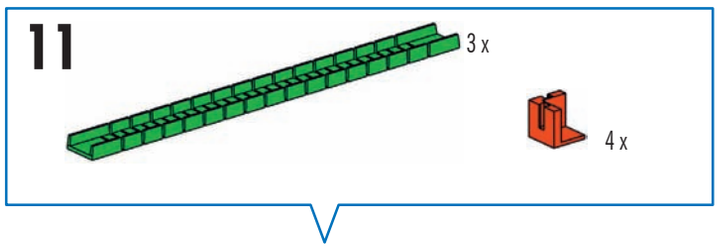
11
3 x
4 x

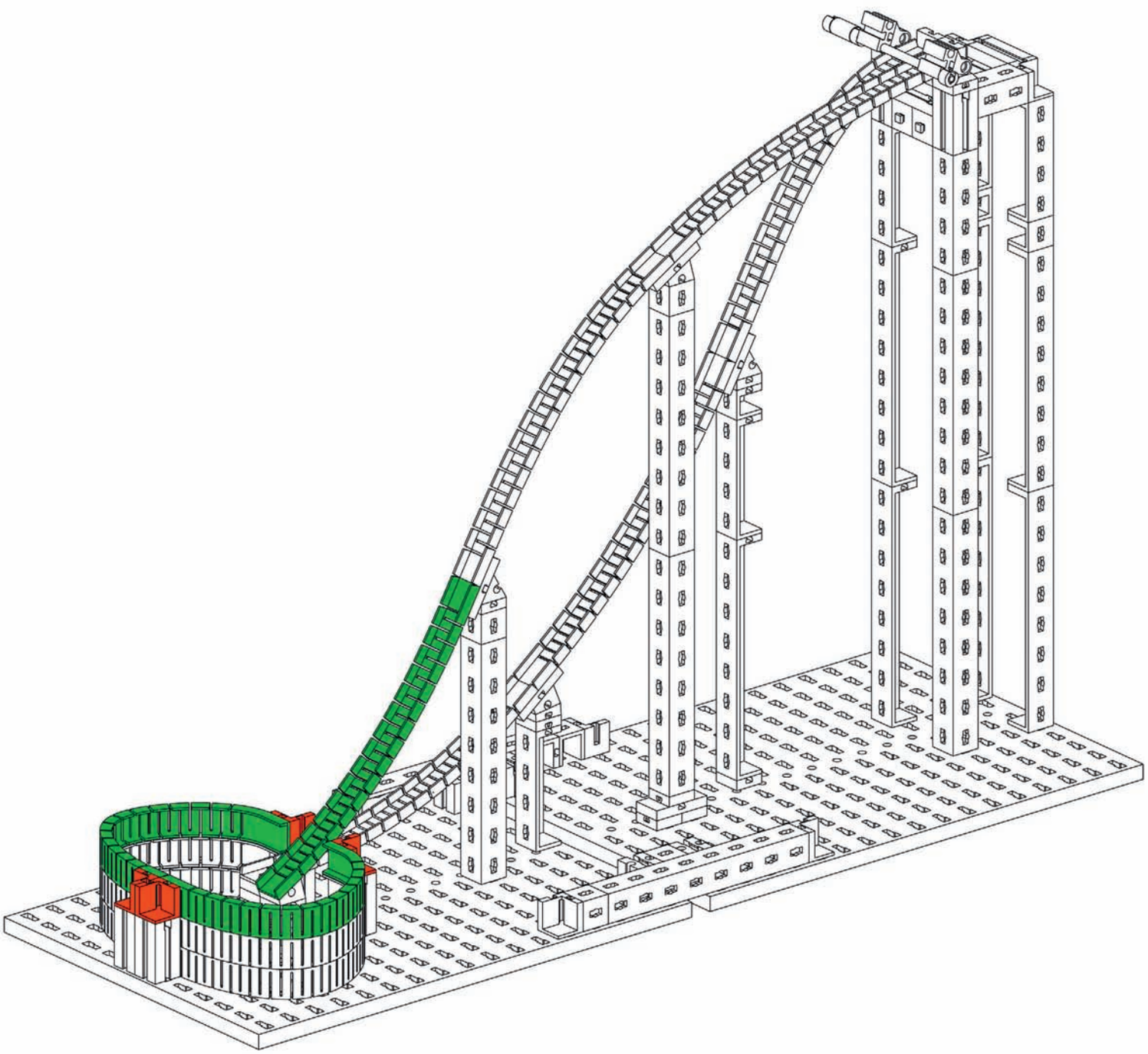

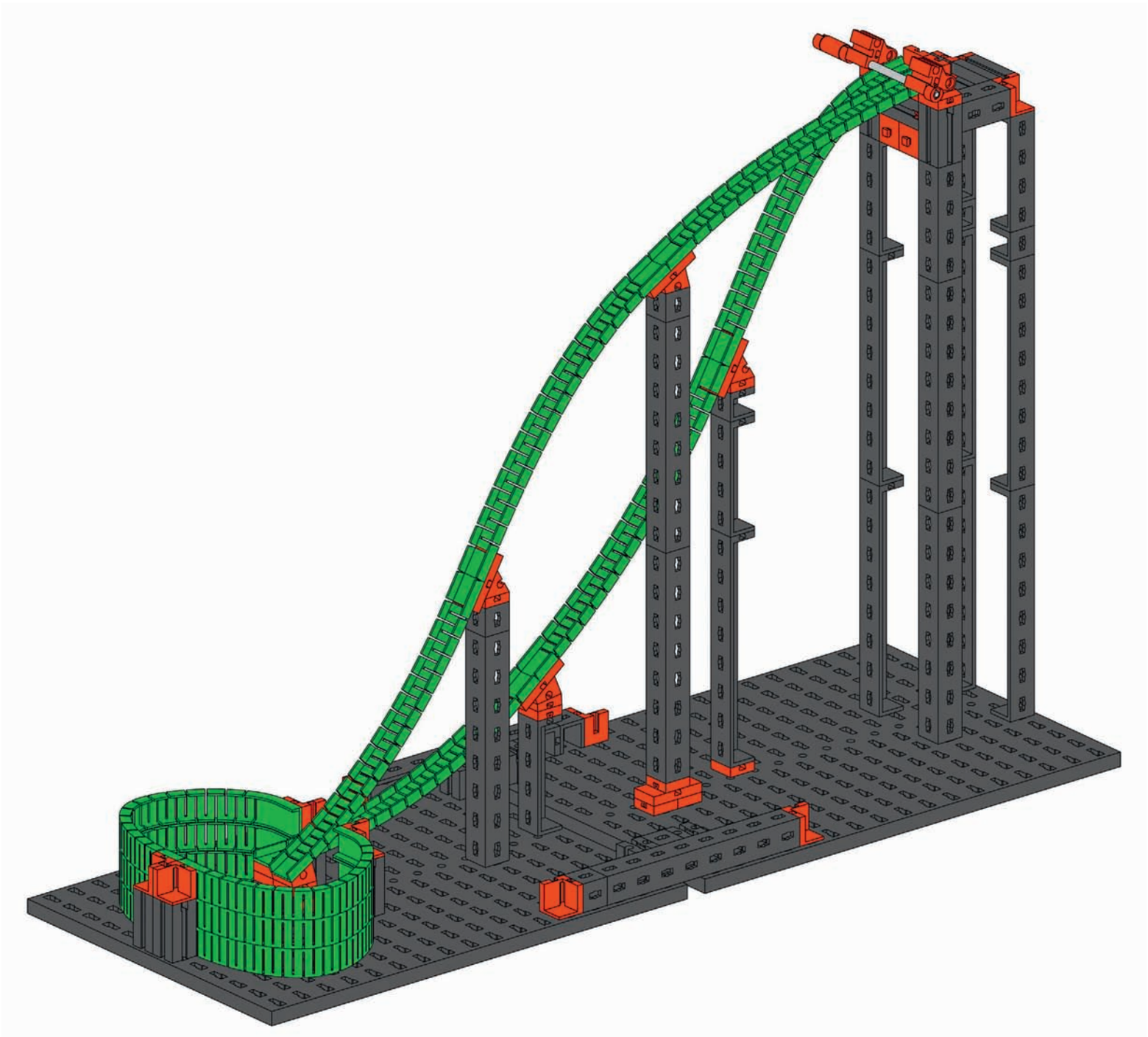

Versuchsmodell 3
Model for experiment 3
Maquette d'essai 3

Testmodel 3
Modelo de ensayo 3
Modelo experimental 3

Modello sperimentale 3
Модель для опыта 3
实验模型 3

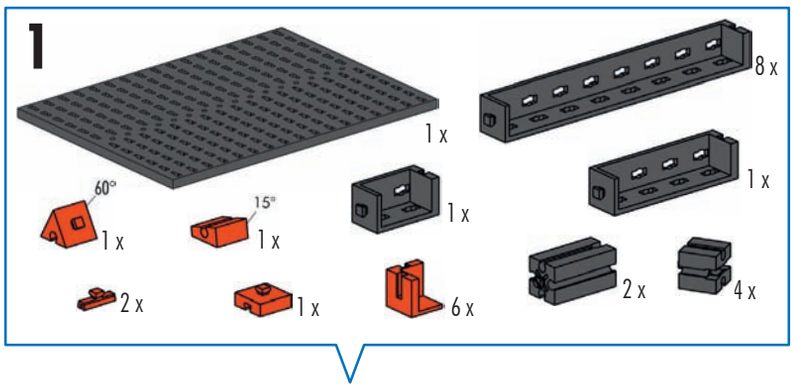

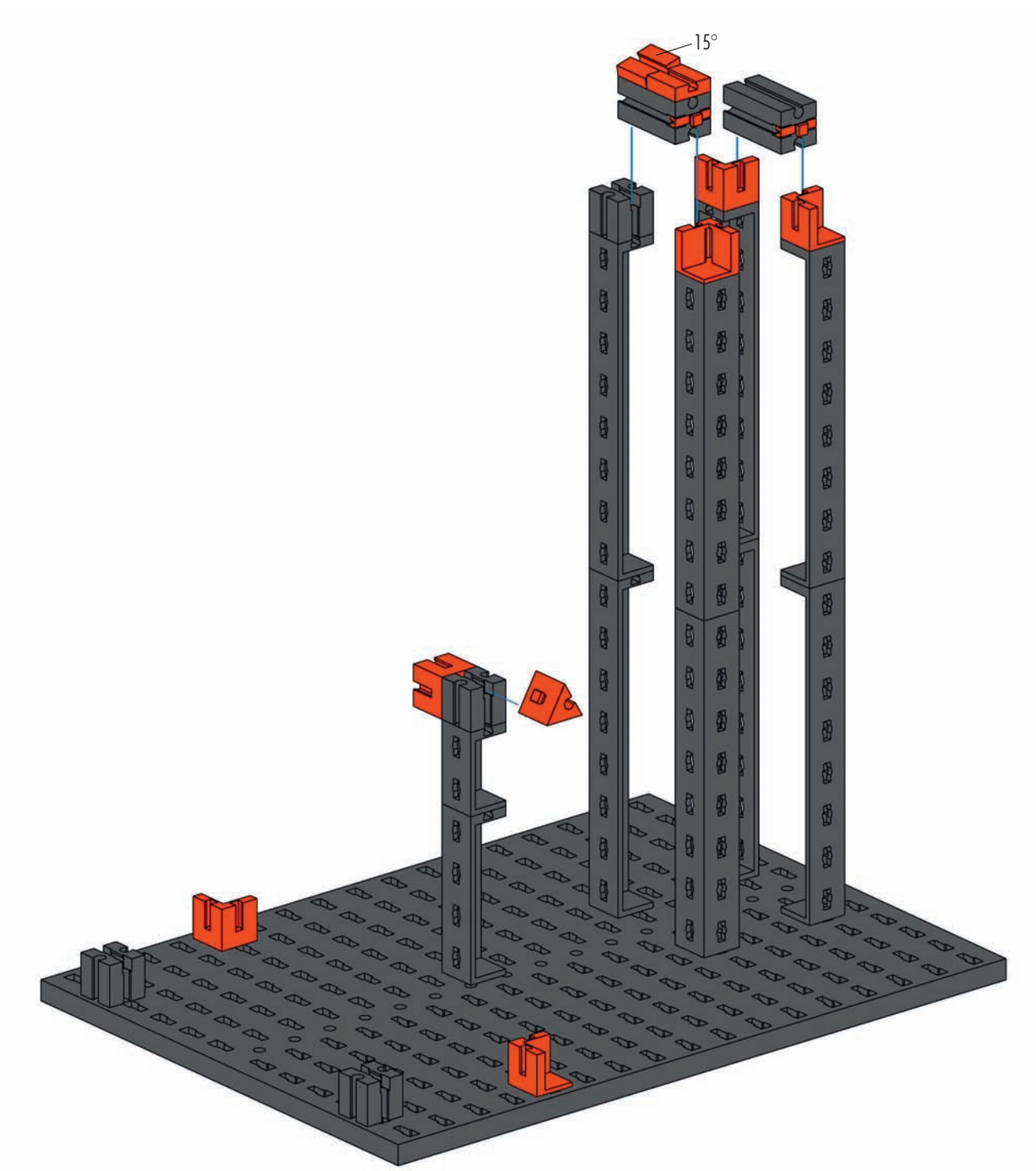

553

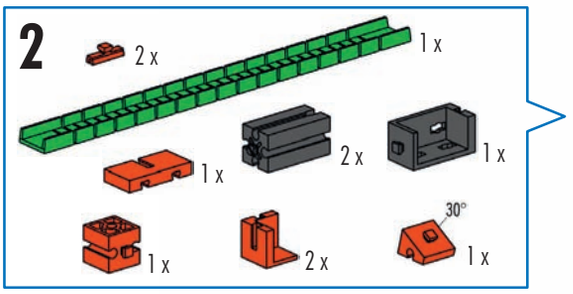
2
2 x
1 x
1 x
2 x
1 x
1 x
2 x
30°
1 x

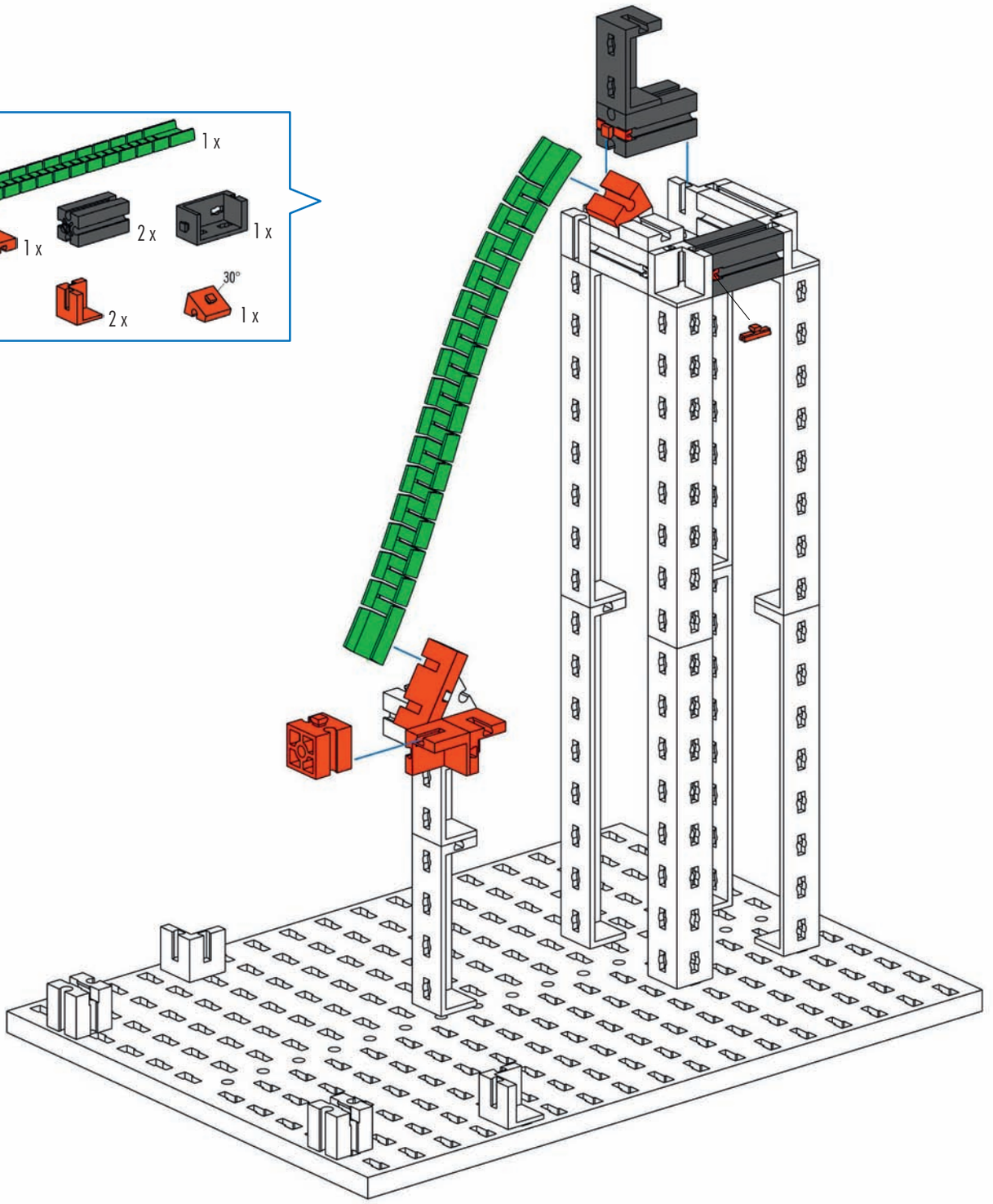

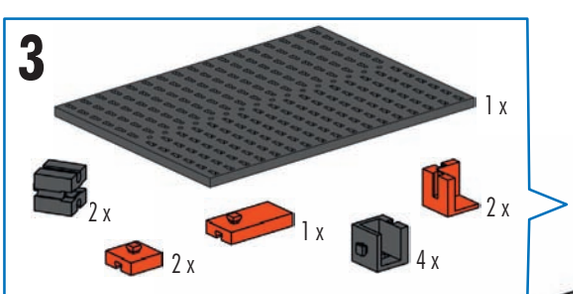
3
1 x
2 x
1 x
2 x
2 x
4 x

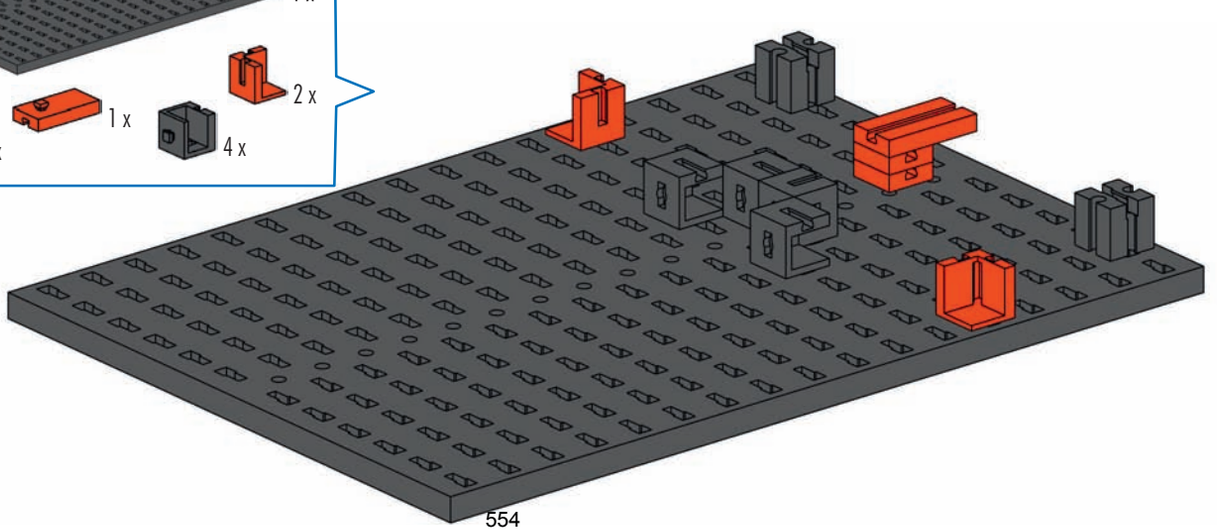

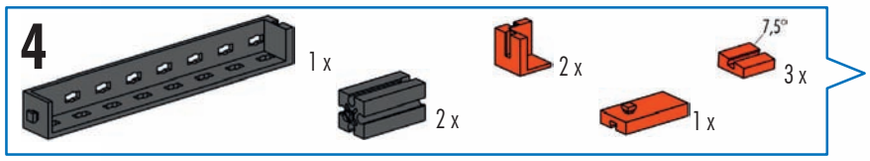

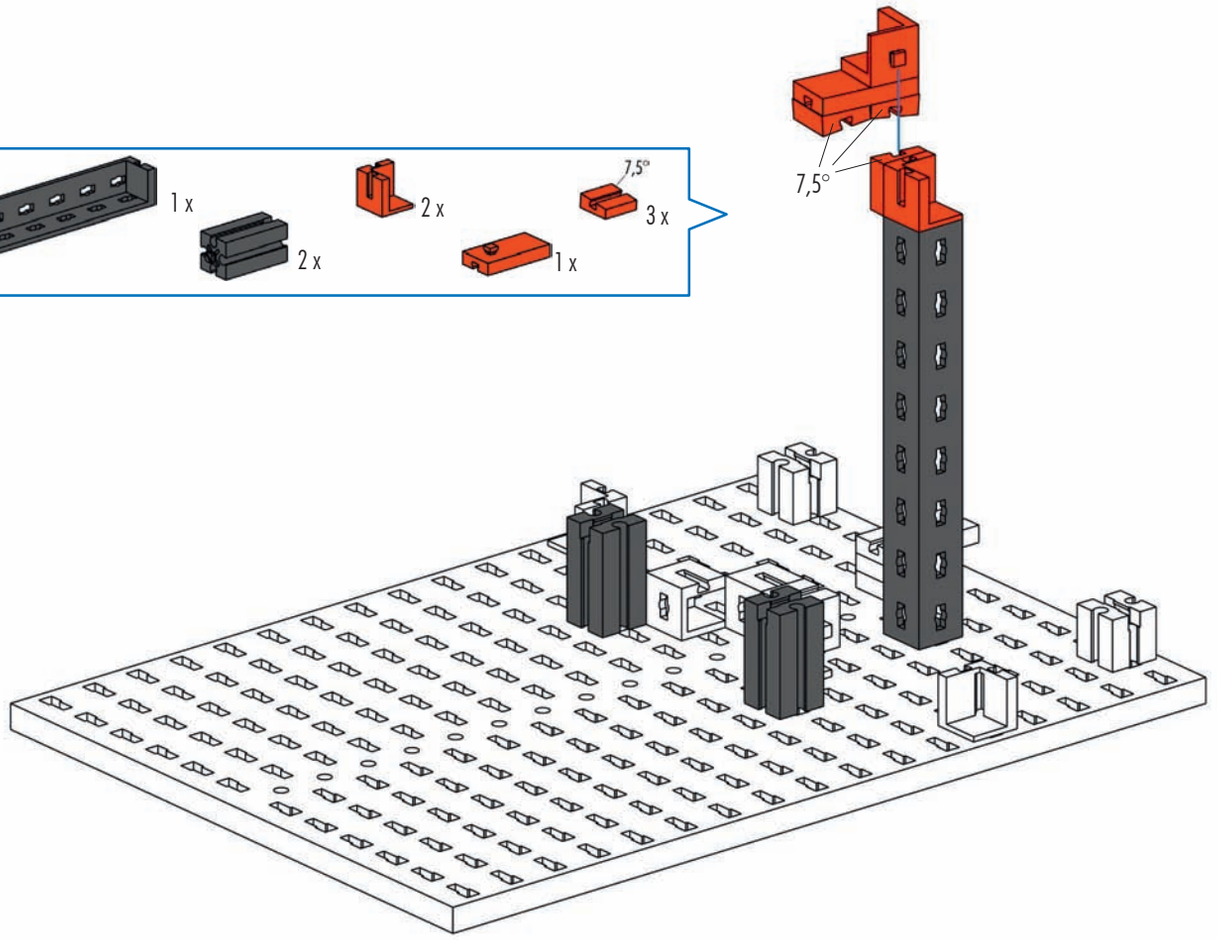

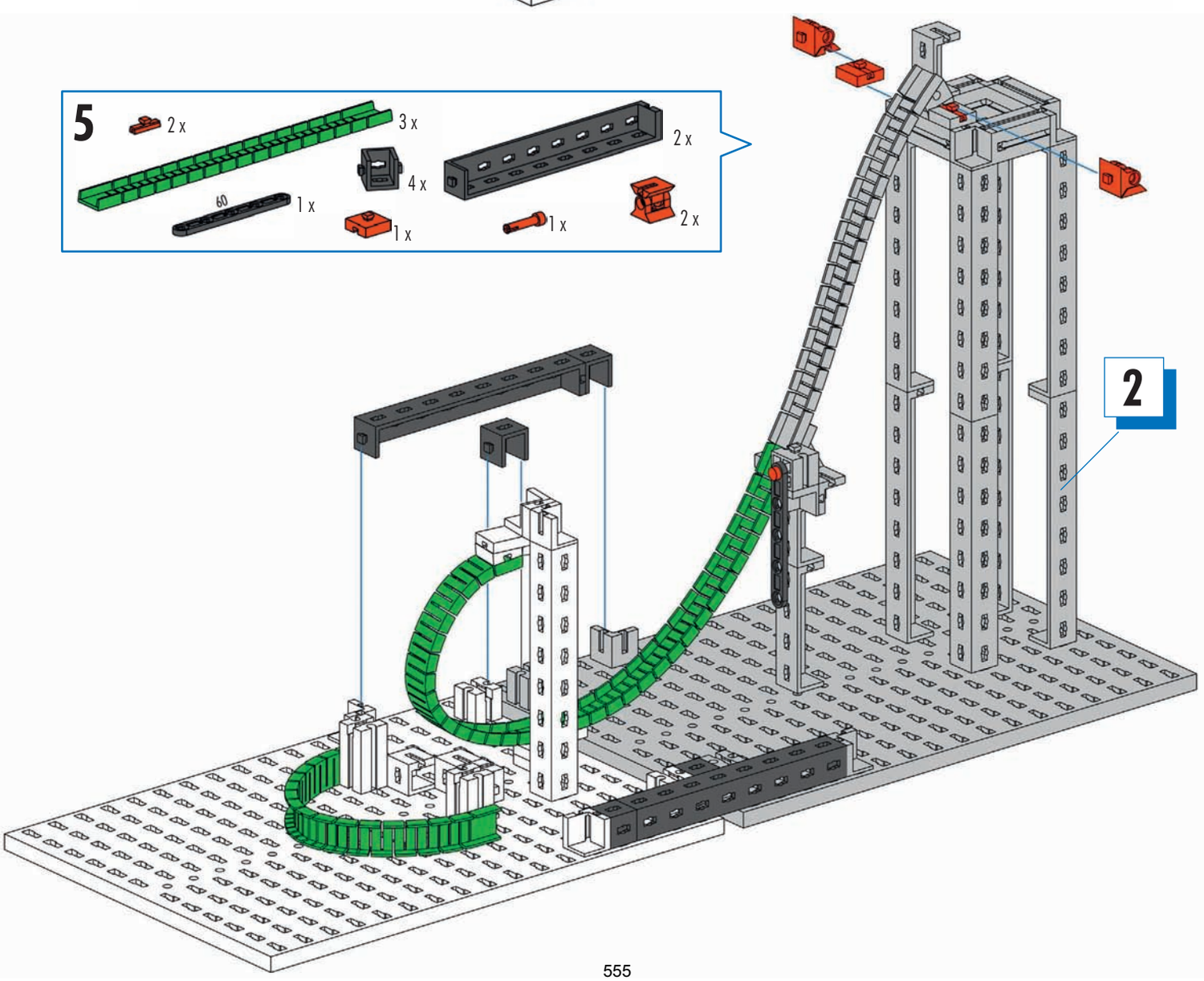

555

90 mm

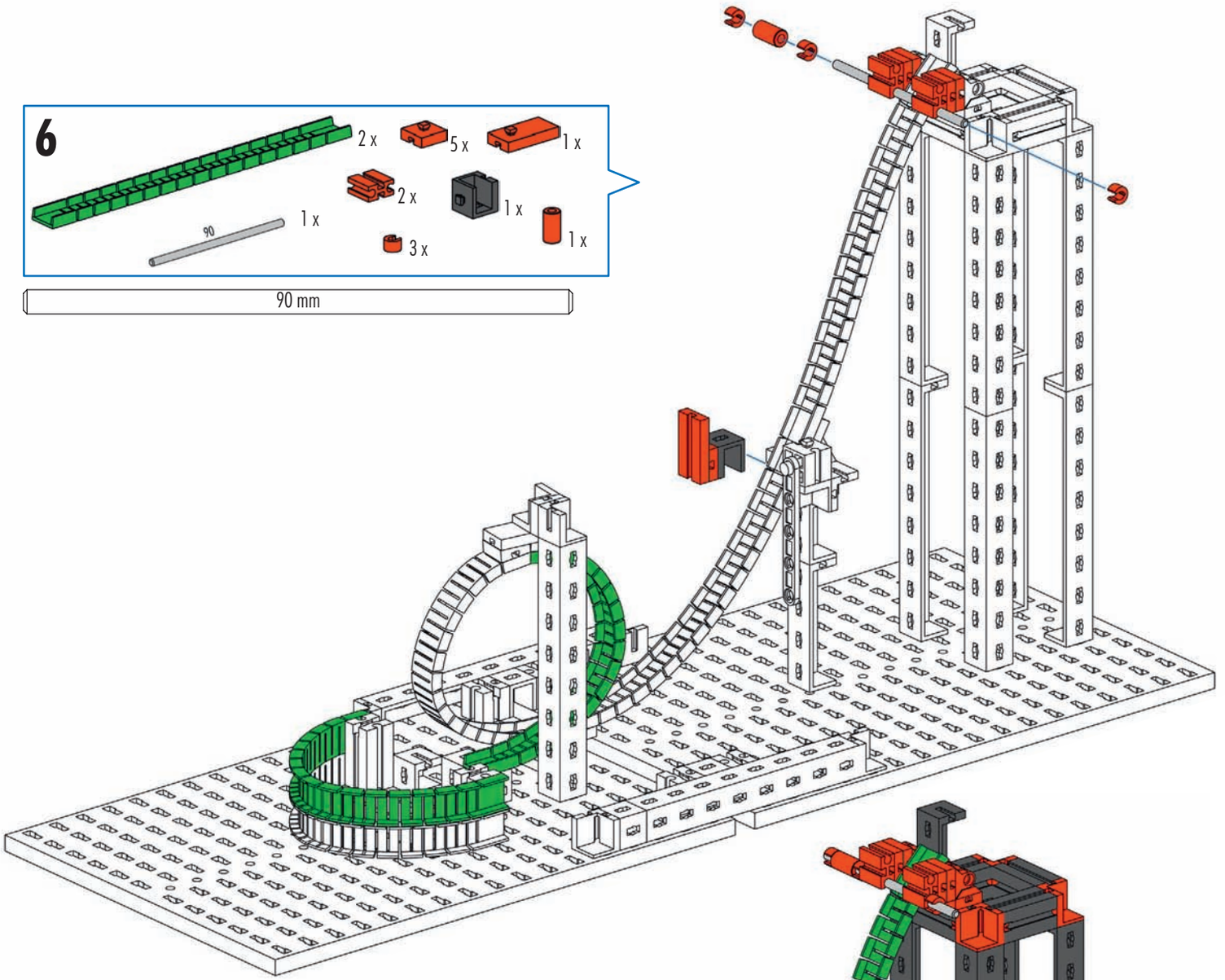

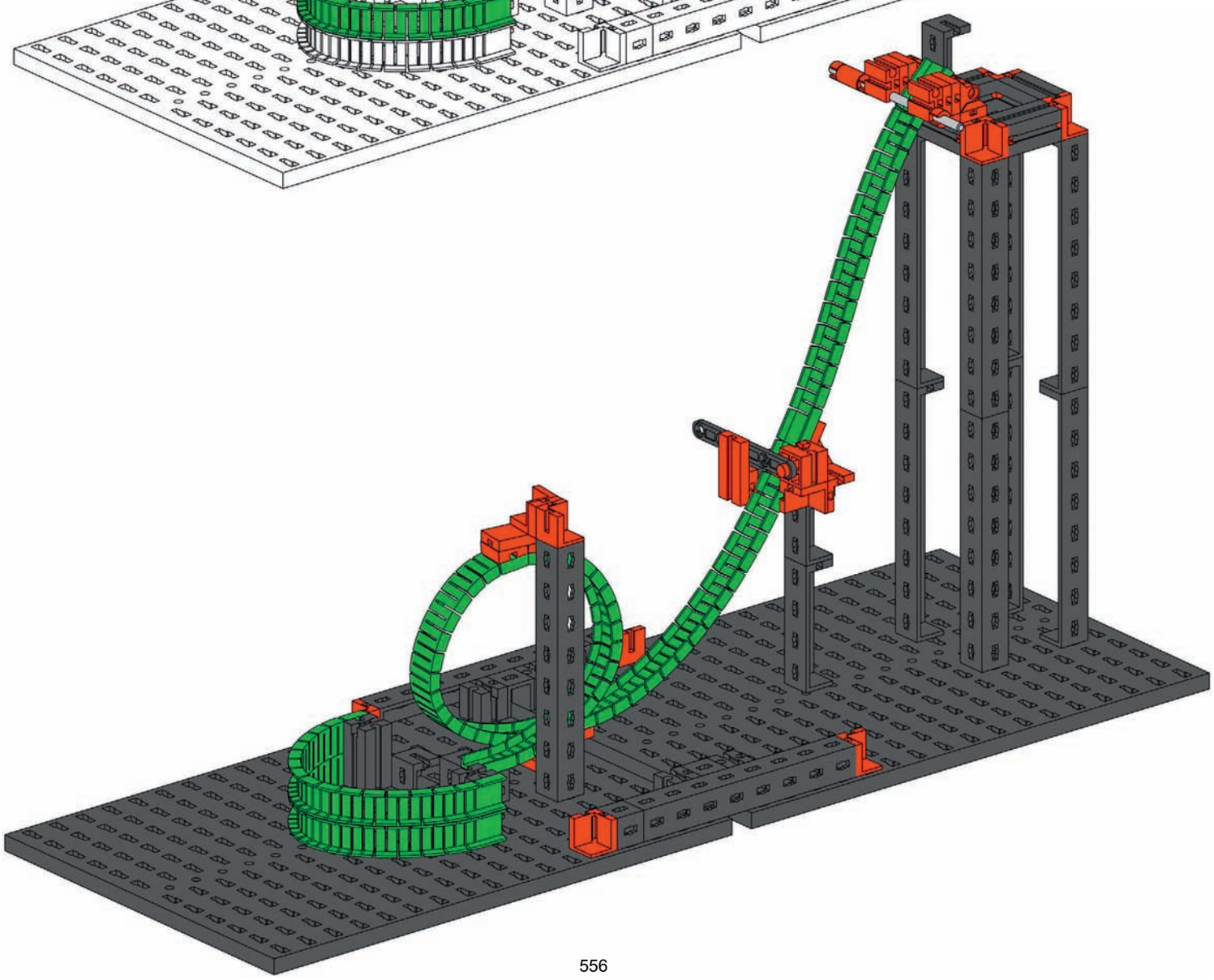

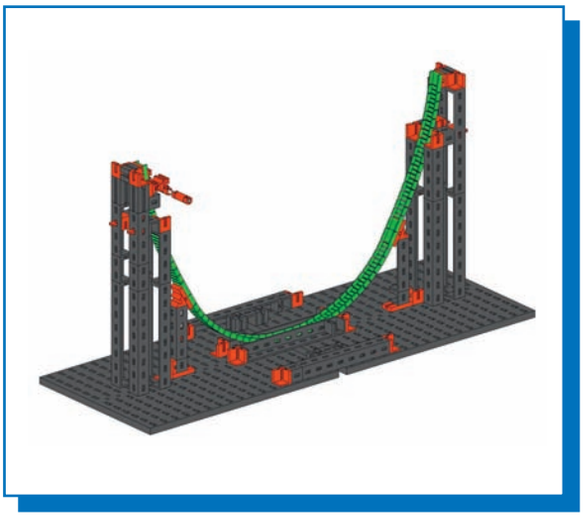

Versuchsmodell 4
Model for experiment 4
Maquette d'essai 4
Testmodel 4
Modelo de ensayo 4
Modelo experimental 4
Modello sperimentale 4
Модель для опыта 4
实验模型 4

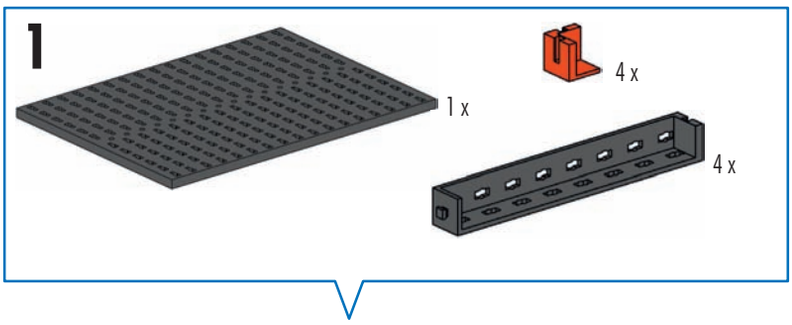

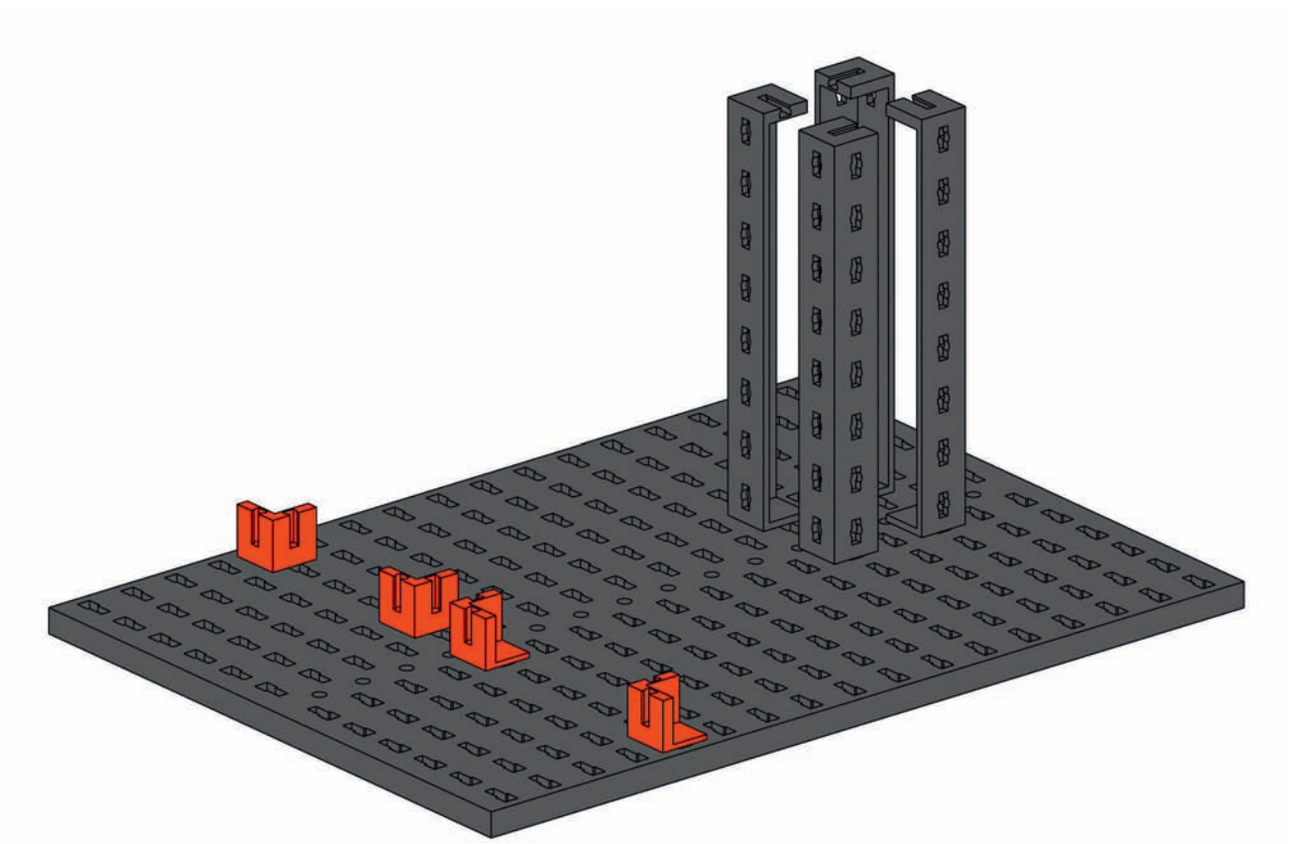

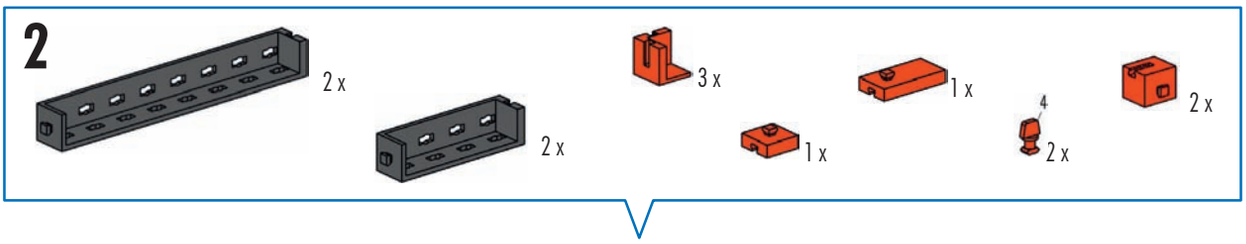
2
2 x
2 x
3 x
1 x
1 x
4
2 x
2 x

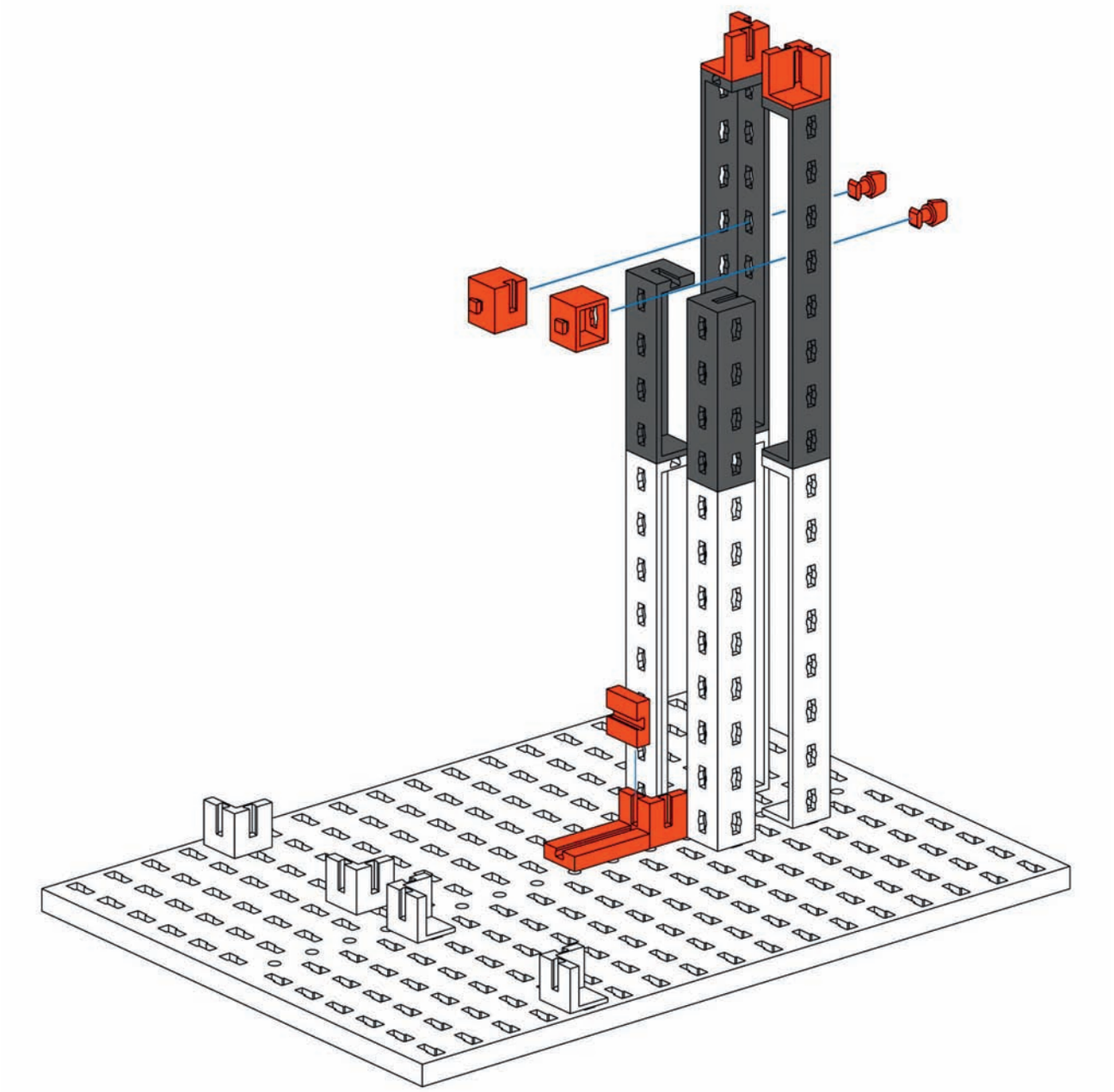

3

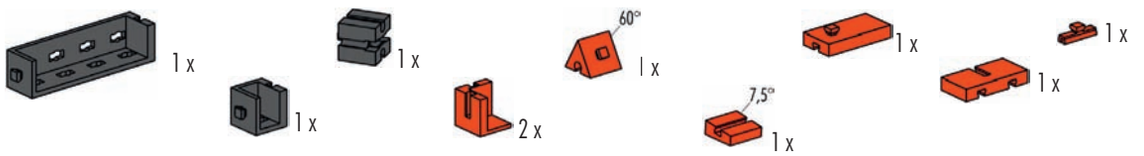

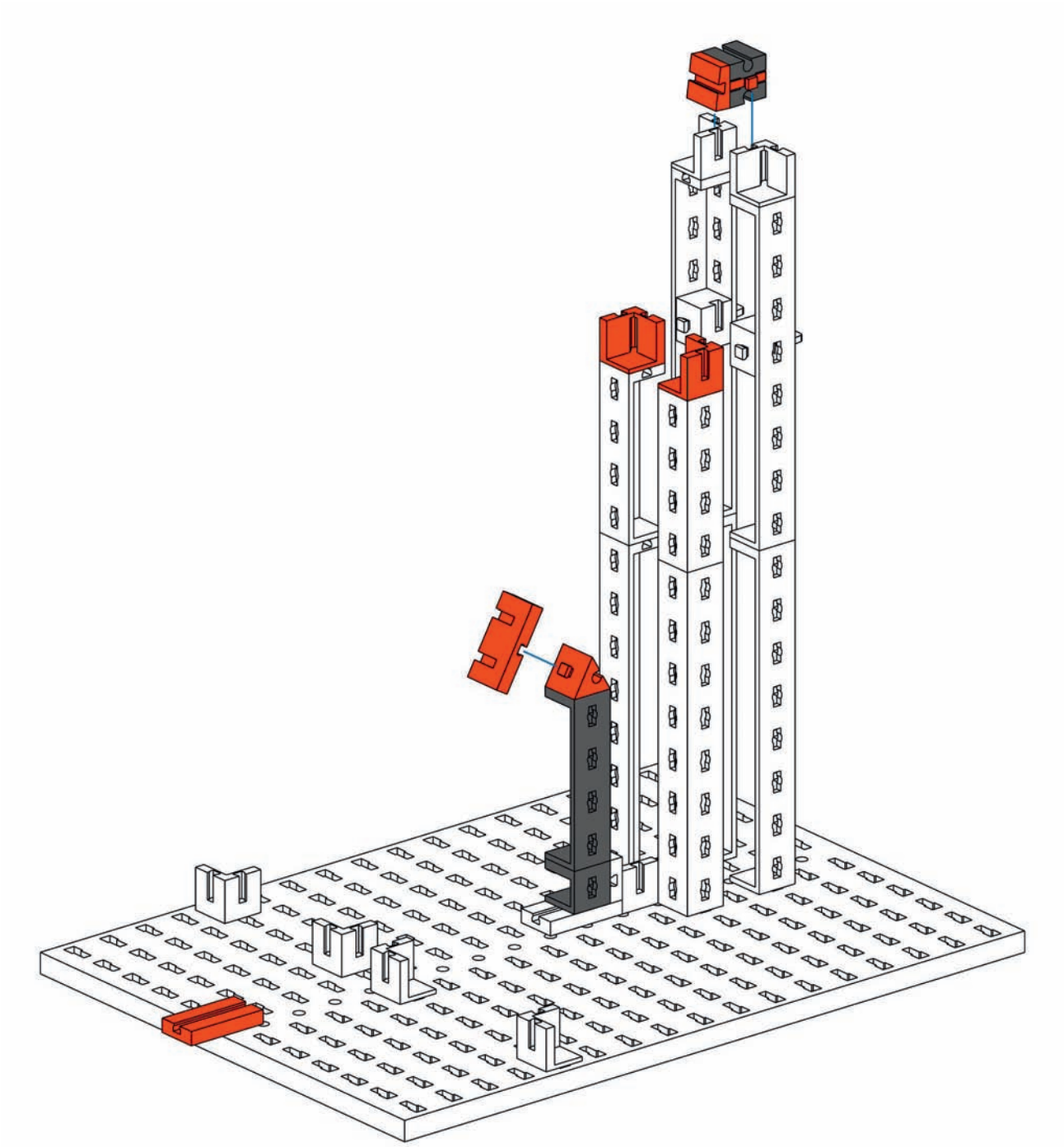

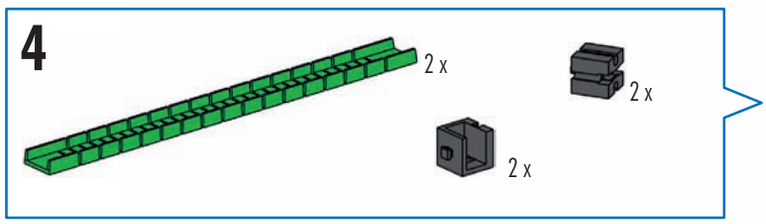
4
2 x
2 x
2 x

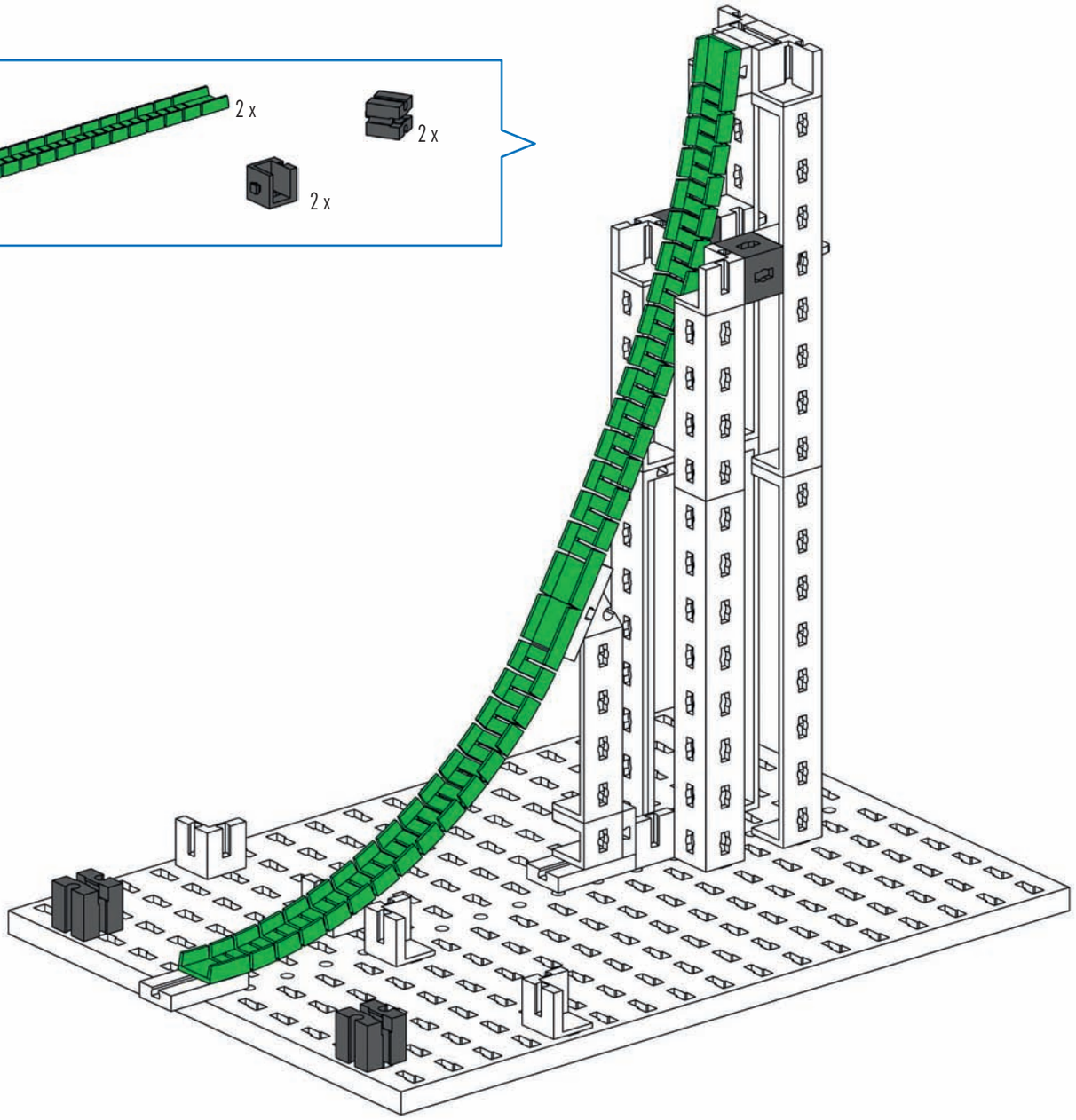

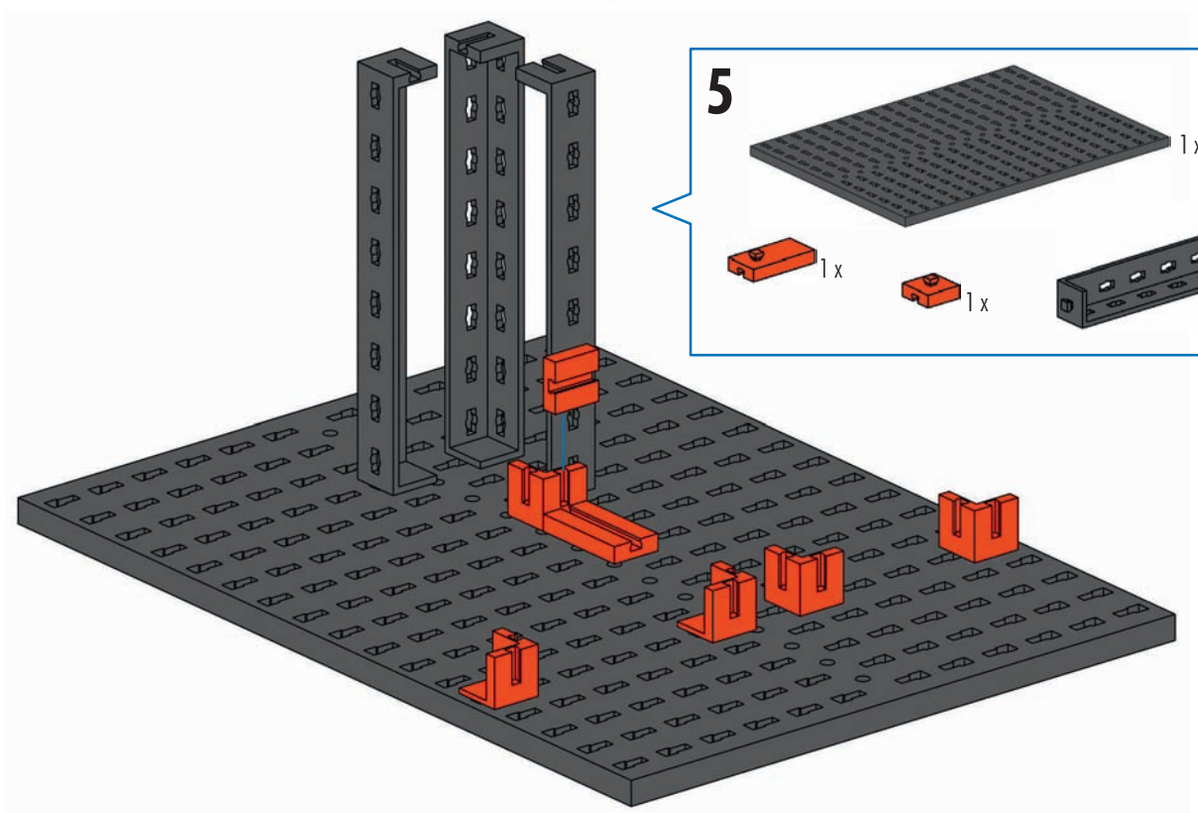

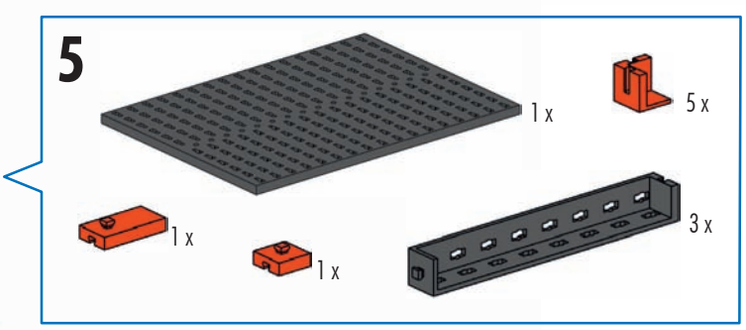
5
1 x
5 x
1 x
1 x
3 x

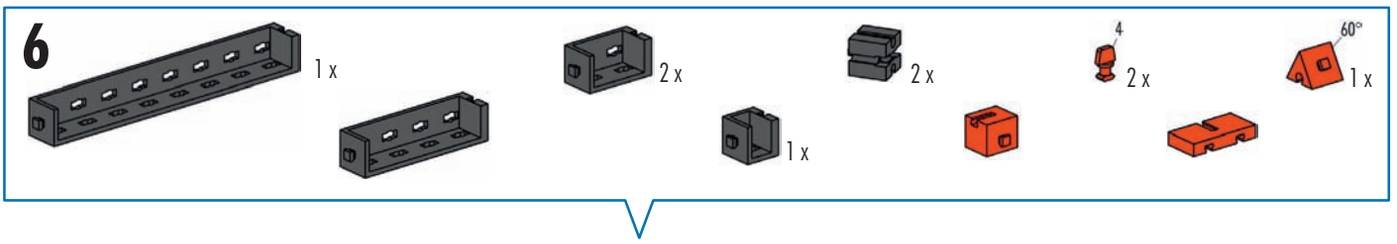

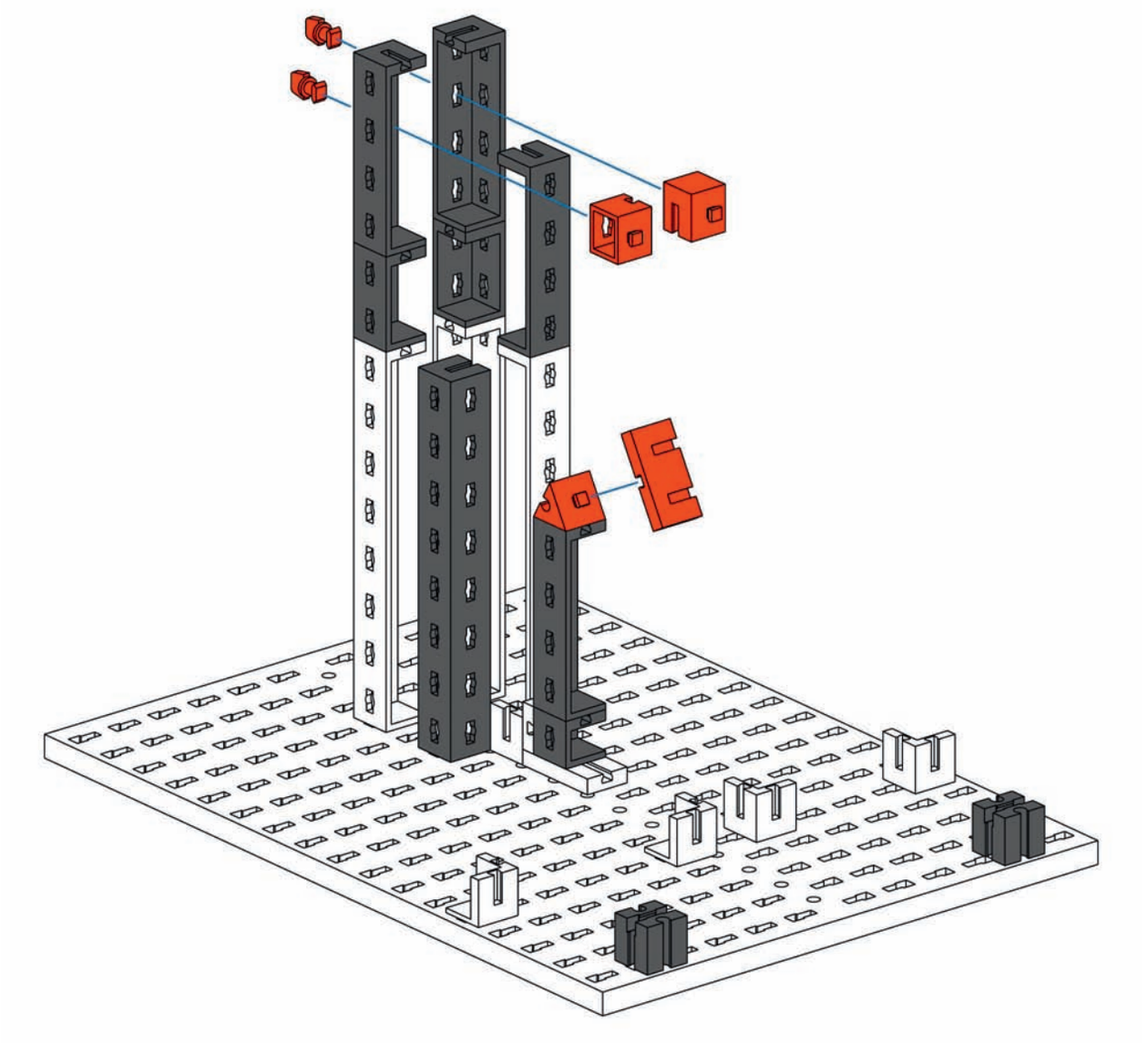

561

7

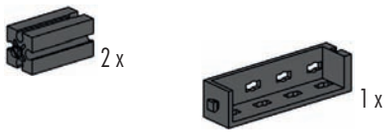

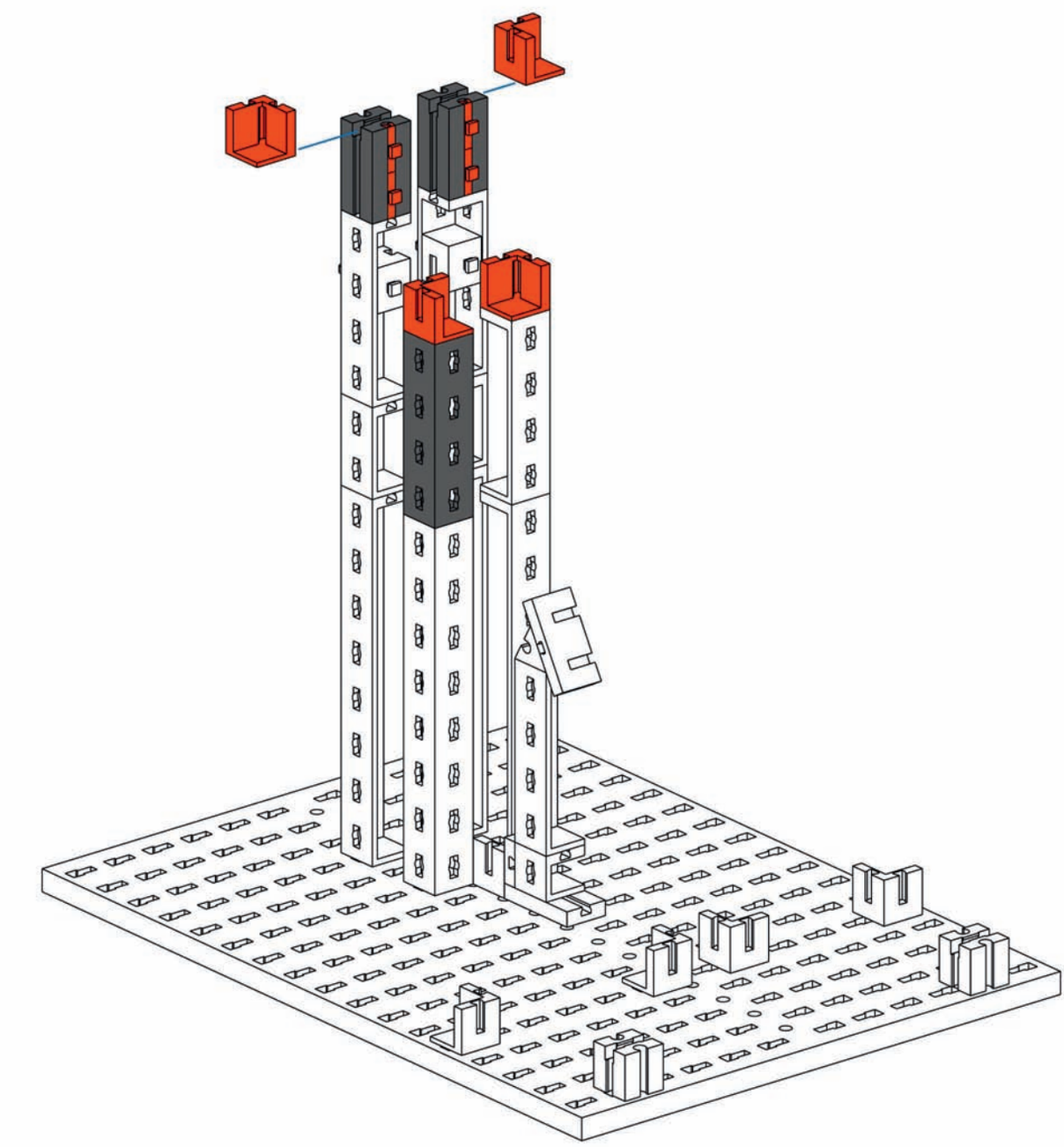

8

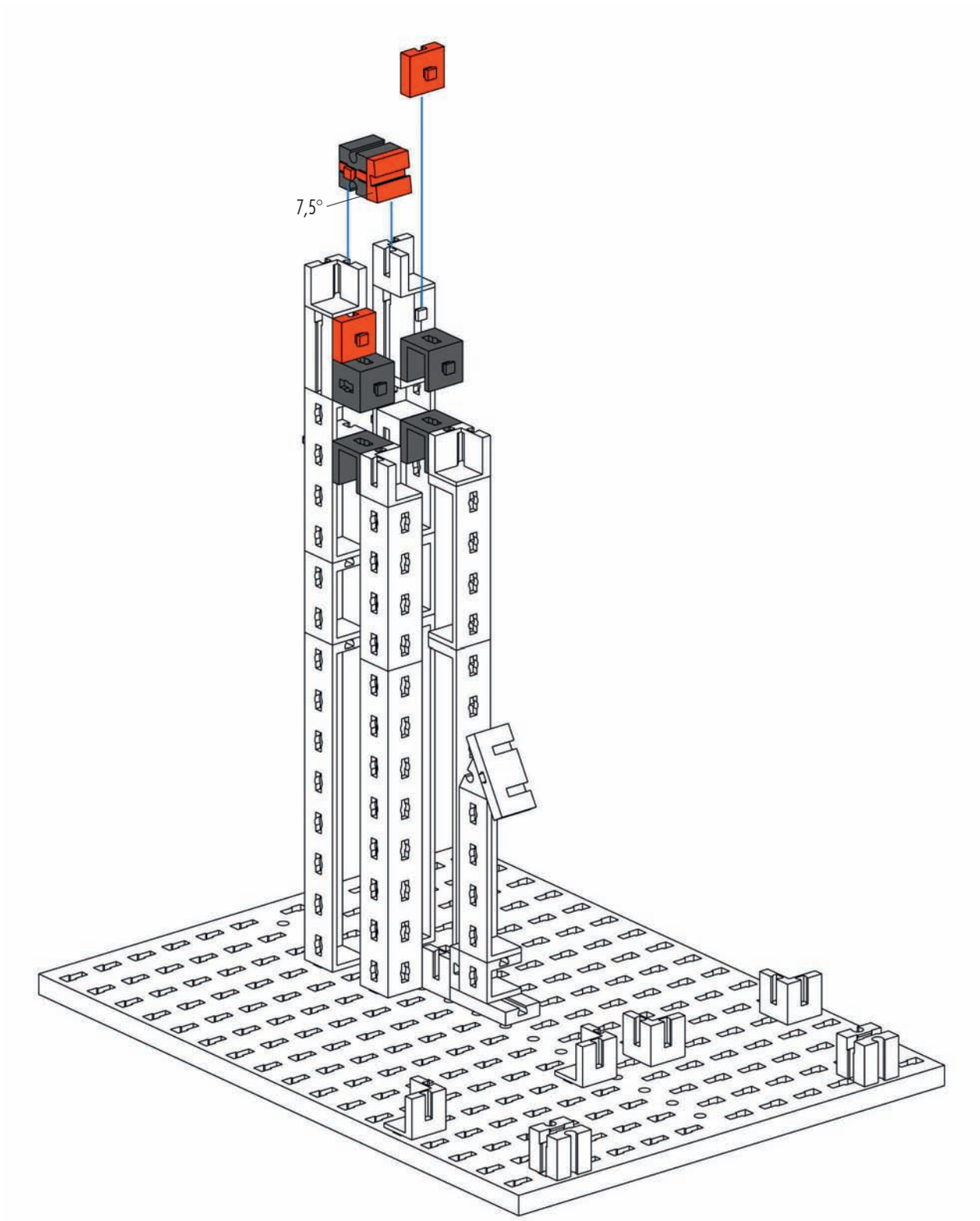

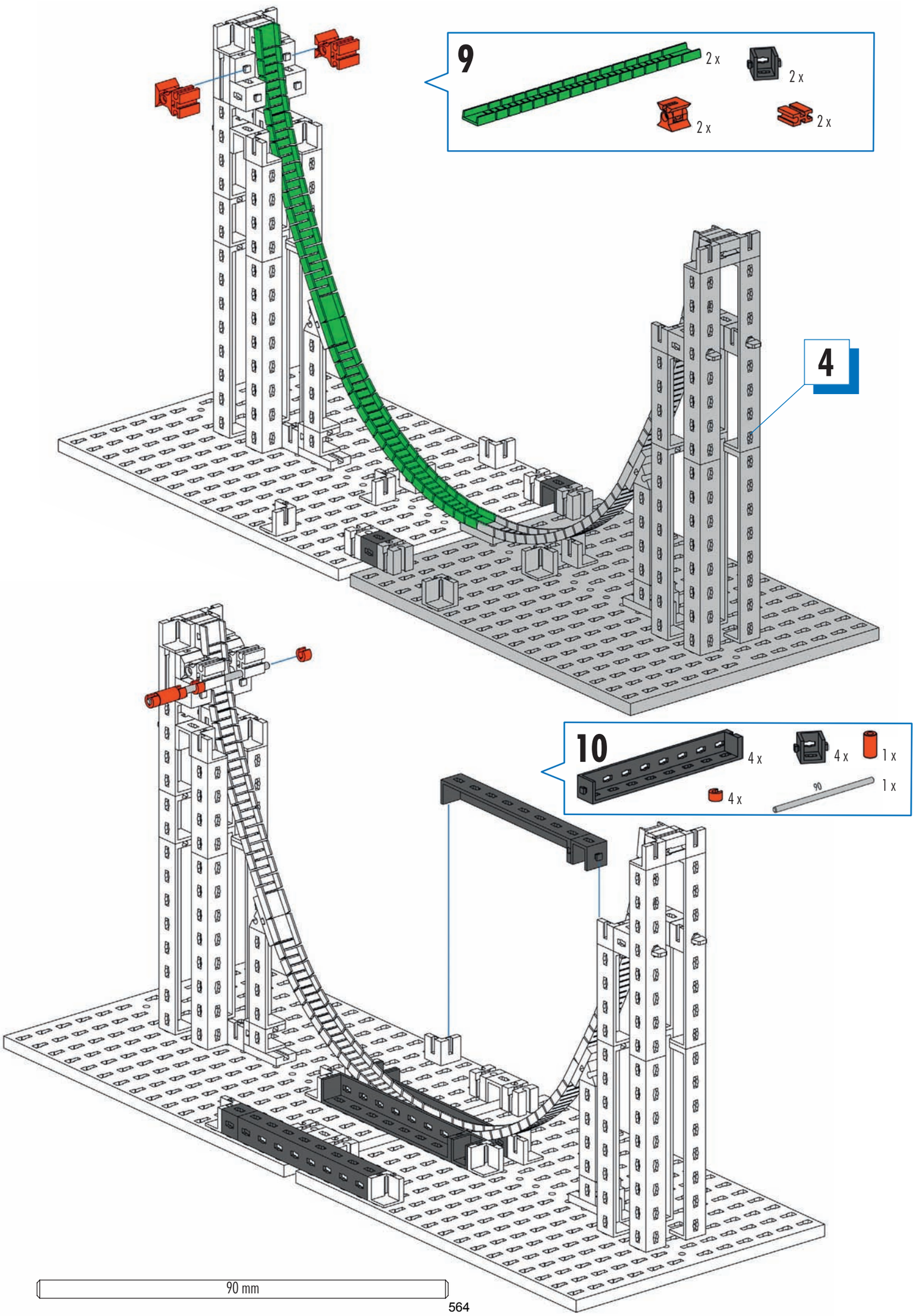
9
2 x
2 x
2 x
2 x
4
10
4 x
4 x
1 x
4 x
90
1 x
90 mm
564

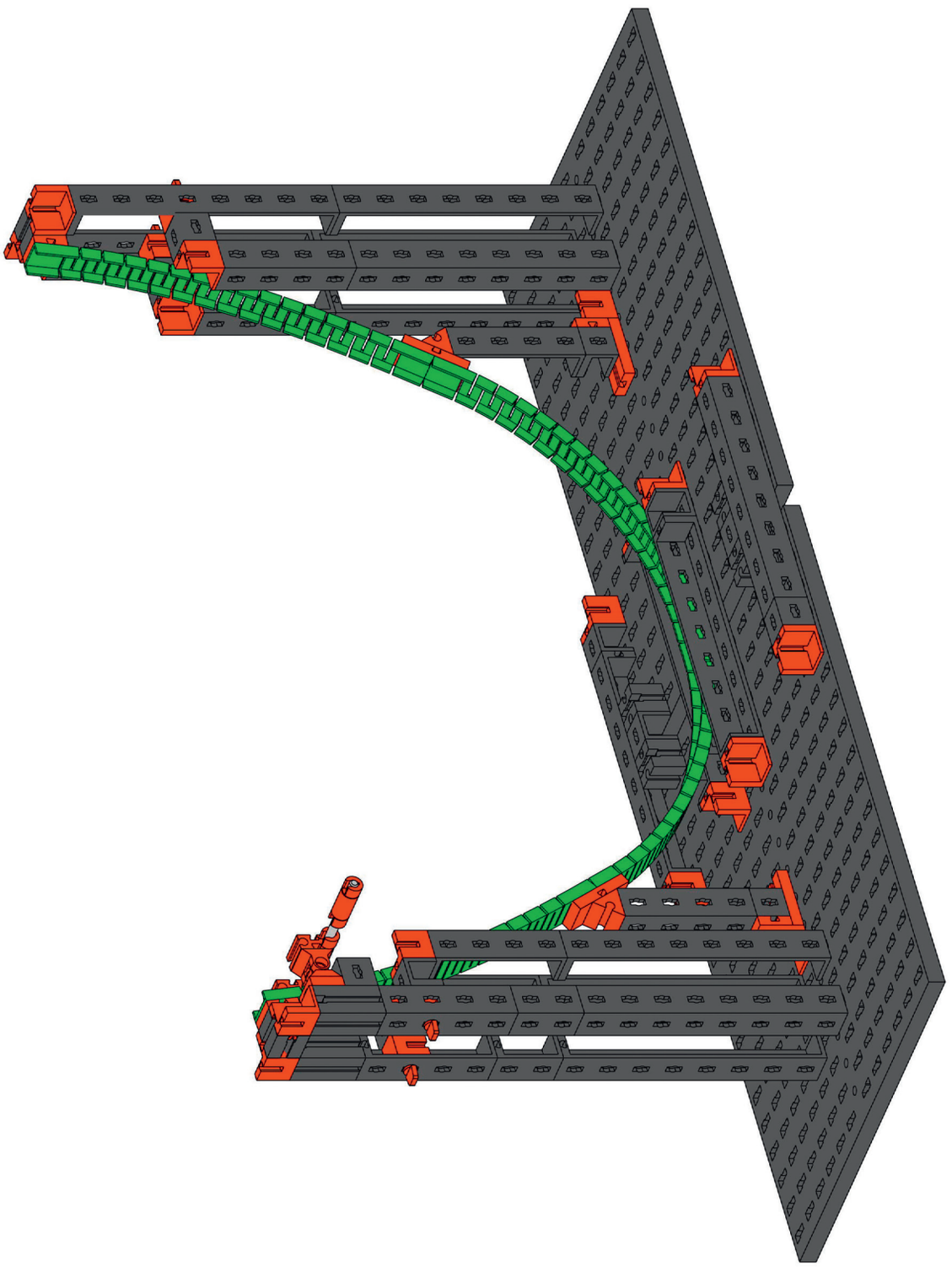

565

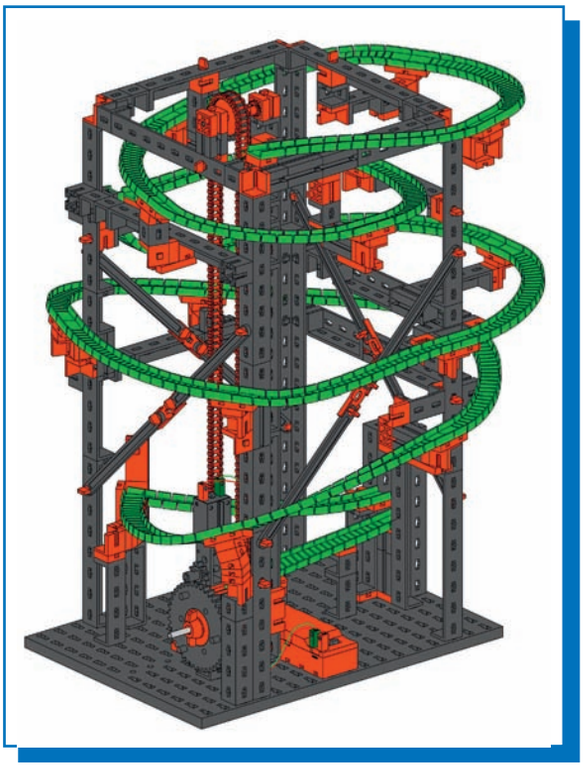

Parcours 1
Obstacle course 1
Parcours 1

Parcours 1
Pista de recorrido 1
Circuito 1

Circuito 1
Маршрут 1
滚珠弯道 1

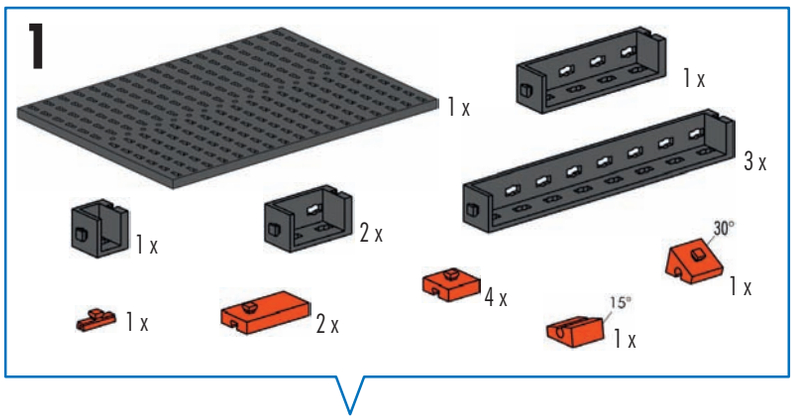

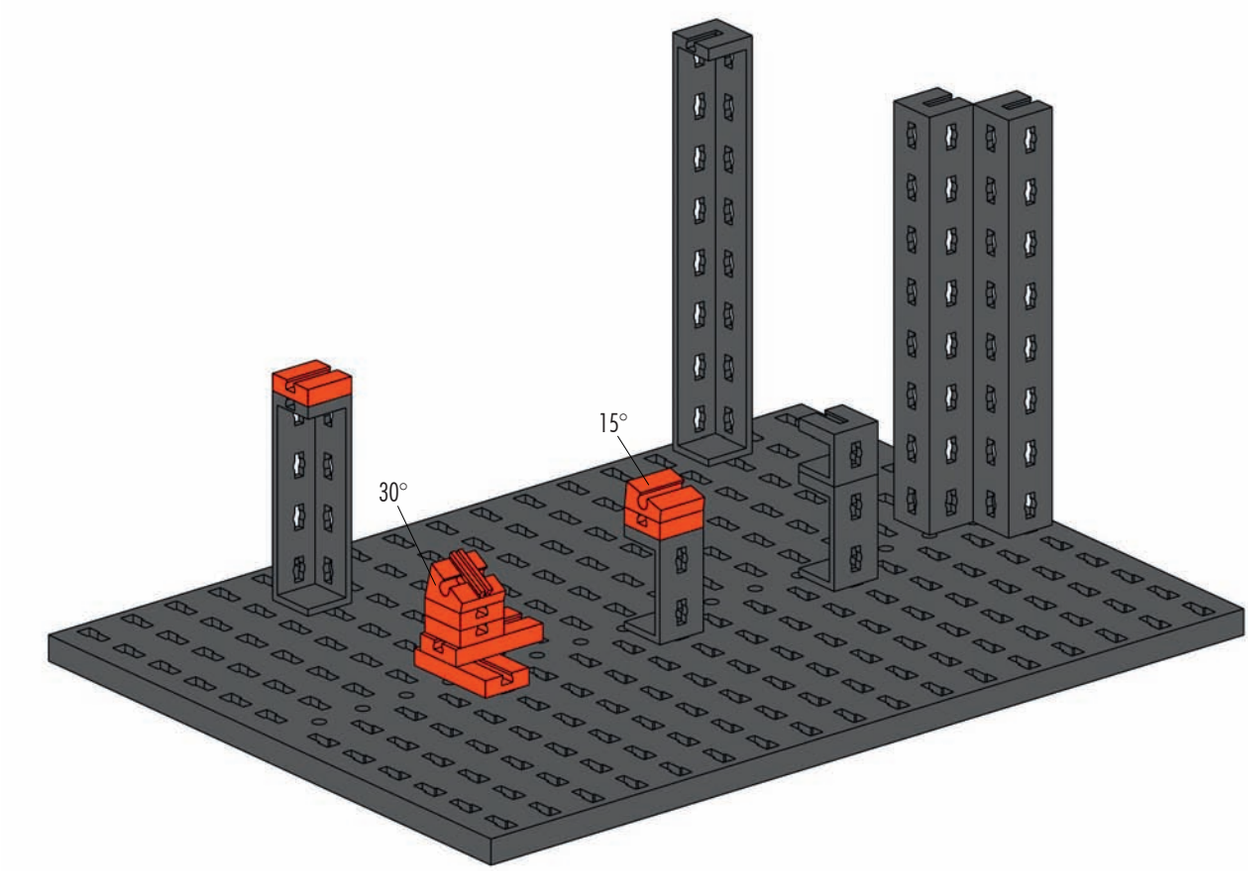

2

2 x

2 x

1 x

1 x

1 x

7,5°
5 x

30°
1 x

4 x

1 x

1 x

1 x

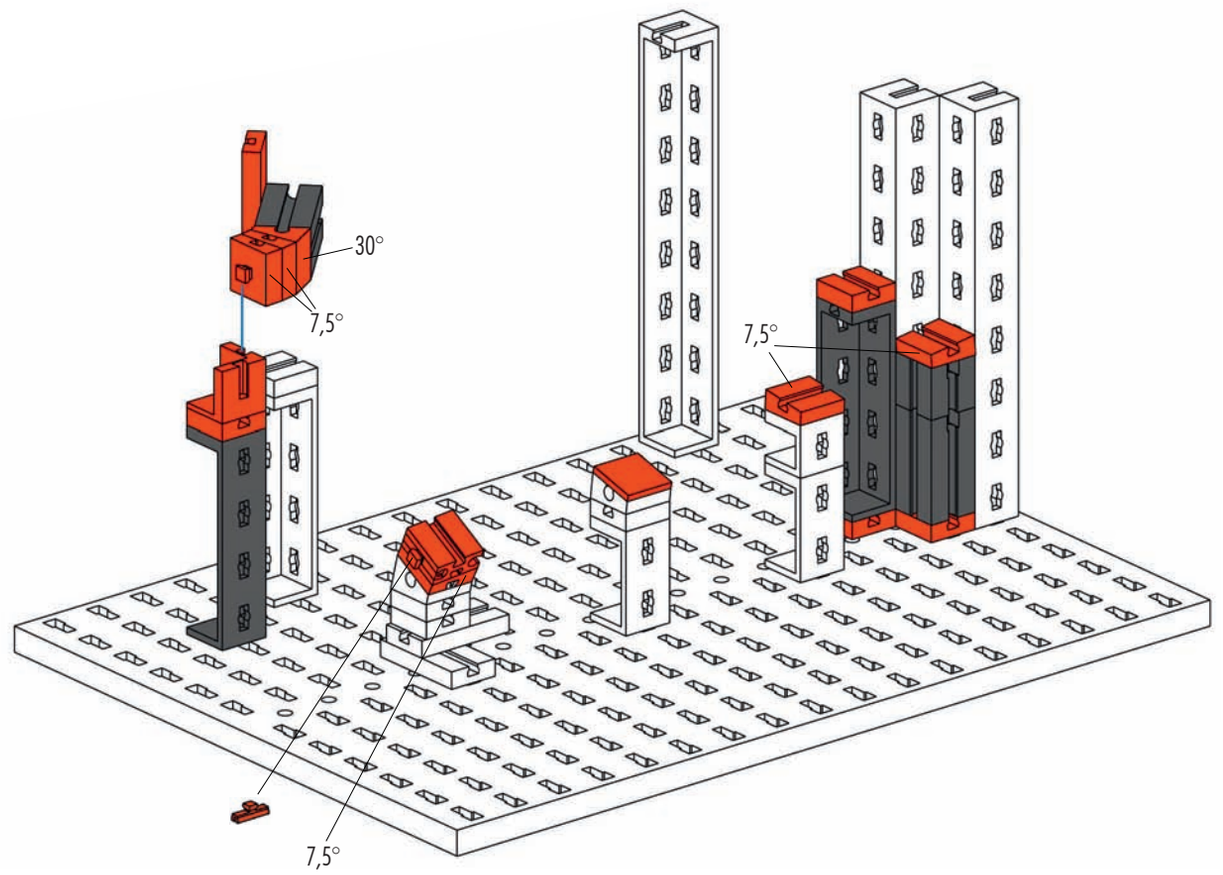

3

2 x

2 x

2 x

1 x

90
1 x

1 x

1 x

1 x

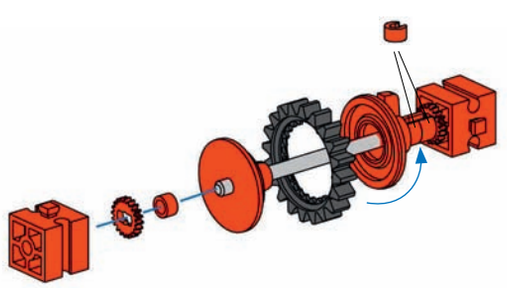

90 mm

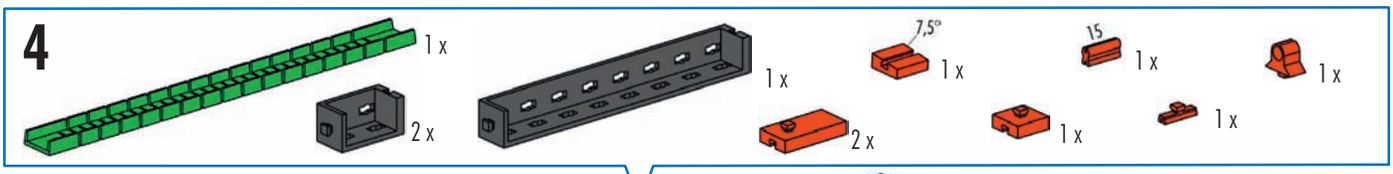
4
1 x
2 x
1 x
2 x
7,5°
1 x
15
1 x
1 x
1 x
1 x

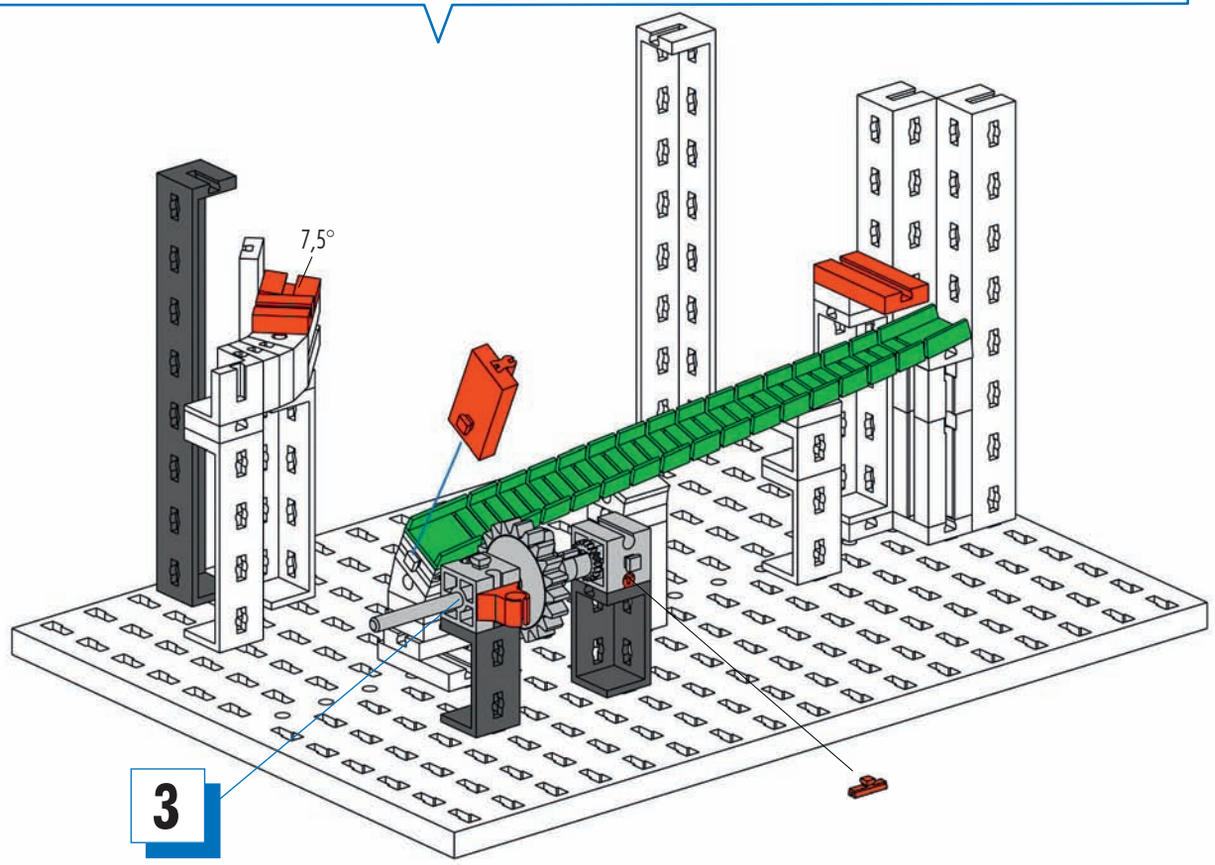
7,5°
3

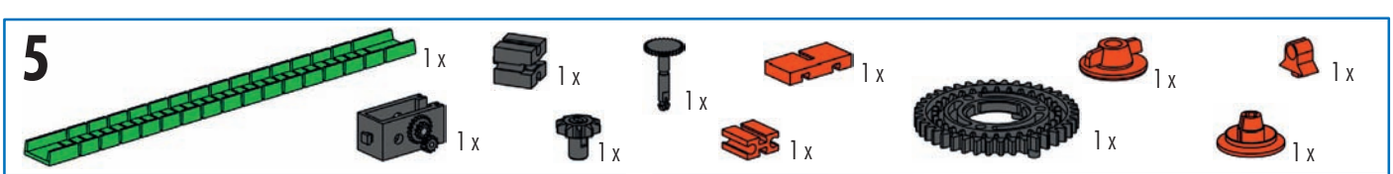
5
1 x
1 x
1 x
1 x
1 x
1 x
1 x
1 x
1 x
1 x

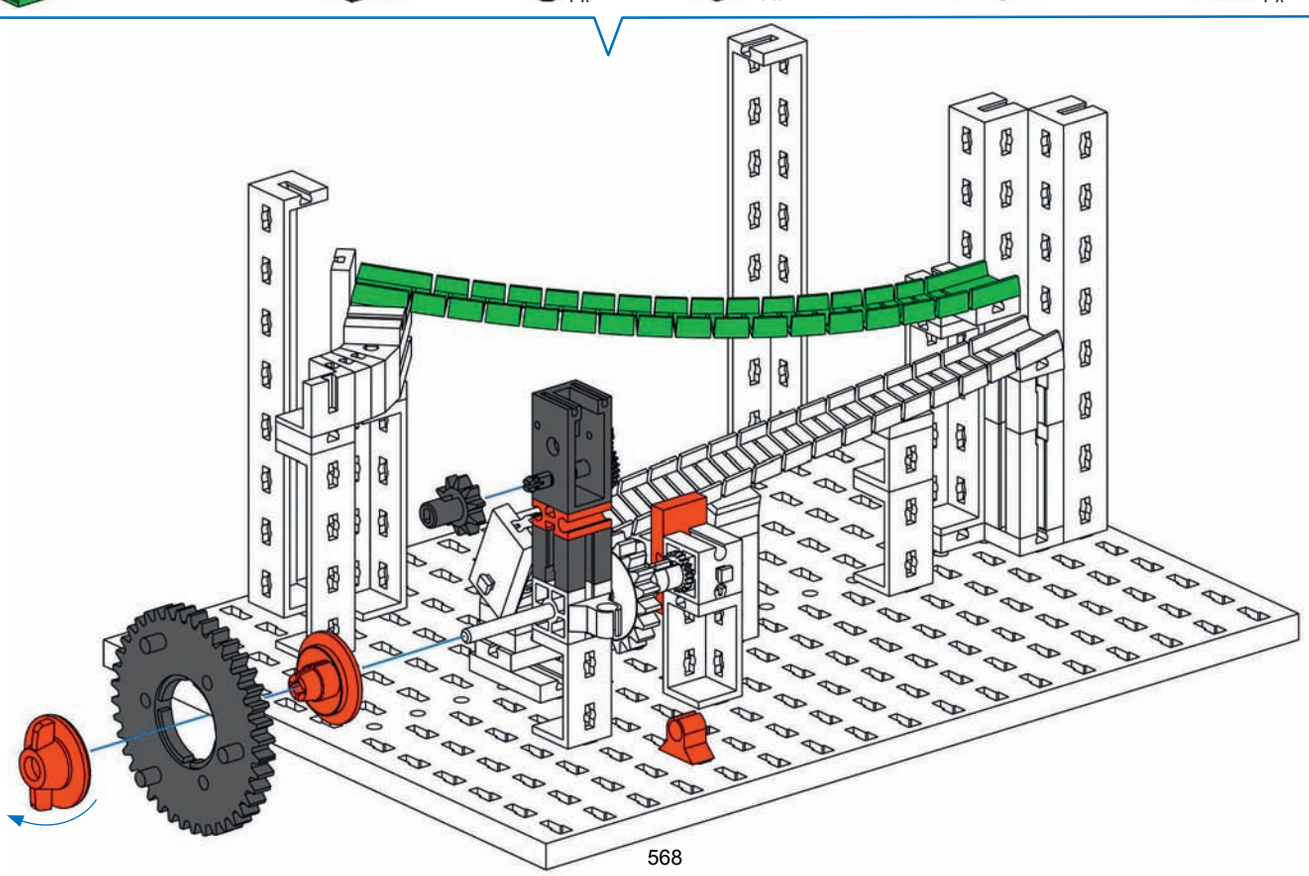
568

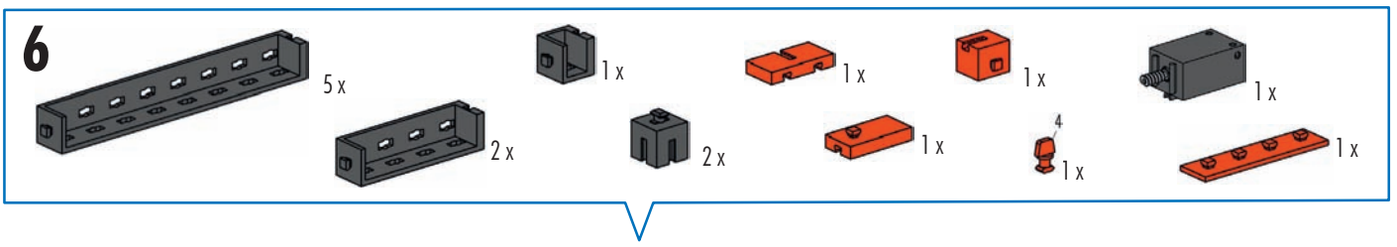
6
5 x
1 x
1 x
1 x
1 x
2 x
2 x
1 x
4
1 x
1 x

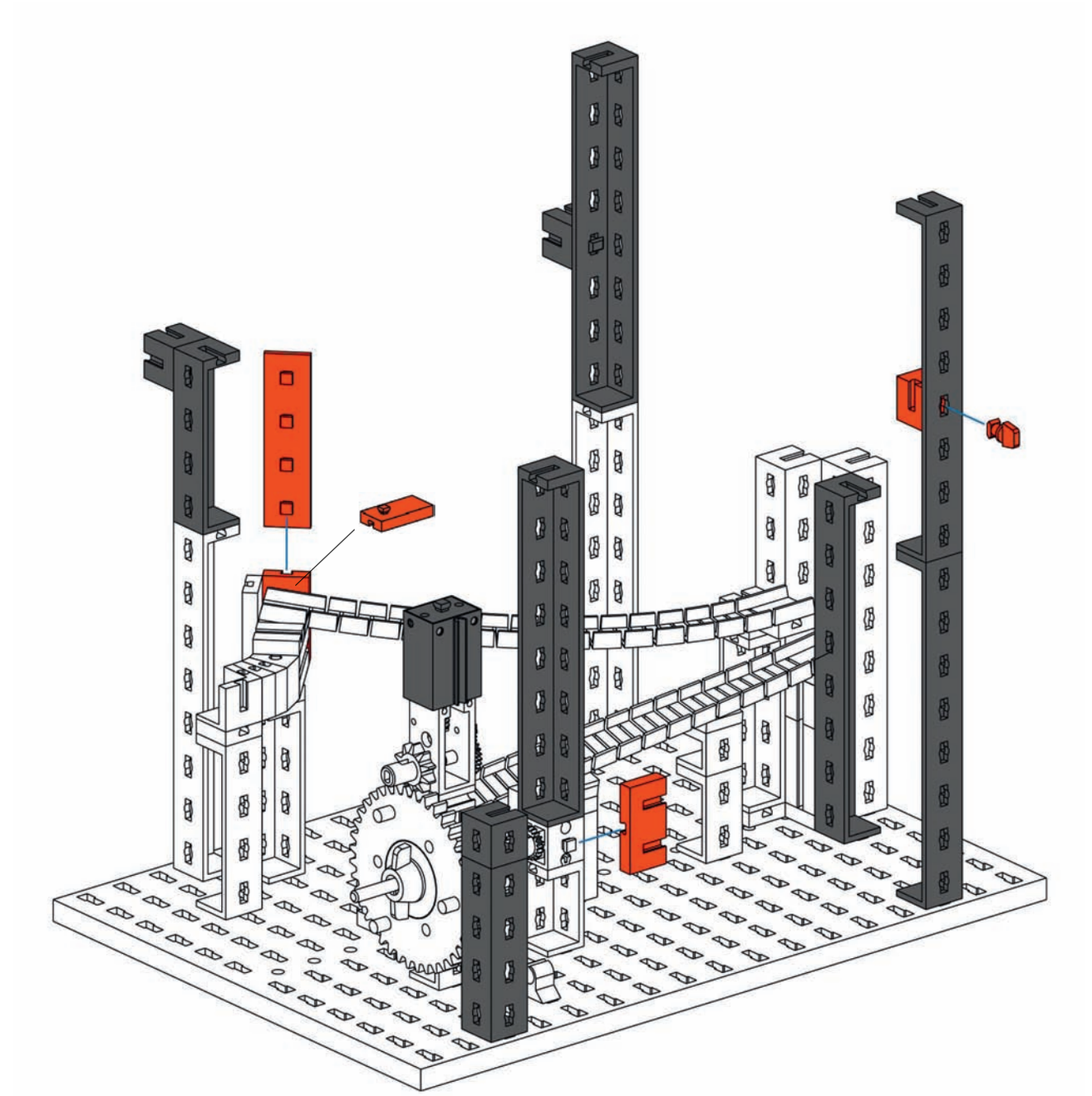

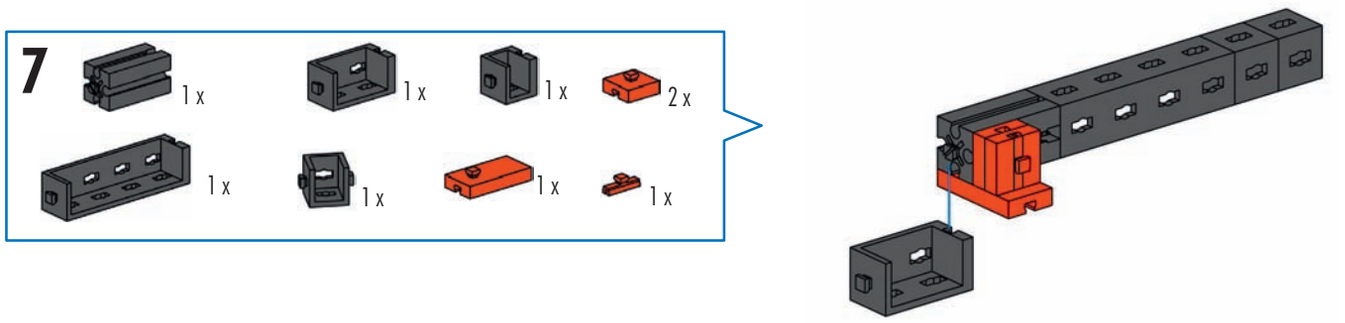
7
1 x
1 x
1 x
2 x
1 x
1 x
1 x
1 x

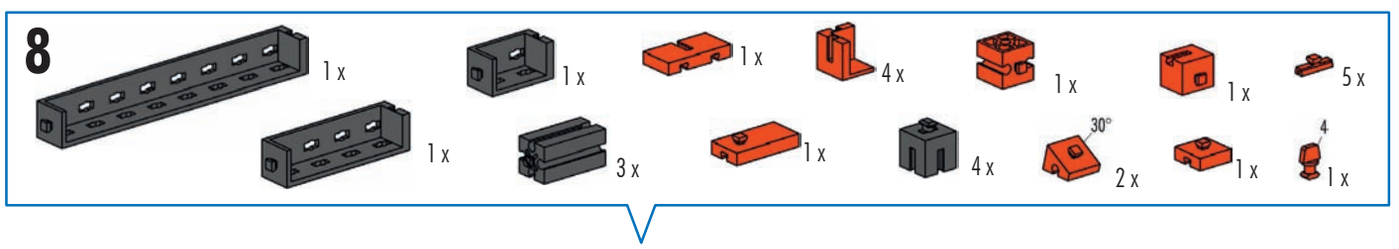
8
1 x
1 x
1 x
4 x
1 x
1 x
5 x
1 x
3 x
1 x
4 x
30°
2 x
1 x
4
1 x

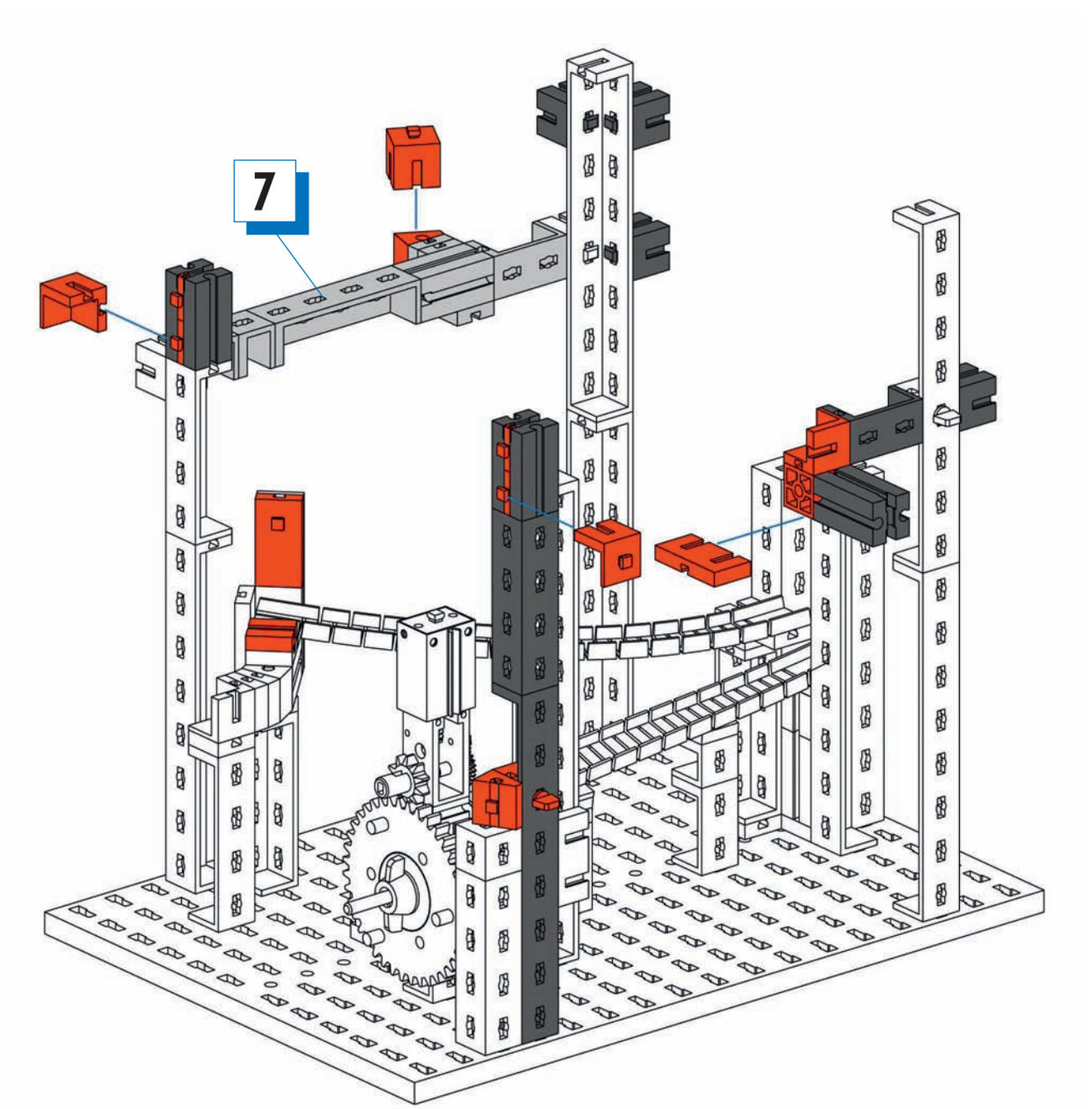
7

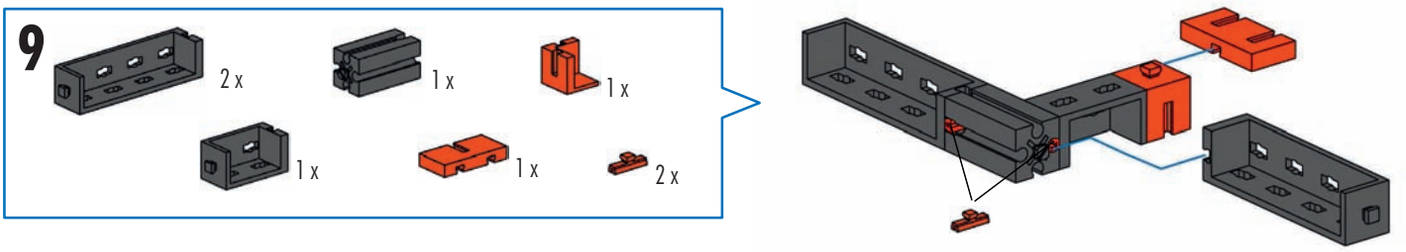
9
2 x
1 x
1 x
1 x
1 x
2 x

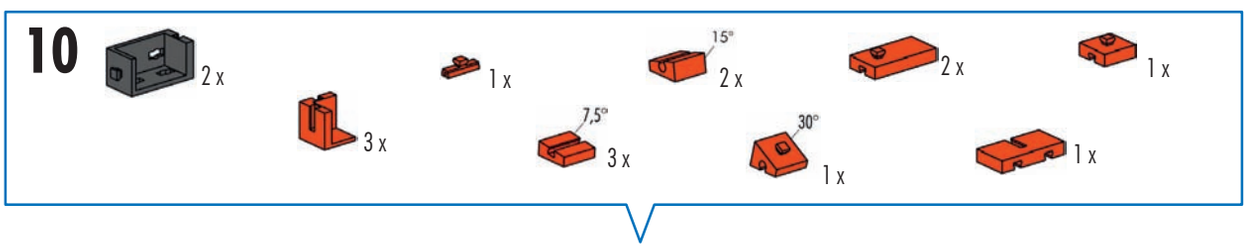
10
2 x
1 x
15°
2 x
2 x
1 x
3 x
7,5°
3 x
30°
1 x
1 x

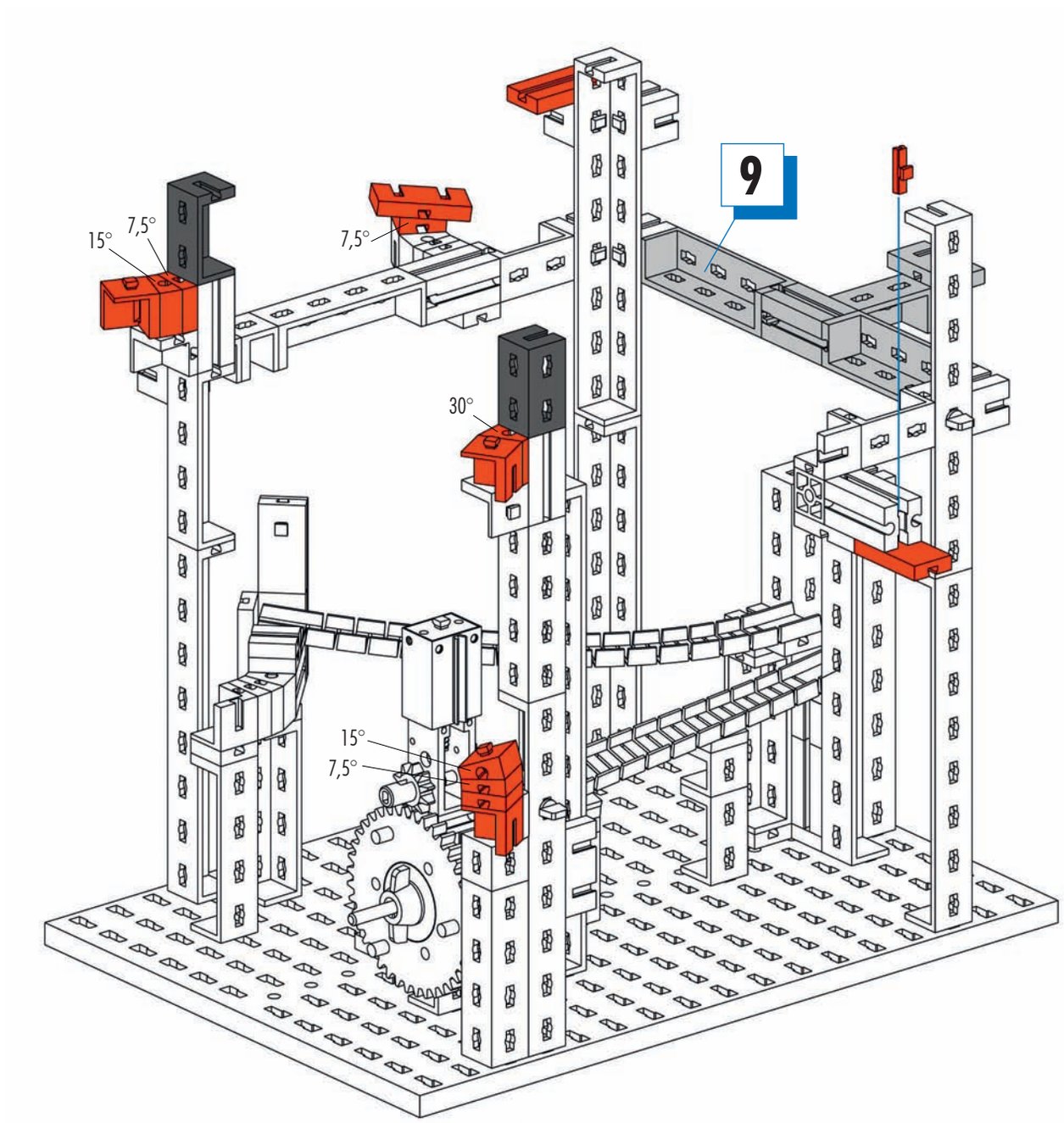
9
15°
7,5°
7,5°
30°
15°
7,5°

571

11

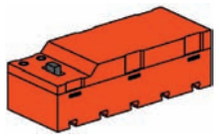

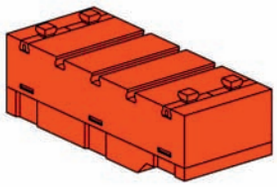

12

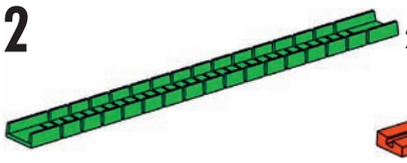

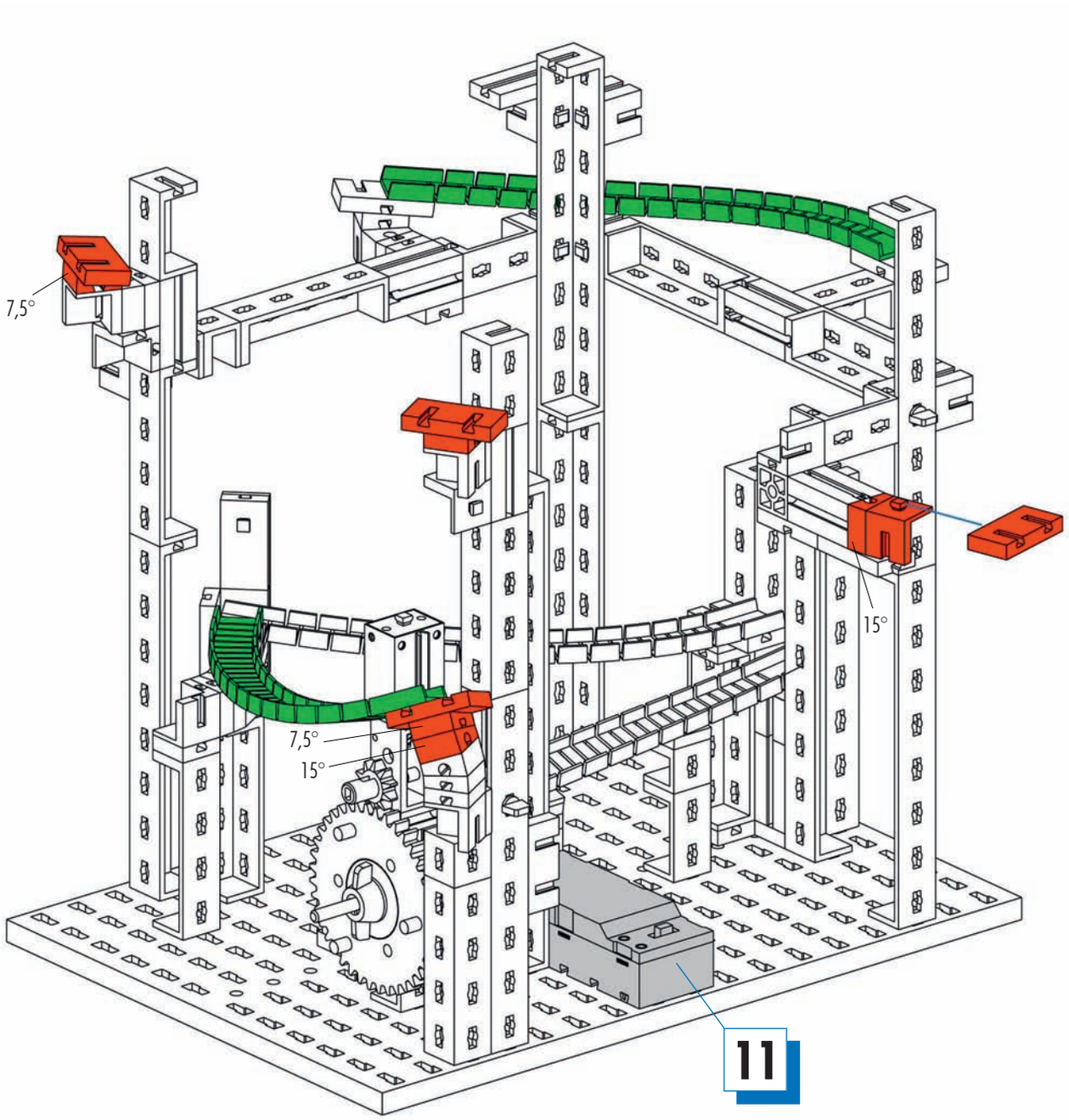

13

2 x 1 x 1 x 1 x 1 x 1 x 1 x 1 x 7,5° 1 x 1 x

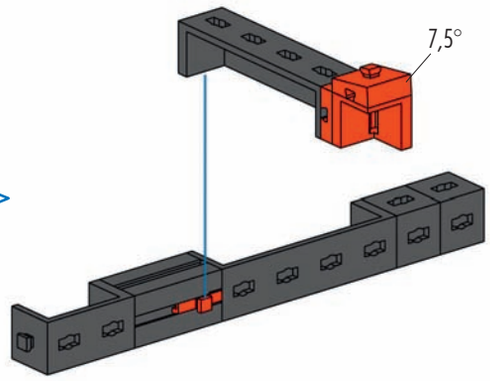

14

1 x 4 x 1 x

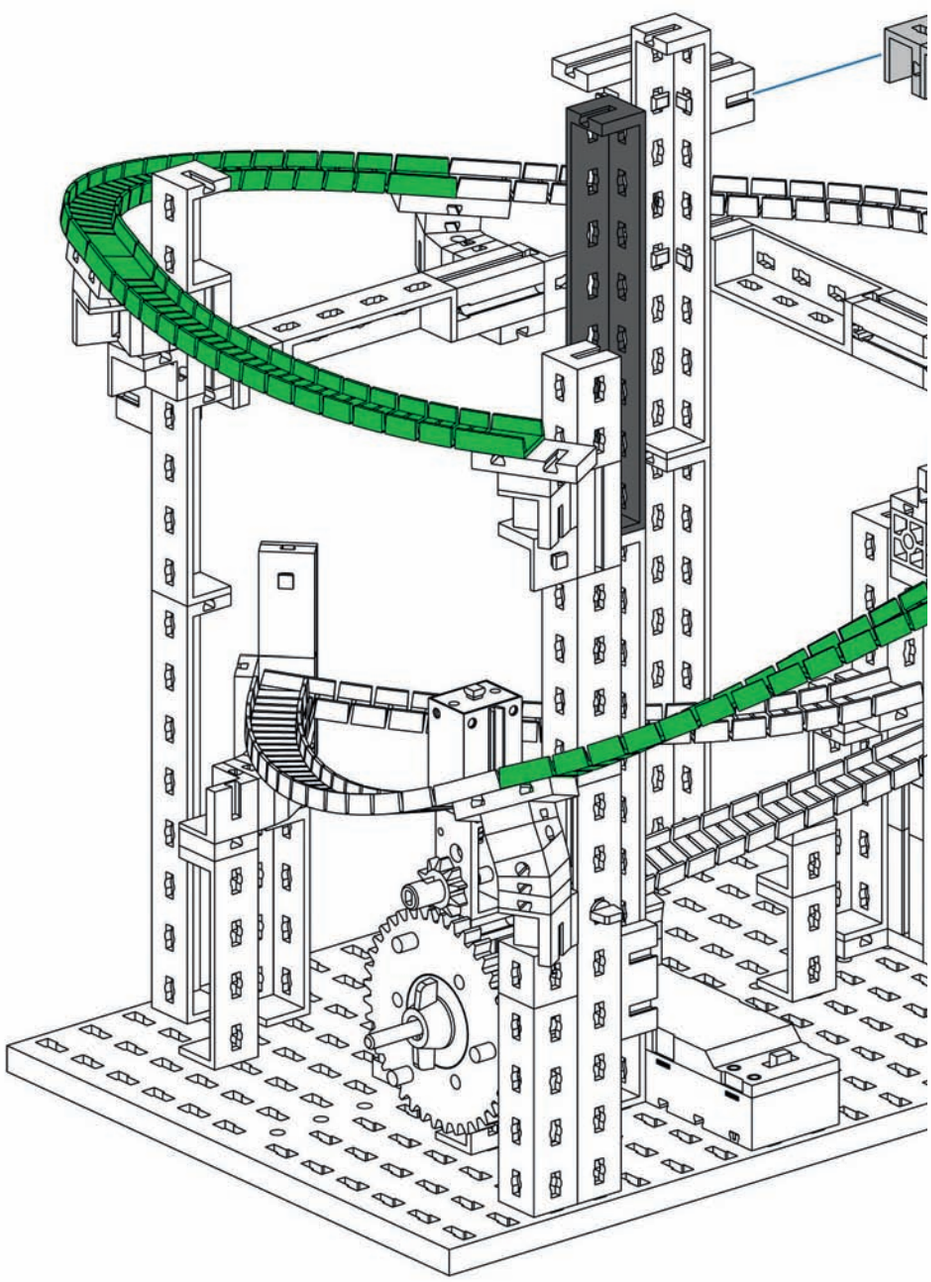

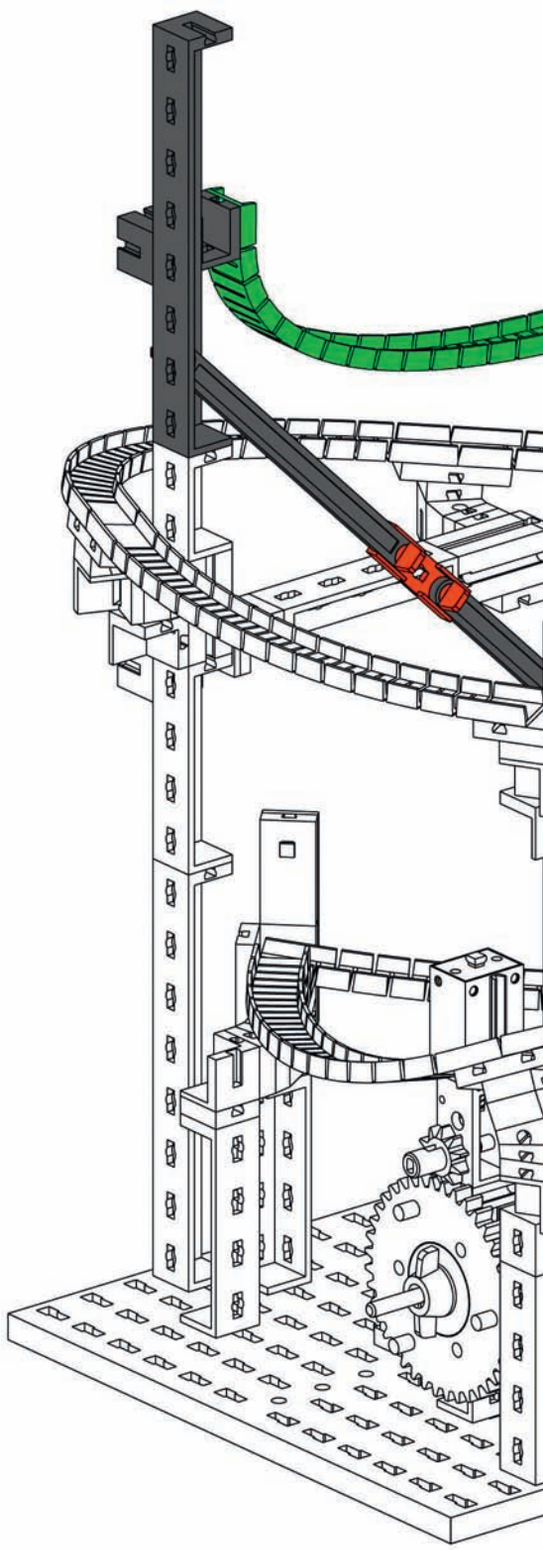

15

3 x

1 x

2 x

4 x

1 x

1 x

2 x

2 x

1 x

2 x

9 x

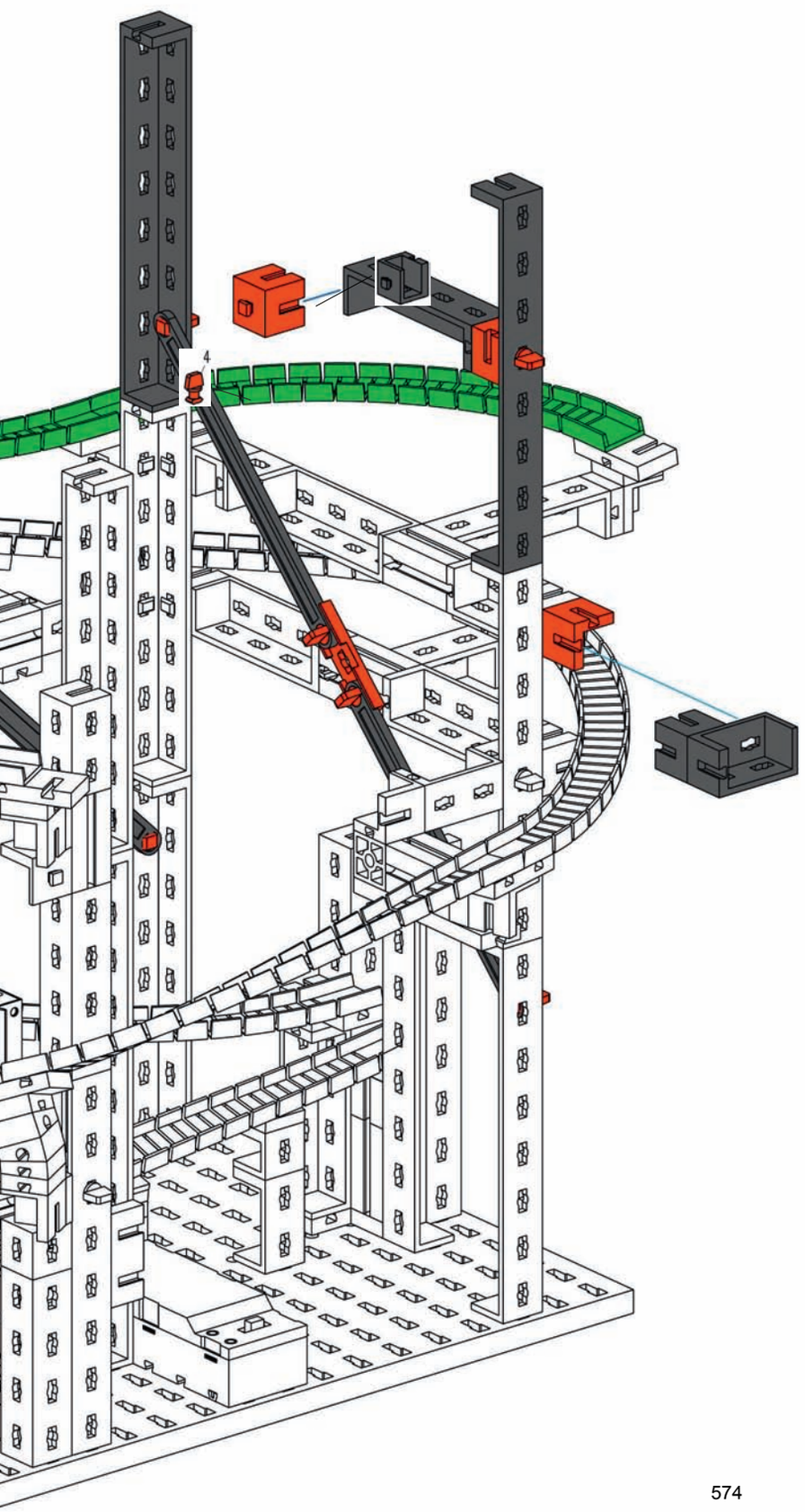

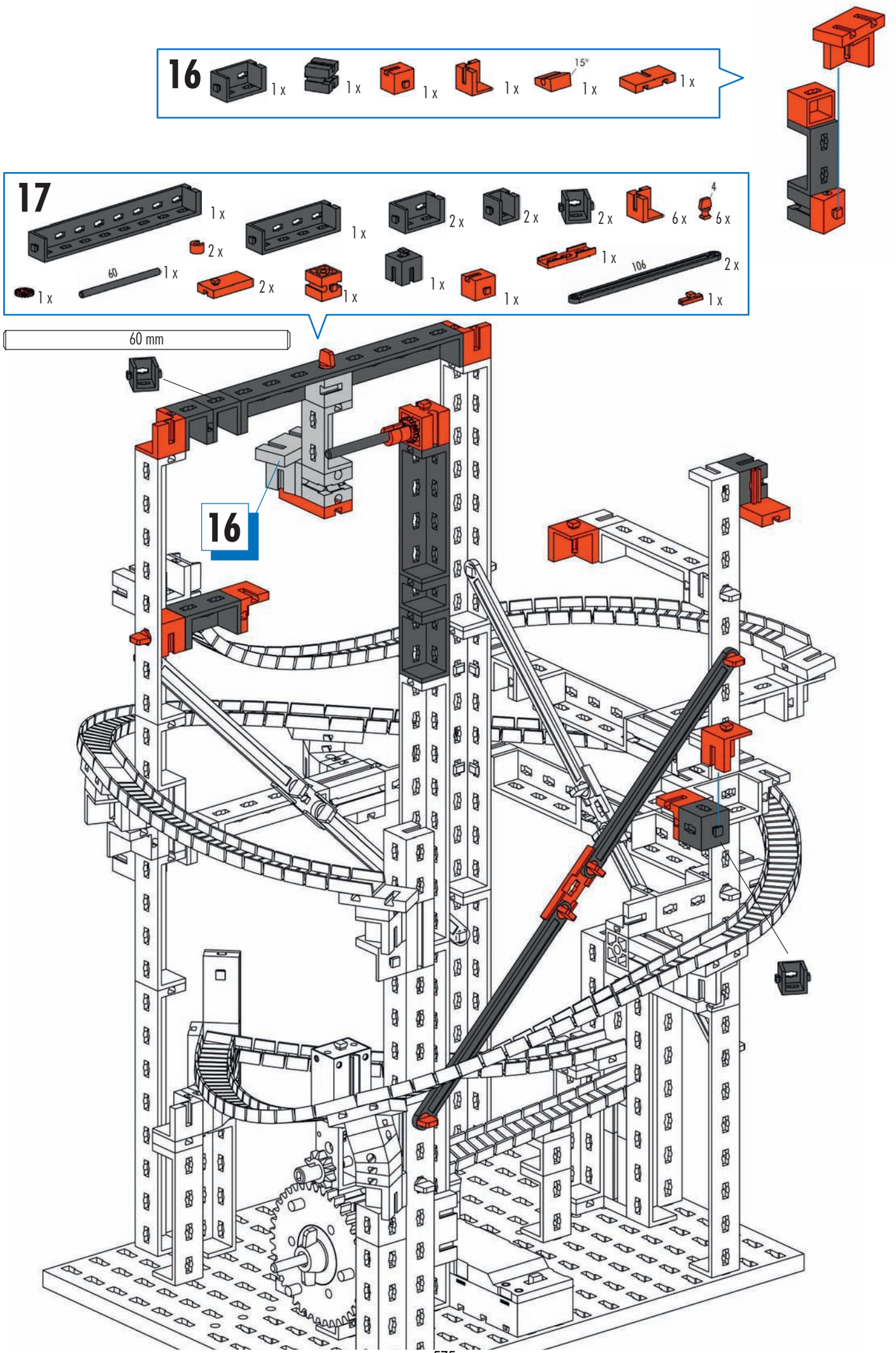
16
1 x
1 x
1 x
1 x
15°
1 x
1 x
17
1 x
2 x
1 x
60
1 x
1 x
2 x
1 x
2 x
2 x
2 x
6 x
4
6 x
1 x
1 x
106
2 x
1 x
1 x
60 mm
16

575

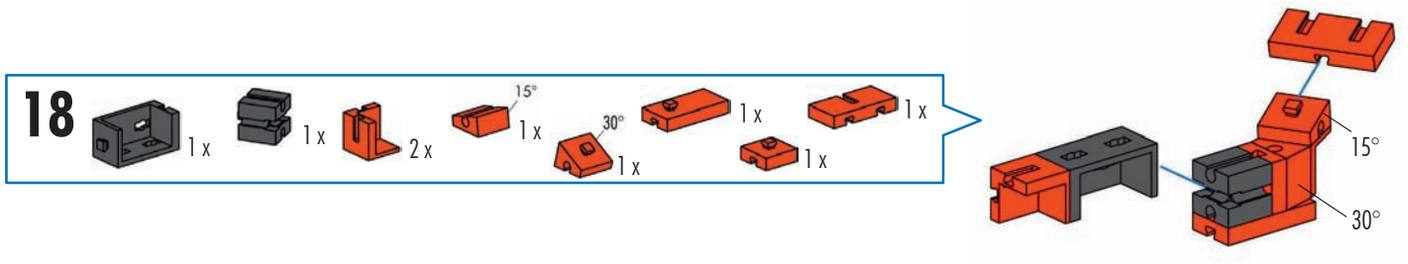
18
1 x
1 x
2 x
15°
1 x
30°
1 x
1 x
1 x
15°
30°

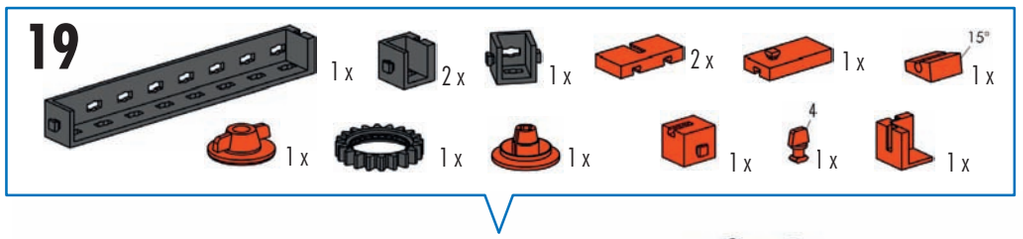
19
1 x
2 x
1 x
2 x
1 x
15°
1 x
1 x
1 x
1 x
4
1 x
1 x

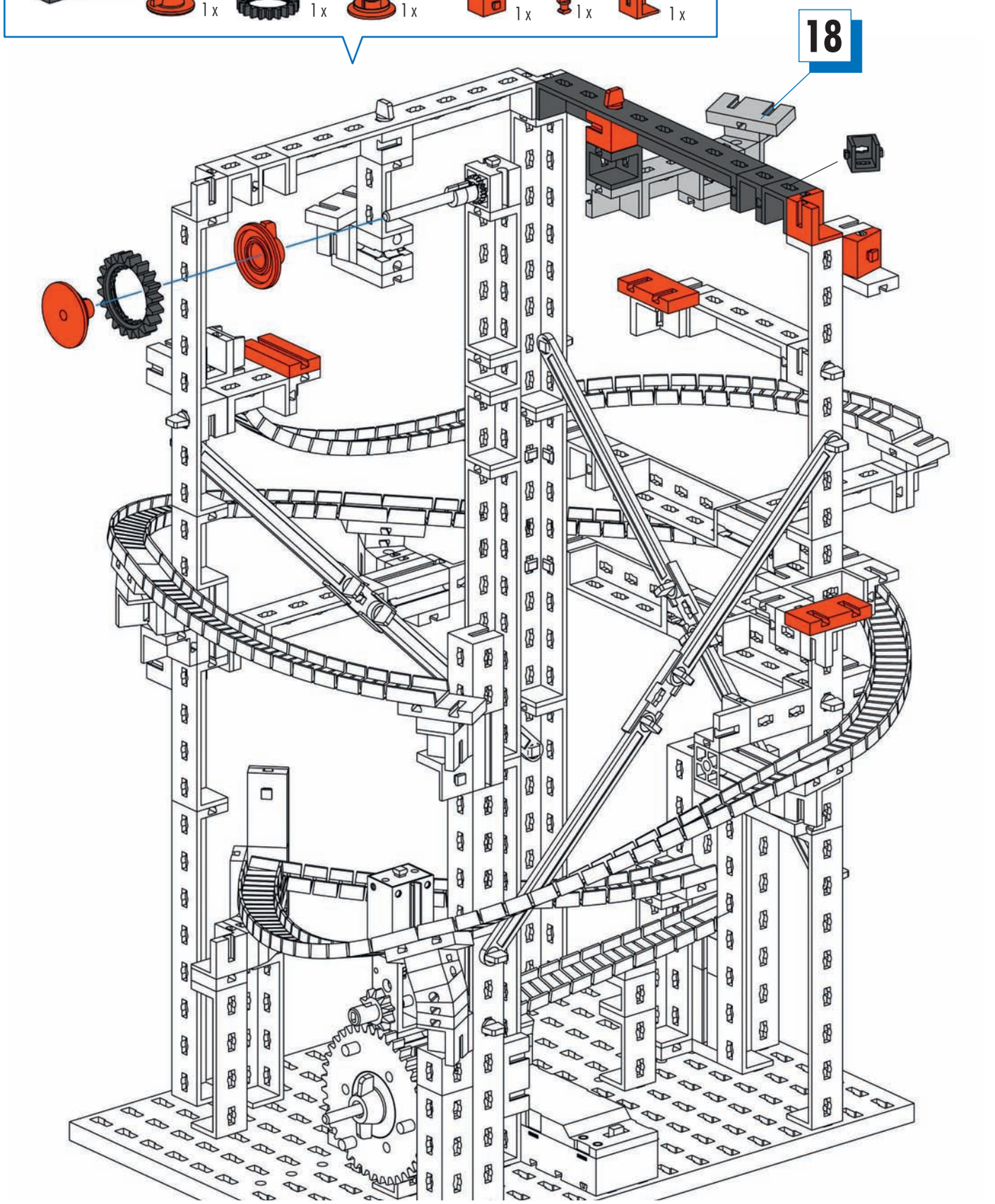
18

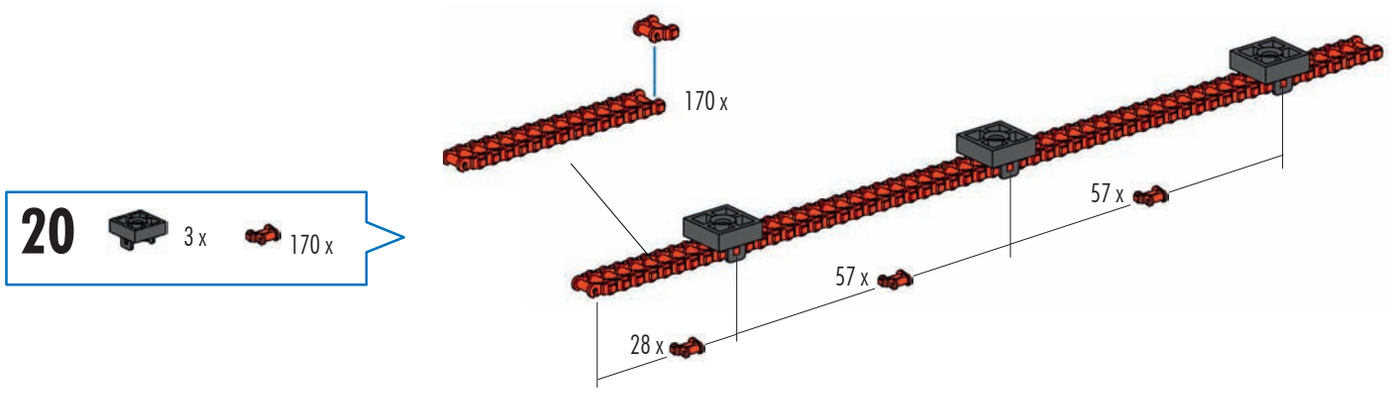

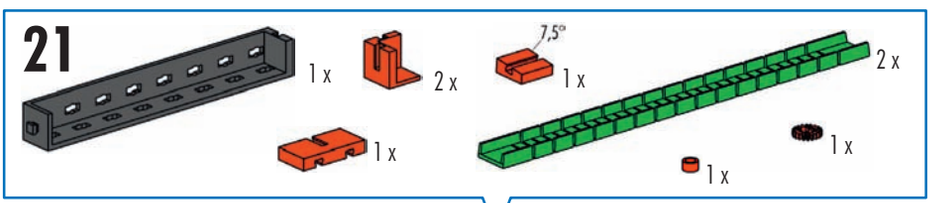

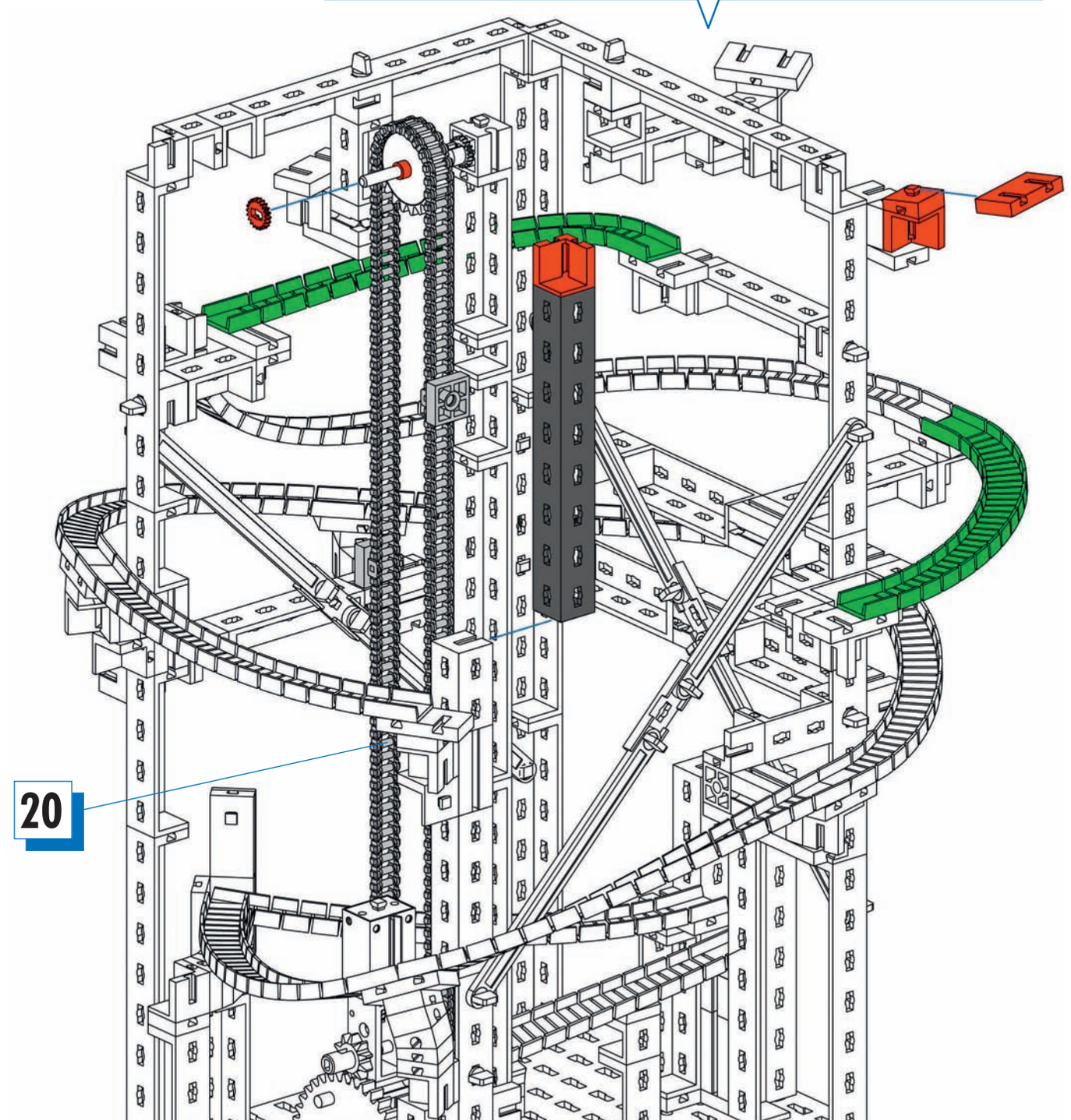

577

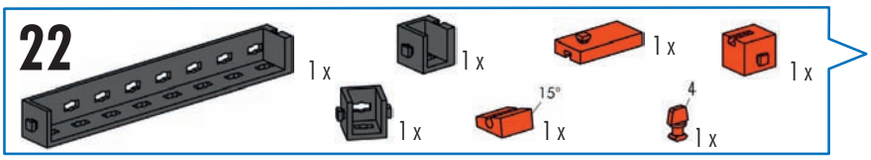

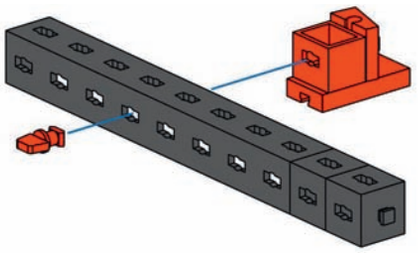

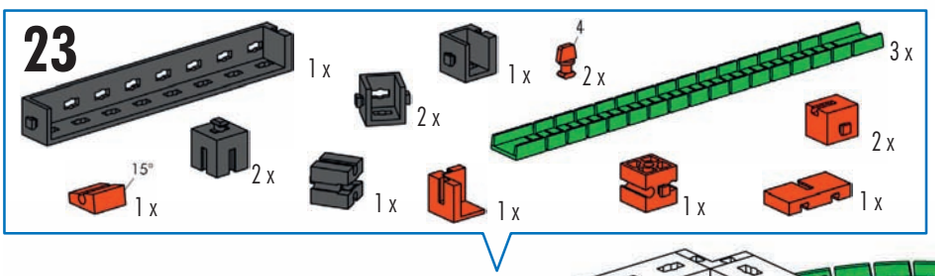

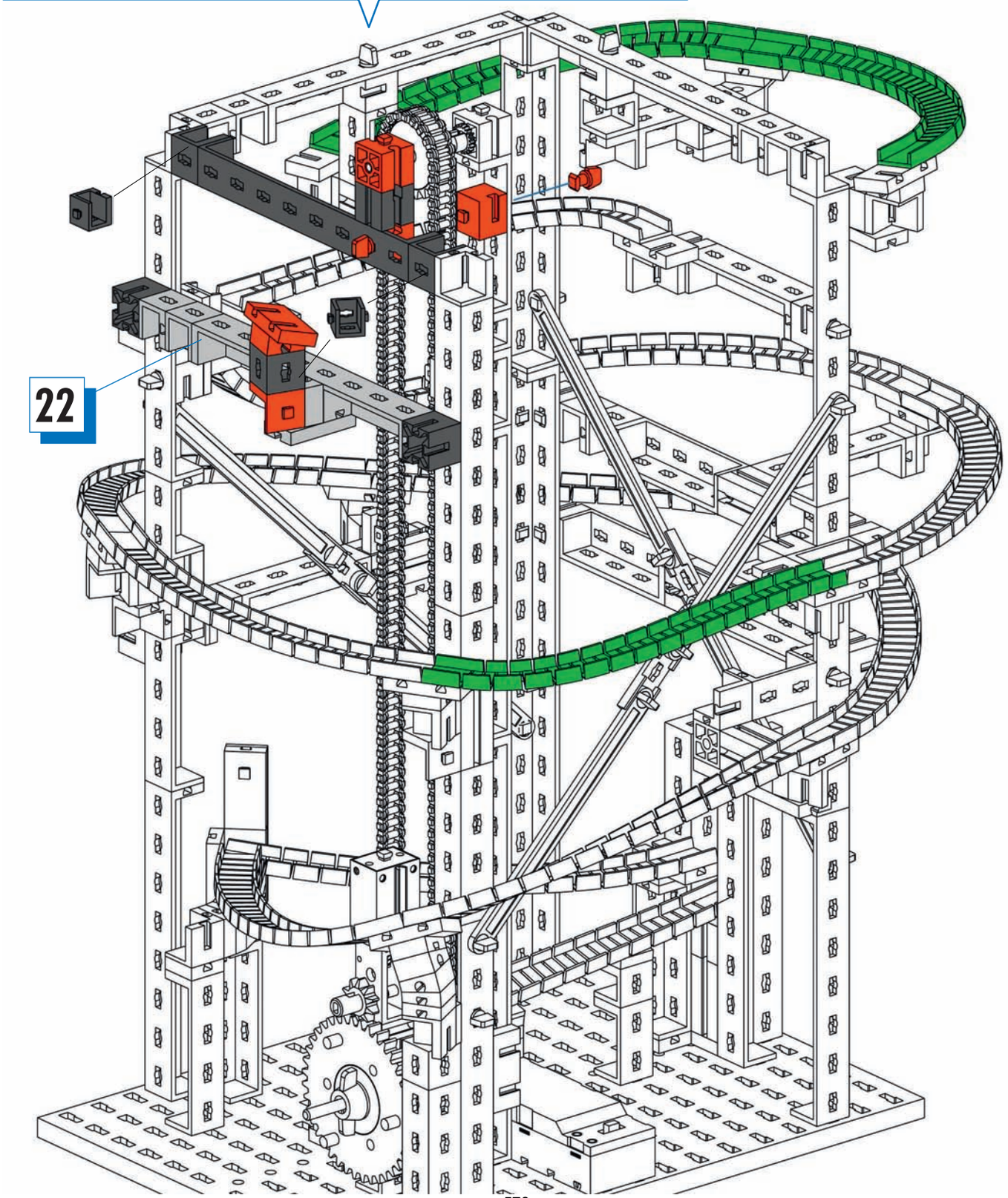

578

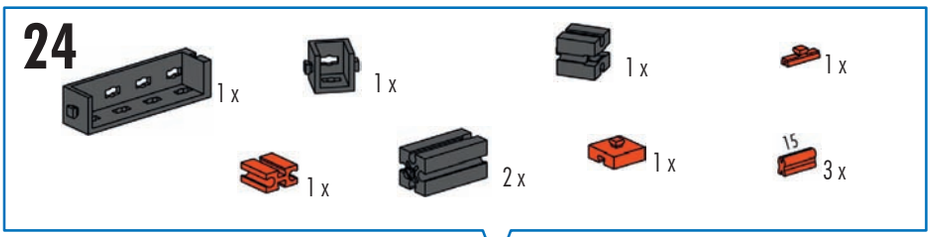
24
1 x
1 x
1 x
1 x
1 x
2 x
1 x
15
3 x

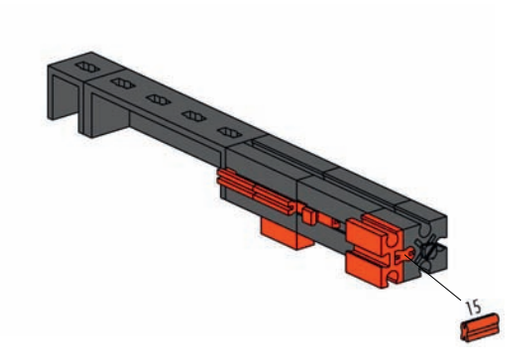
15

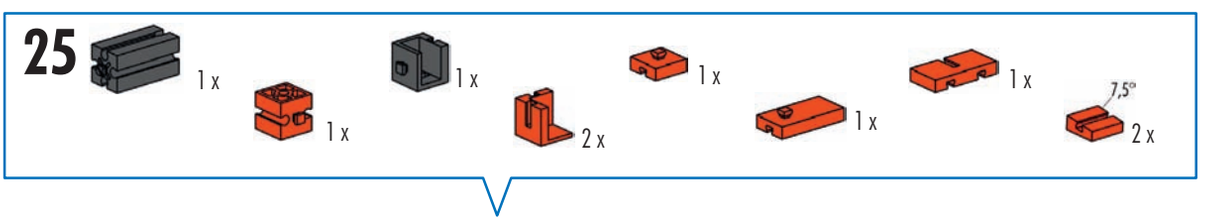
25
1 x
1 x
1 x
2 x
1 x
1 x
1 x
7,5°
2 x

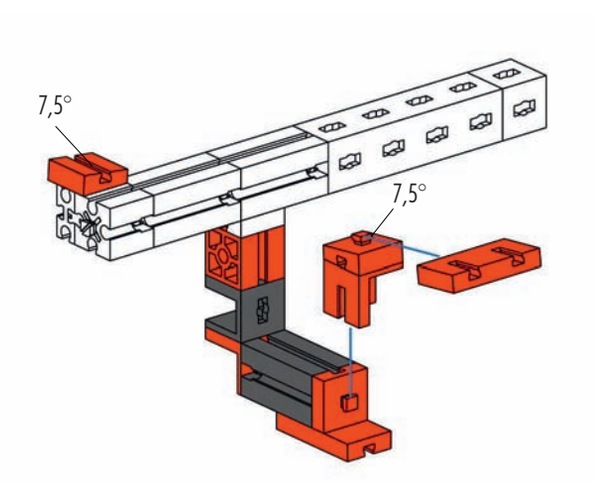
7,5°
7,5°

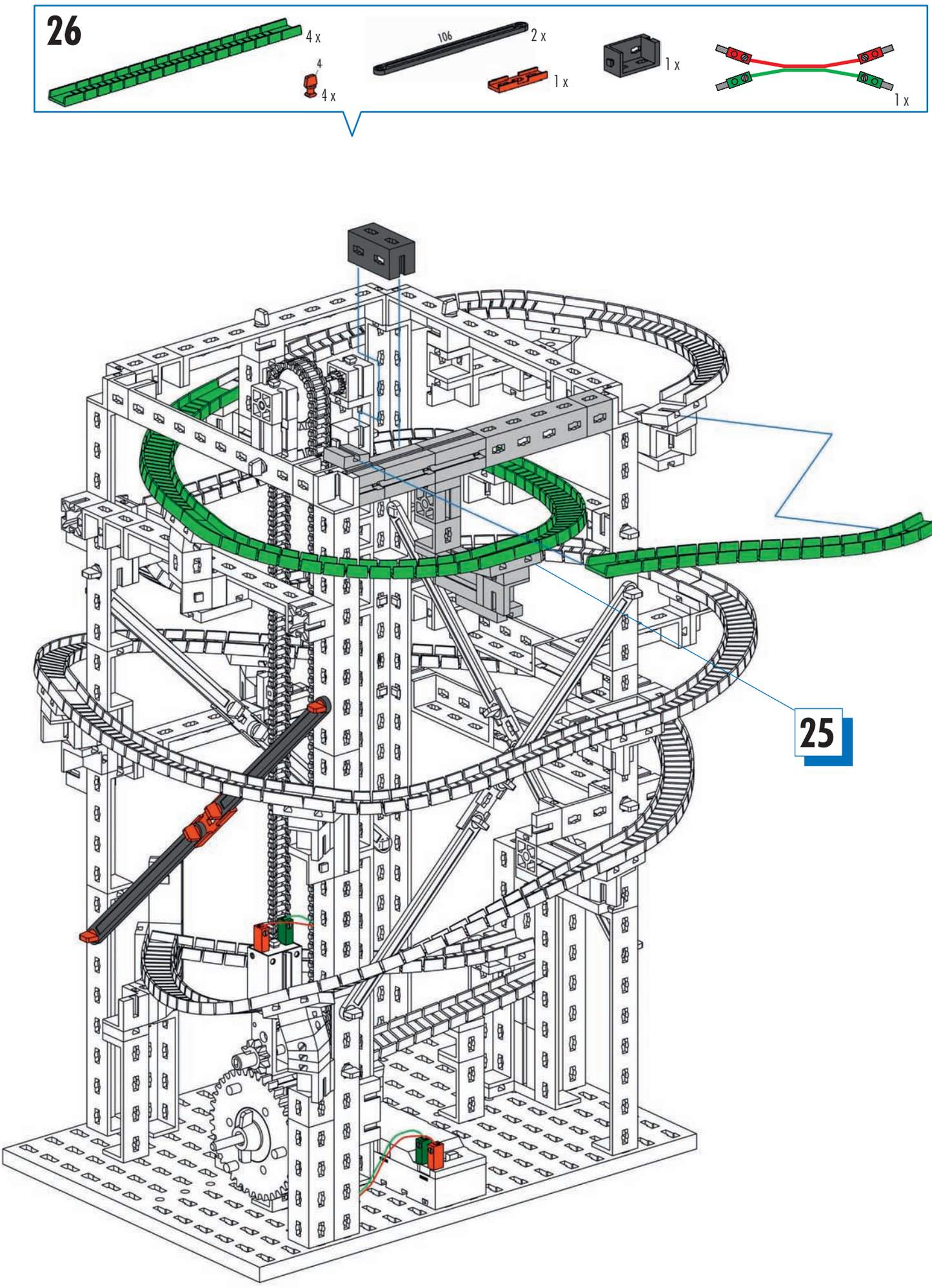
26
4 x
4
4 x
106
2 x
1 x
1 x
1 x
25

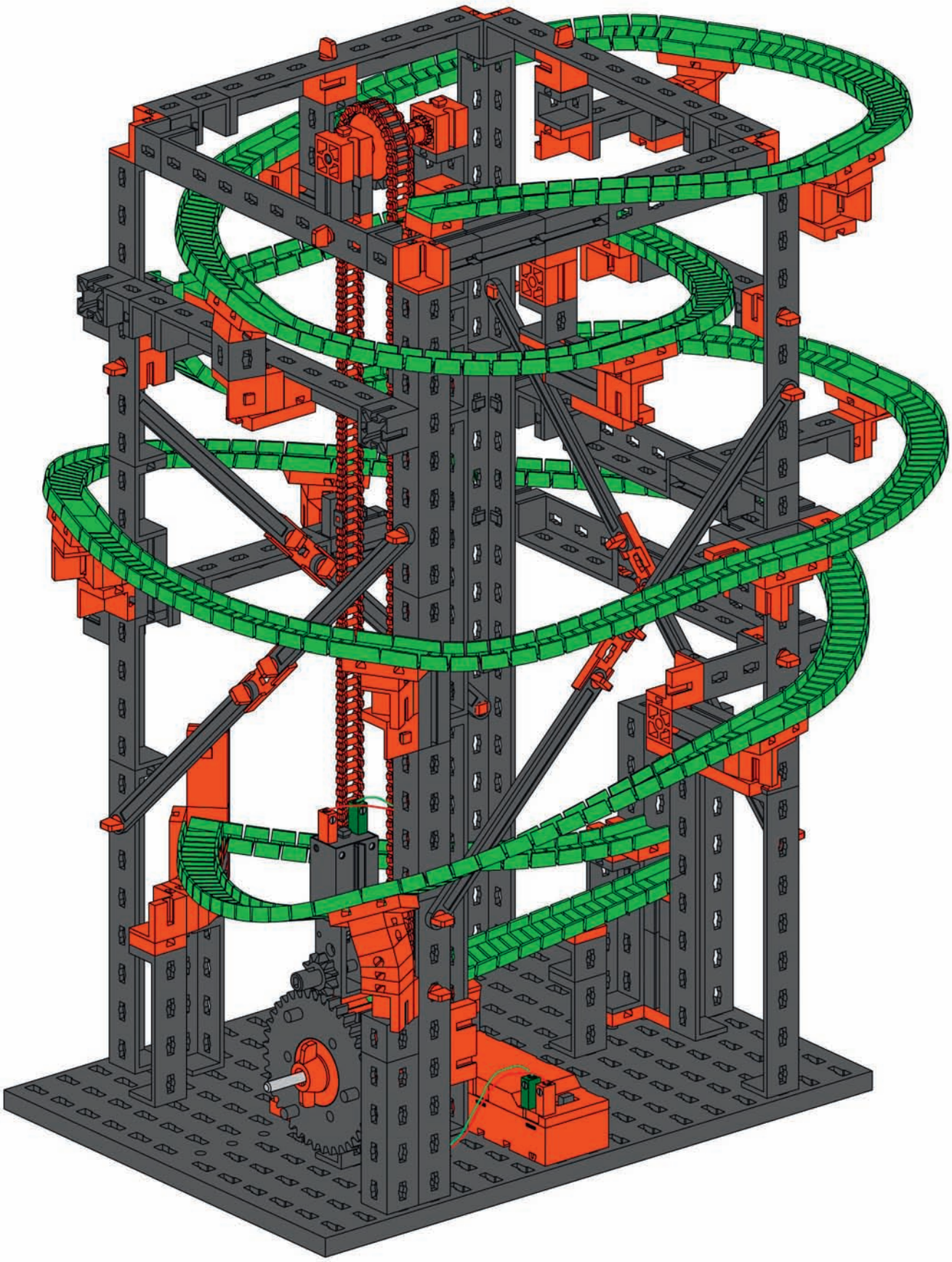

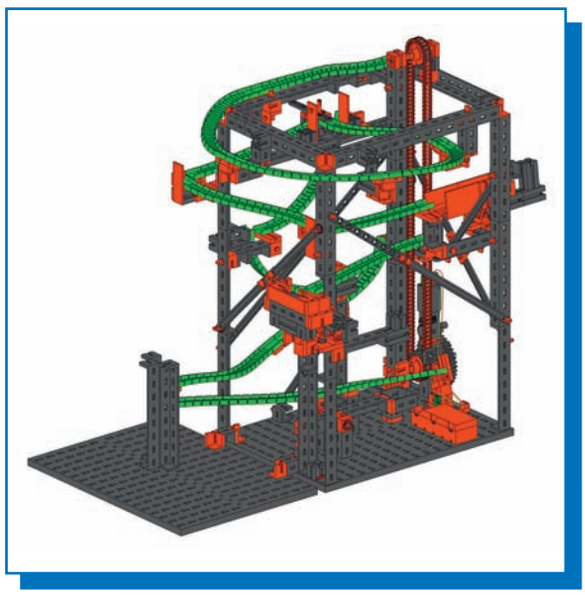

Parcours 2
Obstacle course 2
Parcours 2

Parcours 2
Pista de recorrido 2
Circuito 2

Circuito 2
Маршрут 2
滚珠弯道 2

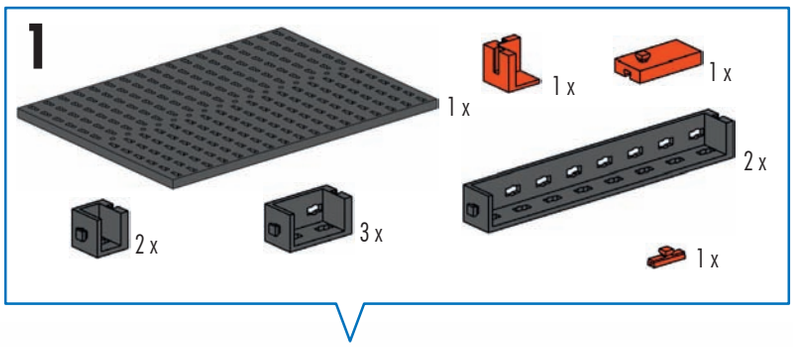

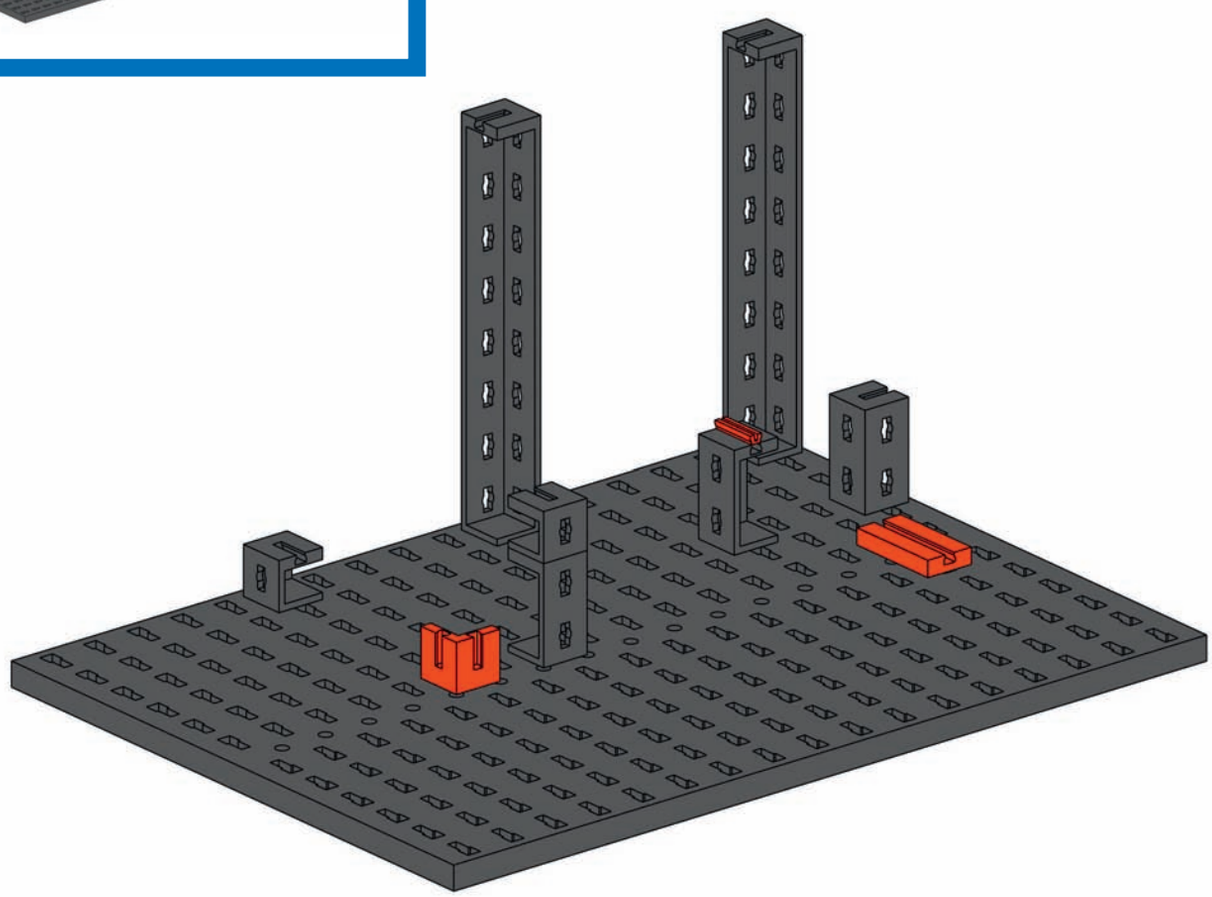

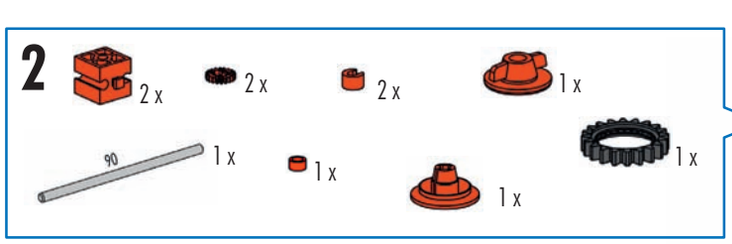

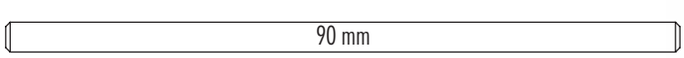

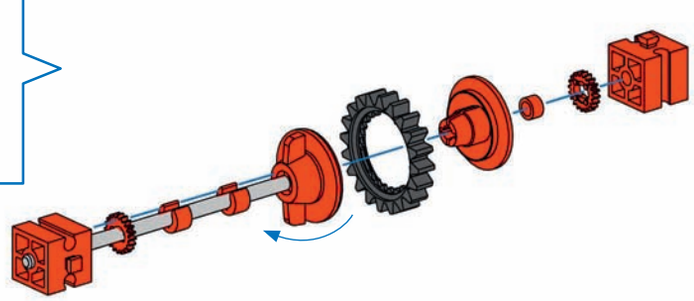

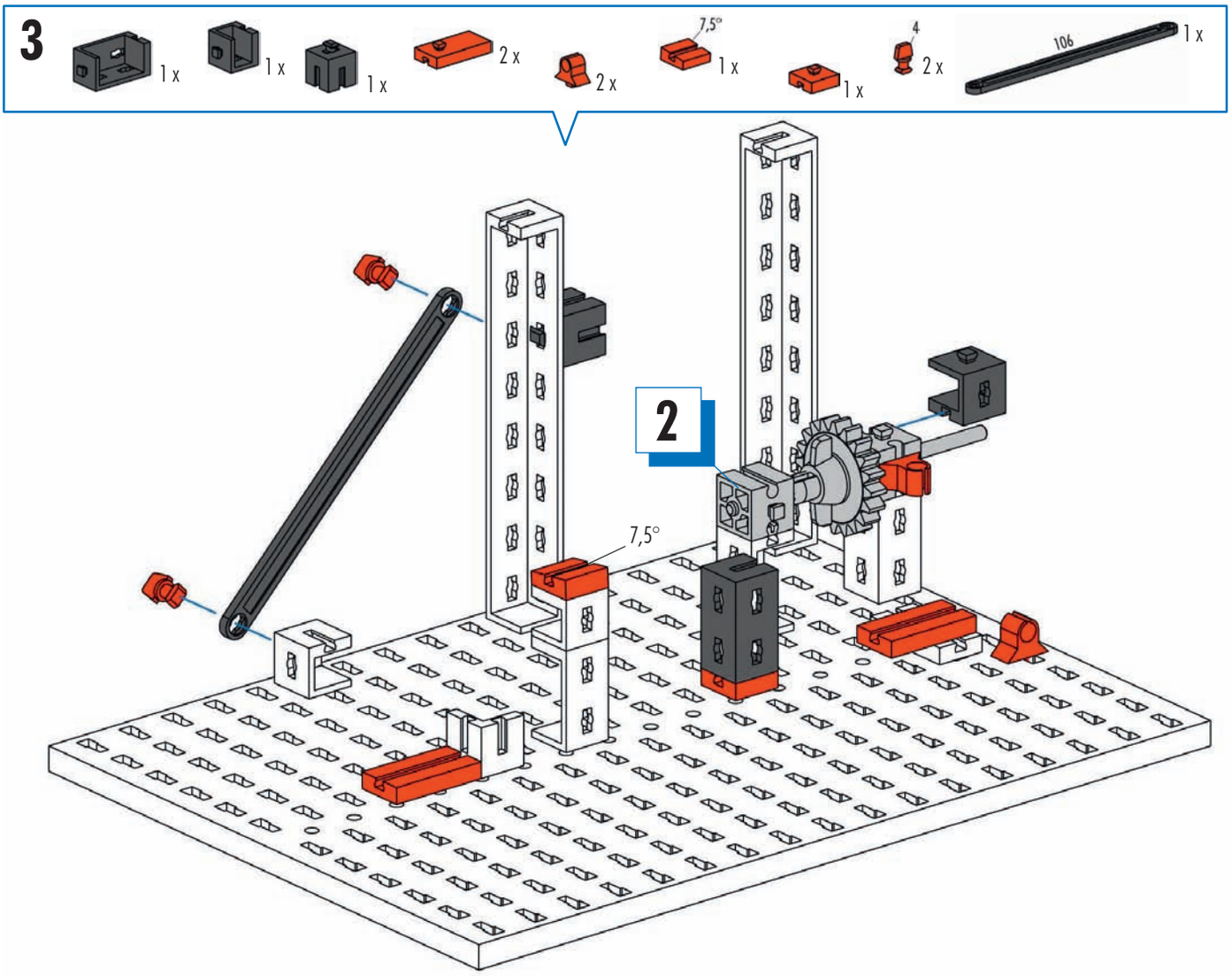

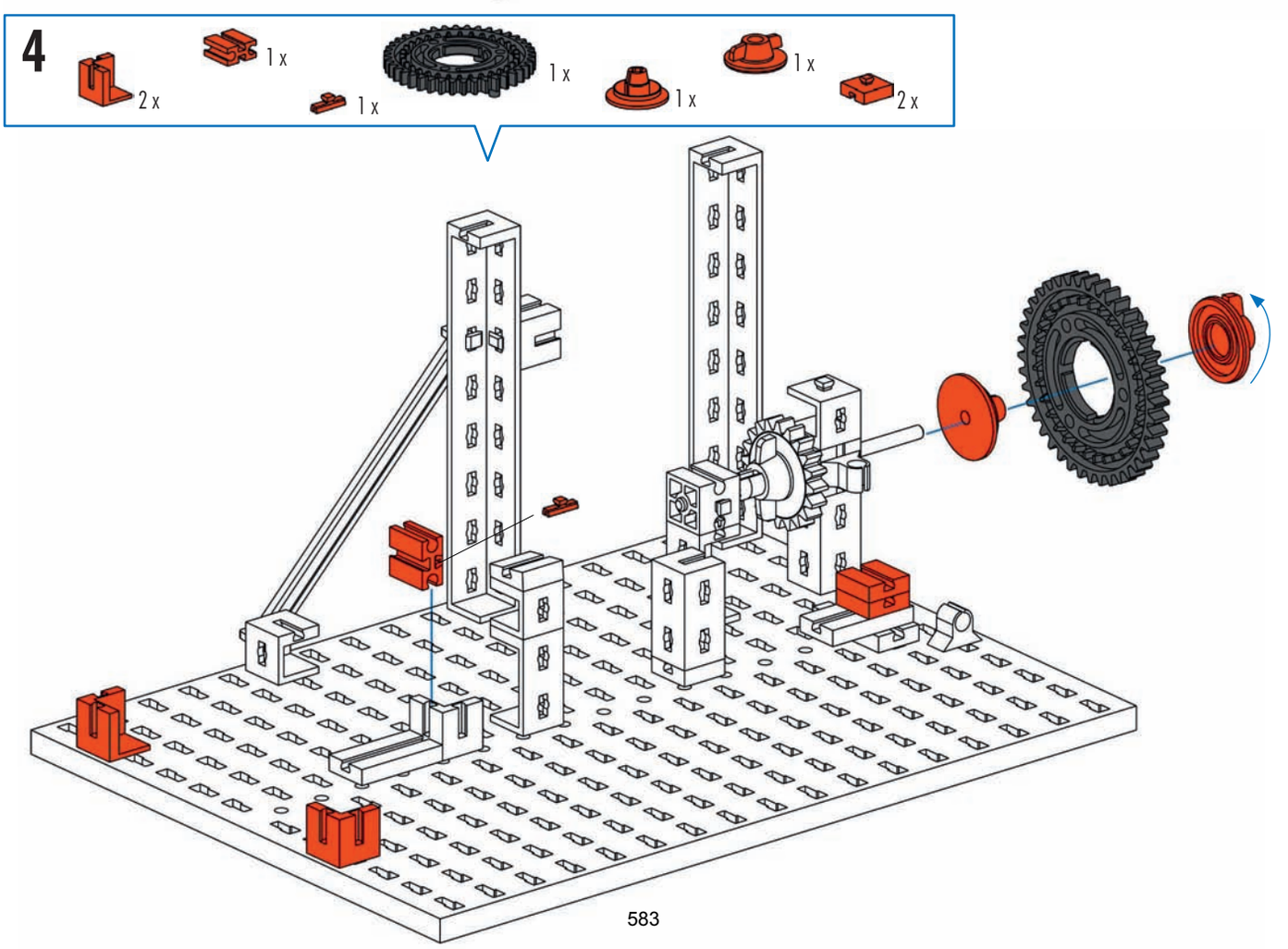

583

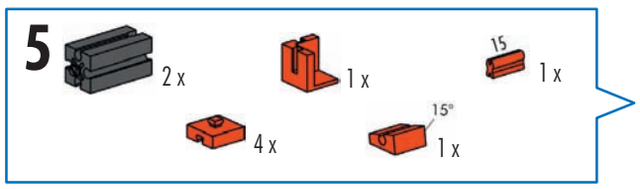
5
2 x
1 x
15
1 x
4 x
15°
1 x

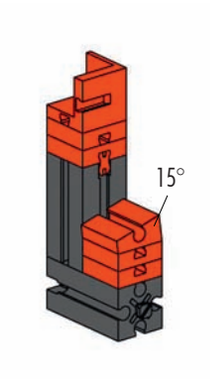
15°

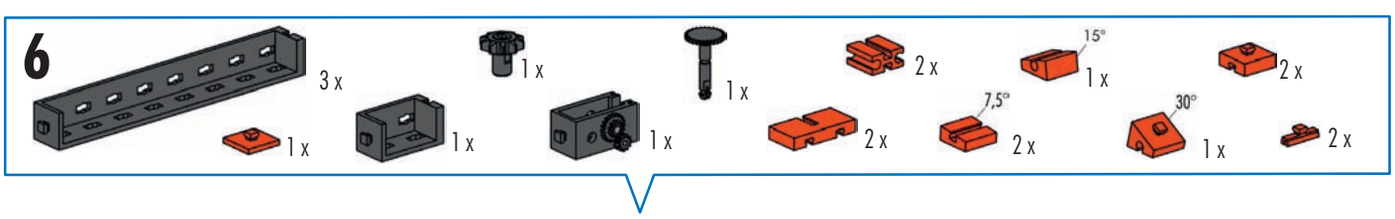
6
3 x
1 x
1 x
1 x
1 x
1 x
2 x
15°
1 x
2 x
7,5°
2 x
30°
1 x
2 x

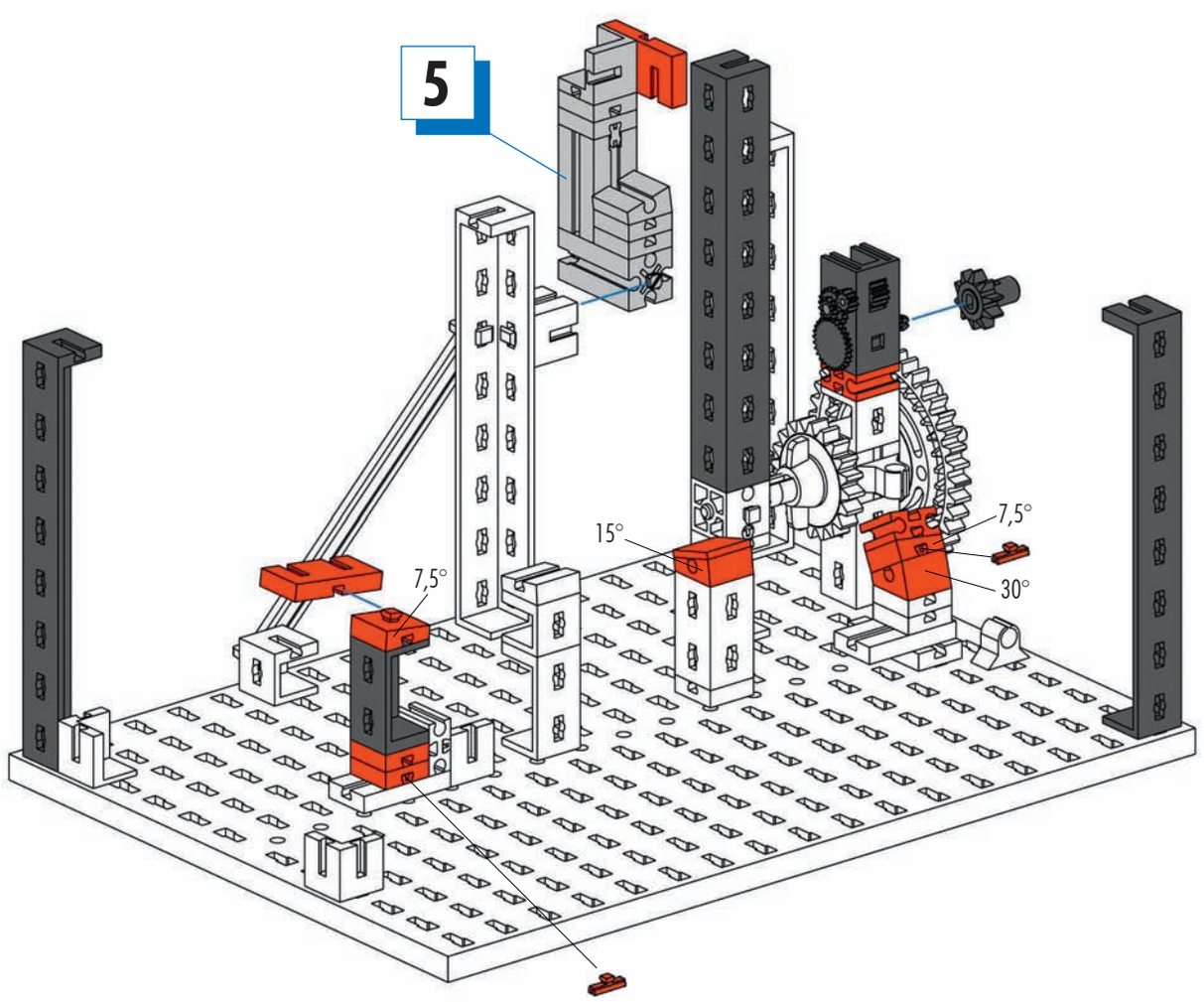
5
15°
7,5°
7,5°
30°

584

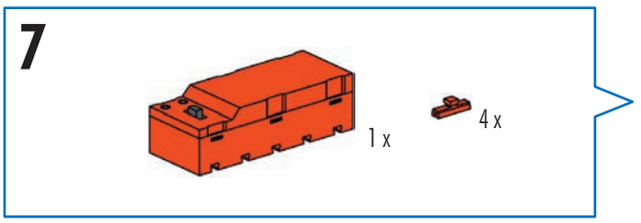
7
1 x
4 x

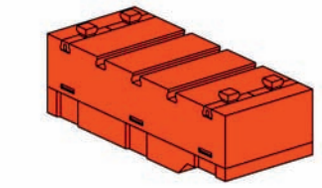

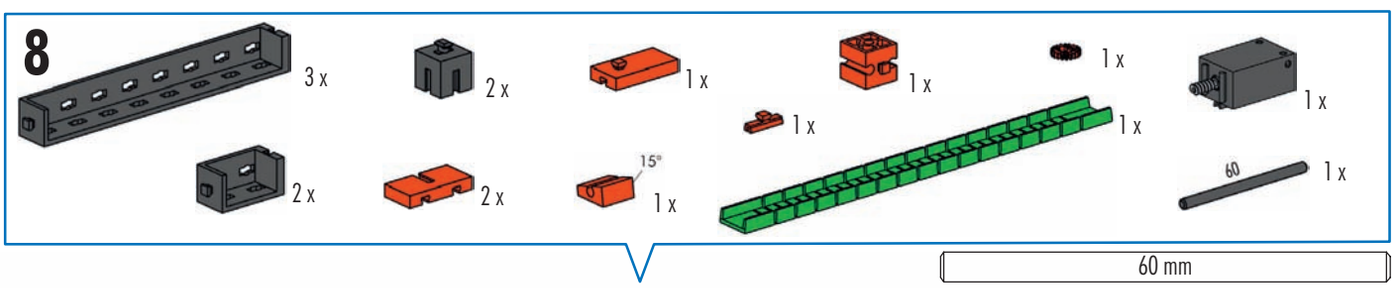
8
3 x
2 x
1 x
1 x
1 x
1 x
1 x
2 x
2 x
15°
1 x
1 x
60
1 x
60 mm

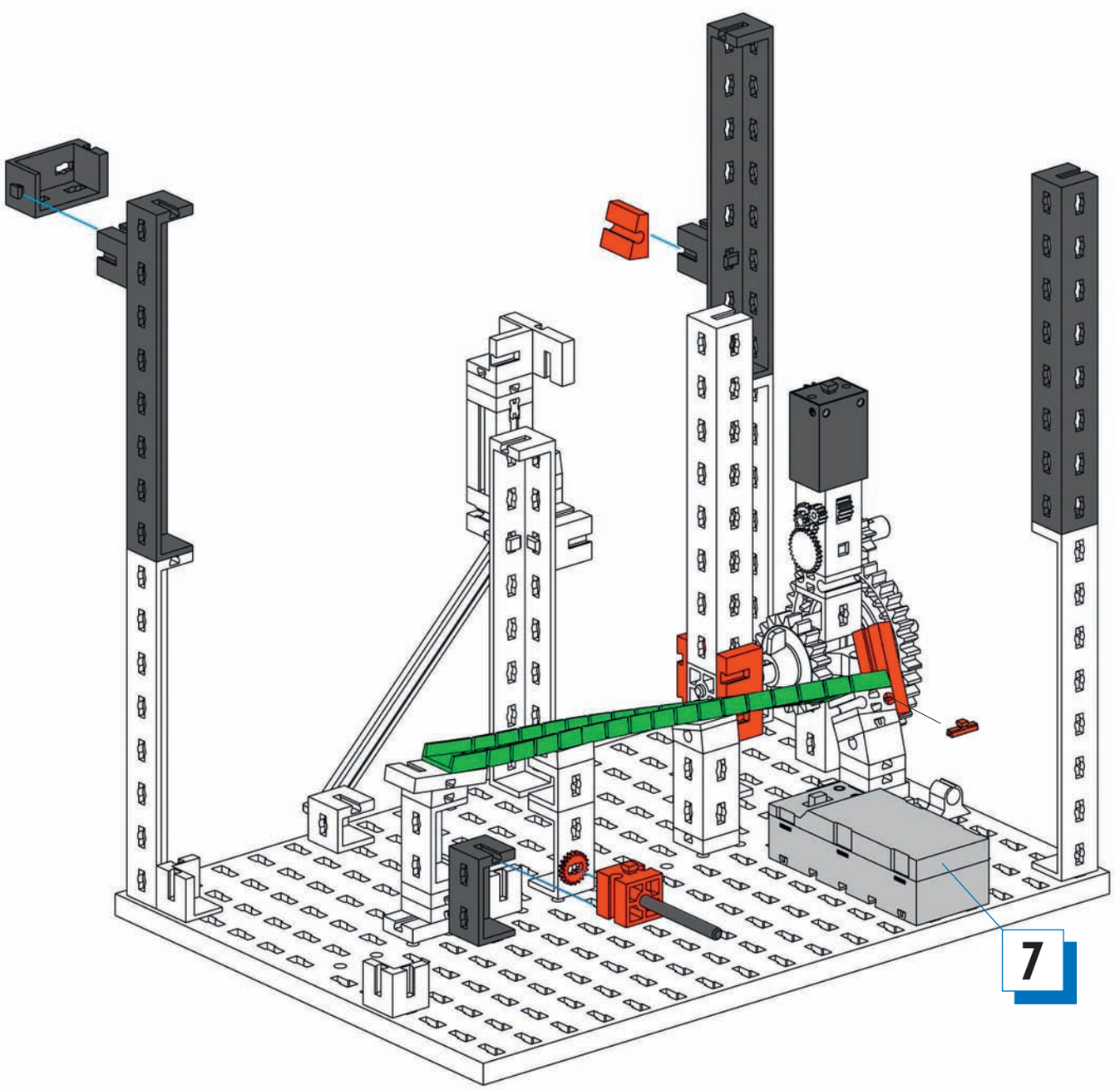
7

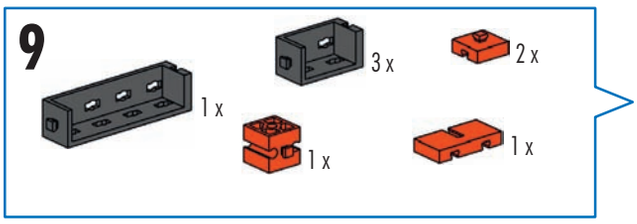
9
1 x
3 x
2 x
1 x
1 x

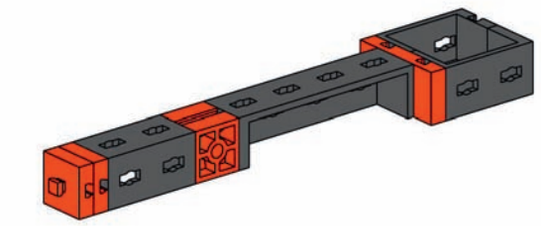

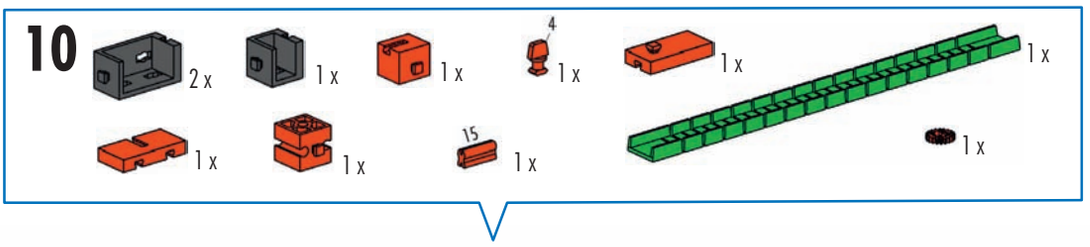
10
2 x
1 x
1 x
4
1 x
1 x
1 x
1 x
15
1 x
1 x
1 x

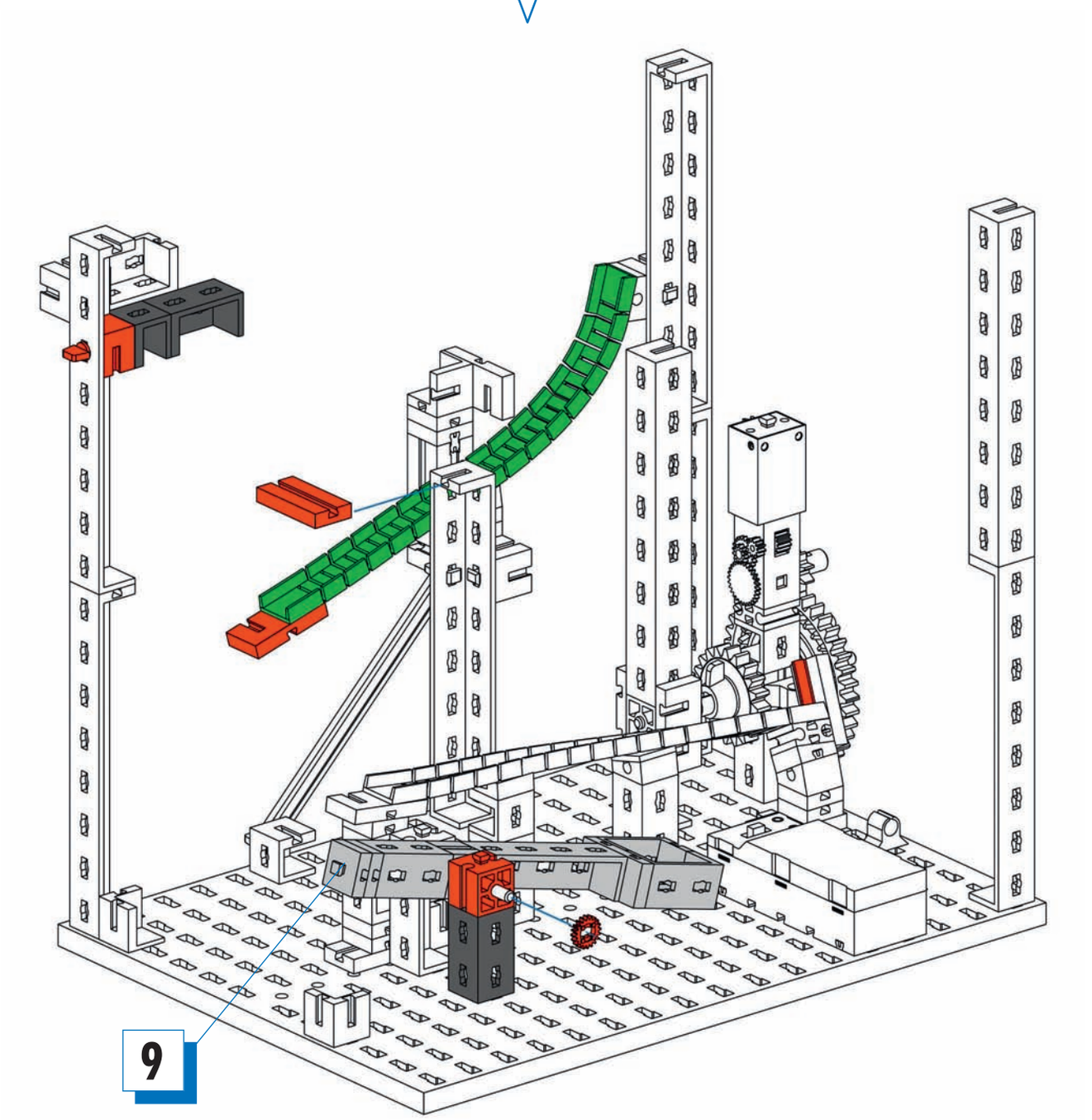
9

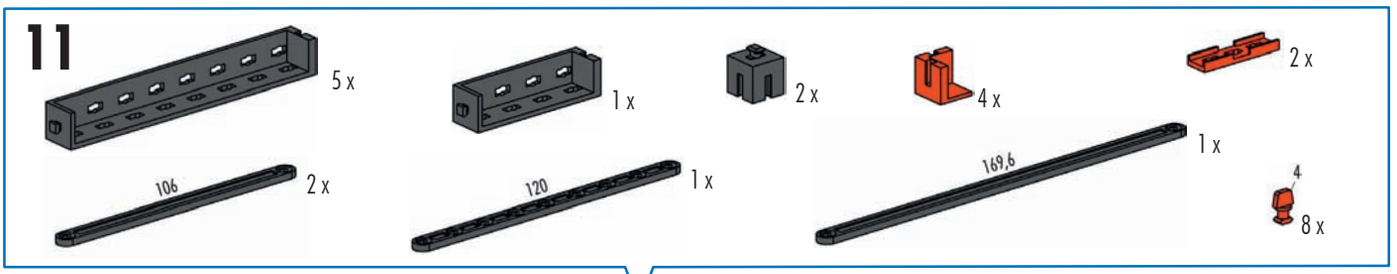
11
5 x
1 x
2 x
4 x
2 x
106
2 x
120
1 x
169,6
1 x
4
8 x

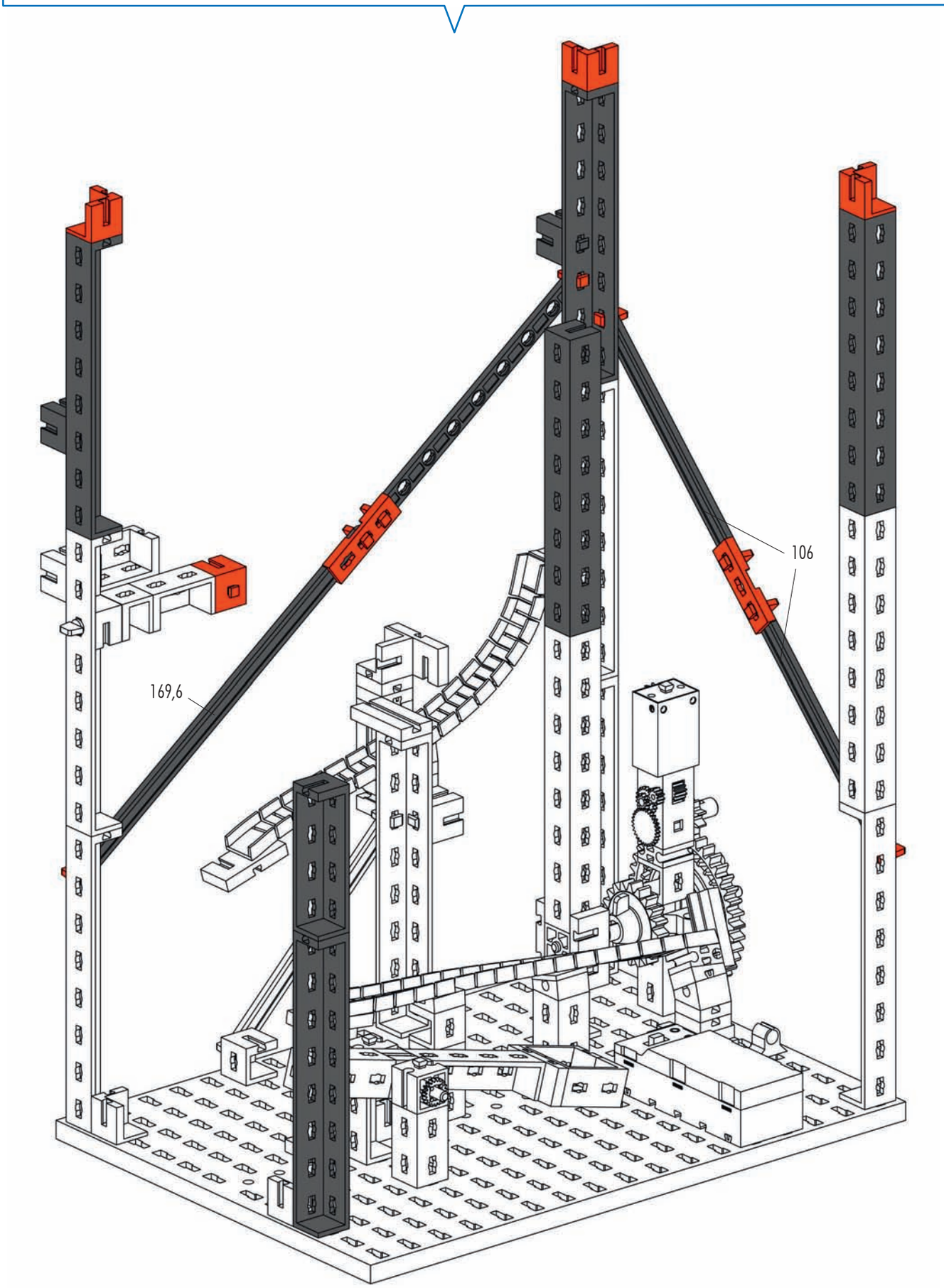
106
169,6

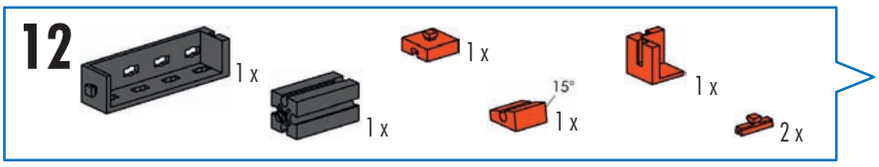
12
1 x
1 x
1 x
15°
1 x
1 x
2 x

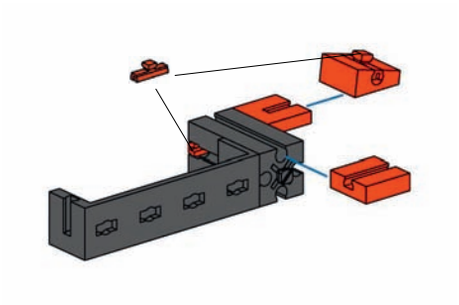

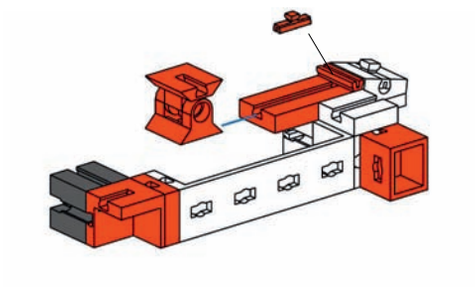

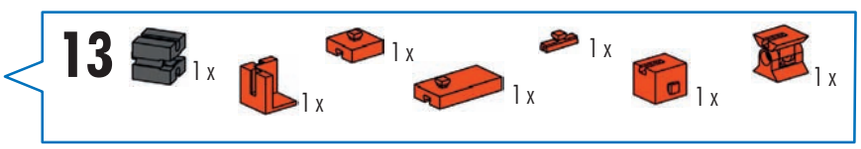
13
1 x
1 x
1 x
1 x
1 x
1 x
1 x

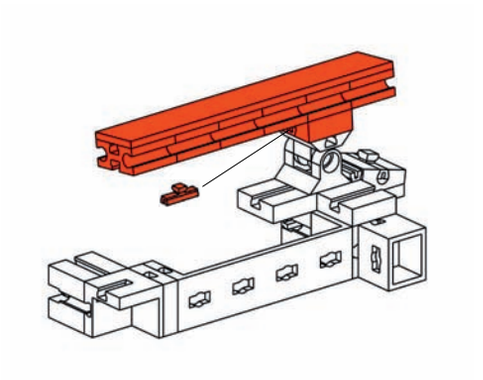

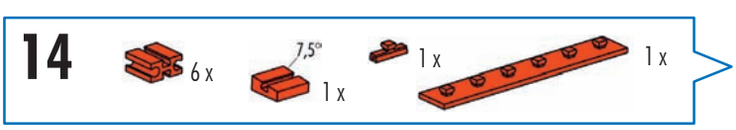
14
6 x
7,5°
1 x
1 x
1 x

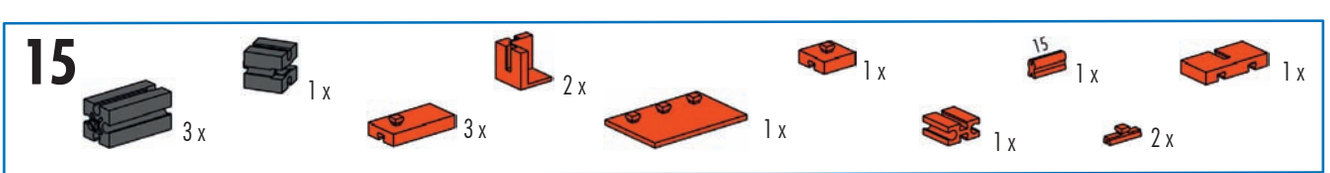
15
3 x
1 x
3 x
2 x
1 x
1 x
15
1 x
1 x
2 x

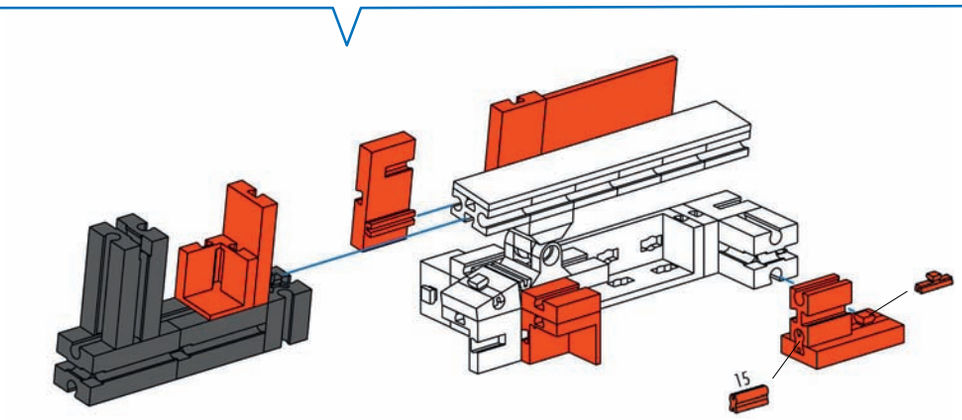
15

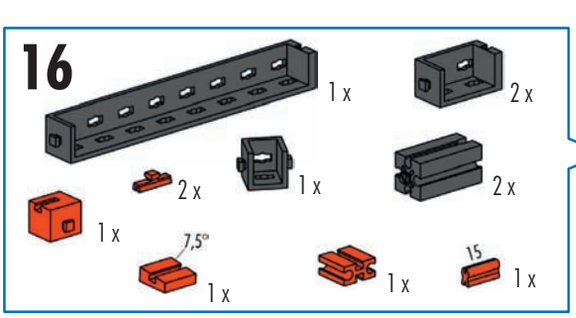
16
1 x
2 x
2 x
1 x
2 x
1 x
7,5°
1 x
1 x
15
1 x

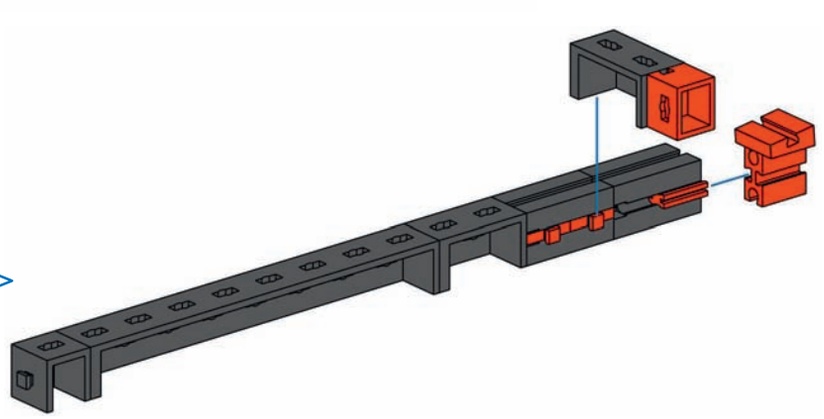

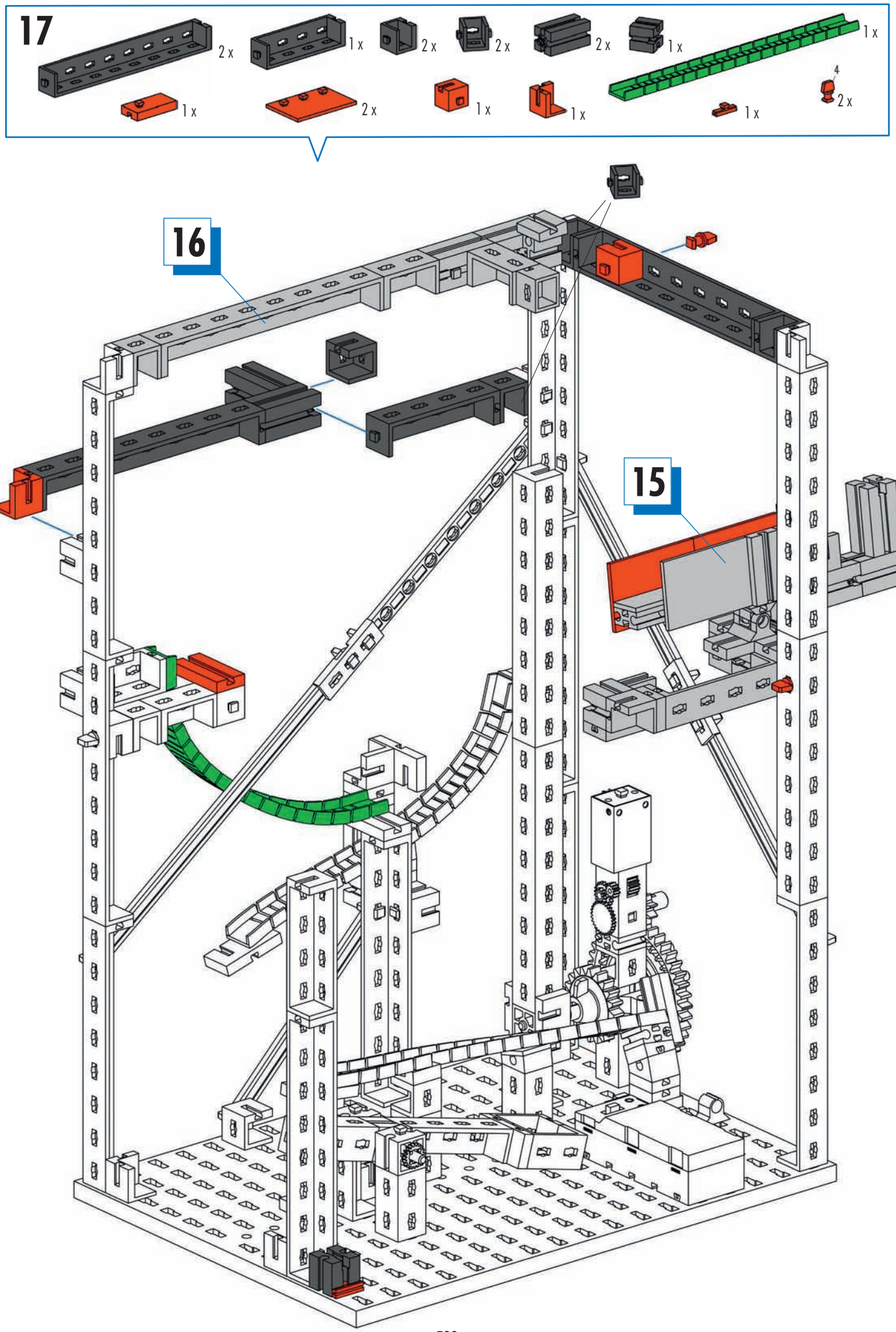

589

18

1 x 1 x 2 x 1 x 1 x

60 1 x 2 x 1 x 1 x

60 mm

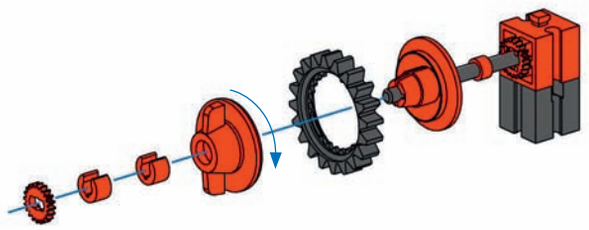

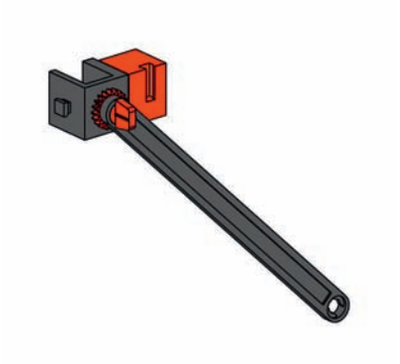

19

106 1 x 1 x 1 x 1 x 6 1 x

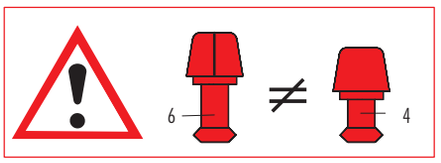

20

2 x 7,5° 1 x 1 x 1 x

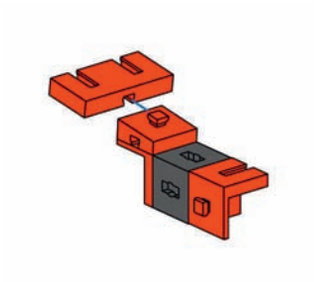

21

3 x 170 x

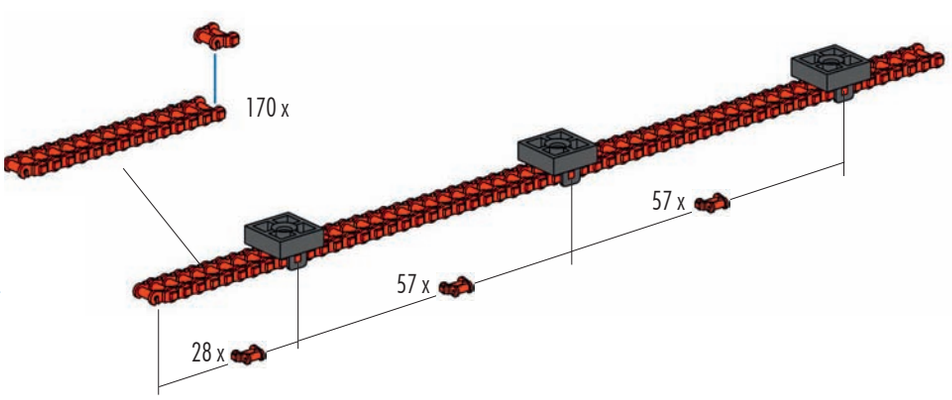

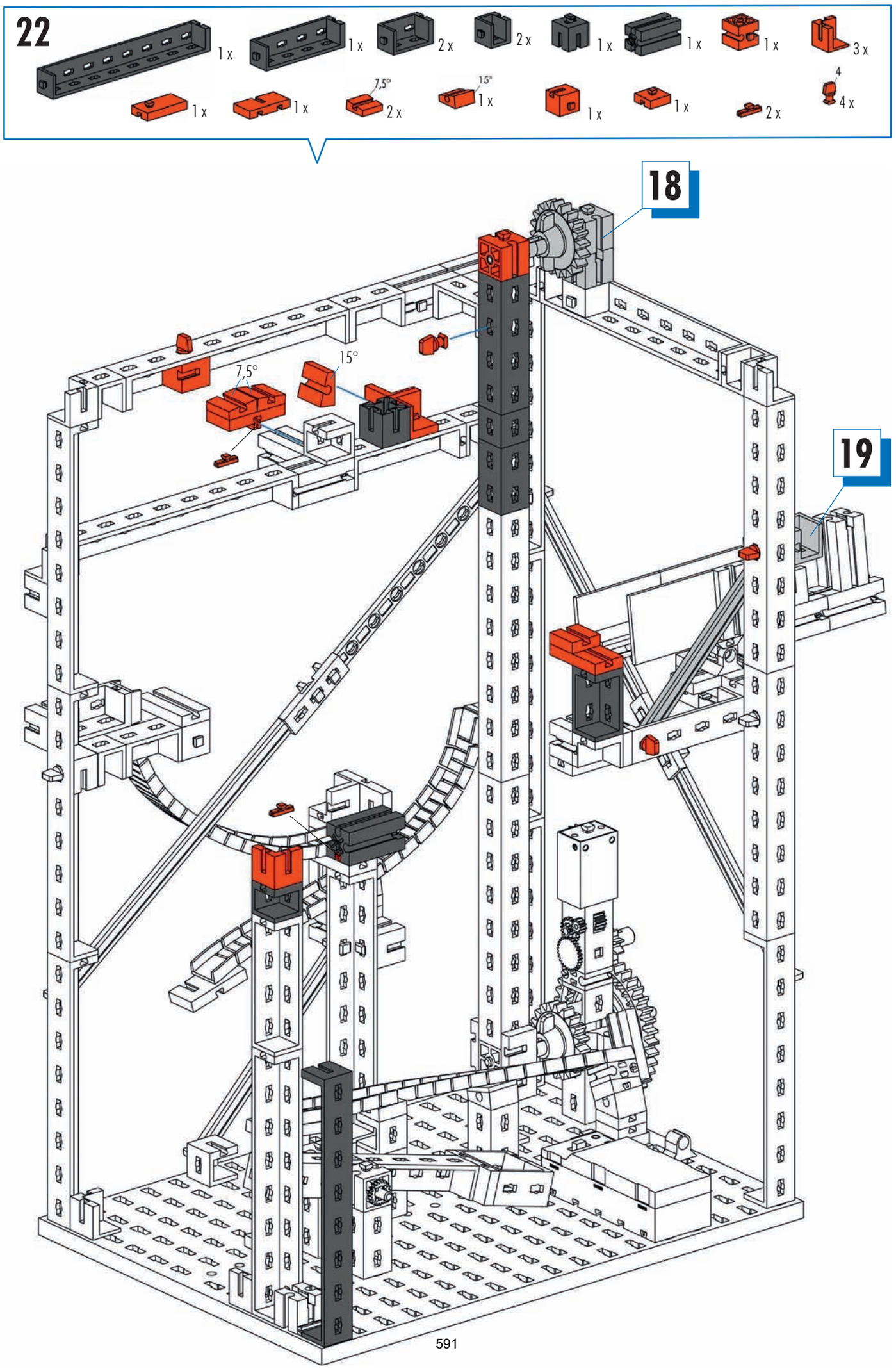
22
1 x
1 x
2 x
2 x
1 x
1 x
1 x
3 x
1 x
1 x
7,5°
2 x
15°
1 x
1 x
1 x
4
4 x
18
19
7,5°
15°
591

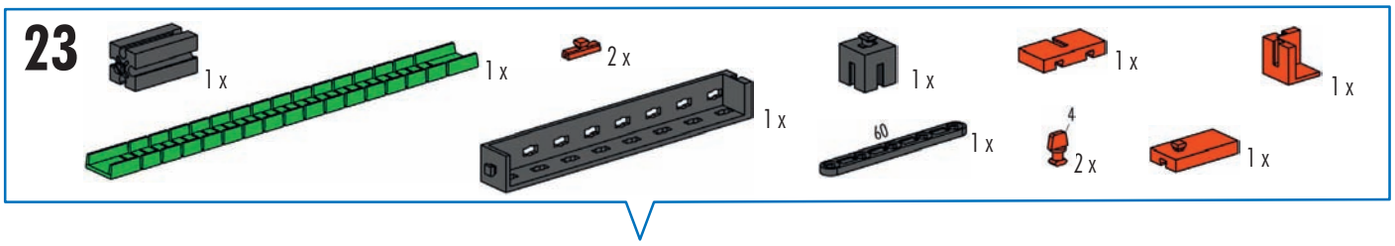
23
1 x
1 x
2 x
1 x
1 x
1 x
1 x
60
1 x
4
2 x
1 x

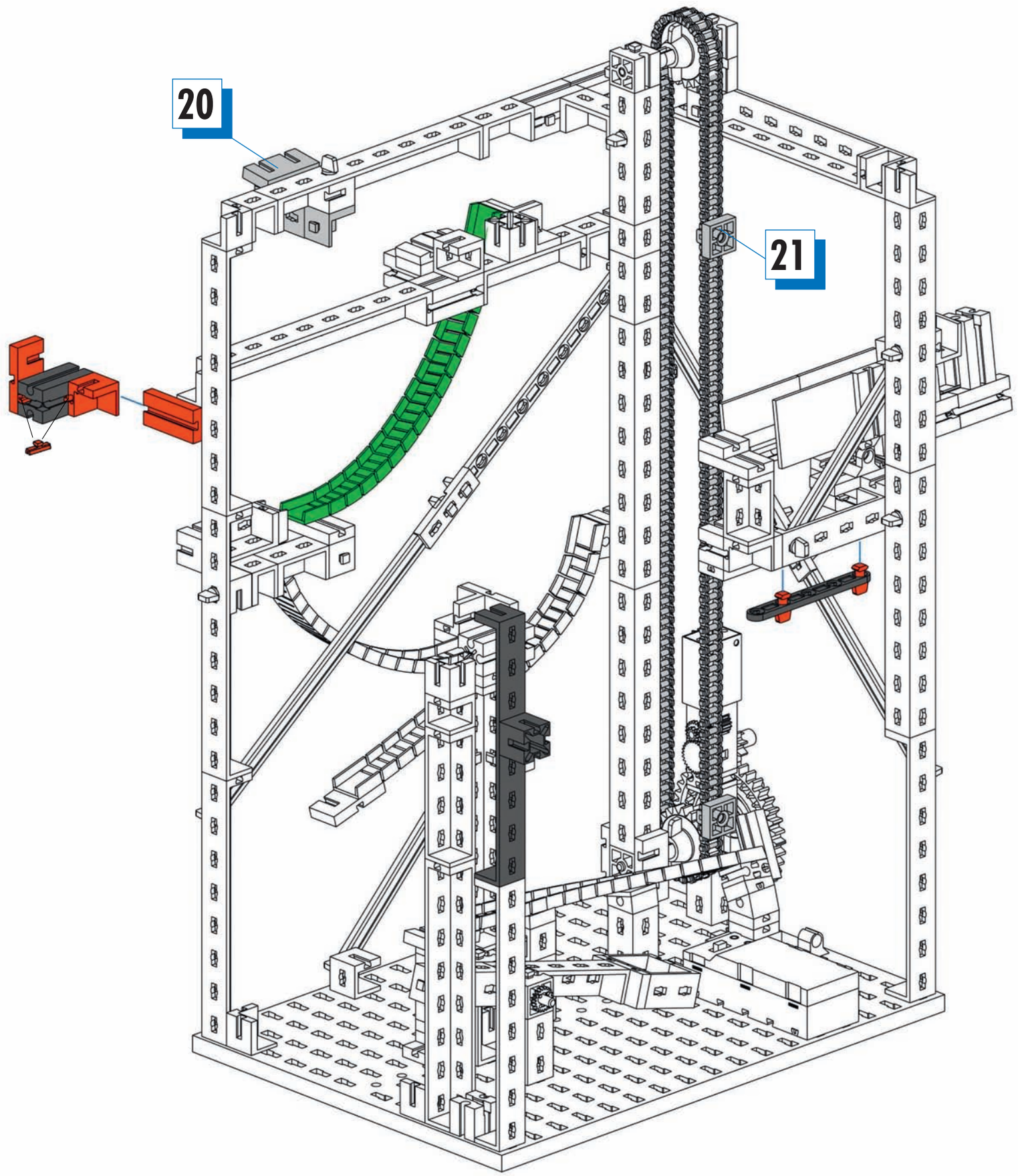
20
21

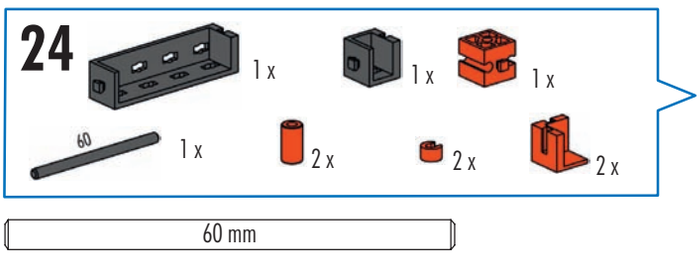
24
1 x
1 x
1 x
60
1 x
2 x
2 x
2 x
60 mm

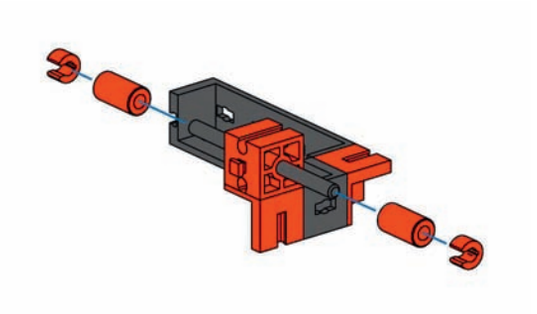

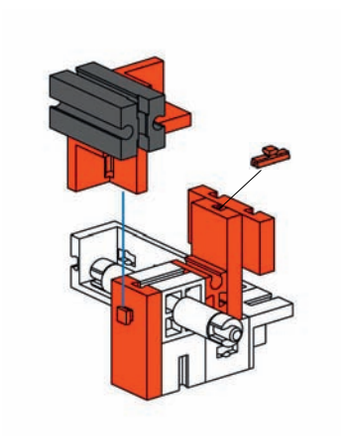

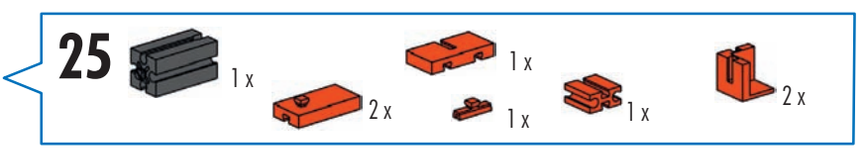
25
1 x
1 x
2 x
1 x
1 x
2 x

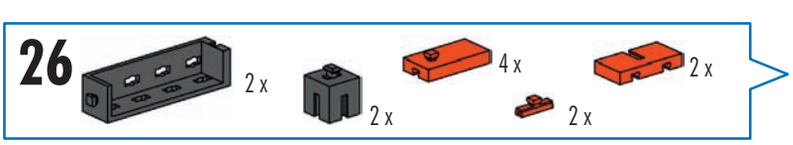
26
2 x
2 x
4 x
2 x
2 x

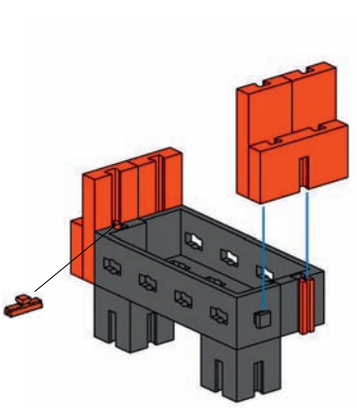

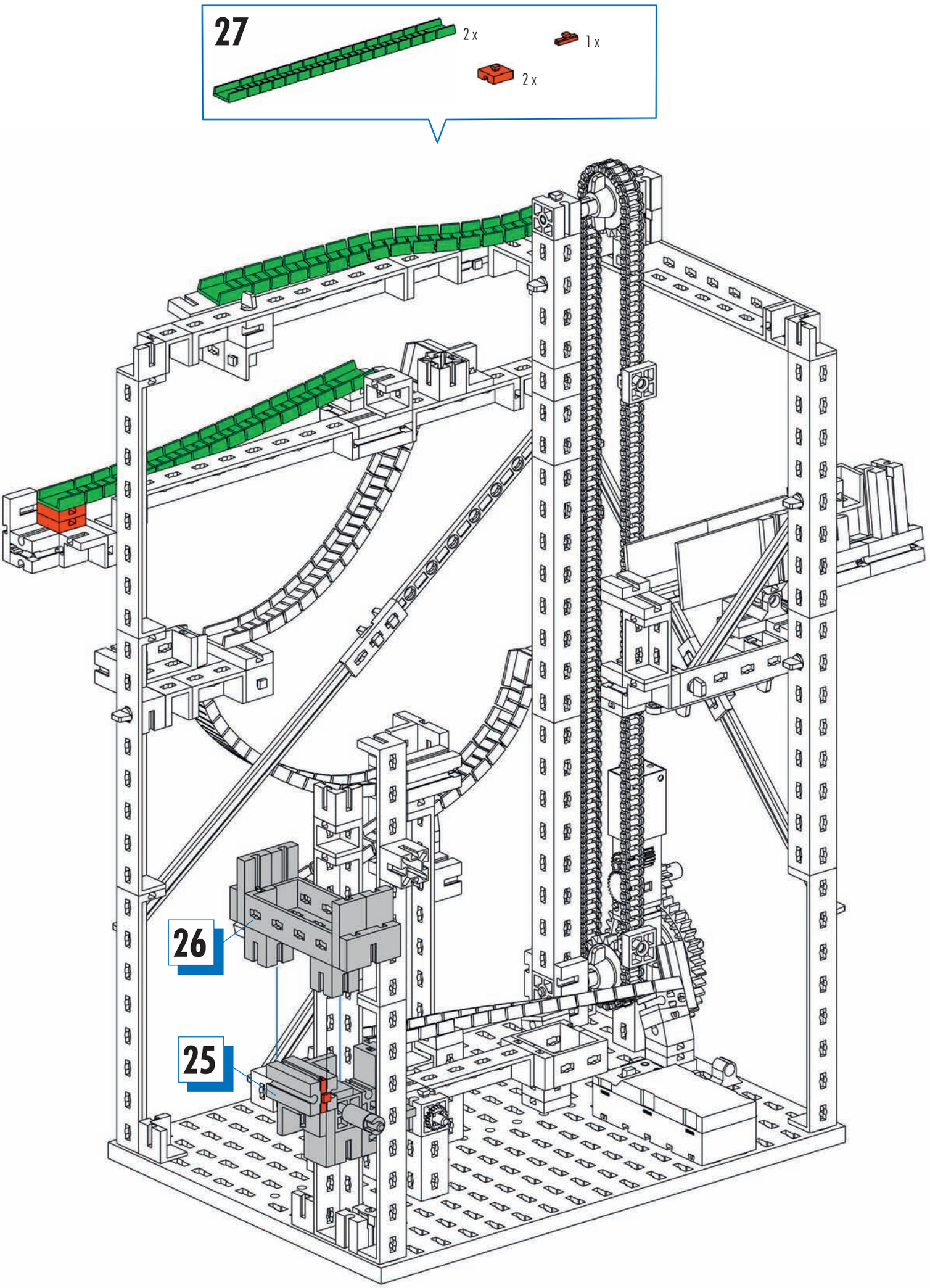
27
2 x
1 x
2 x
26
25

28

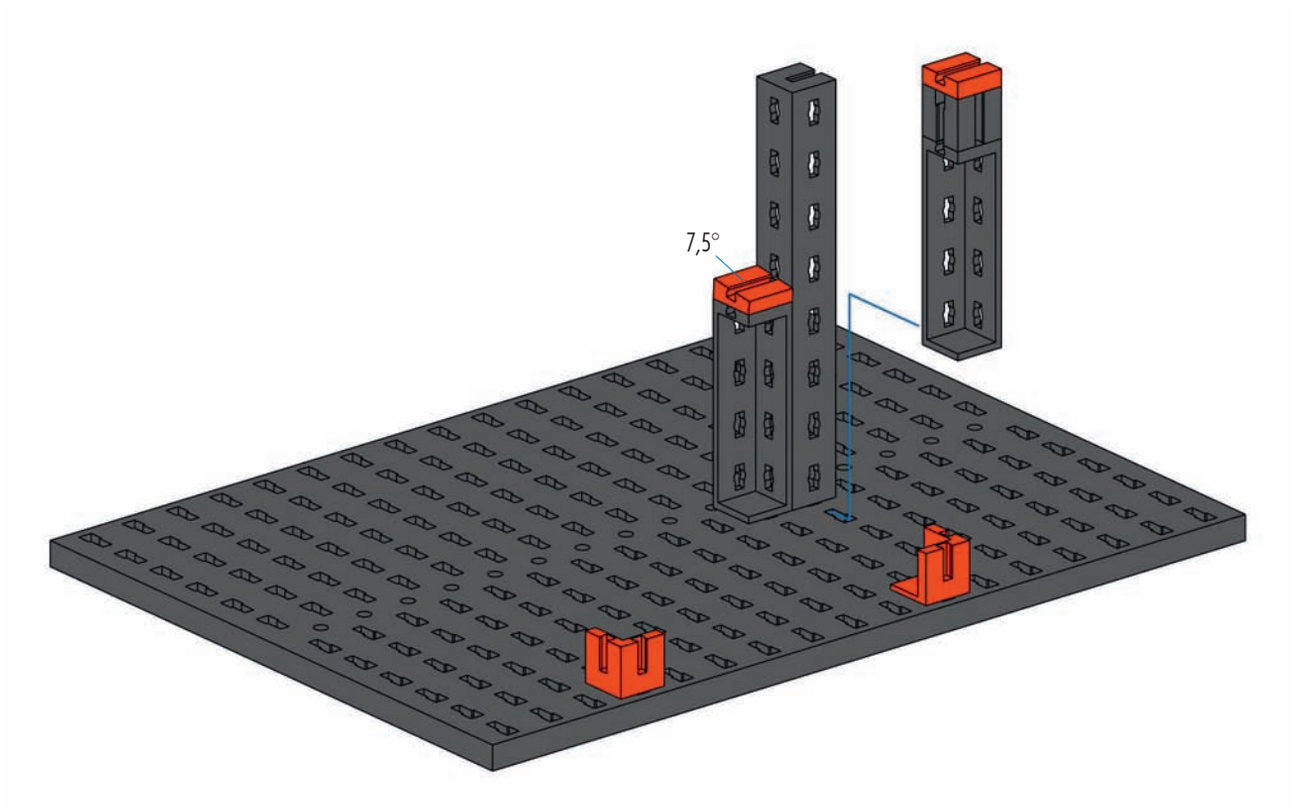

29

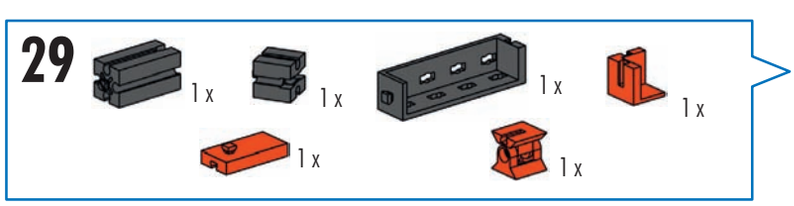

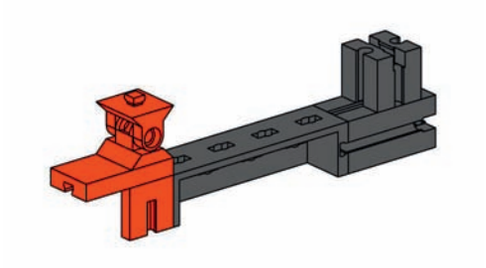

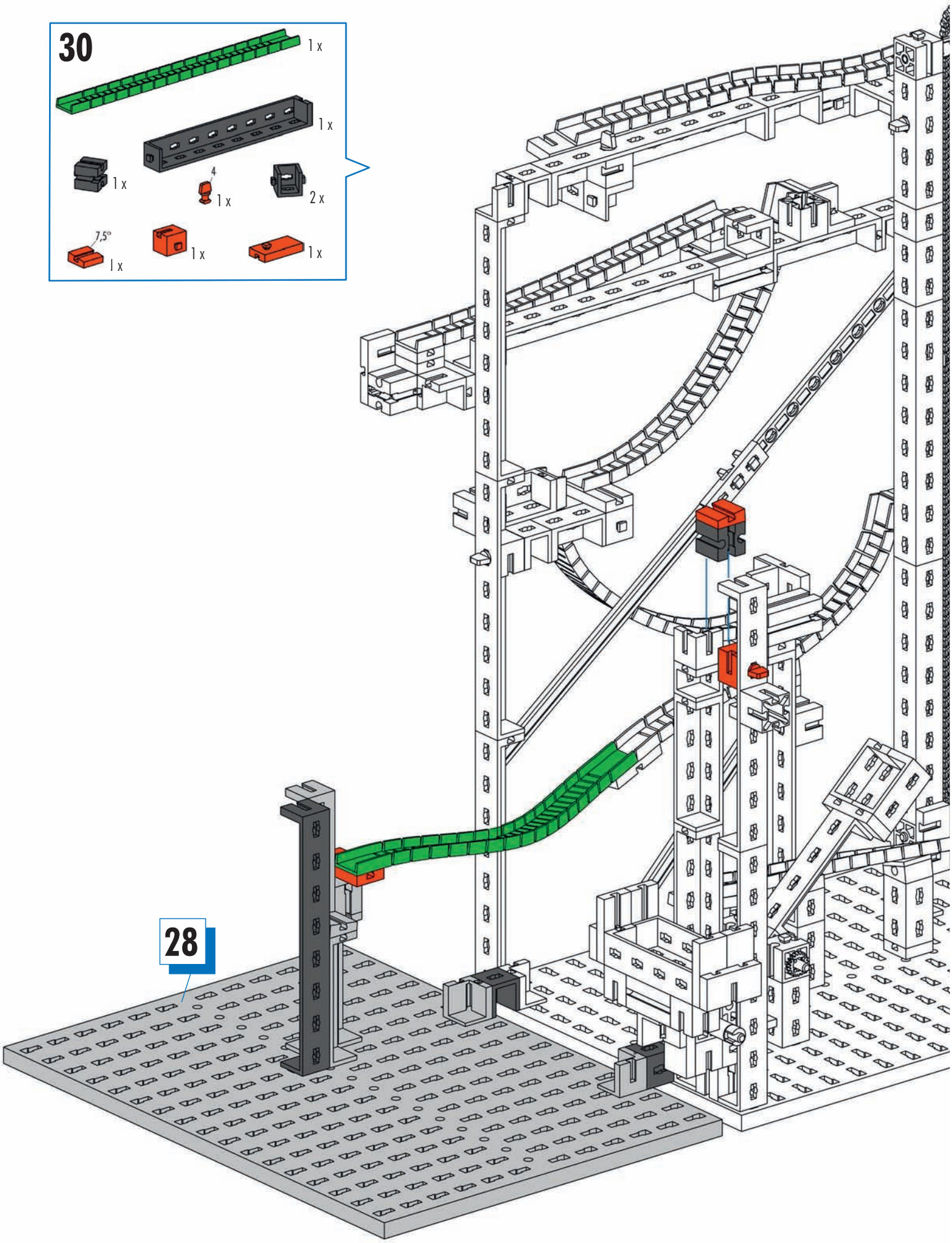
30
1 x
1 x
1 x
4
1 x
2 x
7,5°
1 x
1 x
1 x
28

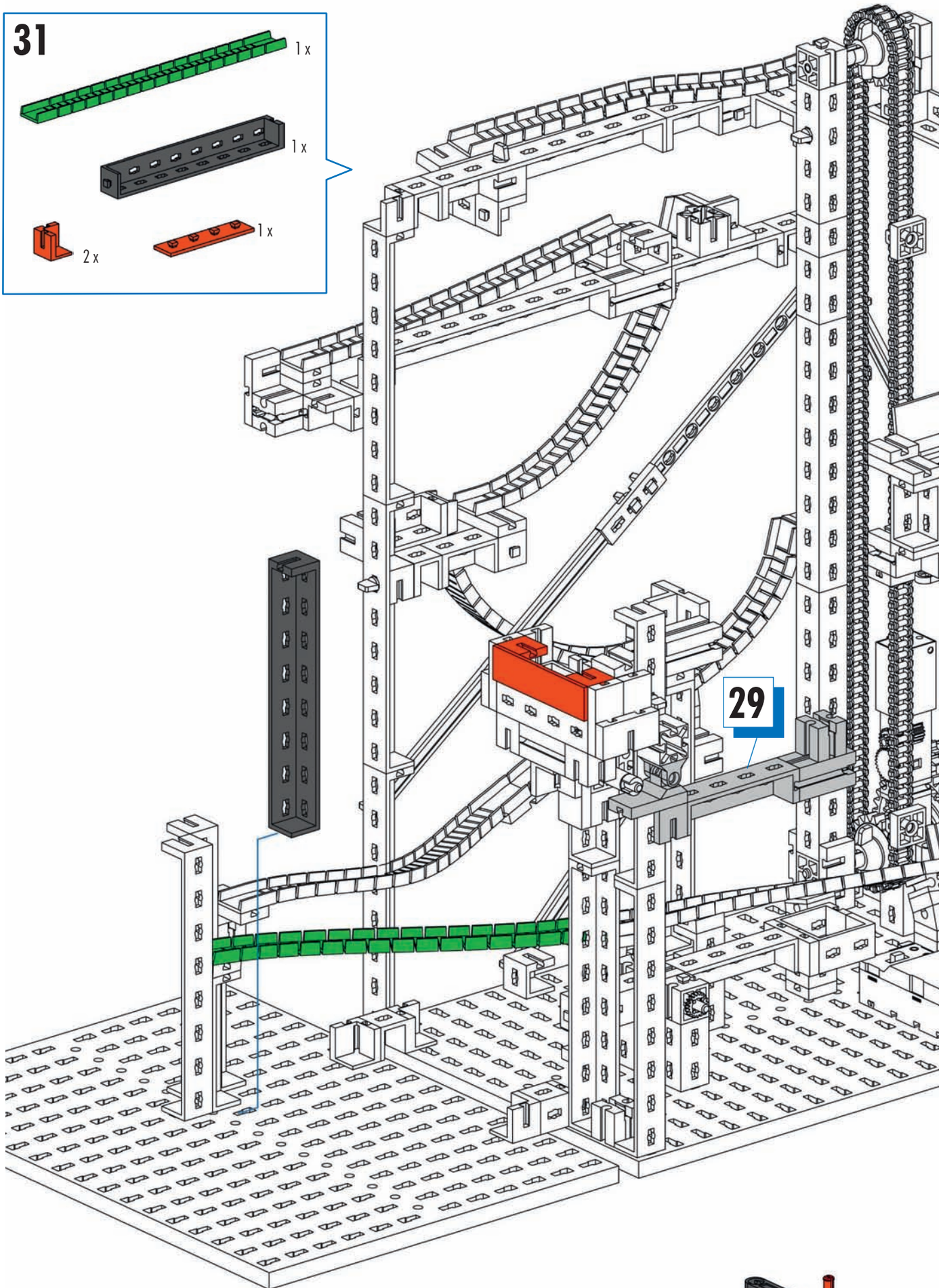
31
1 x
1 x
2 x
1 x
29

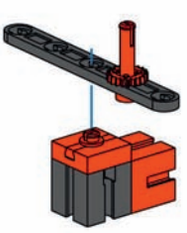

32
1 x
1 x
1 x
60
1 x
1 x
1 x
1 x

33

1 x 1 x 1 x 2 x 7,5° 1 x 1 x

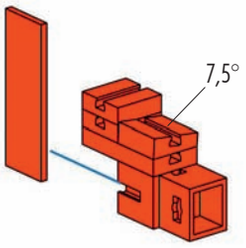

34

2 x 2 x 1 x 1 x 1 x 2 x

1 x 7,5° 1 x 4 1 x 1 x

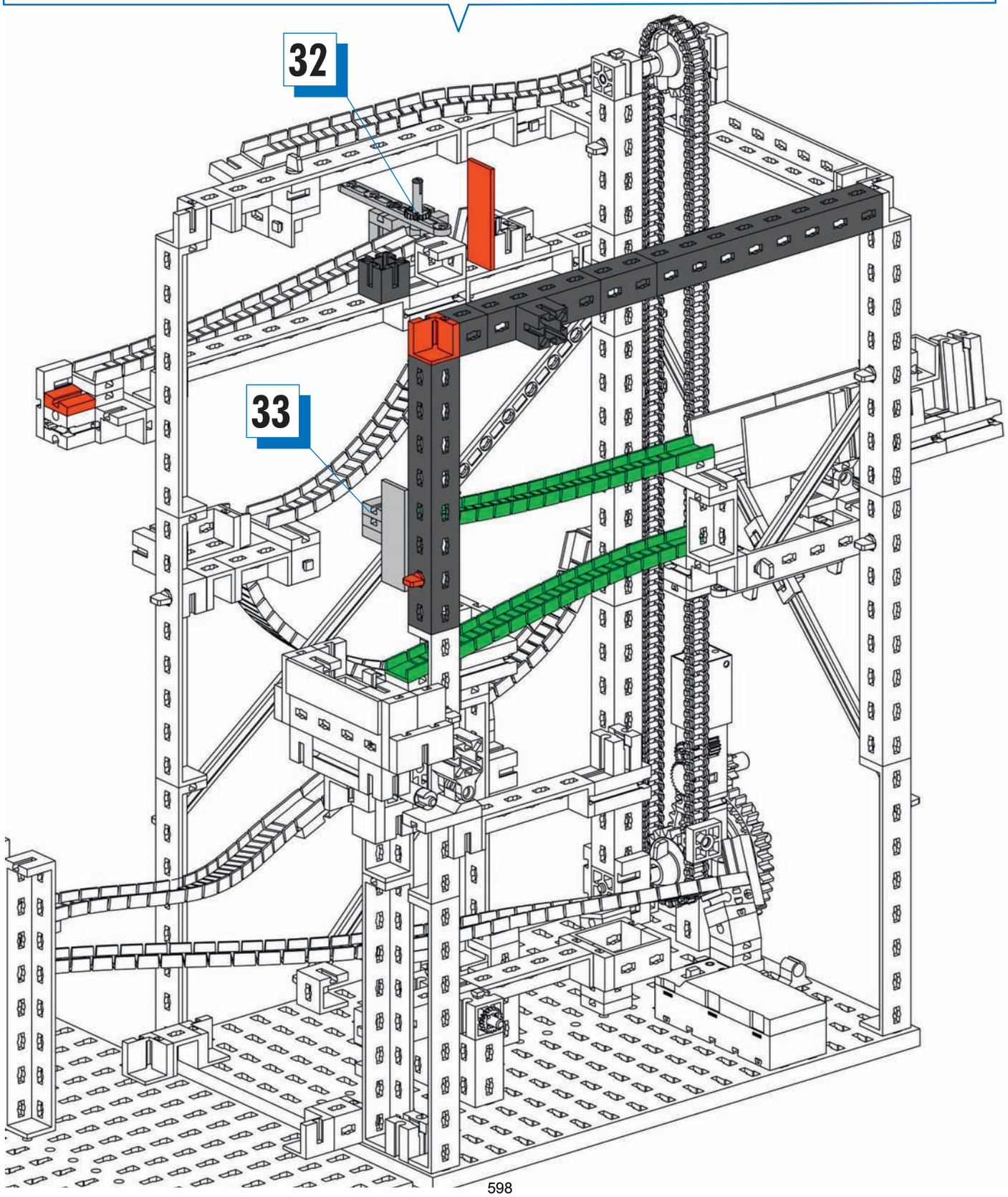

598

35

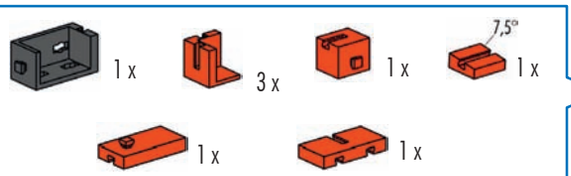
1 x
3 x
1 x
7,5°
1 x
1 x
1 x

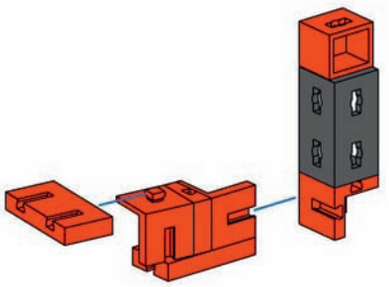

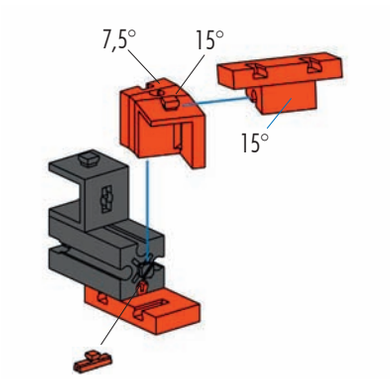
7,5°
15°
15°

36

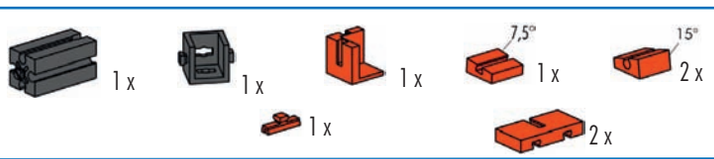
1 x
1 x
1 x
7,5°
1 x
15°
2 x
1 x
2 x

37

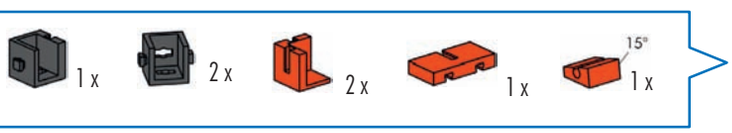
1 x
2 x
2 x
1 x
15°
1 x

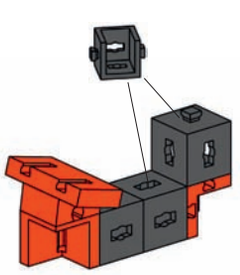

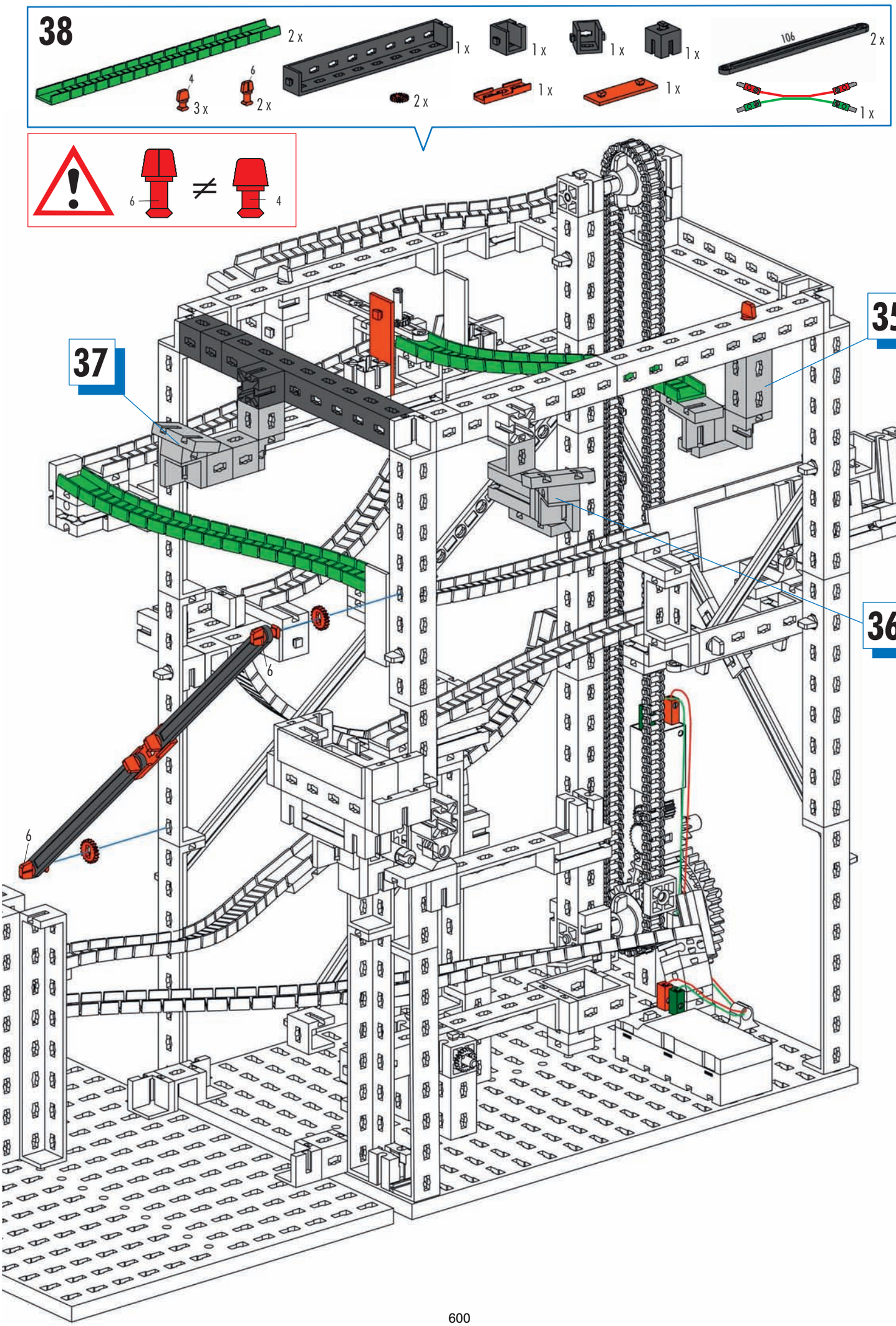
38
2 x
1 x
1 x
1 x
1 x
106
2 x
4
3 x
6
2 x
2 x
1 x
1 x
1 x
6
4
35
37
36
6
6

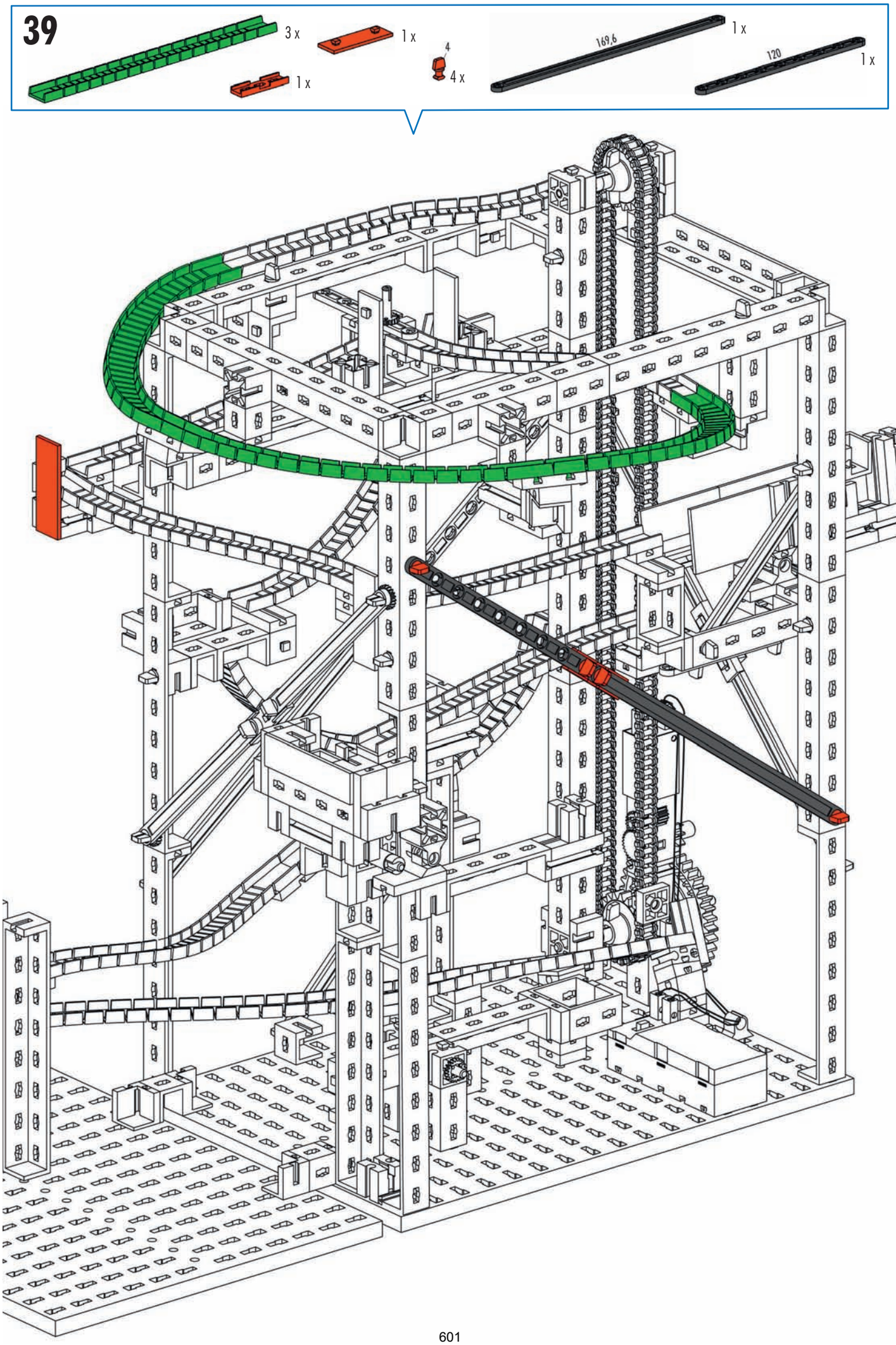

601

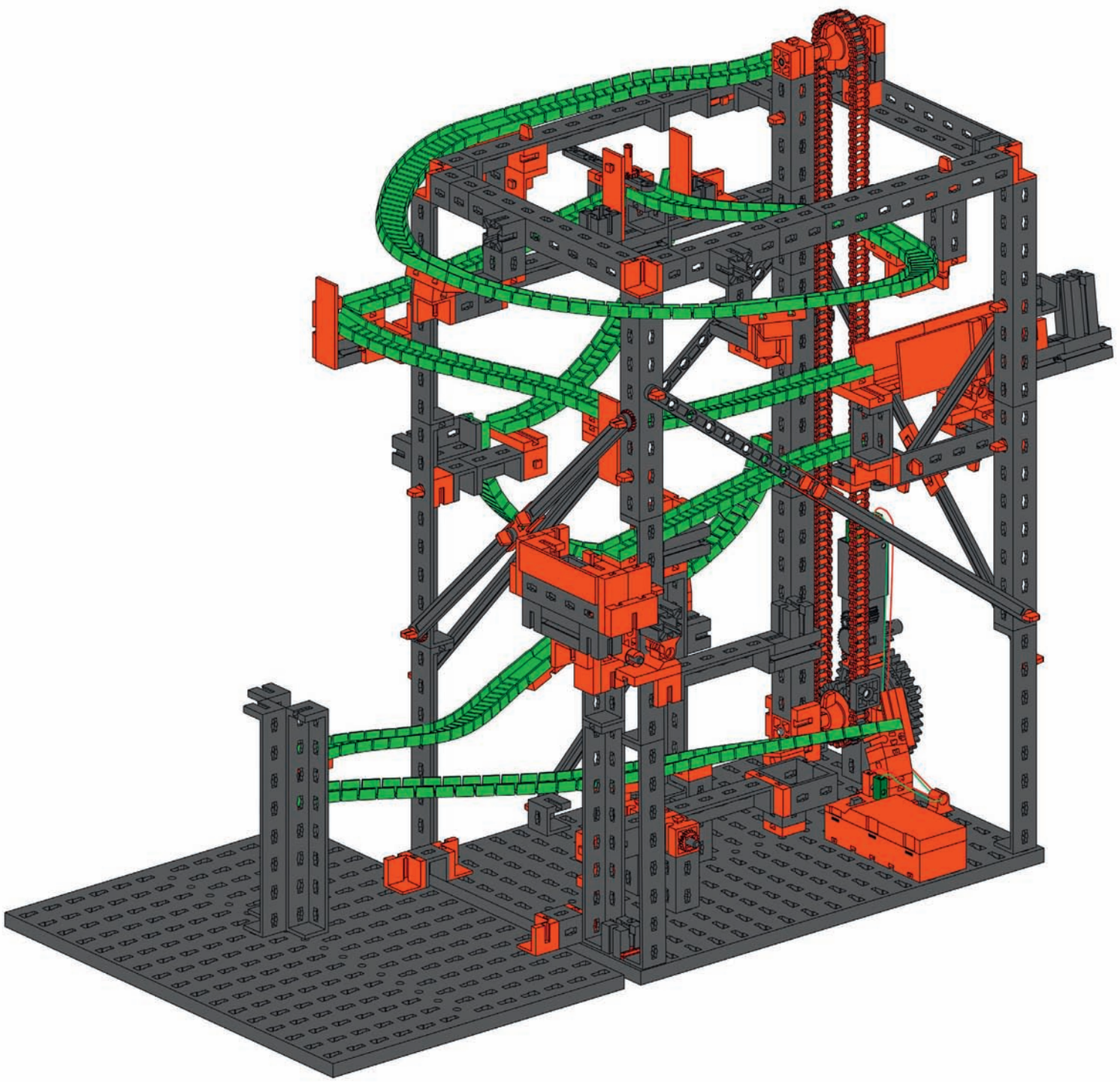

602

Parcours 3
Obstacle course 3
Parcours 3

Parcours 3
Pista de recorrido 3
Circuito 3

Circuito 3
Маршрут 3
滚珠弯道 3

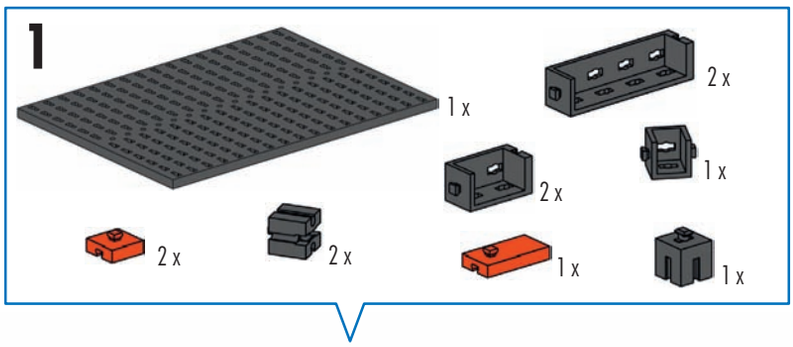

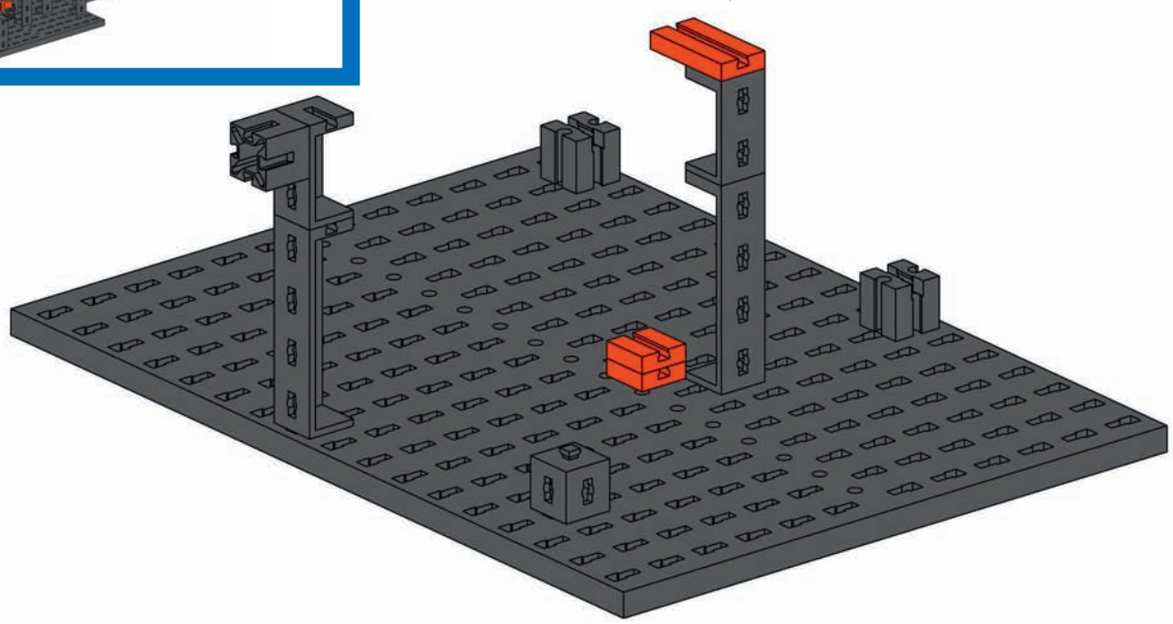

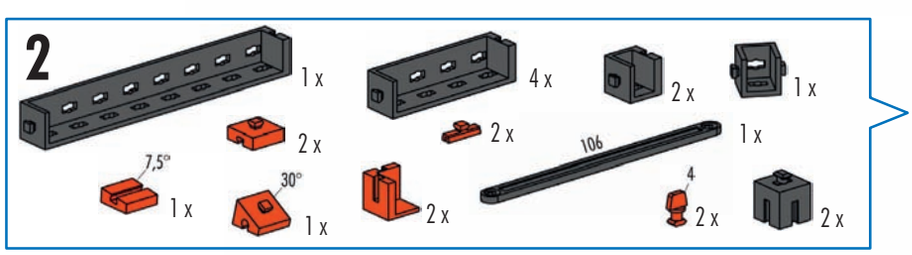

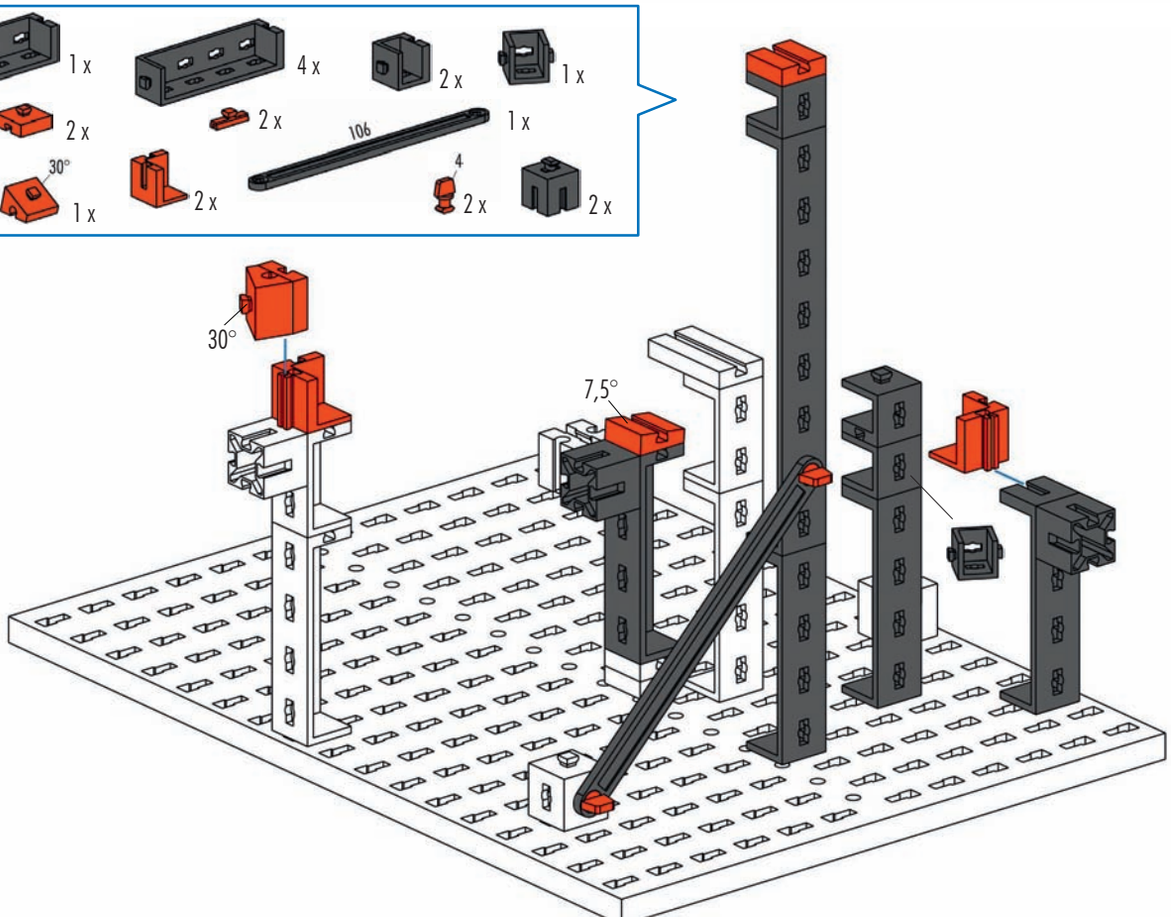

603

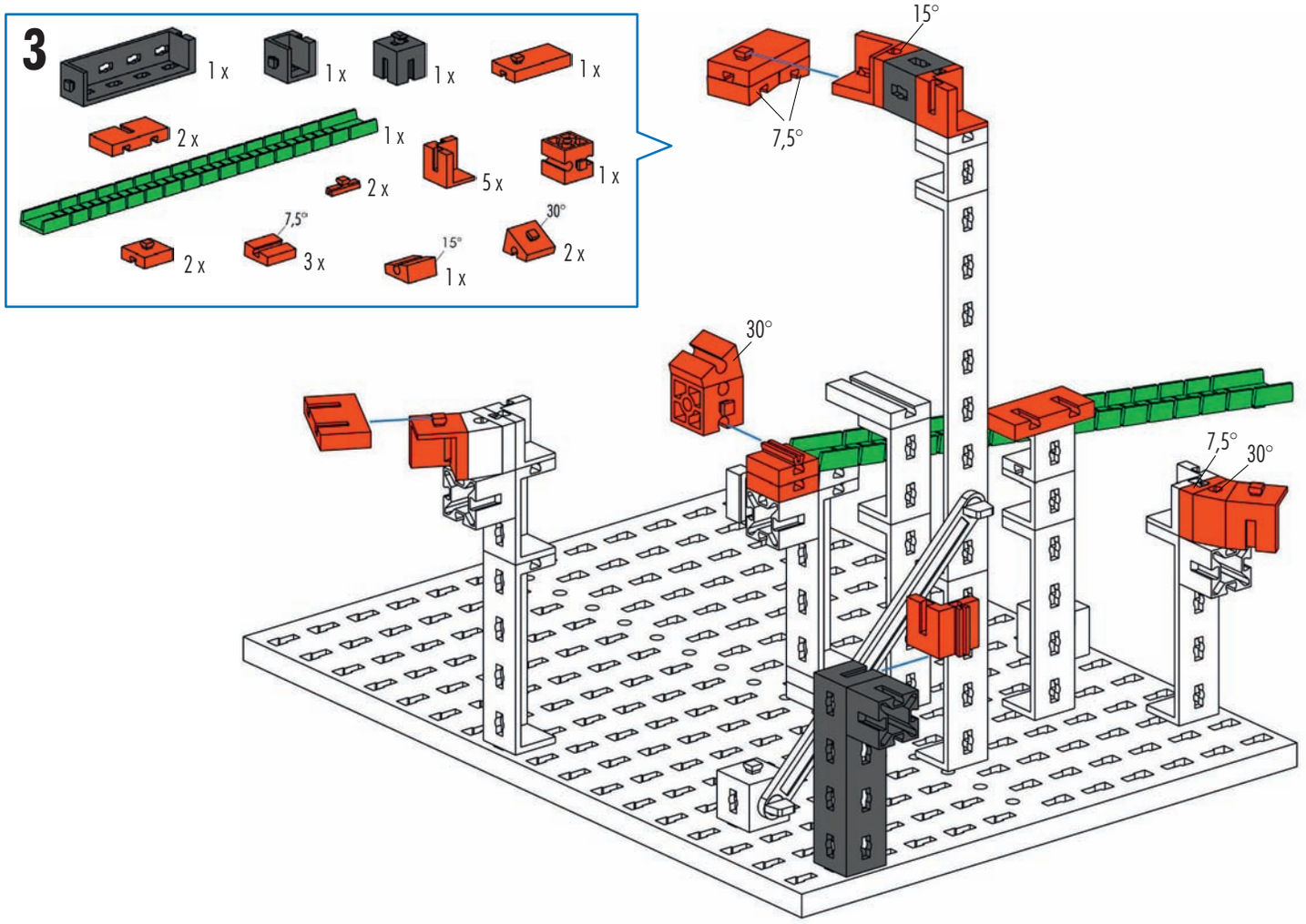
3
1 x
1 x
1 x
1 x
2 x
1 x
2 x
5 x
1 x
7,5°
2 x
3 x
15°
1 x
30°
2 x
15°
7,5°
30°
7,5°
30°

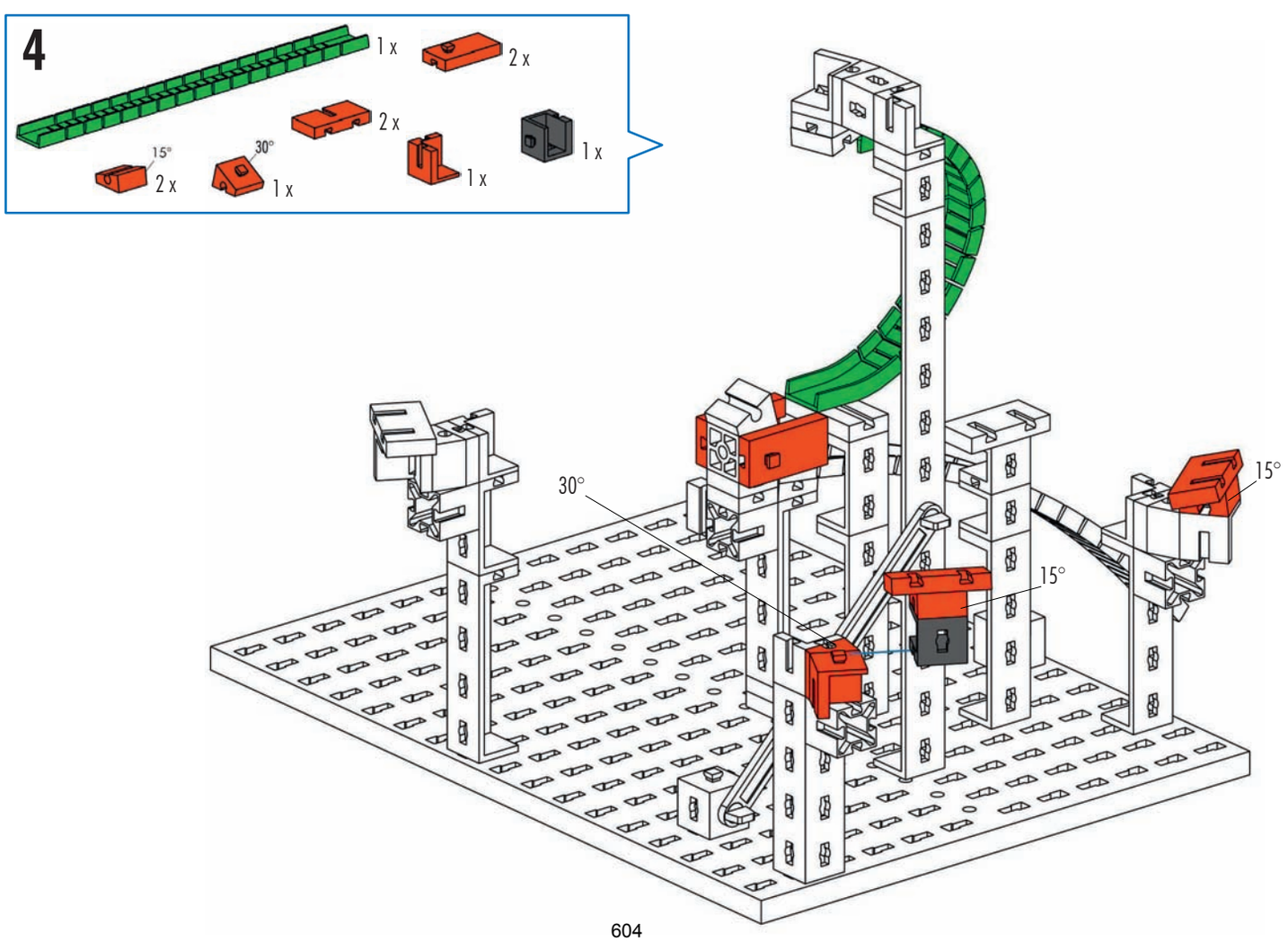
4
1 x
2 x
2 x
15°
2 x
30°
1 x
1 x
1 x
30°
15°
15°

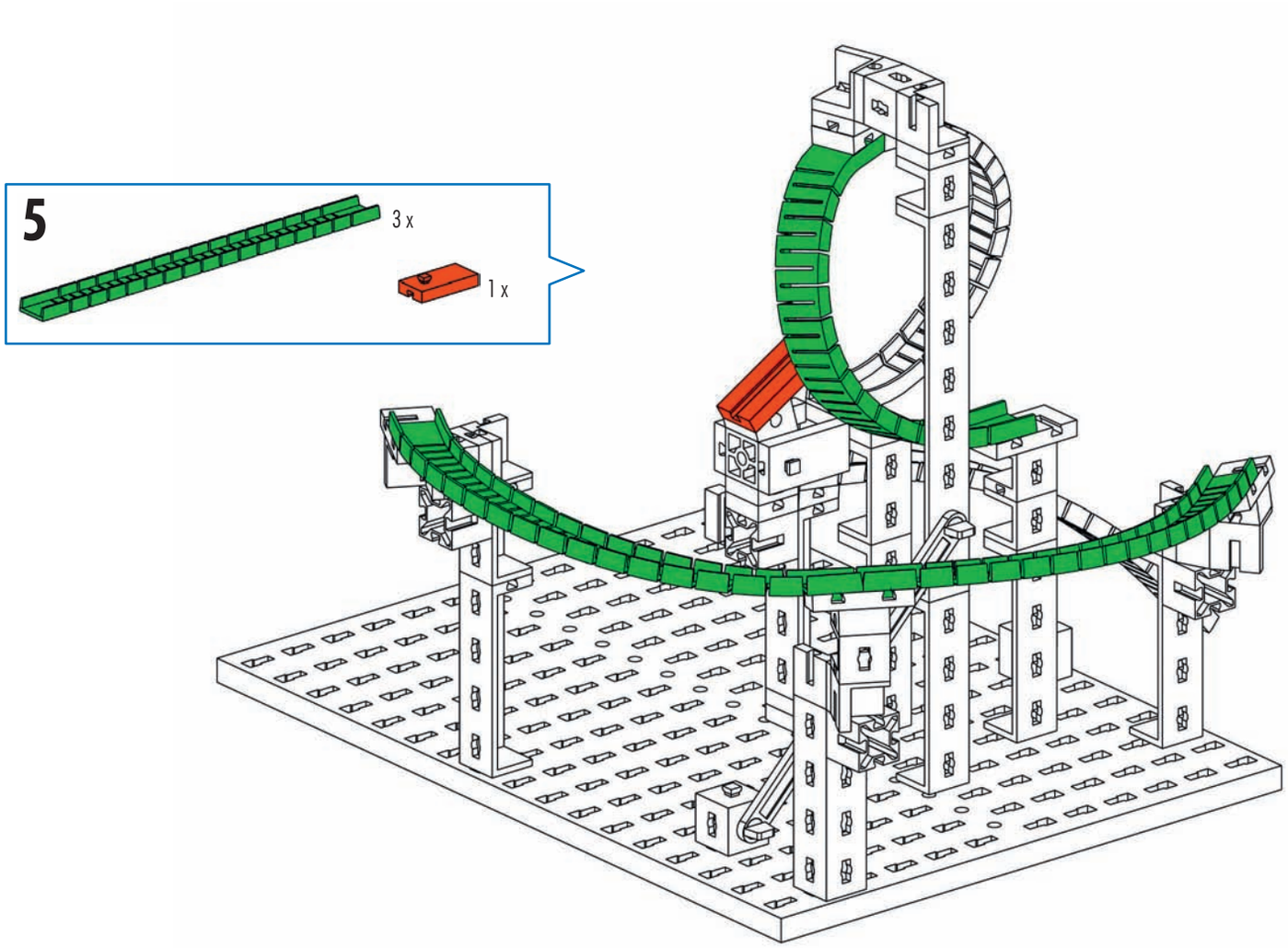

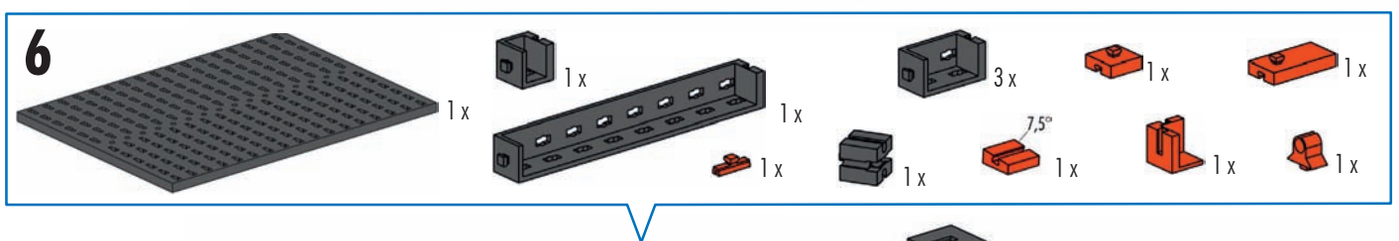

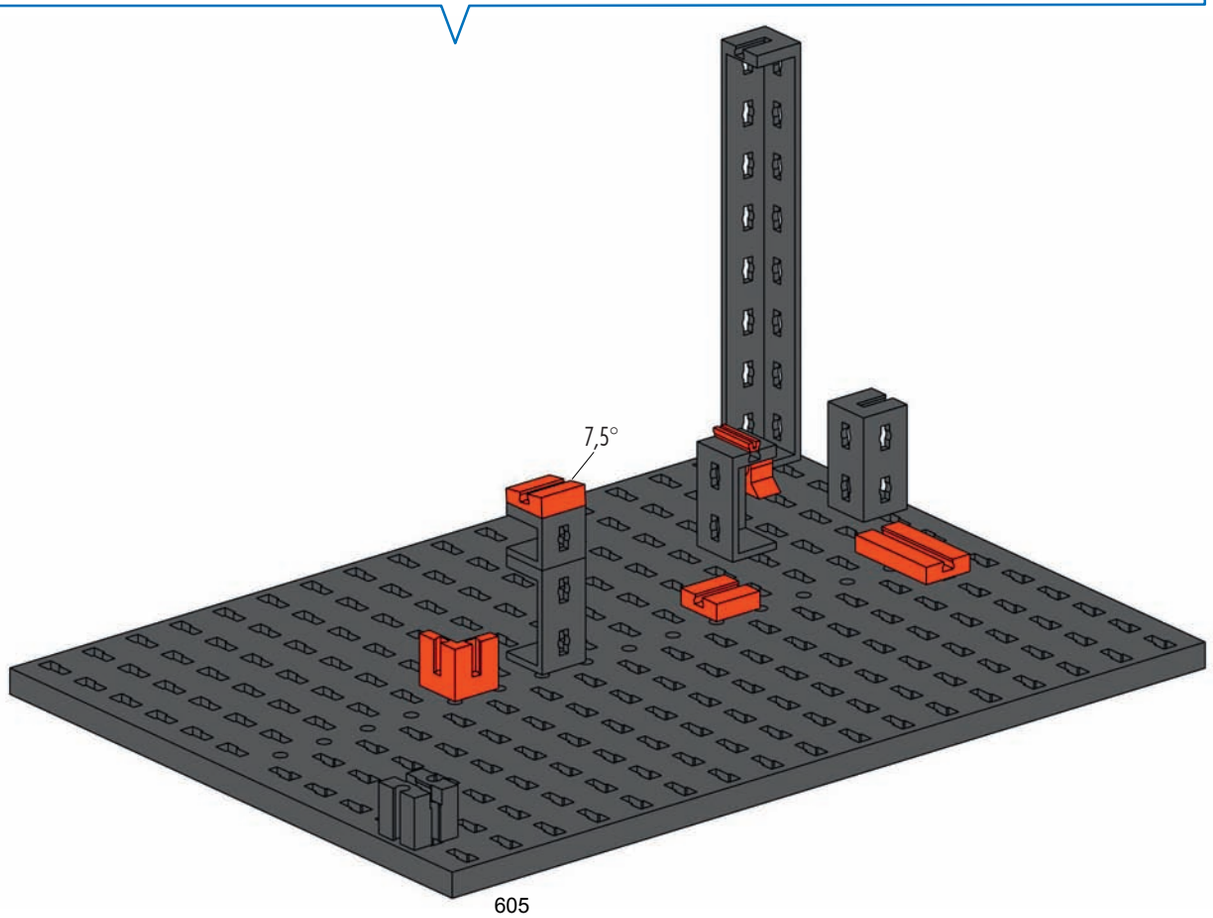

605

7

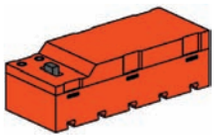
1 x
4 x

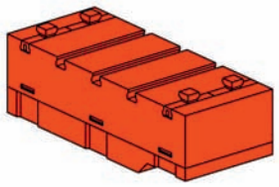

8

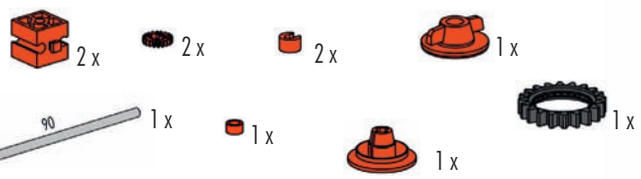
2 x
2 x
2 x
1 x
90
1 x
1 x
1 x
1 x

90 mm

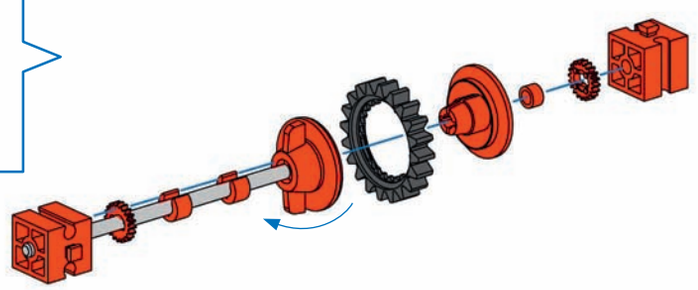

9

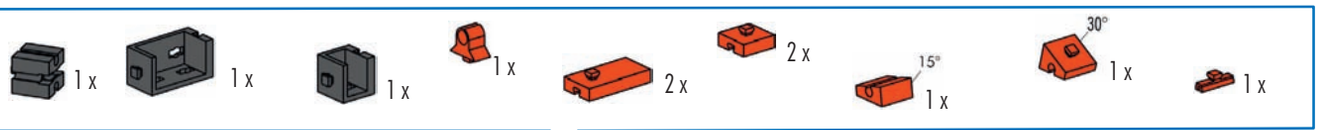
1 x
1 x
1 x
1 x
2 x
2 x
15°
1 x
30°
1 x
1 x

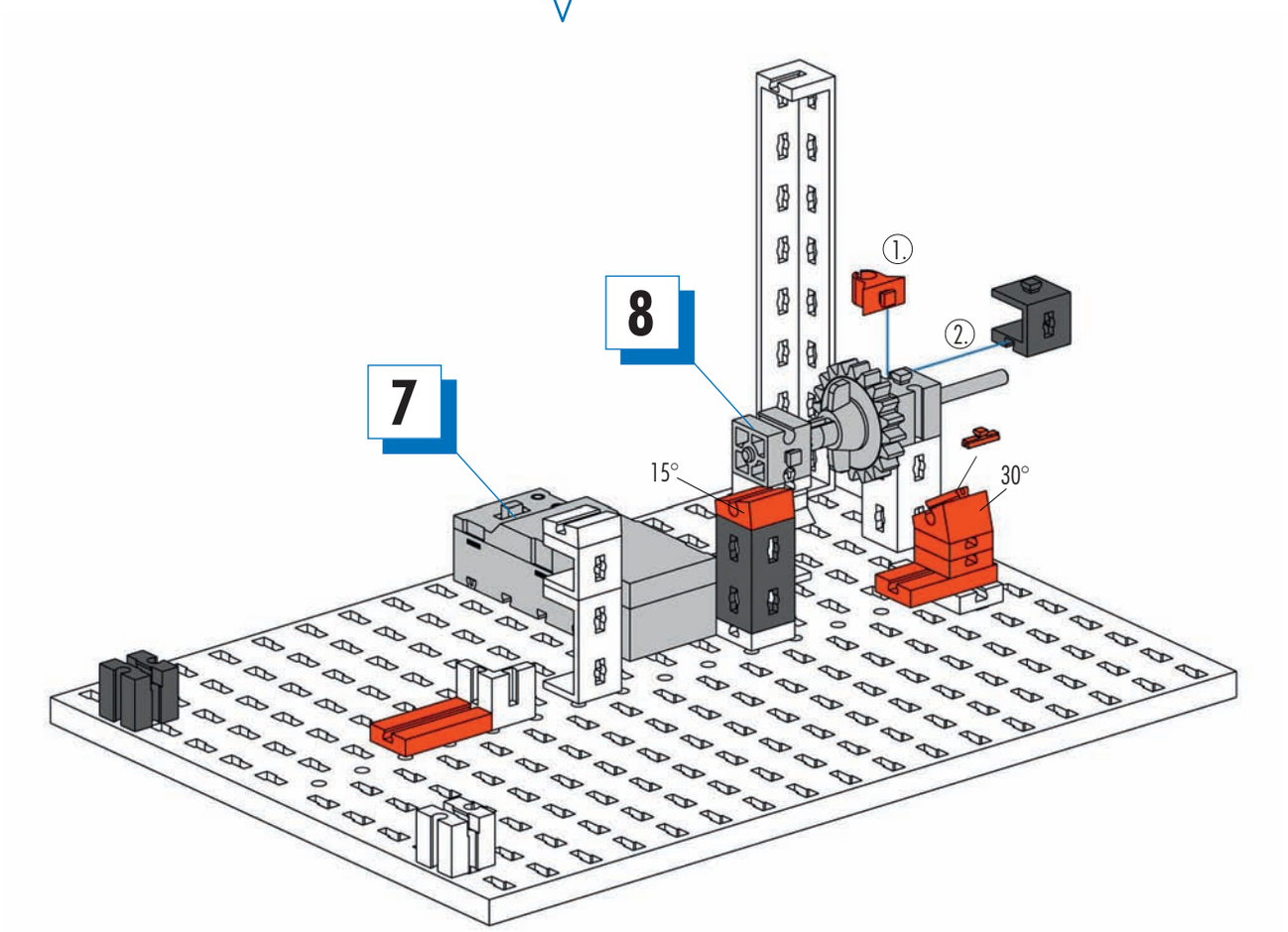
8
7
1.
2.
15°
30°

606

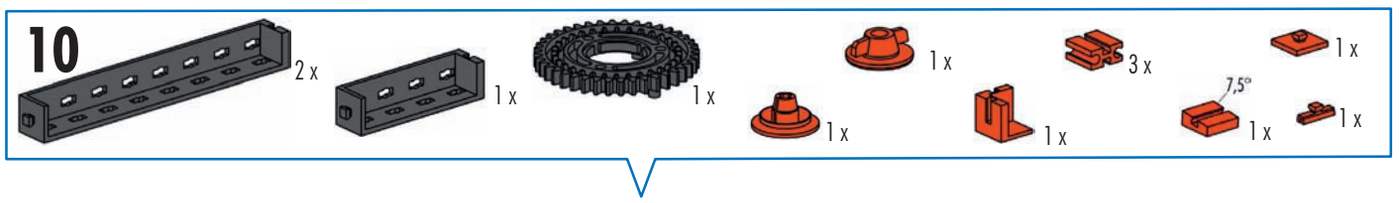
10
2 x
1 x
1 x
1 x
3 x
1 x
1 x
1 x
7,5°
1 x
1 x

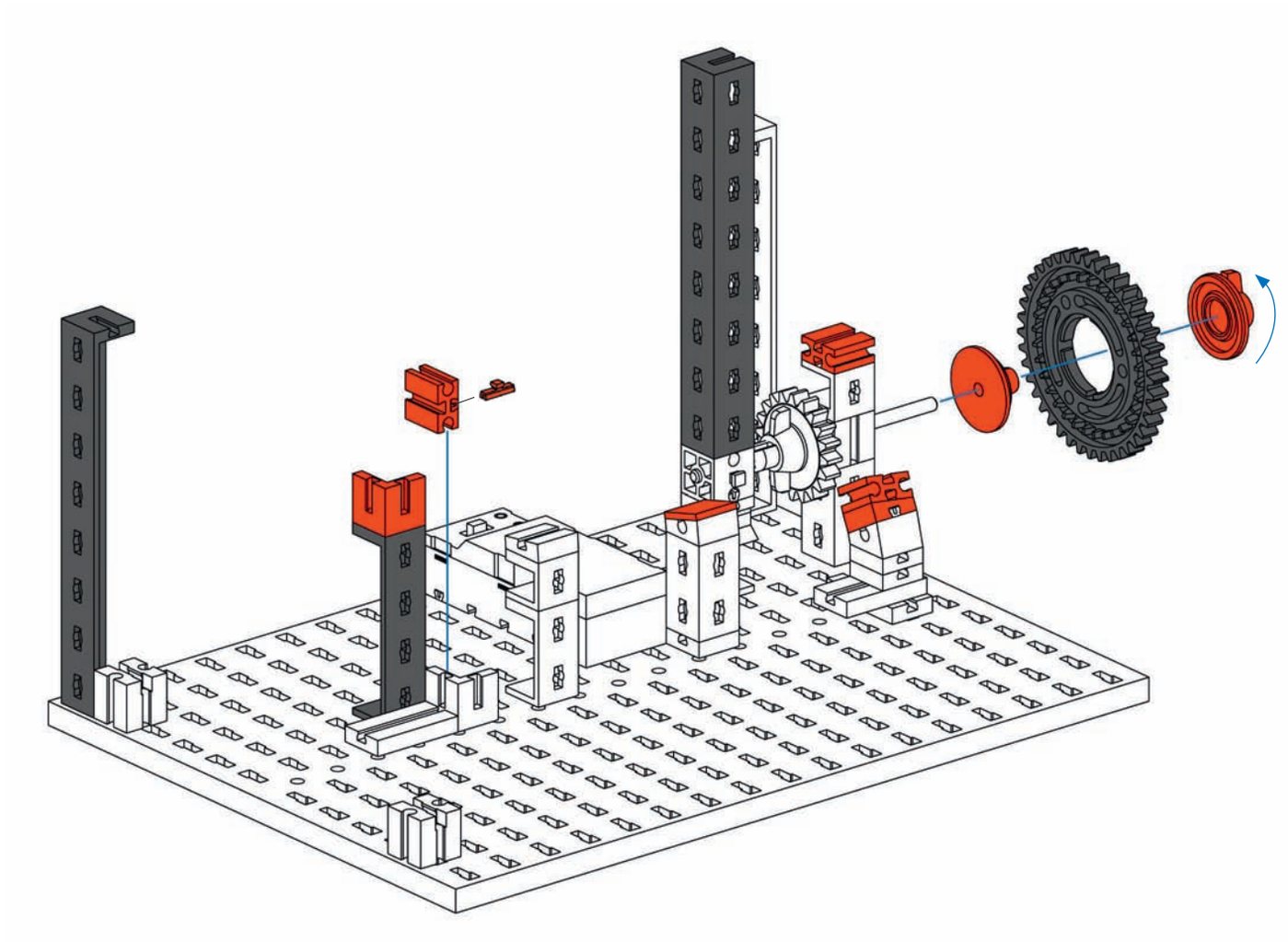

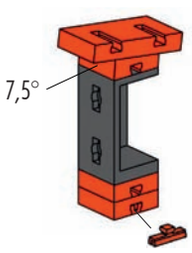
7,5°

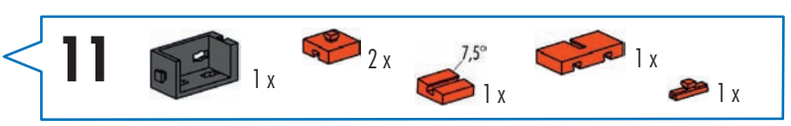
11
1 x
2 x
7,5°
1 x
1 x
1 x

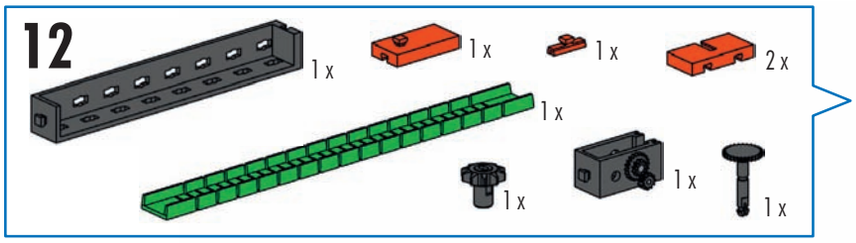
12
1 x
1 x
1 x
2 x
1 x
1 x
1 x
1 x

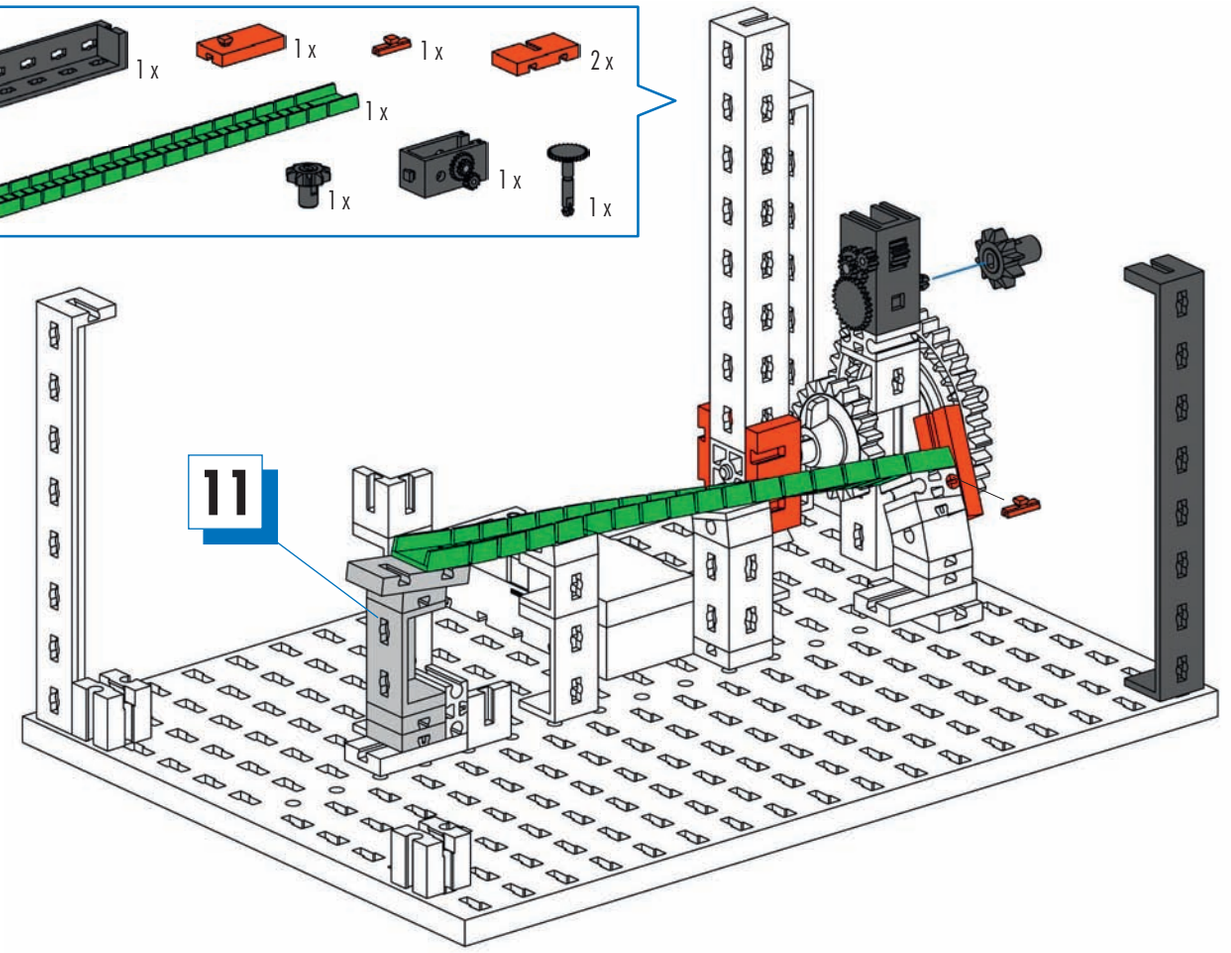
11

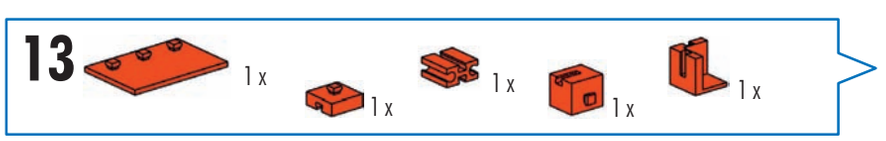
13
1 x
1 x
1 x
1 x
1 x

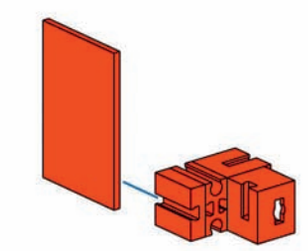

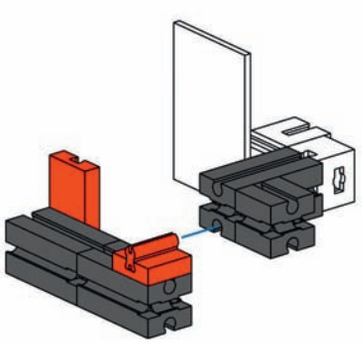

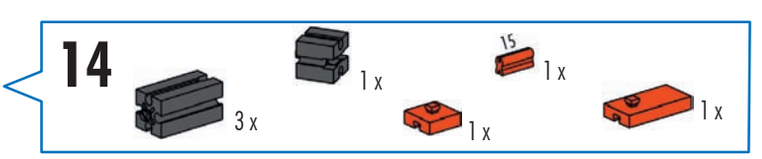
14
3 x
1 x
15
1 x
1 x
1 x

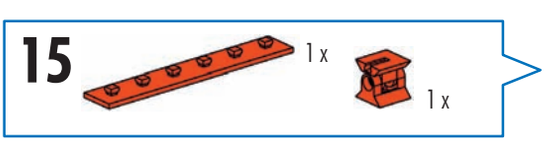
15
1 x
1 x

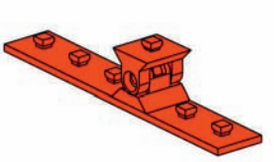

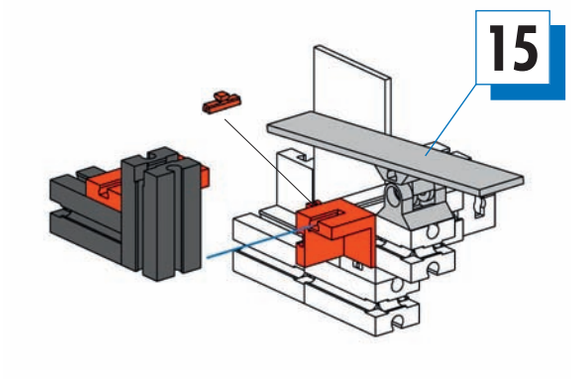

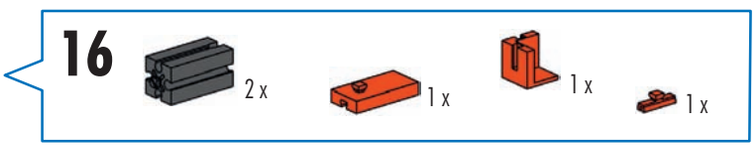

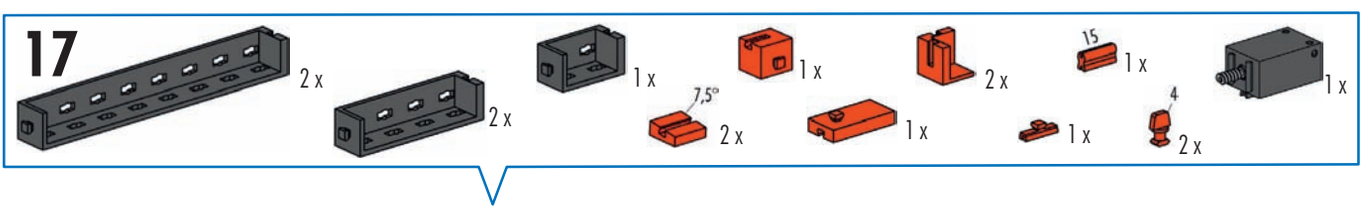

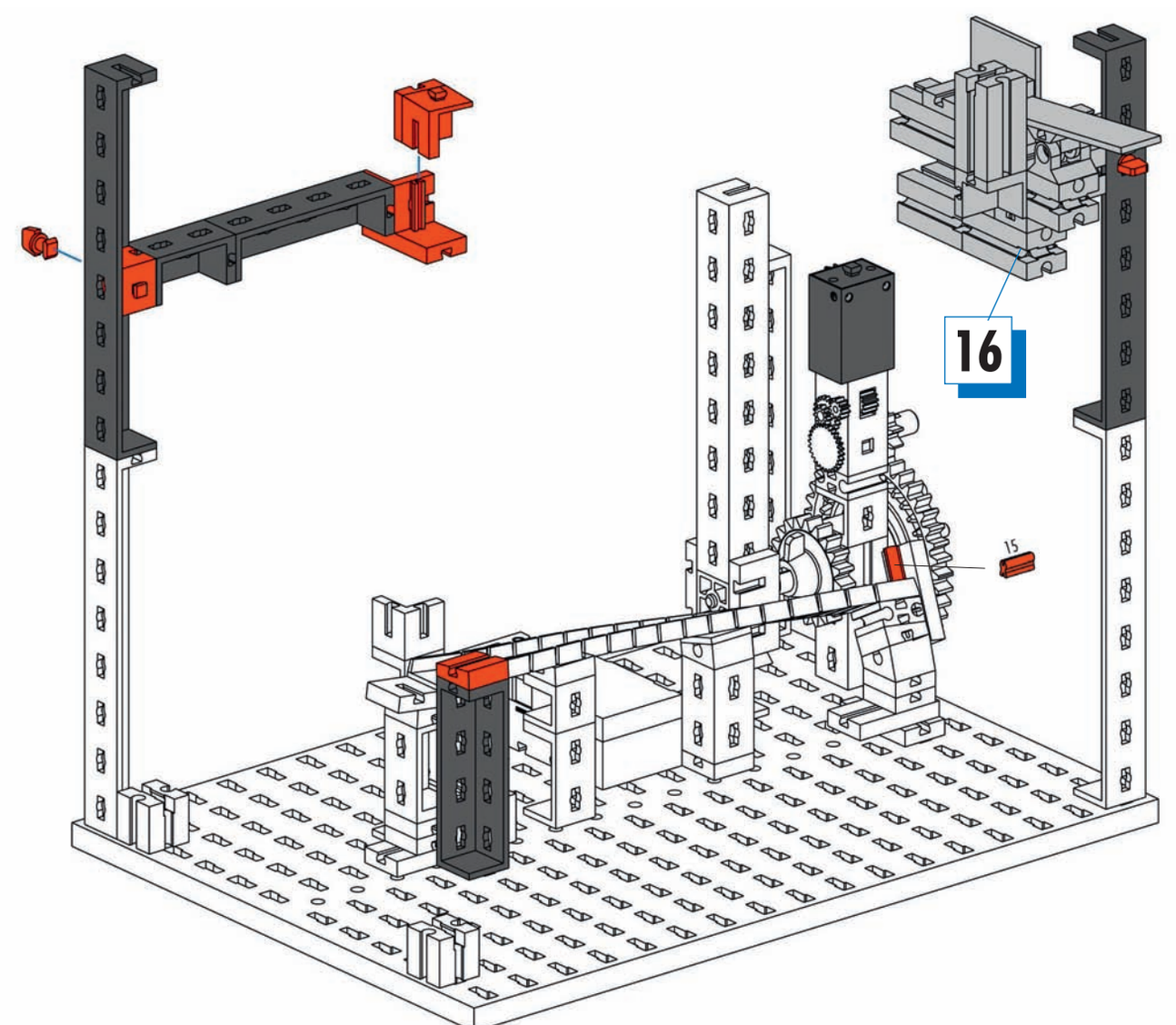

609

18

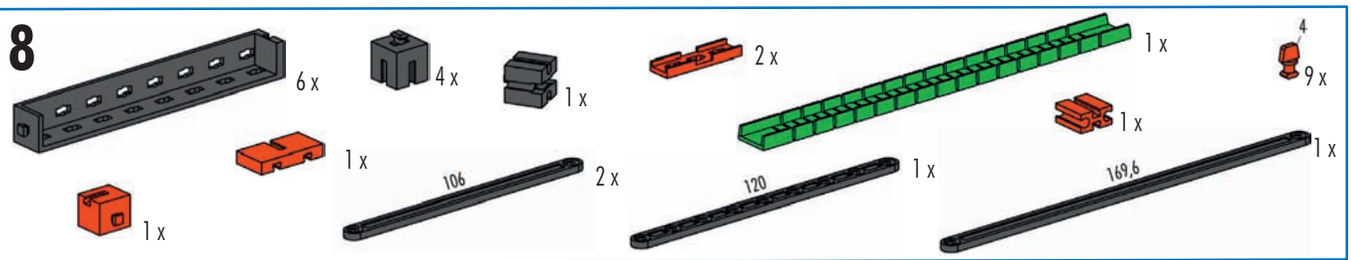

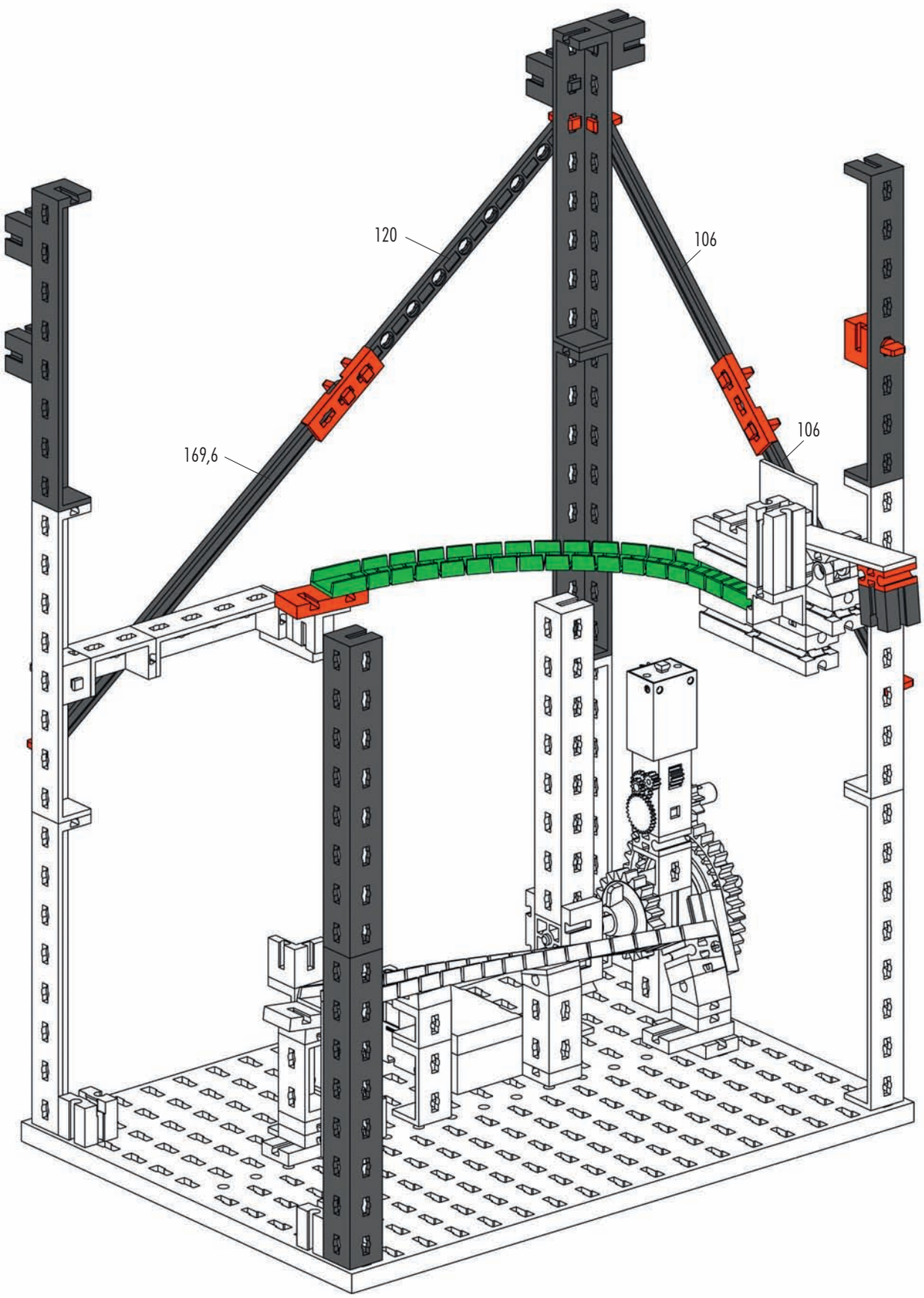

610

19

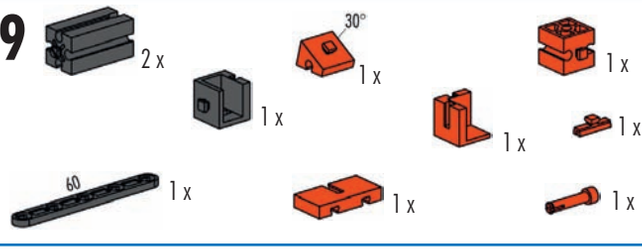
2 x
30°
1 x
1 x
1 x
1 x
1 x
60
1 x
1 x
1 x

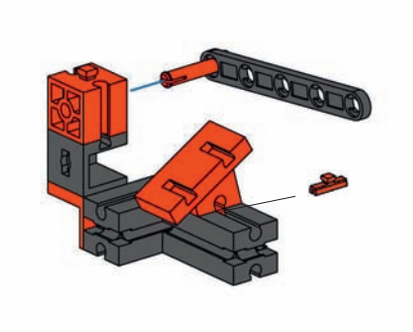

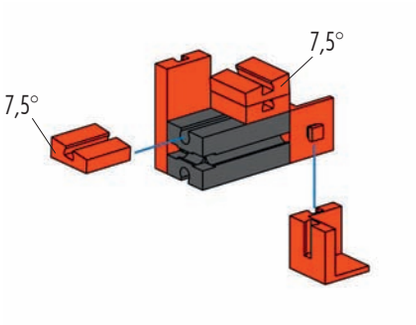
7,5°
7,5°

20

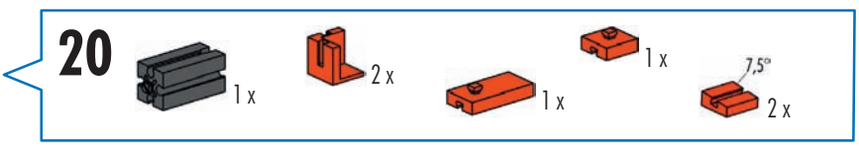
1 x
2 x
1 x
1 x
7,5°
2 x

21

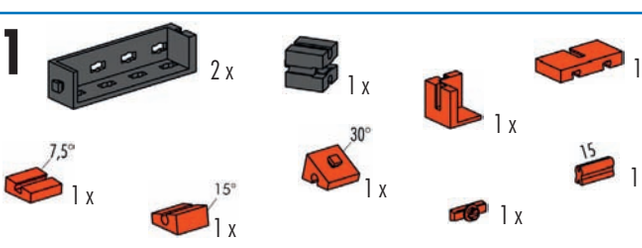
2 x
1 x
1 x
1 x
7,5°
1 x
30°
1 x
15
1 x
15°
1 x
1 x

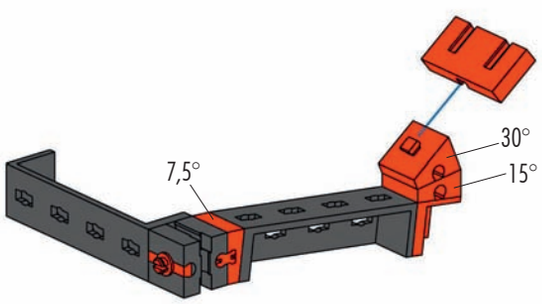
30°
15°
7,5°

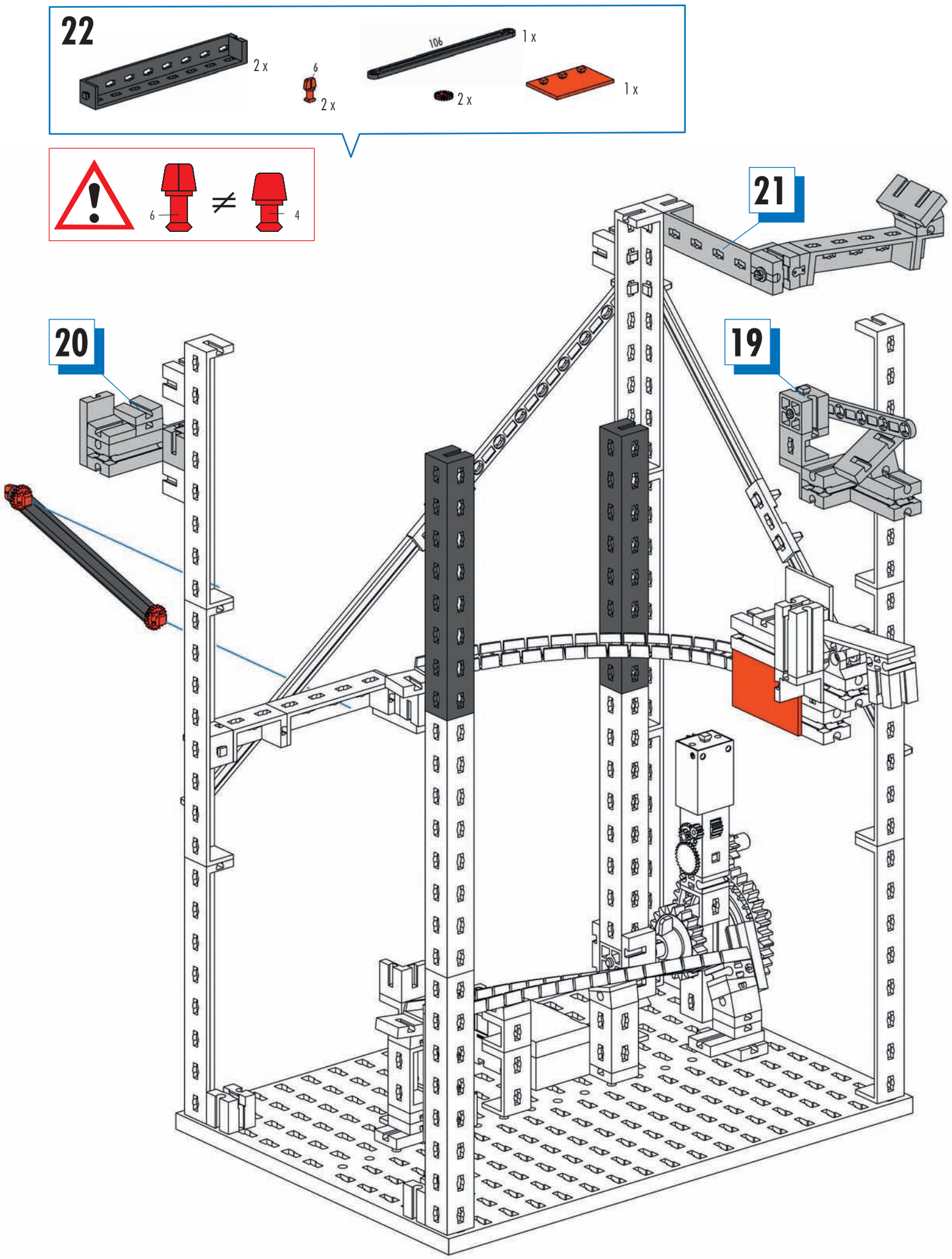
22
2 x
6
2 x
106
1 x
2 x
1 x
6
≠
4
21
20
19

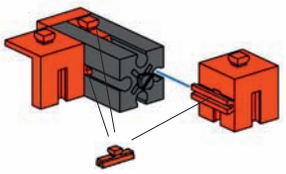

23

1 x 1 x 2 x 3 x

24

2 x 2 x 1 x 3 x 1 x 2 x 1 x 1 x 7,5° 1 x 1 x 2 x

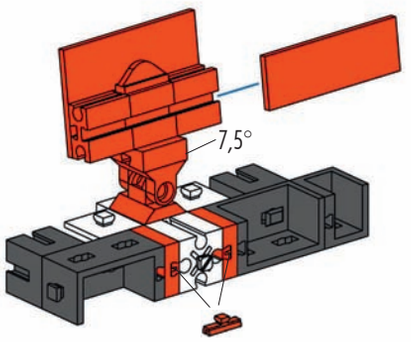

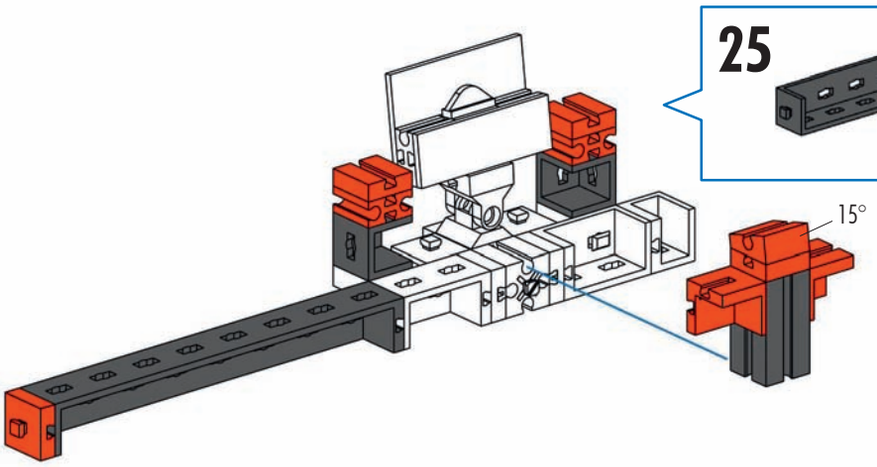

25

1 x 2 x 1 x 2 x 4 x 15° 1 x 2 x

26

1 x 2 x 1 x 15° 1 x 7,5° 1 x

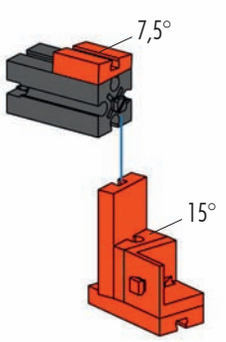

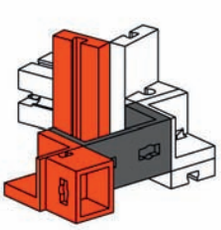

27

1 x 1 x 1 x 1 x

28

1 x 1 x 1 x 2 x 1 x 1 x 15° 1 x 30° 1 x

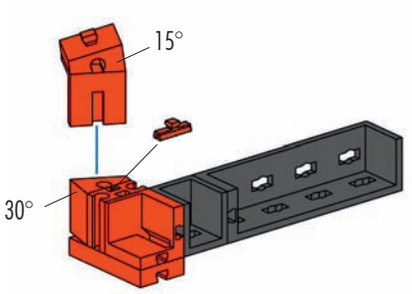

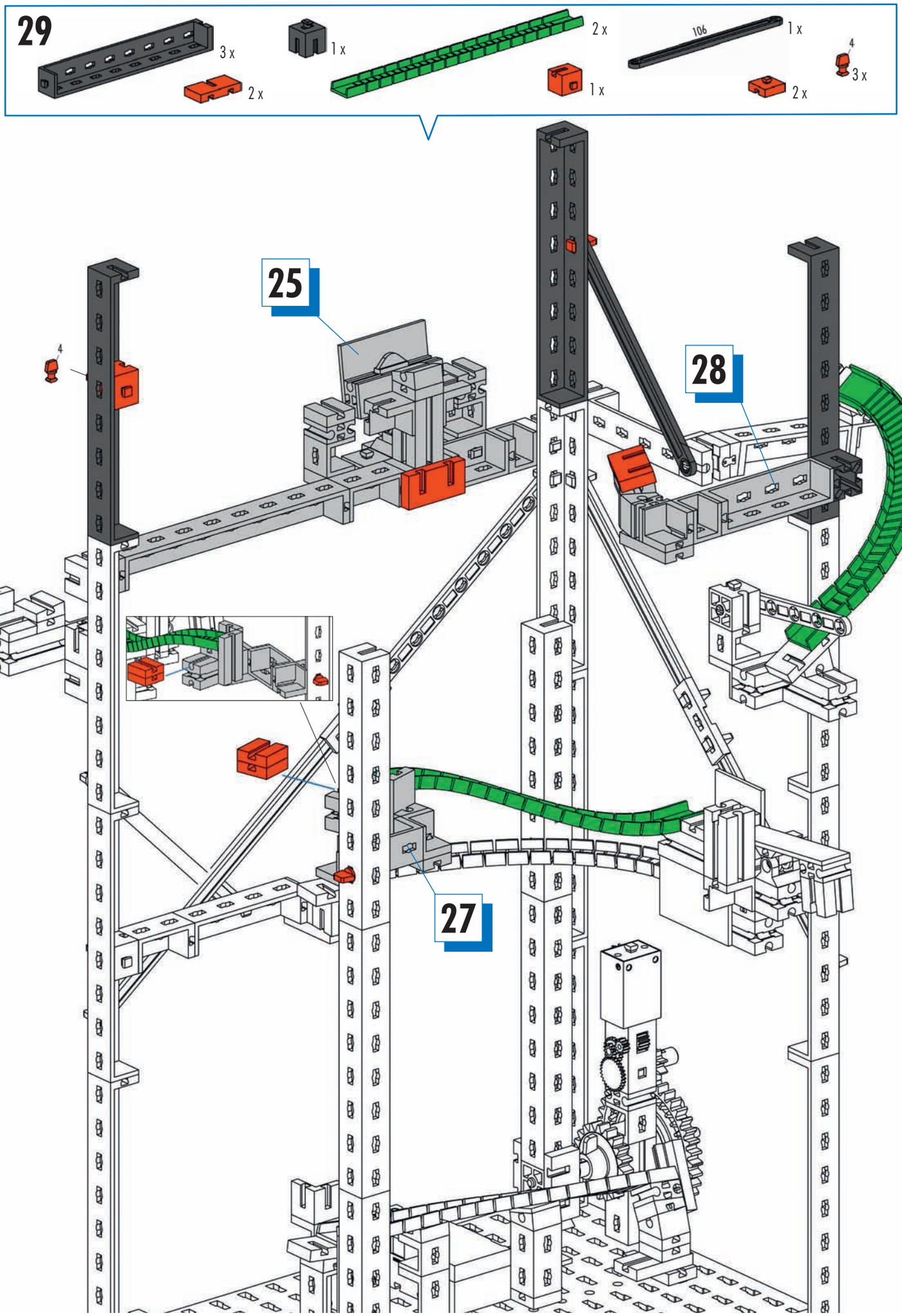
29
3 x
2 x
1 x
2 x
1 x
106
1 x
2 x
4
3 x
25
28
27
4

30

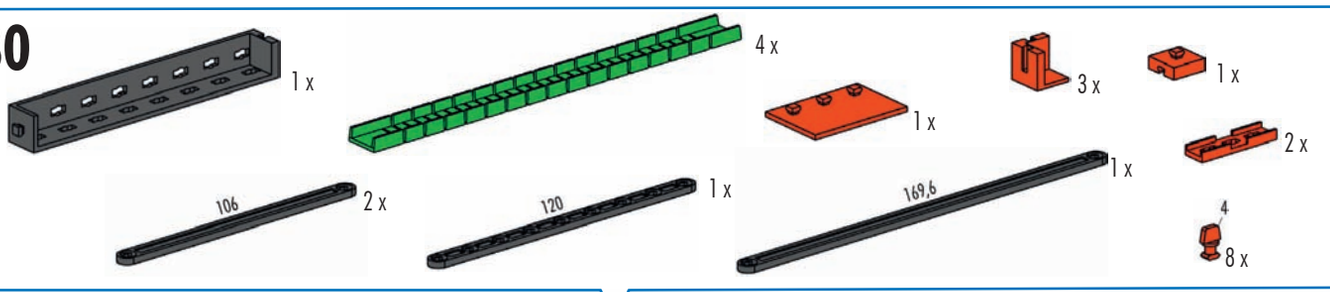

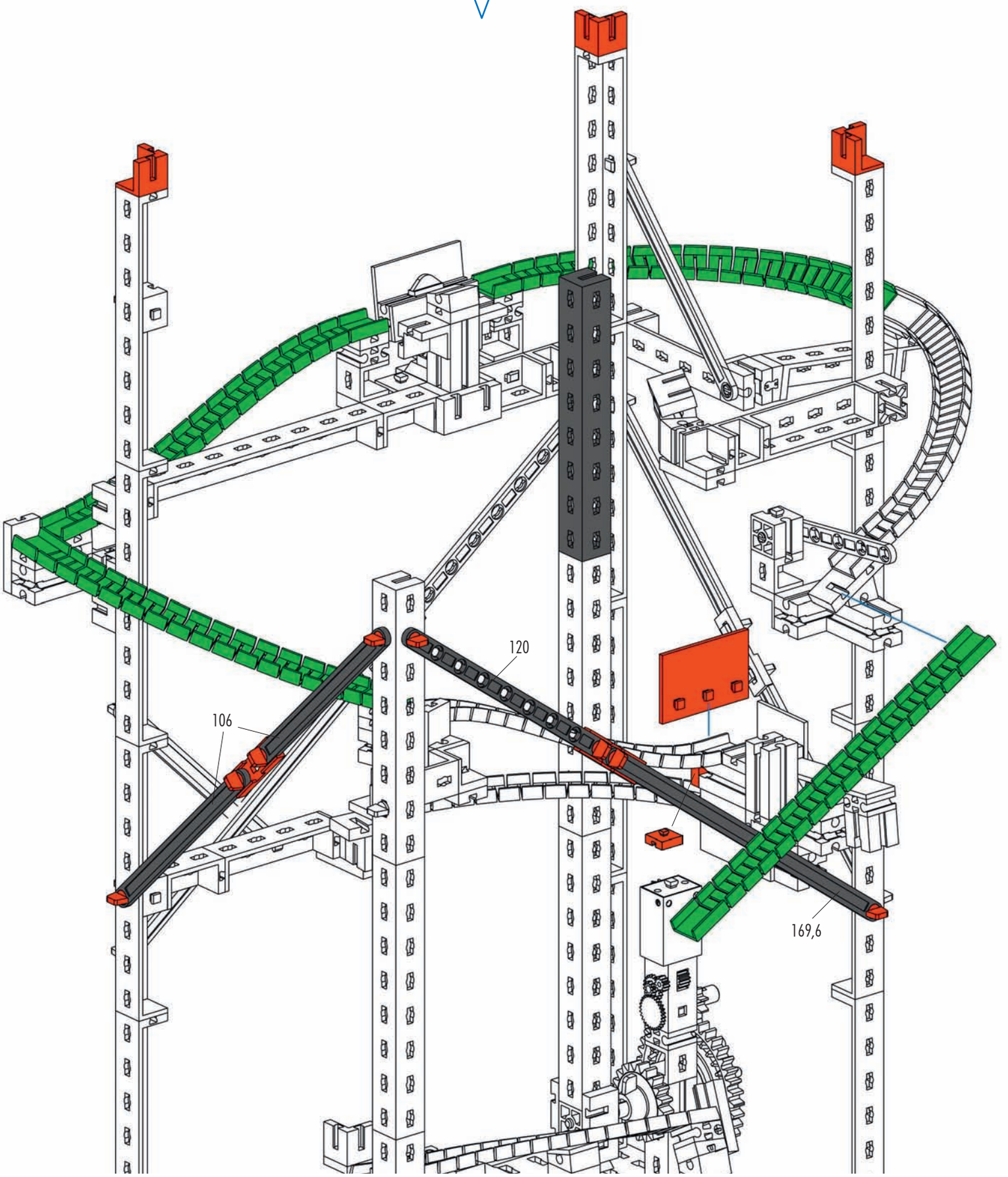

615

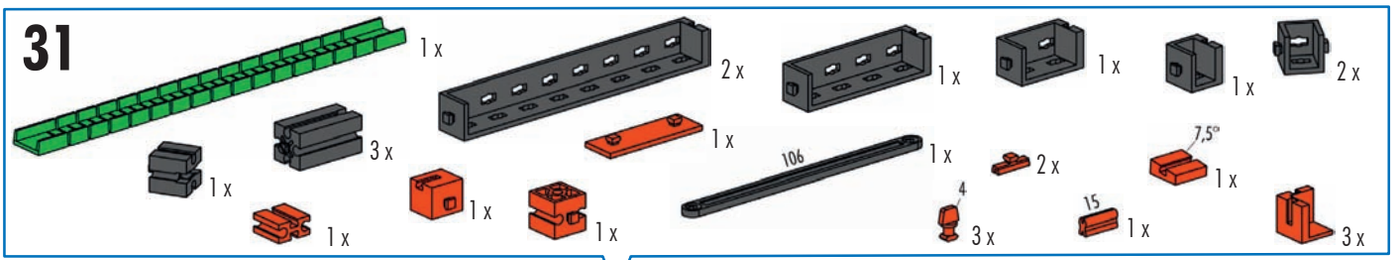
31
1 x
2 x
1 x
1 x
1 x
2 x
1 x
3 x
1 x
1 x
106
1 x
2 x
7,5°
1 x
1 x
1 x
4
3 x
15
1 x
3 x

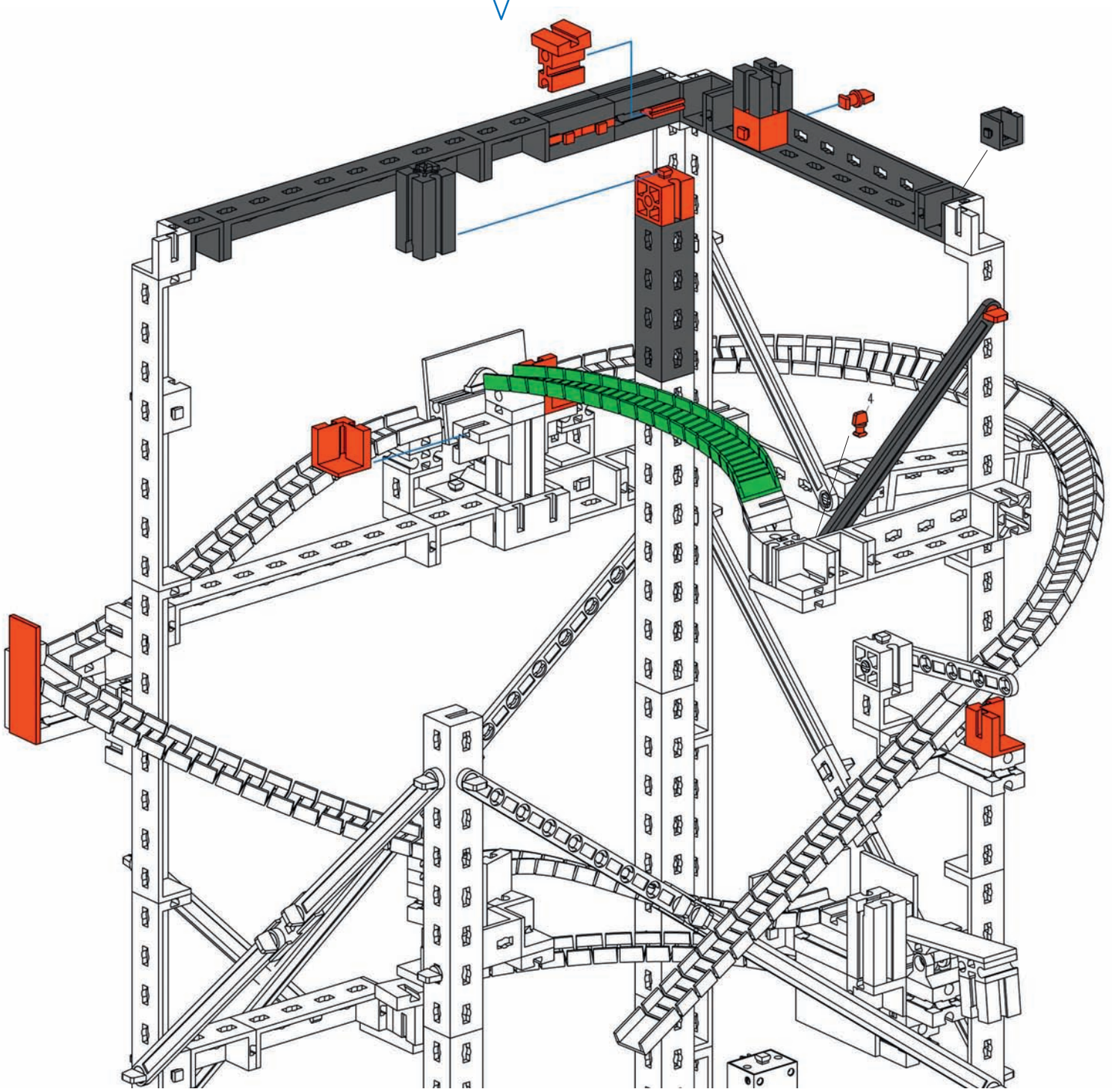
4

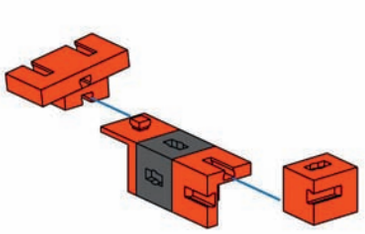

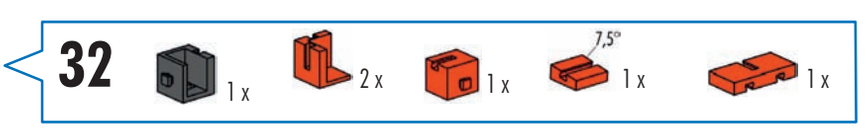
32
1 x
2 x
1 x
7,5°
1 x
1 x

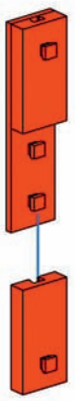

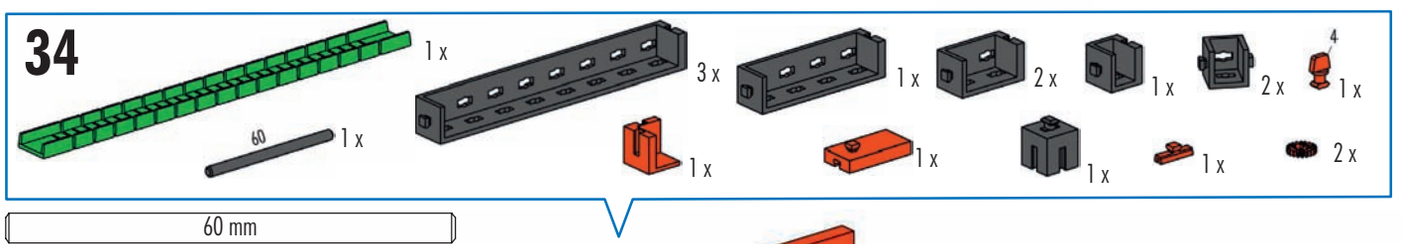

60 mm

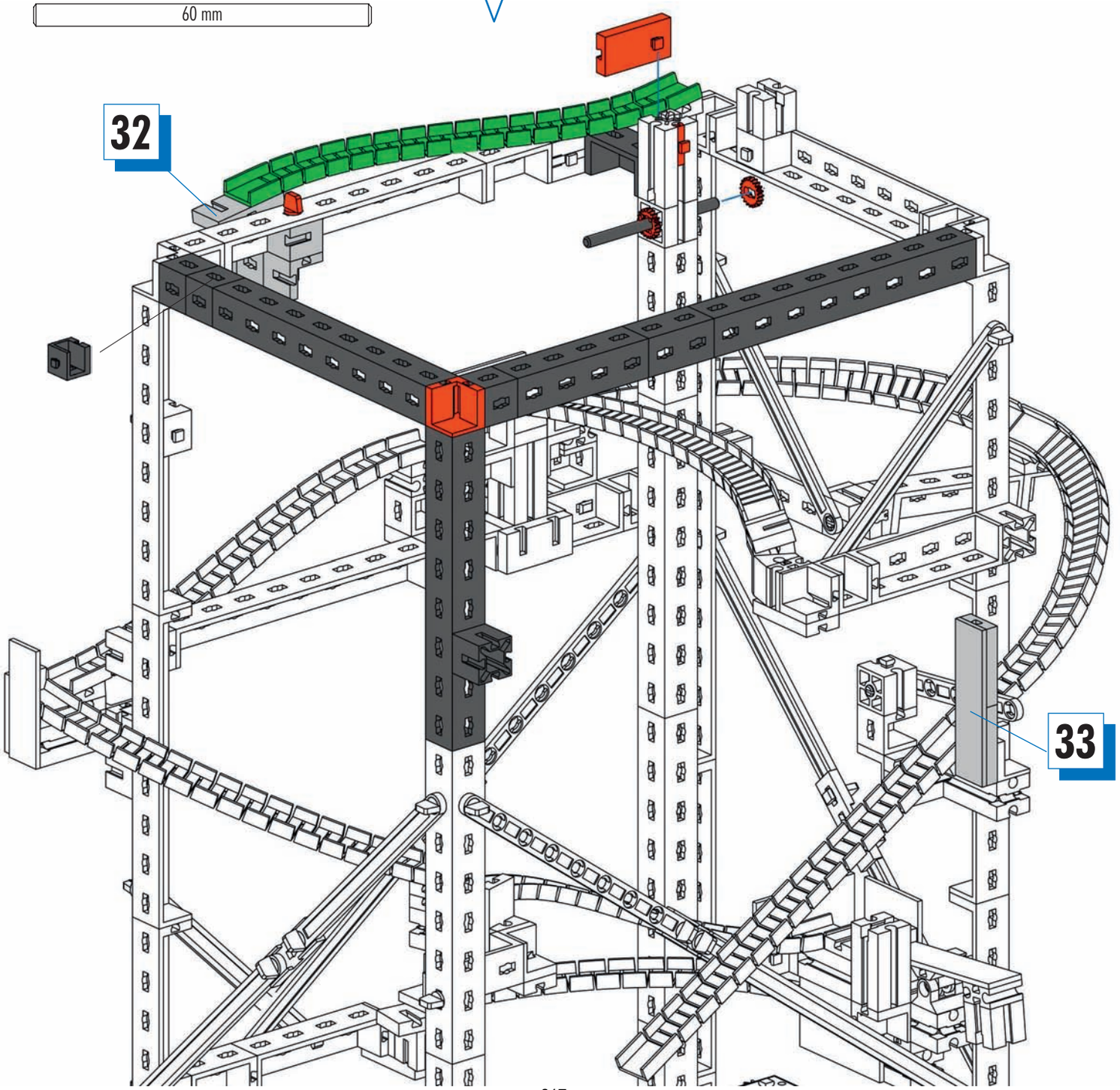

617

35

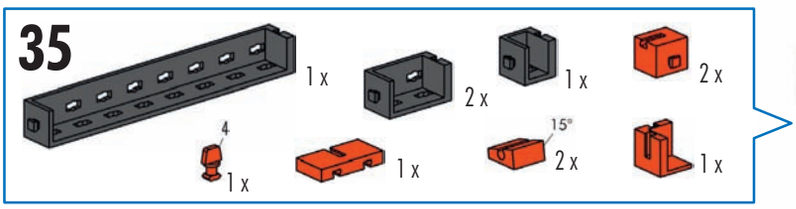

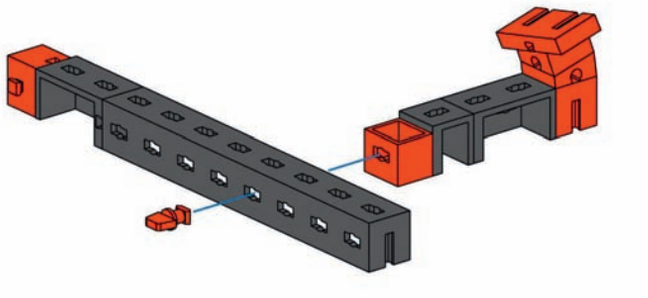

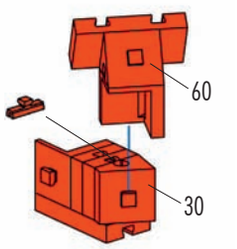

36

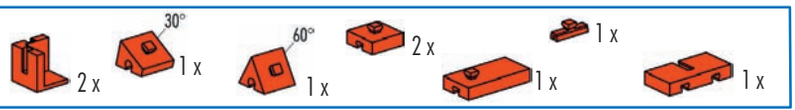

37

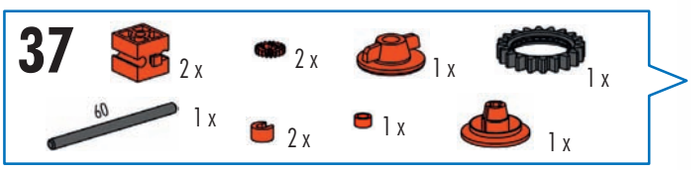

60 mm

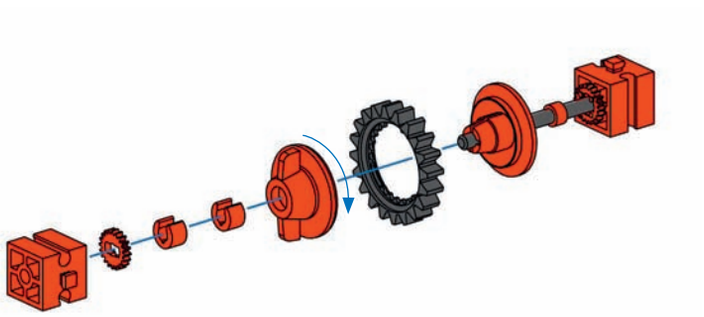

38

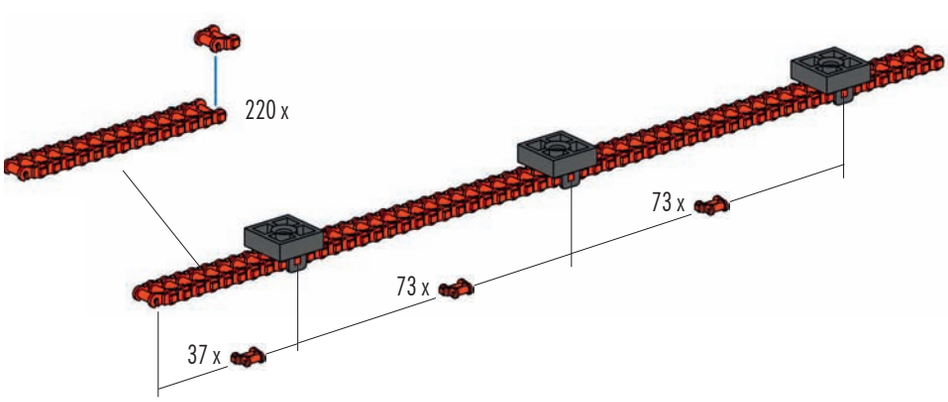

39

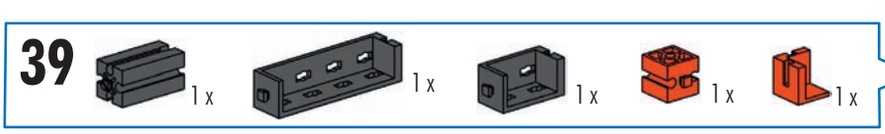

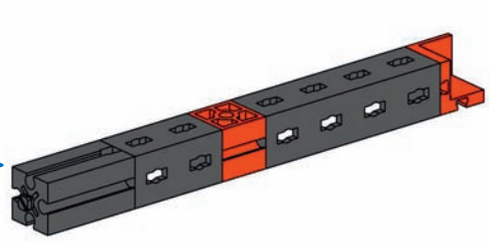

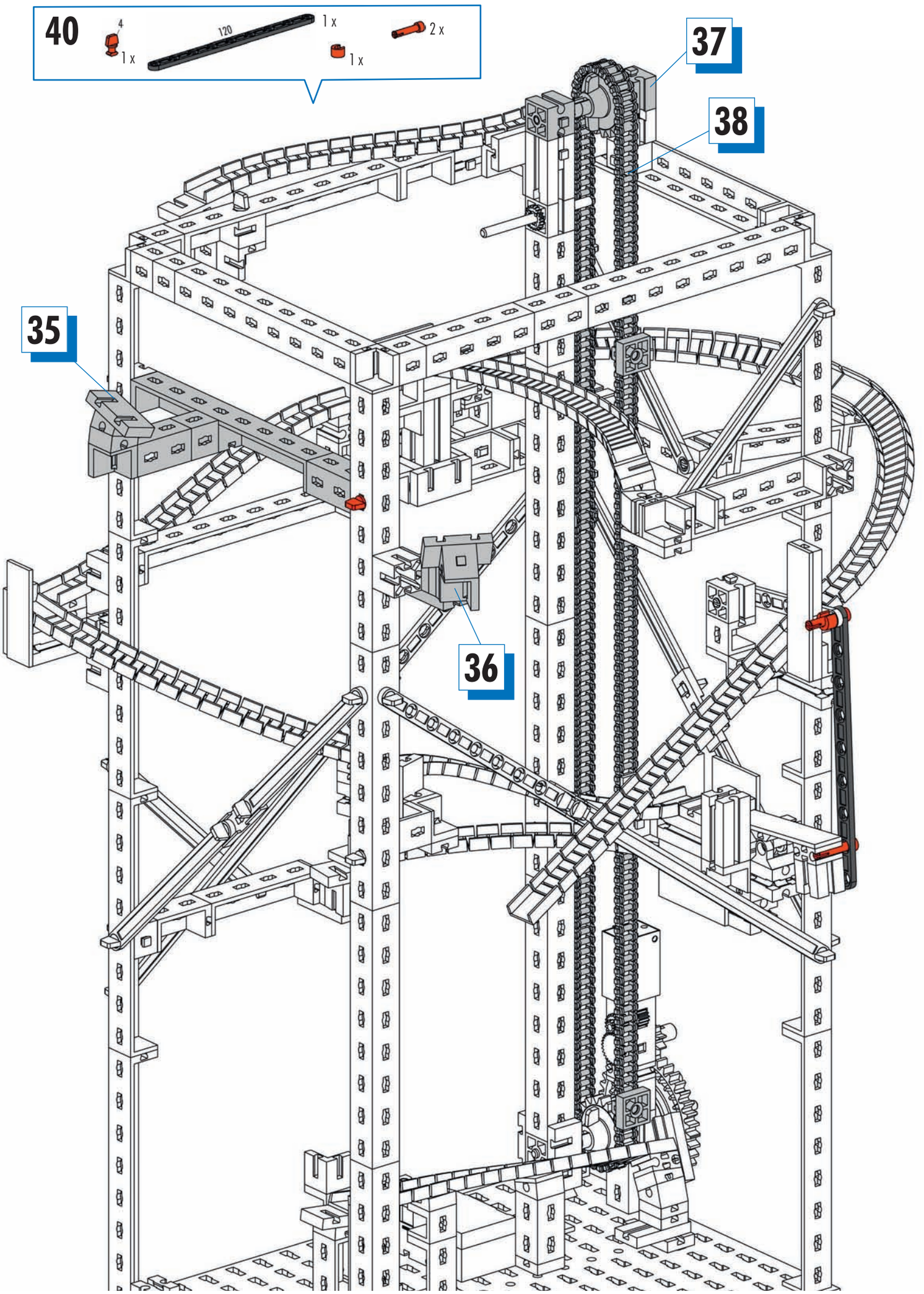

619

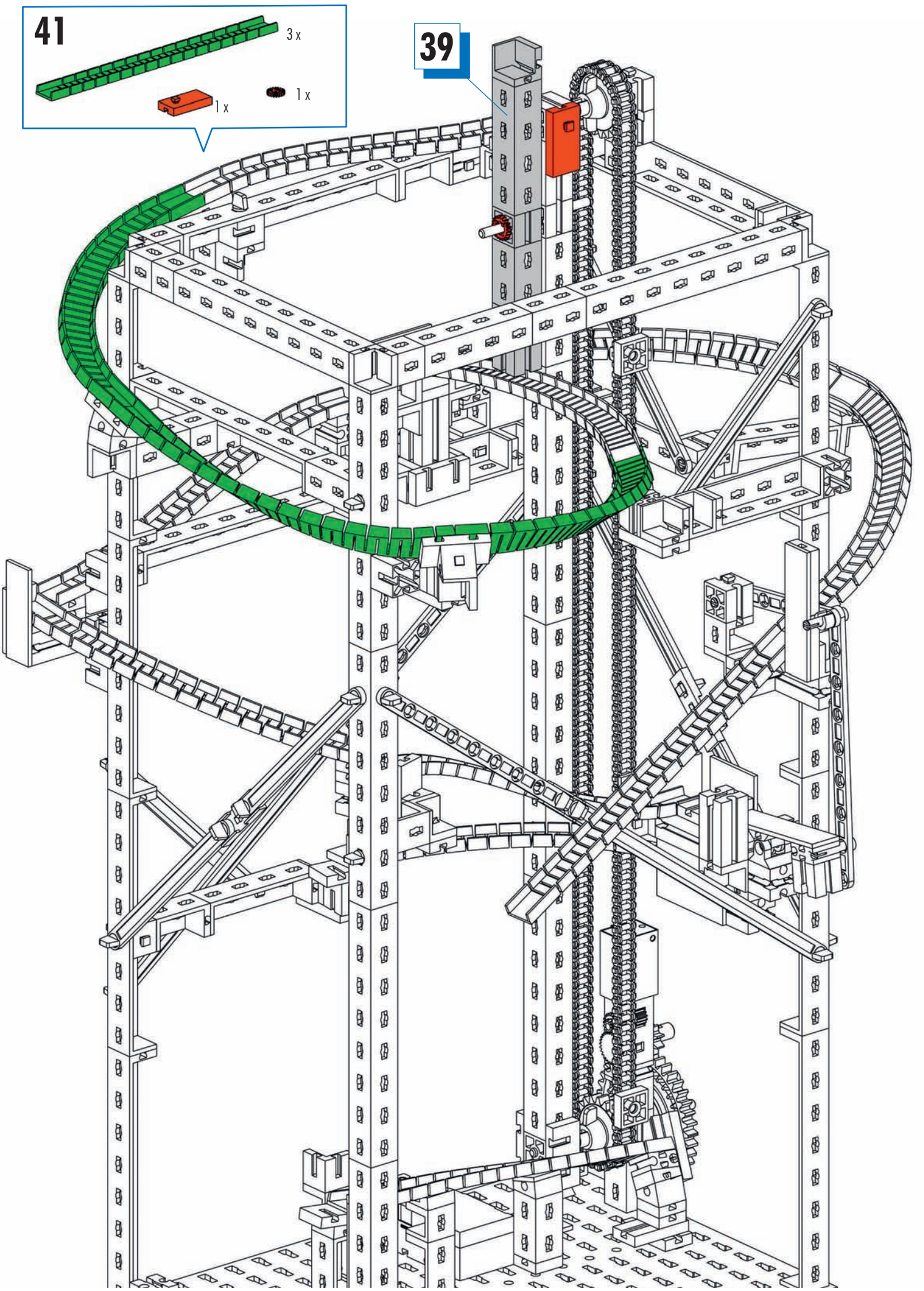
41
3 x
1 x
1 x
39

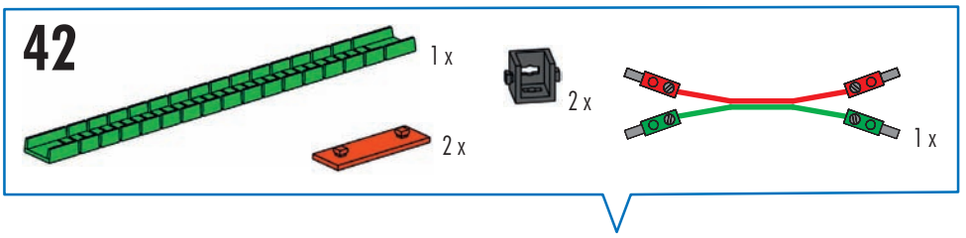
42
1 x
2 x
2 x
1 x

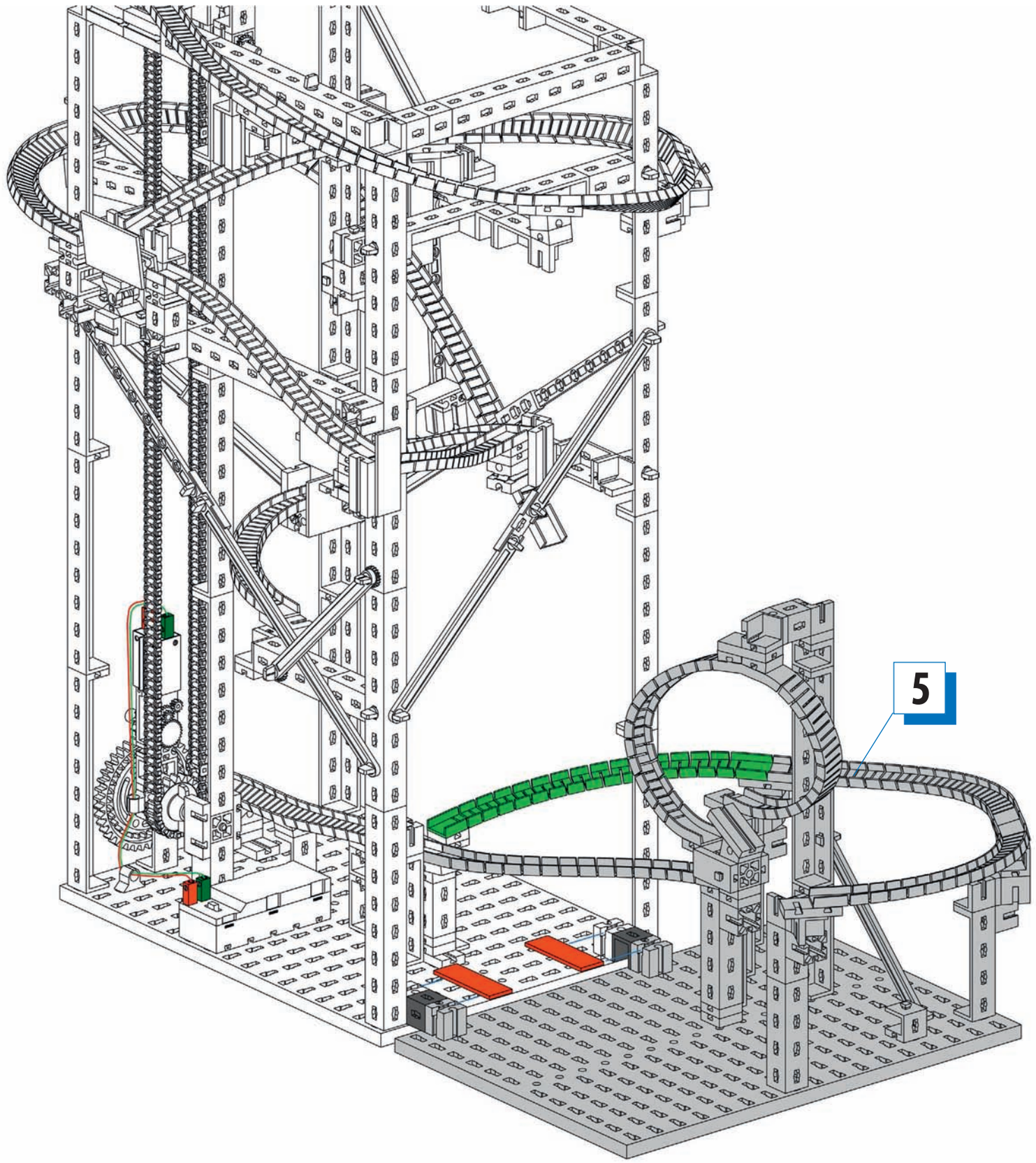
5

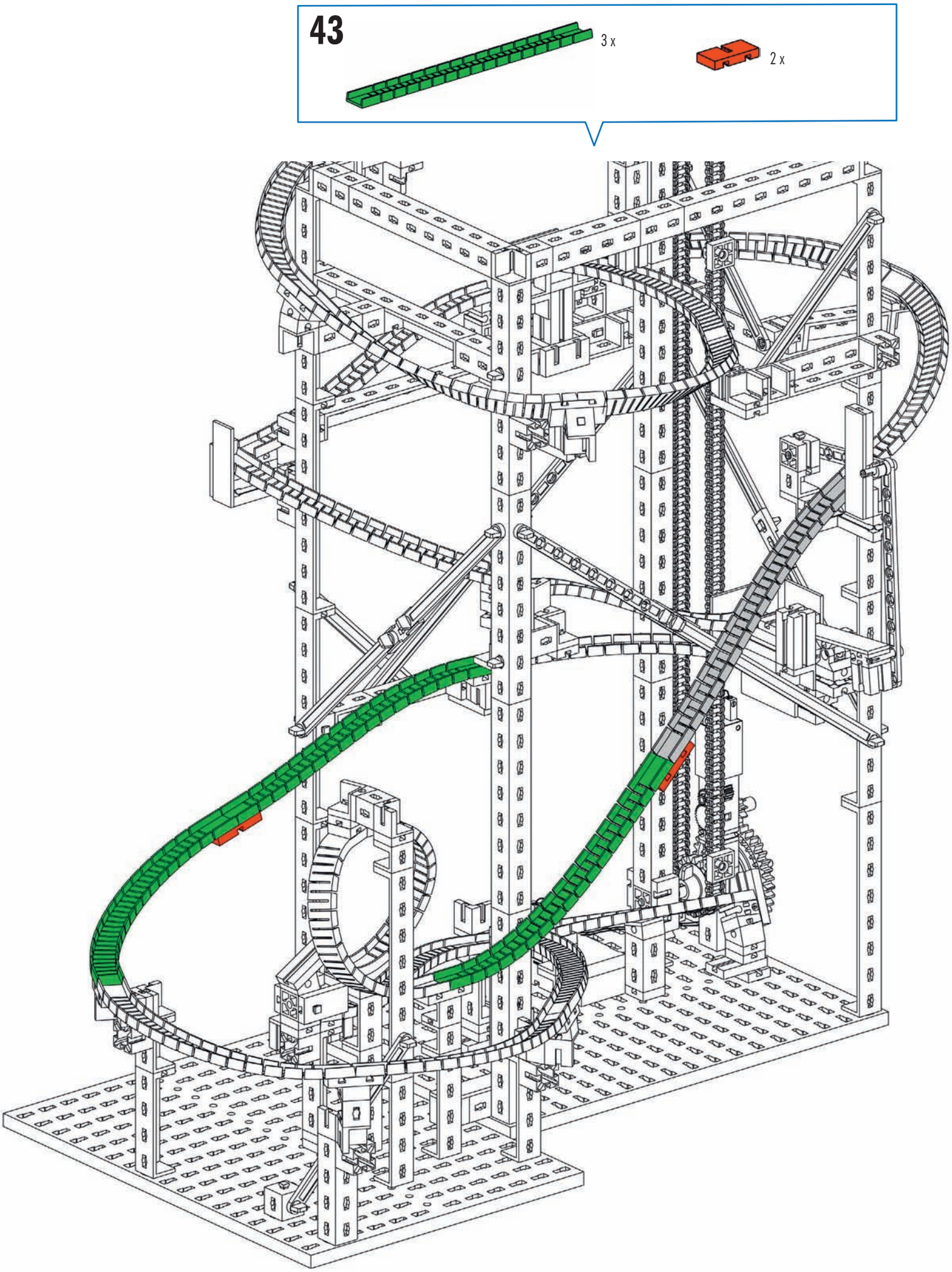
43
3 x
2 x

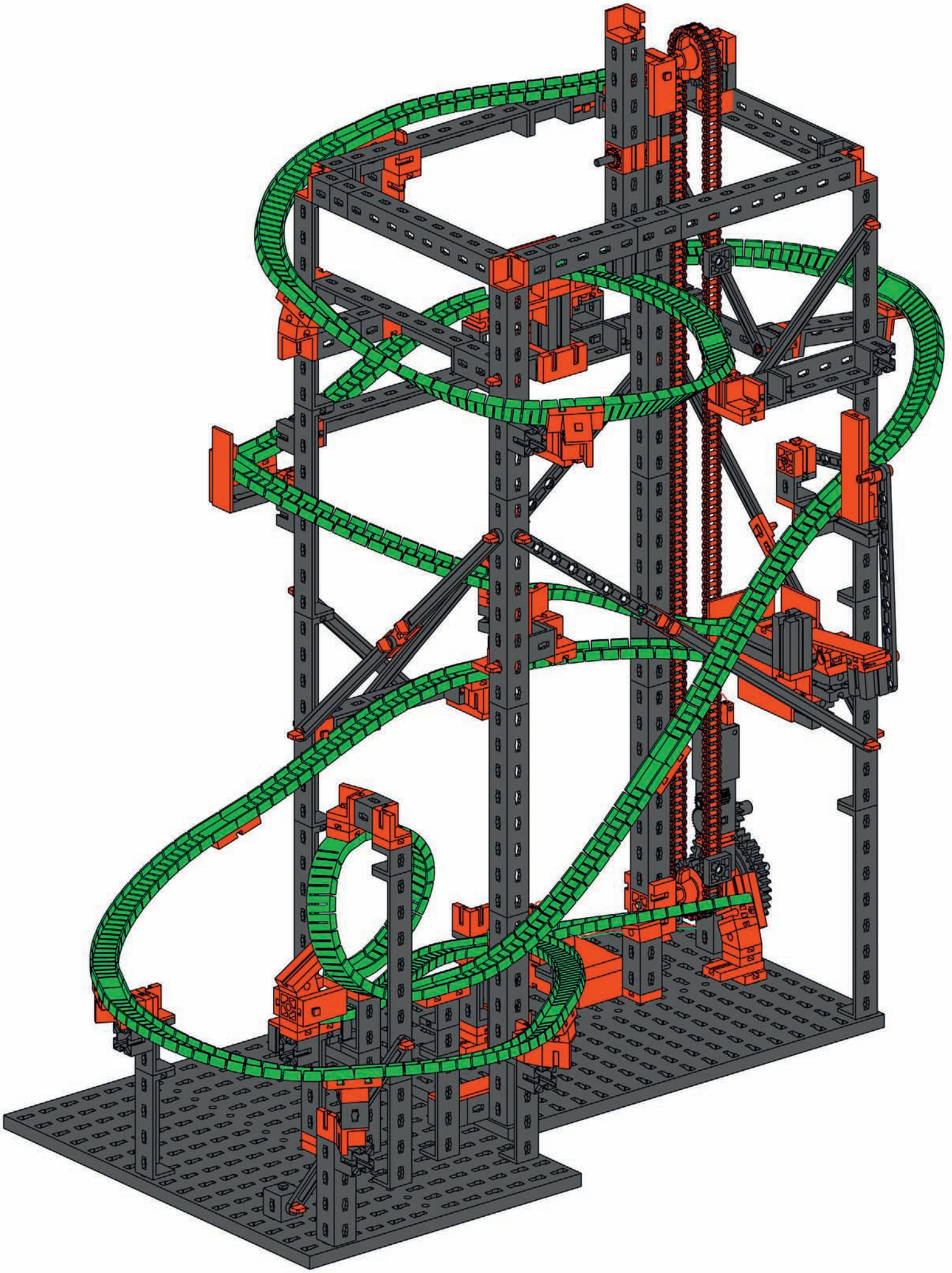

623

fischertechnik

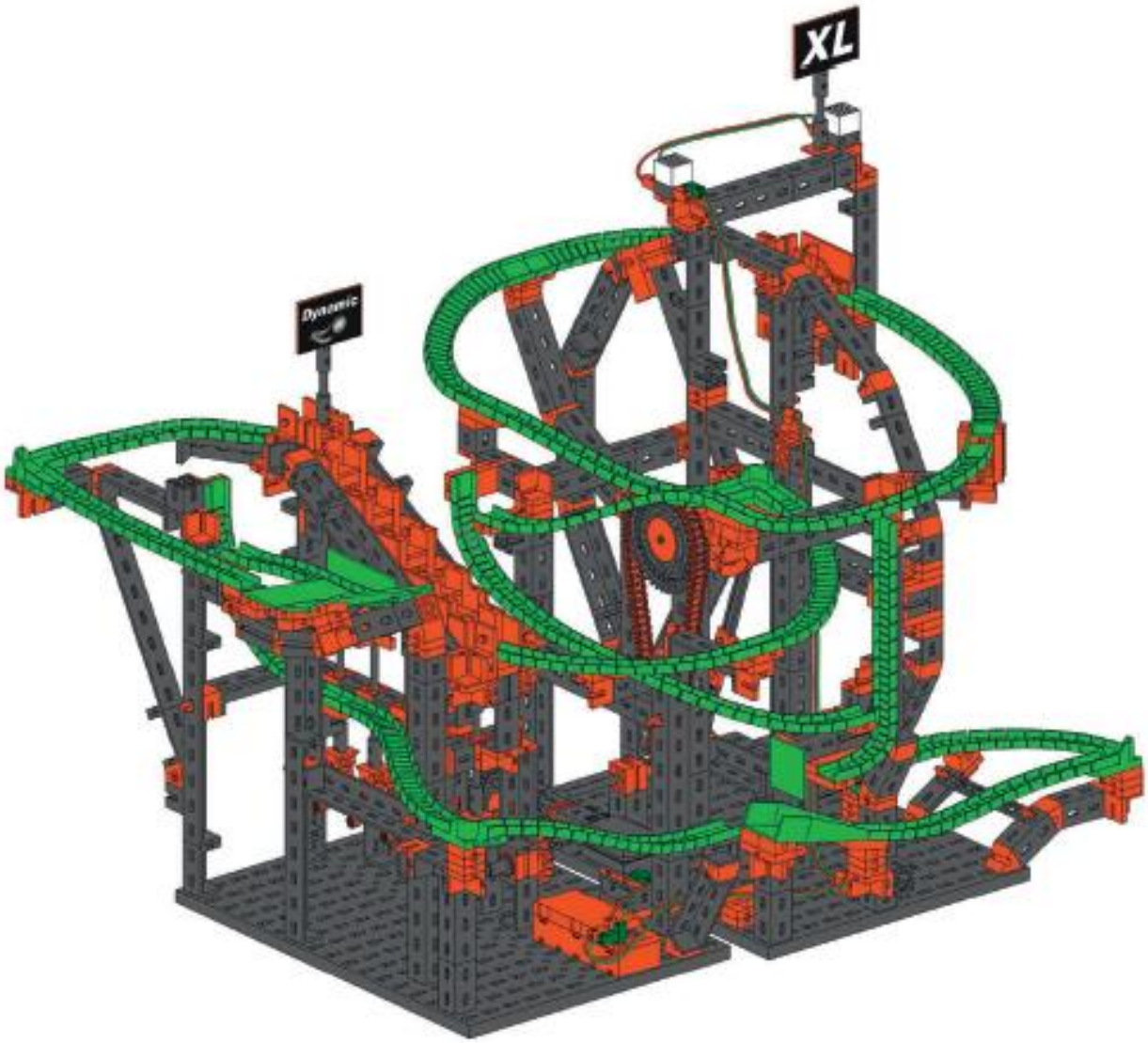

Physics II

Inhalt
Contents
Contenu
Inhoud
Contenido
Conteúdo
Contenuto
Содержание
目录

Einzelteilübersicht / Spare parts list / Liste des pièces détachées / Onderdelenoverzicht / Lista da piezas / Resumo de peça individual / Singoli componenti / Перечень деталей / 零件概览 2
Montagetipps / Tips for assembly / Tuyaux pour le montage / Montagetips / Consejos para el montaje / "Dicas" para montagem / Consigli per il montaggio / Советы по сборке / 装配建议 3

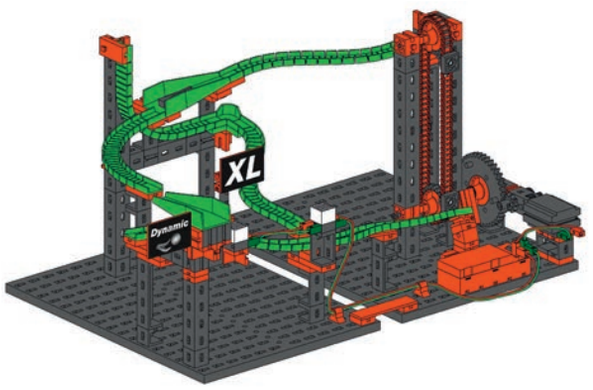

Kettenförderer / Chain conveyor / Transporteur à chaîne / Kettingtransporteur / Transportador de cadena / Transportadora de corrente / Convogliatore a catena / Цепной транспортёр / 链式输送机 6

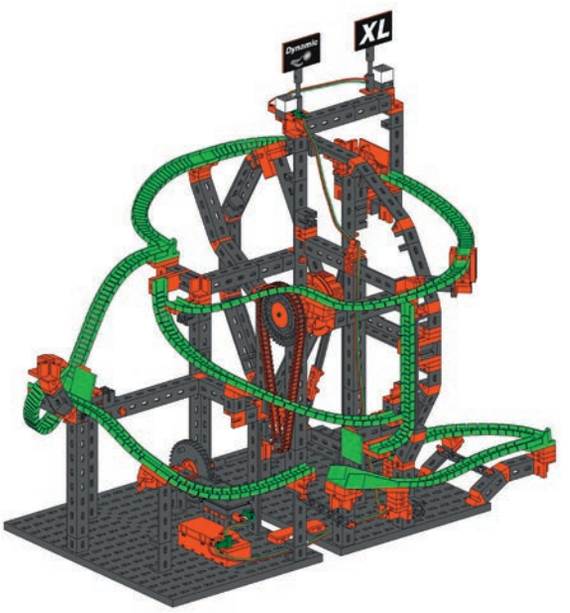

Radförderer / Wheel conveyor / Transporteur à roue / Wieltransporteur / Transportador de ruedas / Transportadora de roda / Convogliatore a ruota / Роторный транспортёр / 斗轮输送机.....15

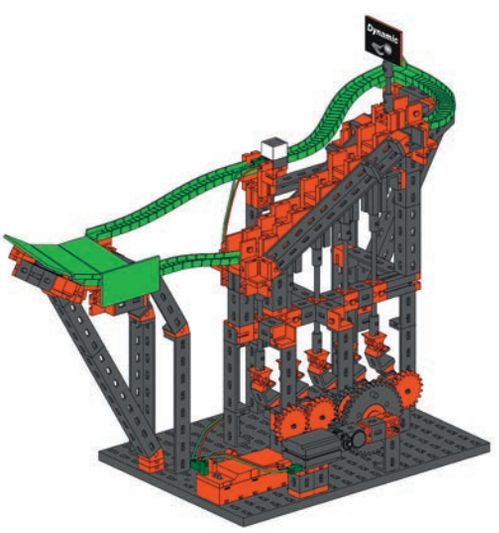

Treppenförderer / Stair step conveyor / Monte-escalier / Trapsgewijze transporteur / Transportador de escalera / Transportadora de escada / Convogliatore a scala / Лестничный транспортёр / 阶梯式输送机.....33

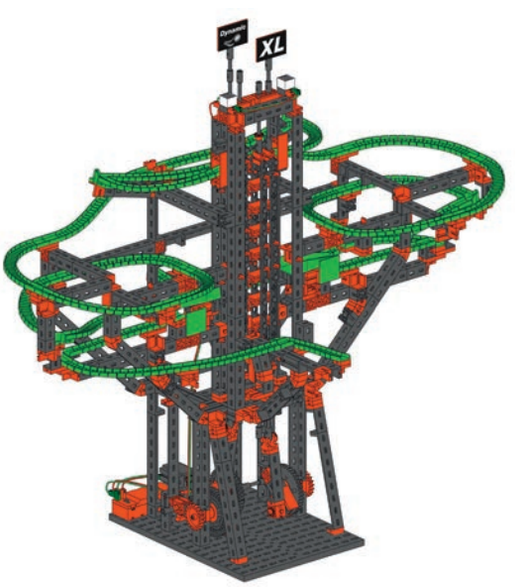

Stufenförderer / Stage conveyor / Transporteur vertical / Paternosterlift / Transportador de escalones / Transportadora de degraus / Convogliatore a gradini / Ступенчатый транспортёр / 矿井升降机式输送机.....47

Inhalt
Contents
Contenu
Inhoud
Contenido
Conteúdo
Contenuto
Содержание
目录

Schießförderer / Spring launcher / Lance-bille / Schietmechanisme / Transportador de disparo / Transportadora de arremesso / Convogliatore a tiro / Выстреливающий транспортёр / 弹射式输送机..... 75

Ketten- und Schießförderer / Chain conveyor and spring launcher / Transporteur à chaîne lance-bille / Kettingtransporteur en schietmechanisme / Transportador de cadena y de disparo / Transportadora de corrente e de arremesso / Convogliatore a catena e a tiro / Цепной и выстреливающий транспортёр / 链式和弹射式输送机混合搭配 89

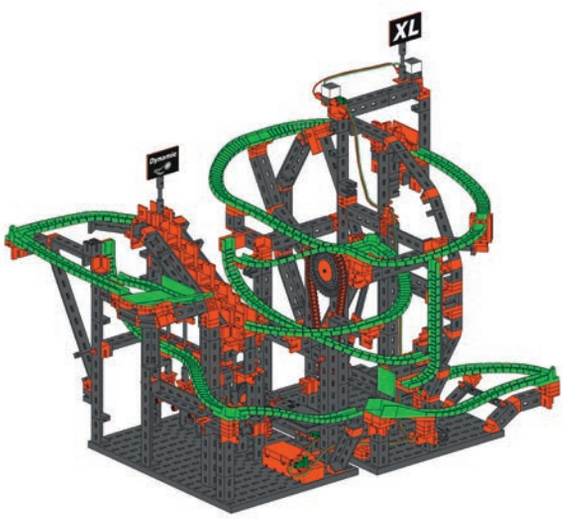

Rad- und Treppenförderer / Wheel and stair step conveyor / Transporteur à roue monte-escalier / Wiel- en trapsgewijze transporteur / Transportador de ruedas y de escalera / Transportadora de roda e de corrente / Convogliatore a ruota e a scala / Роторный и лестничный транспортёр / 斗轮式和阶梯式输送机混合搭配..... 101

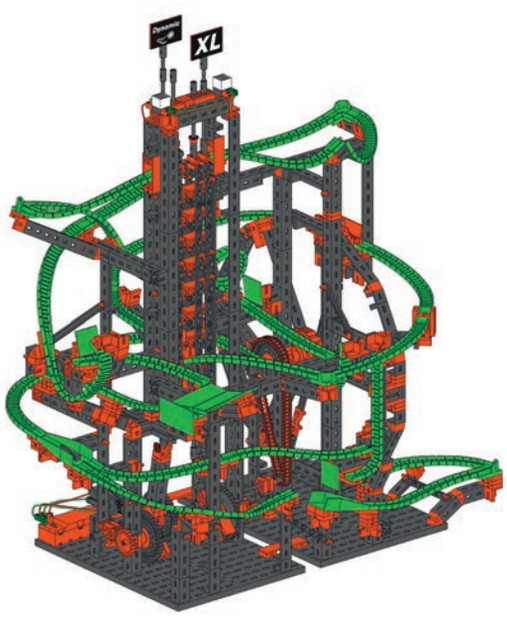

Rad- und Stufenförderer / Wheel and stage conveyor / Transporteur à roue vertical / Wieltransporteur en paternosterlift / Transportador de ruedas y de escalones / Transportadora de roda e de degraus / Convogliatore a ruota e a gradini / Роторный и ступенчатый транспортёр / 斗轮式和矿井升降机式输送机混合搭配..... 108

Einzelteilübersicht
Spare parts list
Liste des pièces détachées

Onderdelenoverzicht
Lista da piezas
Resumo de peça individual

Singoli componenti
Перечень деталей
零件概览

	31 010 13 x
	31 011 31 x
	31 019 1 x
	31 021 2 x
	31 022 4 x
	31 058 5 x
	31 060 3 x
	31 078 1 x
	31 082 1 x
	31 336 6 x
	31 337 6 x
	31 426 6 x
	31 436 11 x
	31 597 3 x
	31 602 1 x
	31 668 1 x
	31 690 2 x
	31 981 26 x
	31 982 52 x
	31 983 3 x
	32 064 32 x
	32 071 29 x
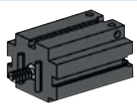	32 293 1 x
	32 321 2 x
	32 330 8 x
	32 850 15 x
	32 870 42 x
	32 879 17 x
	32 880 2 x
	32 881 10 x
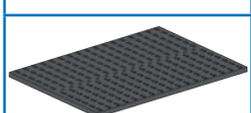	32 985 2 x
	35 031 5 x
	35 049 42 x
	35 063 6 x
	35 064 4 x
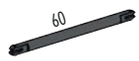	35 065 2 x
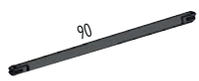	35 066 3 x
	35 073 9 x
	35 086 2 x
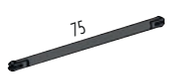	35 087 10 x
	35 088 5 x
	35 799 1 x
	35 945 4 x
	35 969 2 x
	36 227 14 x
	36 248 86 x
	36 293 32 x
	36 323 59 x
	36 334 10 x
	36 370 3 x
	36 382 1 x
	36 443 1 x
	36 819 5 x
	36 913 10 x
	36 914 12 x
	36 920 48 x
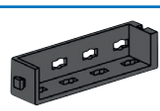	36 921 40 x
	36 922 47 x
	36 923 4 x
	36 950 26 x
	36 973 9 x
	37 237 71 x
	37 238 12 x
	37 468 65 x
	37 636 2 x
	37 679 54 x
	38 216 2 x
	38 240 70 x

	38 241 21 x		38 428 12 x		135 719 1 x		151 715 5 x
	38 242 5 x		38 464 2 x		137 677 4 x		151 716 2 x
	38 246 2 x	120	38 546 18 x		143 234 31 x		151 717 1 x
	38 248 3 x	169,6	119 753 2 x		144 262 12 x		152 249 4 x
30	38 413 1 x		119 850 3 x		146 378 2 x	Dynamic XL	152 657 1 x
60	38 416 1 x		132 875 2 x		146 534 3 x		

Montagetipps
Tips for assembly
Tuyaux pour le montage
Montagetips
Consejos para el montaje
”Dicas” para montagem
Consigli per il montaggio
Советы по сборке
装配建议

Kabel und Stecker
Plugs and cables
Fiches et des câbles

Stekkers en cables
Enchufes en cables
Cabos e contatos

Cavi e connettori
Провода и штекеры
电缆和插头

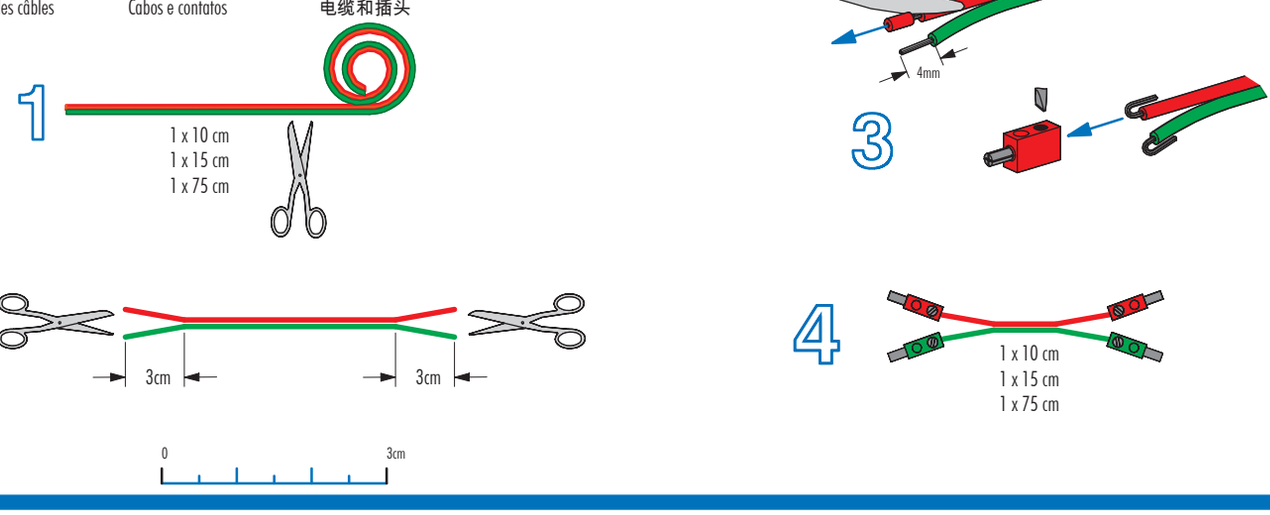

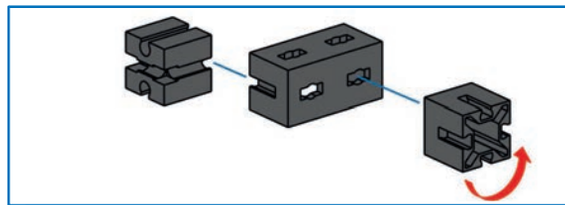

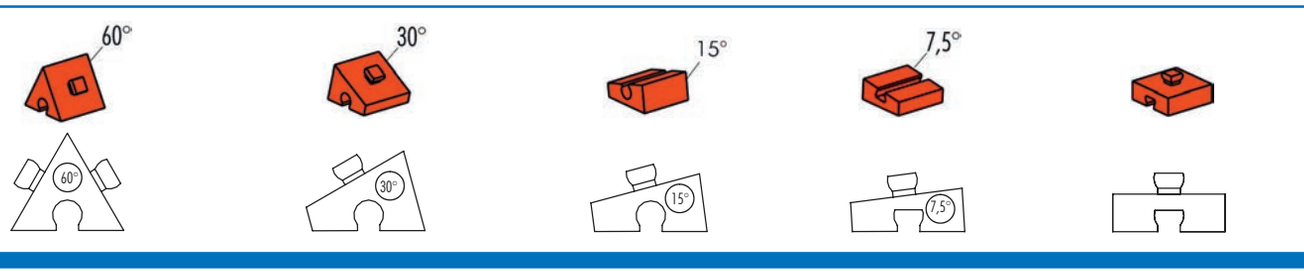

Montagetipps
Tips for assembly
Tuyaux pour le montage

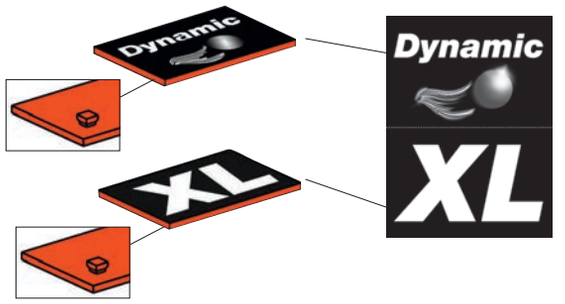

Montagetips
Consejos para el montaje
"Dicas" para montagem

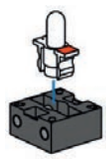

9V ⎓

Rainbow LED
Rainbow LED
DEL Rainbow
Rainbow-LED
LED de arco iris
Rainbow LED
Rainbow LED
Светодиод „радуга“
LED 彩灯

Consigli per il montaggio
Советы по сборке
装配建议

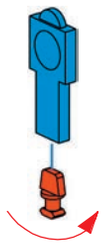

Erfinder Flexprofil 143 234, Entwickler 90° Kurve 151 715 und Wechselweiche 151 716+151 717

Design und Konzeption Andreas Lehrberger

Sicherheitshinweise
Safety Information
Consignes de sécurité

Veiligheidsrichtlijnen
Indicaciones de seguridad
Observações sobre segurança

Informazioni per la sicurezza
Указания по технике безопасности
安全指南

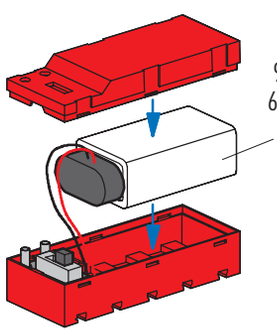

9V E-Block
6F22 / 6R61
⎓

Batterie ist nicht Inhalt der Packung
Battery not included
Batterie non comprise
De batterij wordt niet meegeleverd
La batería no está incluida en el suministro
A bateria não é o conteúdo da embalagem
La batteria non è inclusa nella confezione
Батарея в комплект не входит
包装中不含电池

1 Batterie 9Volt-Block Alkaline oder 1 NiMH-Akku 9V
- Nicht wiederaufladbare Batterien dürfen nicht geladen werden
- Aufladbare Batterien dürfen nur von Erwachsenen geladen werden
- Aufladbare Batterien sind aus dem Batteriehalter herauszunehmen, bevor sie geladen werden.
- Batterien müssen mit der richtigen Polarität eingelegt werden.
- Leere Batterien müssen aus dem Spielzeug herausgenommen werden
- Die Anschlussklemmen dürfen nicht kurzgeschlossen werden.
- Verbrauchte Batterien dem Sondermüll zuführen.
- Drähte nicht in Steckdose einführen!
- Ladegerät regelmäßig auf Schäden überprüfen.Bei einen Schaden darf das
- Ladegerät bis zur vollständigen Reparatur nicht mehr verwendet werden.

9V rechargeable battery or 9 V alkaline dry cell
- Do not attempt to charge NON-rechargeable batteries.
- Rechargeable batteries are only to be charged by adults.
- Take rechargeable batteries out of the battery tray before charging them.
- Insert batteries with the correct polarity.
- Remove dead batteries from the toy.
- Do not short circuit the connecting terminals!
- Discard spent dry cells at special waste disposal centre.
- Do not insert the wires into an outlet!
- Regularly inspect battery charger for damage.If the battery charger has been damaged, it should not be used further until fully repaired.

pile 9V où accu 9V
- Il est interdit de recharger des piles qui ne sont pas des accumulateurs
- Le chargement des accumulateurs doit toujours se faire par des adultes
- Retirer les accumulateurs du support de pile avant de les recharger.
- Veiller à la polarité correcte lors de la mise en place des piles.
- Retirer impérativement les piles ou accumulateurs vides du jouet.
- Il est interdit de court-circuiter les bornes de raccordement.
- Jeter les piles usagées dans un conteneur spécial réservé à cet effet.
- Ne pas introduire les fils dans une prise !
- Contrôlez régulièrement le chargeur en vue d'éventuelles détériorations
- En cas de détérioration, il est interdit d'utiliser le chargeur jusqu'à ce qu'il ait été intégralement réparé

alkaline batterije of oplaadbare batterije (9Volt)
- Niet-oplaadbare batterijen mogen niet worden opgeladen.
- Oplaadbare batterijen mogen uitsluitend door volwassenen worden opgeladen.
- Oplaadbare batterijen moeten uit de batterijhouder worden verwijderd, voordat deze worden opgeladen.
- De batterijen moeten met de juiste polariteit worden geplaatst.
- Lege batterijen moeten uit het speelgoed worden verwijderd.
- De aansluitklemmen mogen niet worden kortgesloten.
- Afleveren gebruikte batterijen bij het klein chemisch afval (KCA).
- Geen draden in de contactdoos steken!
- Laadtoestel regelmatig controleren op schade.Bij schade mag het laadtoestel niet meer gebruikt worden tot het volledig hersteld is.

pila alcalina bloque de 9 Voltios o acumulador NiMH- de 9 Voltios
- Las pilas no recargables no pueden ser cargadas
- Las pilas recargables sólo pueden ser cargadas por un adulto
- Las pilas recargables deben ser extraídas del compartimiento de pilas antes de que sean cargadas.
- Las pilas deben ser colocadas con la polaridad correcta.
- Las pilas descargadas deben ser extraídas del juguete
- Los bornes de conexión no pueden ser puestos en cortocircuito.
- Retirar las baterías viejas, desechándolas en un depósito de basuras especiales.
- No introducir hilos en la toma de corriente!
- Comprobar con regularidad si el cargador presenta daños.En caso de presentar daños, el cargador no debe volver a ser utilizado hasta que esté completamente reparado.

Bateria alcalina de bloco de 9 V ou acumulador NiMH- de 9 V
- Pilhas não recarregáveis não devem ser novamente carregadas.
- Pilhas recarregáveis somente devem ser recarregadas por adultos.
- Pilhas recarregáveis devem ser retiradas do compartimento de pilhas antes de serem carregadas.
- As pilhas devem ser colocadas com a polaridade correta.
- As pilhas descarregadas devem ser retiradas do brinquedo.
- Os terminais de conexão não devem ser curto-circuitados.
- Eliminar as baterias esgotadas como desperdício perigoso
- Nunca introduzir fios na tomada!
- Verificar regularmente se o carregador apresenta danos.Em caso de dano, o carregador não deverá ser utilizado enquanto não estiver plenamente consertado.

1 batteria alcalina da 9 V o 1 batteria NiMH- ricaricabile da 9V
- Le batterie non ricaricabili non devono essere ricaricate
- Le batterie ricaricabili devono essere ricaricate da persone adulte
- Le batterie ricaricabili si devono estrarre dal supporto prima di ricaricarle.
- Le batterie si devono inserire rispettando la polarità.
- Togliere le batterie dal giocattolo quando sono scariche
- I morsetti di allacciamento non devono essere cortocircuitati.
- Smaltire le batterie usate negli appositi contenitori per la raccolta differenziata.
- Non inserire i fili nella presa elettrica.
- Controllare periodicamente se il caricabatterie presenta dei danni.In caso di danni, il caricabatterie non deve più essere utilizzato fino alla riparazione.

1 алкалиновая батарейка на 9 В или 1 никель-кадмиевый аккумулятор, 9 В
- Не пытайтесь заряжать неперезаряжаемые батарейки.
- Зарядку перезаряжаемых аккумуляторов разрешается выполнять только взрослым.
- Перед зарядкой перезаряжаемых аккумуляторов извлеките их из аккумуляторного отсека.
- При установке аккумуляторов на место соблюдайте полярность.
- Разряженные батарейки необходимо извлечь из игрушки.
- Не замыкайте накоротко соединительные клеммы.
- Использованные батареи утилизовать как спецотходы.
- Не вставляйте в розетку провода!
- Регулярно проверяйте зарядное устройство на отсутствие повреждений.При налиРии повреждений использовать зарядное устройство до выполнения его полного ремонта не разрешается.

1 个 9V 的碱性方电池或 1 个 9V 的 NiMH- 蓄电池
- 不得给非充电电池充电
- 只允许由成年人给充电电池充电
- 在充电前必须将充电电池从电池夹中取出。
- 必须按照正负极正确放入电池。
- 必须从玩具中取出没有电的电池
- 接线柱不允许被短路。
- 用完了的电池应作为特种垃圾处理。
- 禁止将金属丝插入插座！
- 经常检查充电器是否有损坏情况。如果充电器有损，直到完全修好为止不 可以再使用。

Sicherheitshinweise
Safety Information
Consignes de sécurité
Veiligheidsrichtlijnen
Indicaciones de seguridad
Observações sobre segurança
Informazioni per la sicurezza
Указания по технике безопасности
安全指南

- Alle elektrischen Bauteile (Motoren, Lampen) dürfen ausschließlich an Stromversorgungen von fischertechnik angeschlossen werden.
- No electrical components (motors, lamps) are to be connected to any other power supply than that provided by fischertechnik.
- Tous les composants électriques (moteurs, lampes) ne doivent être branchés aux alimentations électriques uniquement que par la société Fischertechnik.
- Alle elektrische componenten (motoren, lampen) mogen uitsluitend op stroomvoorzieningen van fischertechnik worden aangesloten.
- Todos los componentes eléctricos (motores, luces) deben conectarse a la alimentación de corriente de la técnica Fischer exclusivamente.
- Todas as peças componentes elétricas (motores, lâmpadas) só podem ser exclusivamente conectadas em abastecimentos de corrente da Fischertechnik.
- Tutti i componenti elettrici (motori, lampadine) devono essere collegati esclusivamente ad alimentatori fischertechnik.
- Все электрические детали (электромоторы, лампочки.) можно подключать только к источникам электропитания от fischertechnik.
- 只允许将所有电气部件 (传感器，电机，灯泡) 与慧鱼技术产品的电源装置相连接

- Achtung! Verletzungsgefahr an Bauteilen mit funktionsbedingten scharfen Kanten und Spitzen!
- Caution! Be careful not to hurt yourself on components with sharp or pointed edges!
- Attention! Risque de blessure sur les élements comportant des arêtes et o pointes vives indispensables au bon fonctionnement!
- Let op! U kunt zich bezeren aan bouwstenen met sherpe randen of punten!
- Attenzione! Esiste il pericolo di lesione con i pezzi di costruzione che hanno bordi e punte spigolosi necessari per la funzionalita del pezzo!
- Atenção! Perigo de ferimentos em peças componentes com cantos vivos e pontas obrigatórios para o funcionamento !
- Attenzione! Pericolo di lesioni dovute a componenti con spigoli vivi e punte per motivi funzionali!
- Будьте осторожны! Об острые края деталей и и наконечники можно порезаться!
- 注意！
因功能需要而带有锋利的棱边和尖角的部件可能会带来受伤危险！

- Alle Einzelteile, insbesondere bewegliche Teile sind falls notwendig zu warten und zu reinigen.
- All components, especially moving parts, should be maintained and cleaned as necessary.
- Toutes les pièces détachées et en particulier les pièces mobiles, sont, si nécessaire, à entretenir et à nettoyer.
- Alle onderdelen, vooral de bewegende delen, kunnen, indien noodzakelijk, onderhouden en gereinigd worden.
- Es necesario limpiar y mantener en buen estado todas las diferentes piezas - especialmente las piezas móviles.
- Caso necessário, todas as peças individuais, especialmente peças móveis, tem que ser submetidas à manutenção e ser limpadas.
- Se necessario, tutti i singoli componenti, soprattutto le parti mobili, si devono eventualmente sottoporre a manutenzione e pulizia.
- Все детали, особенно подвижные, требуют ухода и чистки.
- 必要时应保养和清洁所有零件，尤指运动部件。

- Hinweise zum Umweltschutz
Die elektrischen und elektronischen Bauteile dieses Baukastens (z. B. Motoren, Lampen, Sensoren) gehören nicht in den Hausmüll. Sie müssen am Ende ihrer Lebensdauer an einem Sammelpunkt für das Recycling von elektrischen und elektronischen Geräten abgegeben werden.
Das Symbol auf dem Produkt, der Verpackung oder der Anleitung weist darauf hin.

- Instructions for Environmental Protection
Do not put the electrical and electronic components of this construction kit such as motors, lights and sensors in the household waste. At the end of their service life, take them to a collection point for the recycling of electrical and electronic devices. The symbol on the product, packaging or the instructions shows this.

- Remarques de protection de l'environnement
Les composantes électriques et électroniques de ce coffret (par ex. moteurs, lampes, capteurs) ne doivent pas être jetées avec les ordures ménagères. Lorsqu'elles ne sont plus utilisables, il faut les remettre auprès d'un centre de collecte spécialisé dans le recyclage des appareils électriques et électroniques. Le symbole sur le produit, l'emballage ou la notice d'instructions le signale.

- Bescherming van het milieu
De elektrische en elektronische onderdelen van deze module (bijv. motoren, lampen, sensoren) behoren niet bij het huisvuil.Aan het einde van hun levensduur moeten ze worden ingeleverd bij een verzamelplaats voor de recycling van elektrische en elektronische apparaten.Het symbool op het product, de verpakking of de gebruiksaanwijzing wijst je daar ook op.

- Notas con respecto a la protección del medio ambiente
Los componentes eléctricos y electrónicos de esta unidad modular (p. ej. motores, lámparas, sensores) no han de tirarse a la basura casera. Al final de su vida útil tienen que ser entregados en un puesto colector para el reciclaje de aparatos eléctricos y electrónicos. El símbolo sobre el producto, el embalaje o las instrucciones lo señala.

- Instruções para a proteção do meio ambiente
Os componentes elétricos e eletrônicos deste módulo (p.ex. motores, lâmpadas, sensores) não pertencem ao lixo doméstico. Eles devem ser entregues, no final da sua vida útil, num posto de coleta para a reciclagem de aparelhos elétricos e eletrônicos. O símbolo no produto, na embalagem ou no manual indica isto.

- Indicazioni sulla tutela ambientale
I componenti elettrici ed elettronici di questa scatola di montaggio (ad es. motori, lampadine, sensori) non vanno smaltiti tra i rifiuti domestici. Alla fine della loro durata di utilizzo devono essere consegnati a un centro di raccolta adibito al riciclaggio di apparecchi elettrici ed elettronici.
Ciò viene indicato dal simbolo che si trova sul prodotto, sull'imballo o sul manuale d'istruzioni.

- Указания по охране окружающей среды
Электрические и электронные детали этого комплекта (датчики, электромоторы, лампочки и др.) нельзя выбрасывать с бытовым мусором. После того как они
отслужат свой срок, их нужно сдать для переработки на сборный пункт электрических и электронных приборов.
На это указывает знак на изделии, на упаковке или на инструкции.

- 有关环保的提示
不得将本组件中的电气和电子部件 (如电机，灯炮，
传感器) 当作家庭垃圾扔掉。
等它们的使用寿命结束后，应将它们送抵电气和电子器材回收站。
产品、包装或说明书上的标记也说明这一规定。

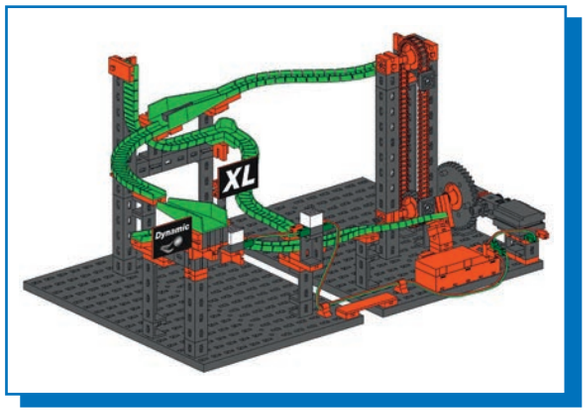

Kettenförderer
Chain conveyor
Transporteur à chaîne
Kettingtransporteur
Transportador de cadena
Transportadora de corrente
Convogliatore a catena
Цепной транспортёр
链式输送机

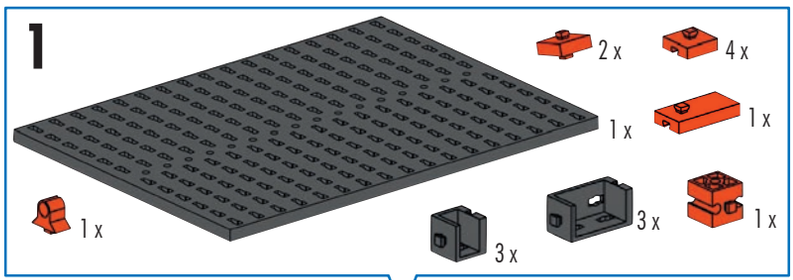

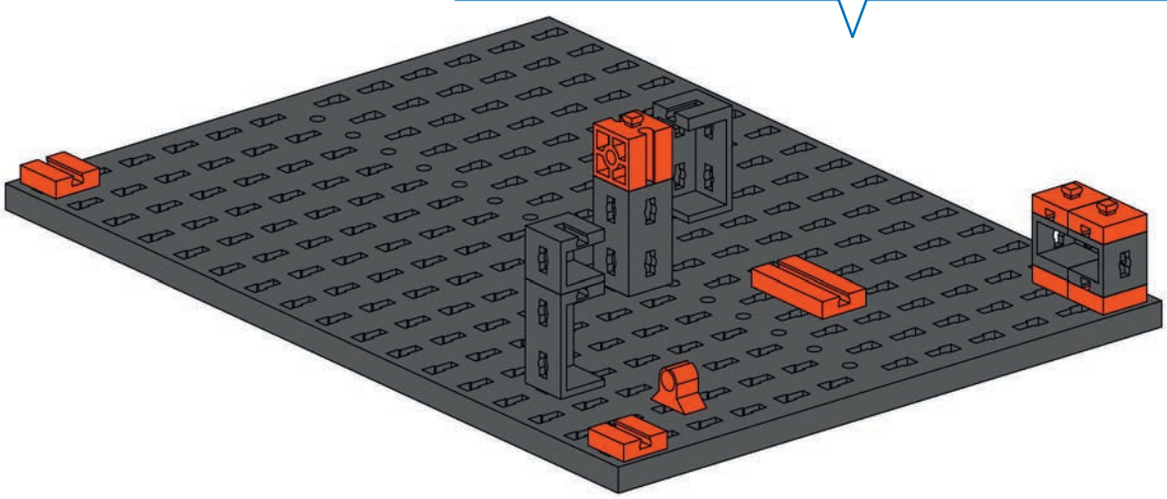

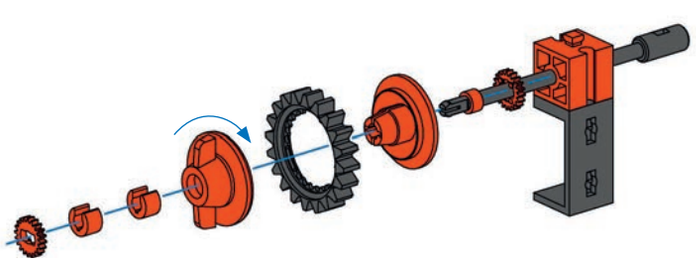

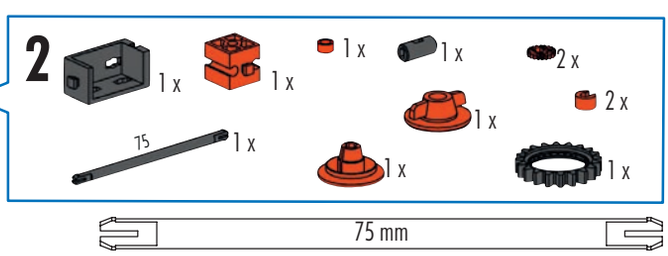

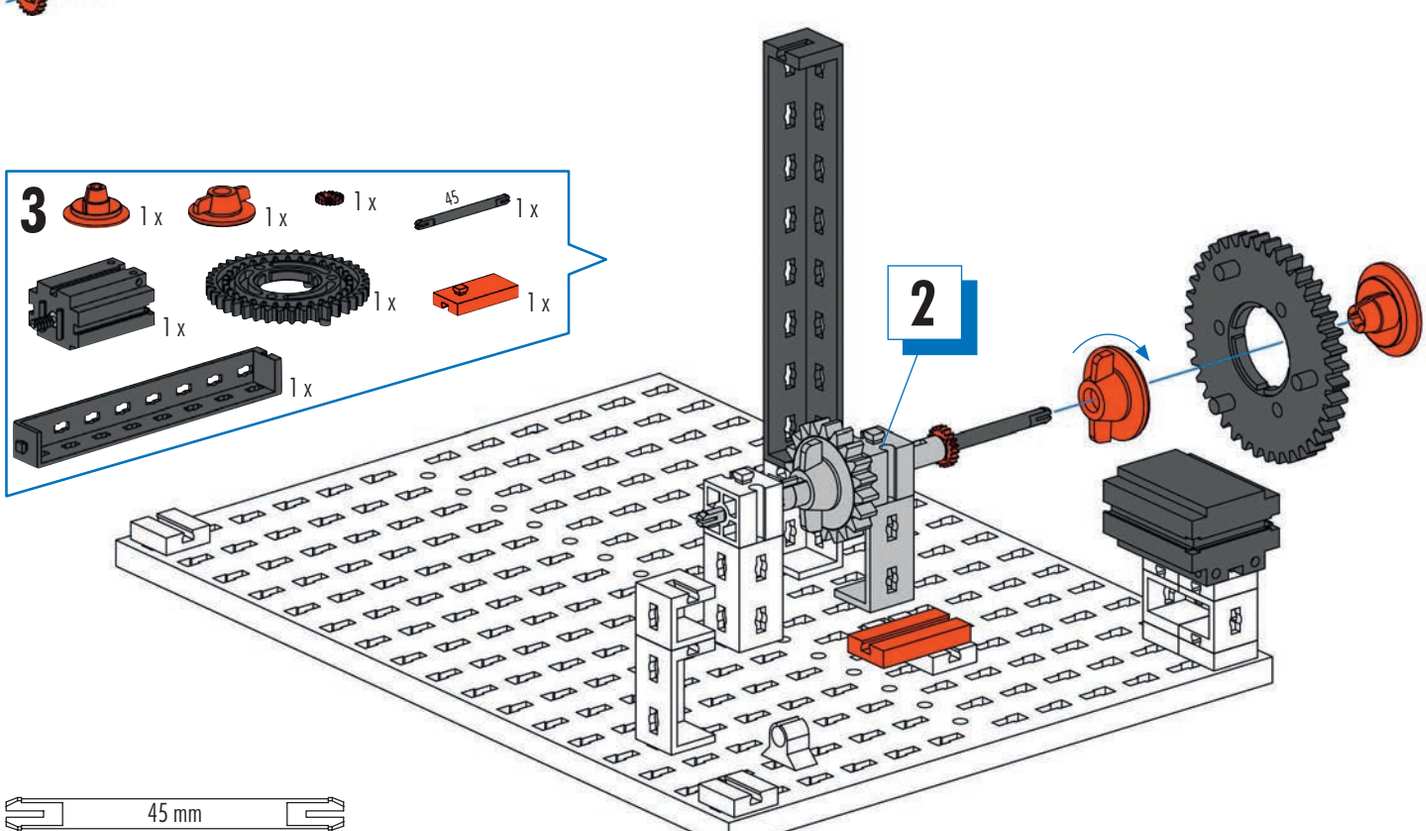

631

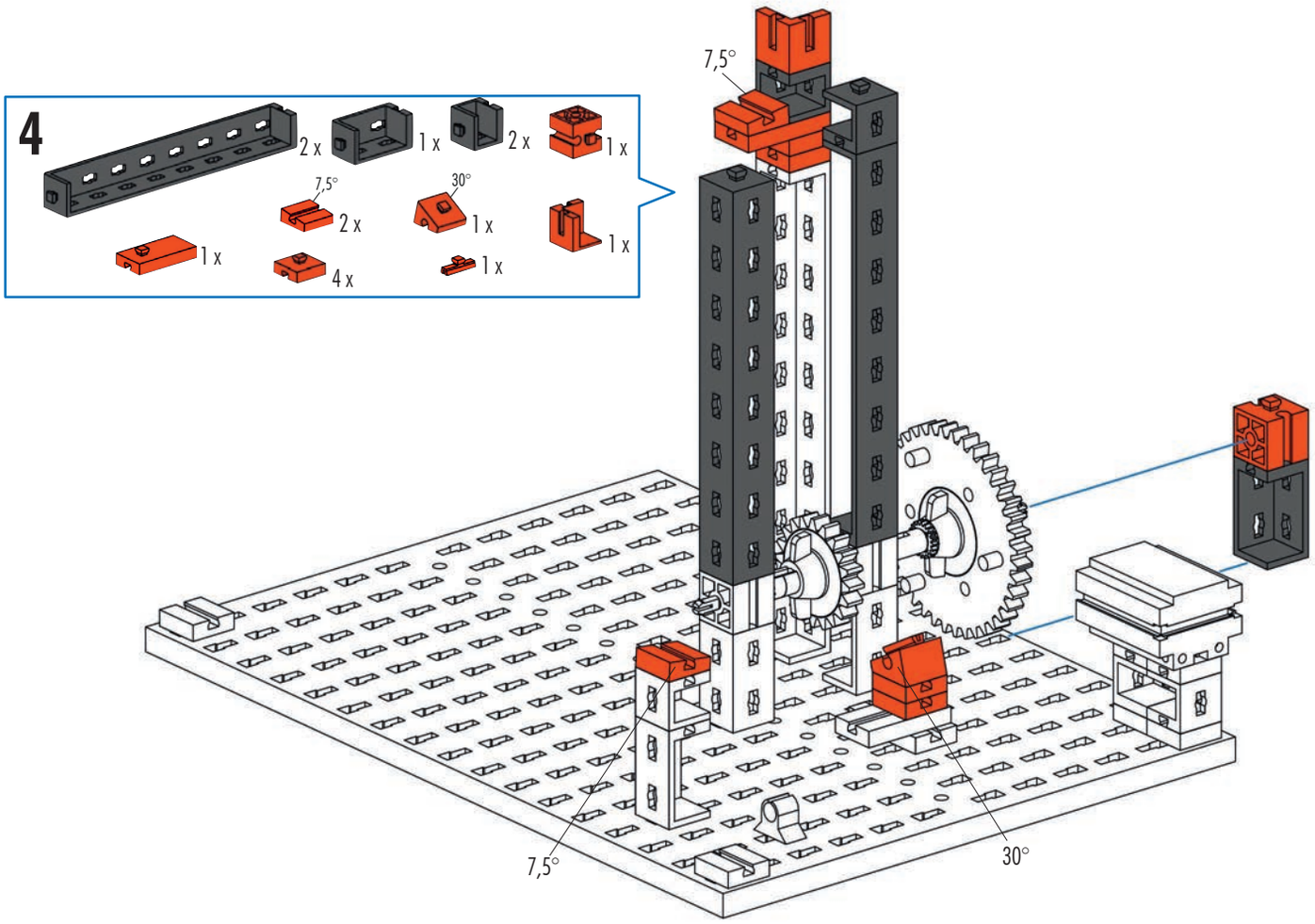
4
2 x
1 x
2 x
1 x
7,5°
2 x
30°
1 x
1 x
1 x
4 x
1 x
7,5°
30°
7,5°

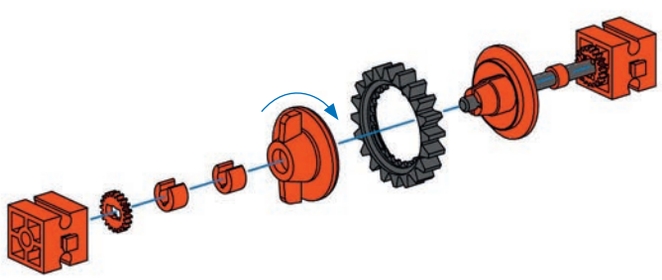

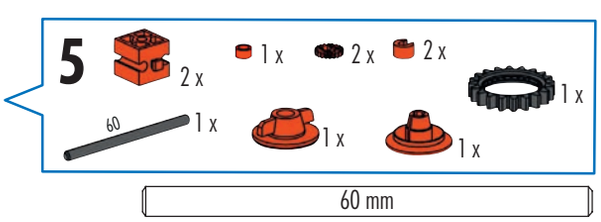
5
2 x
1 x
2 x
2 x
1 x
60
1 x
1 x
1 x
60 mm

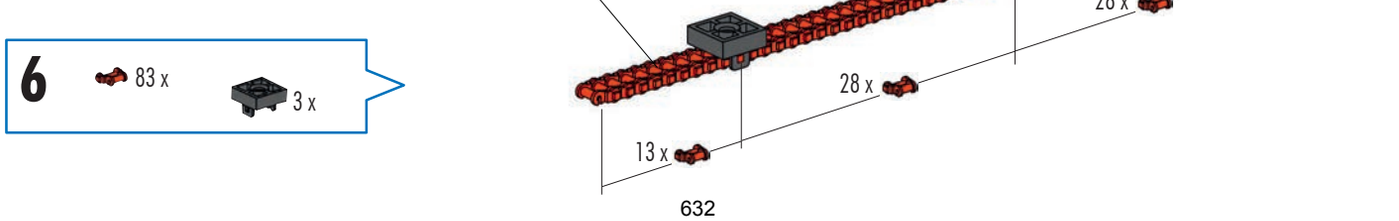
6
83 x
3 x
83 x
28 x
28 x
13 x

632

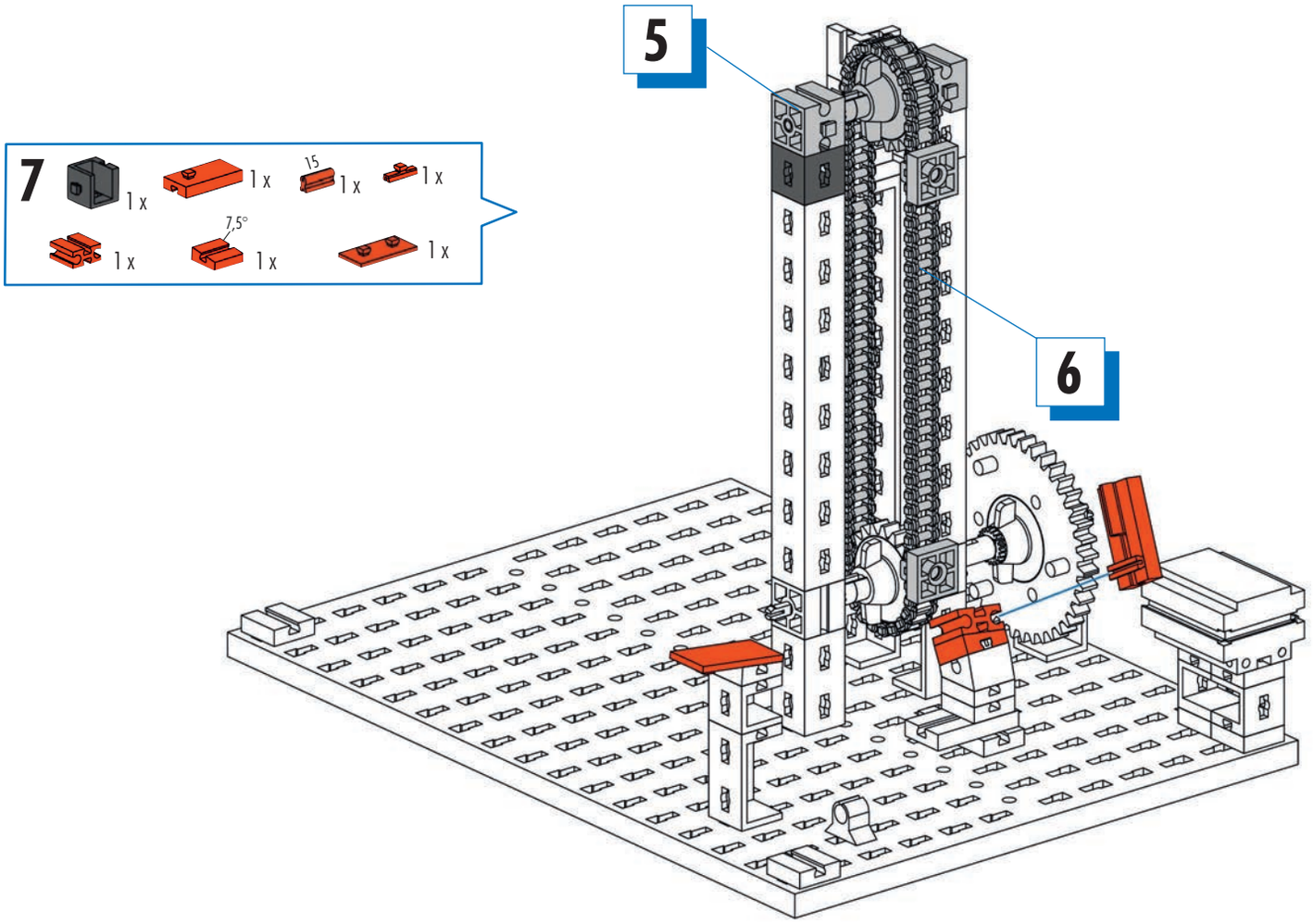

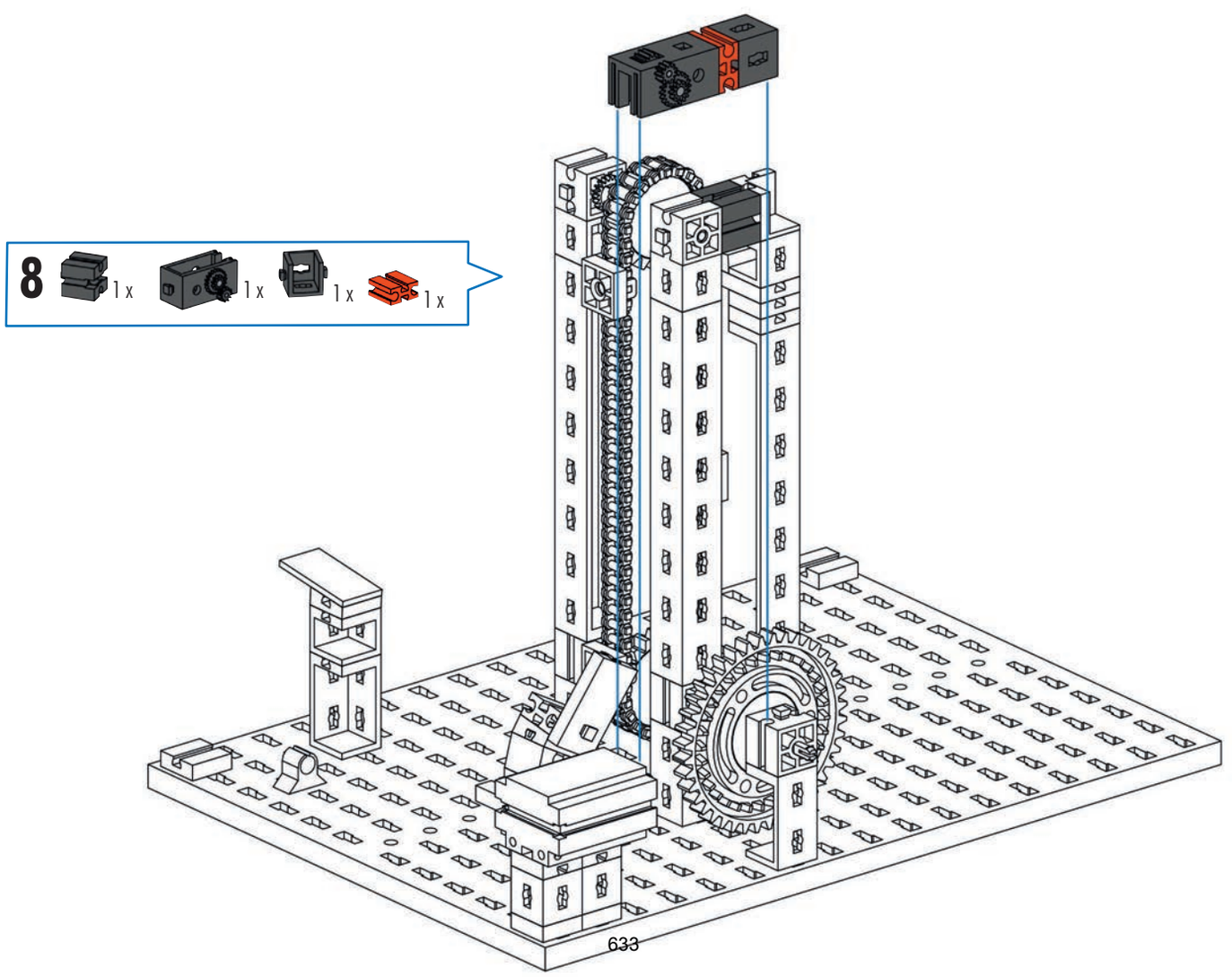

633

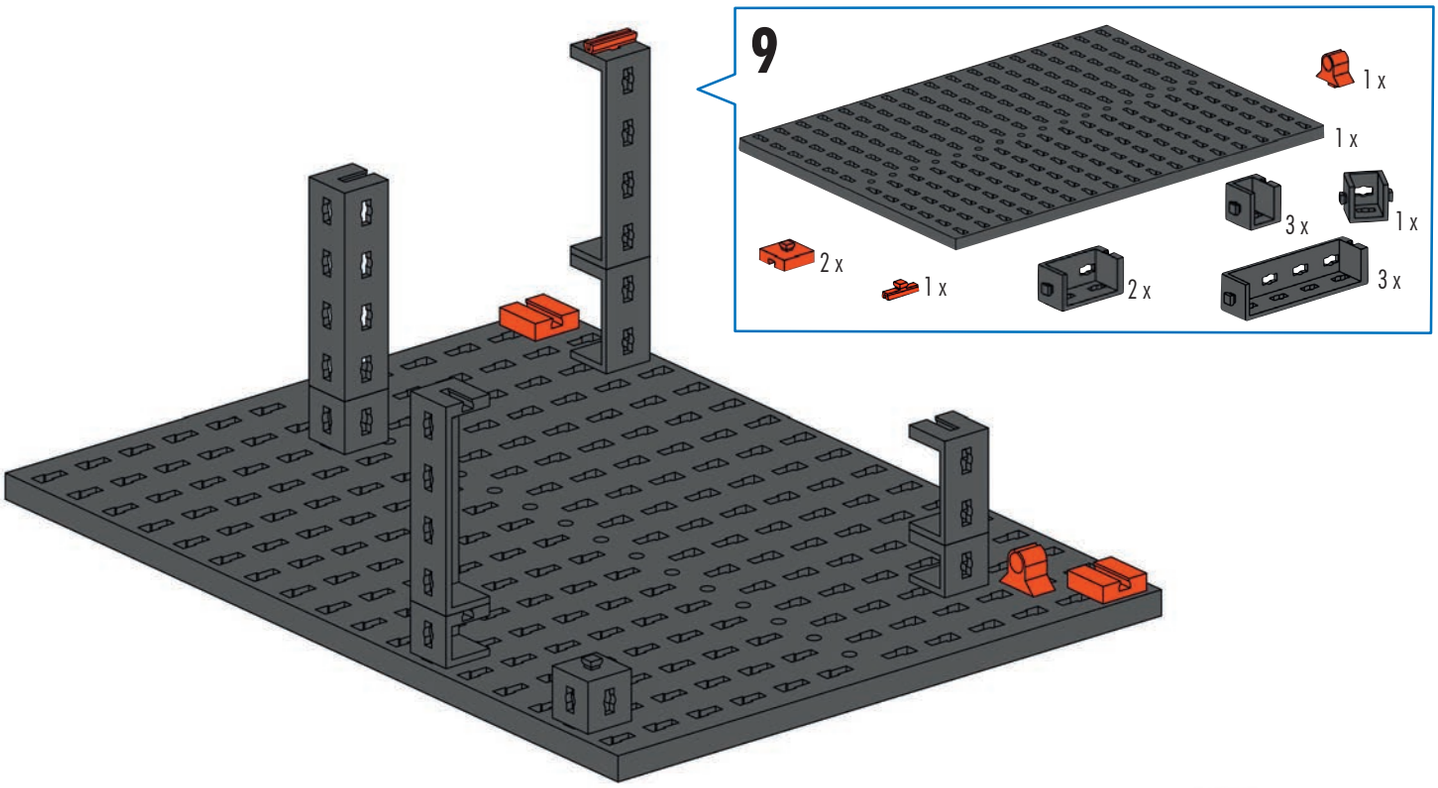
9
1 x
1 x
3 x
1 x
2 x
1 x
2 x
3 x

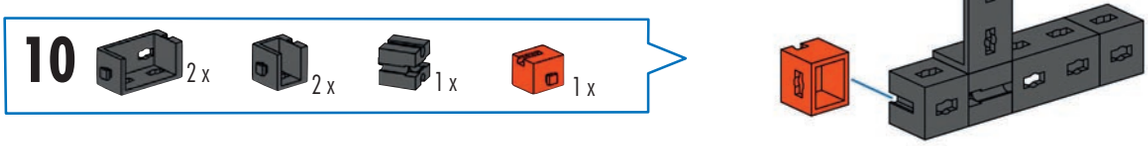
10
2 x
2 x
1 x
1 x

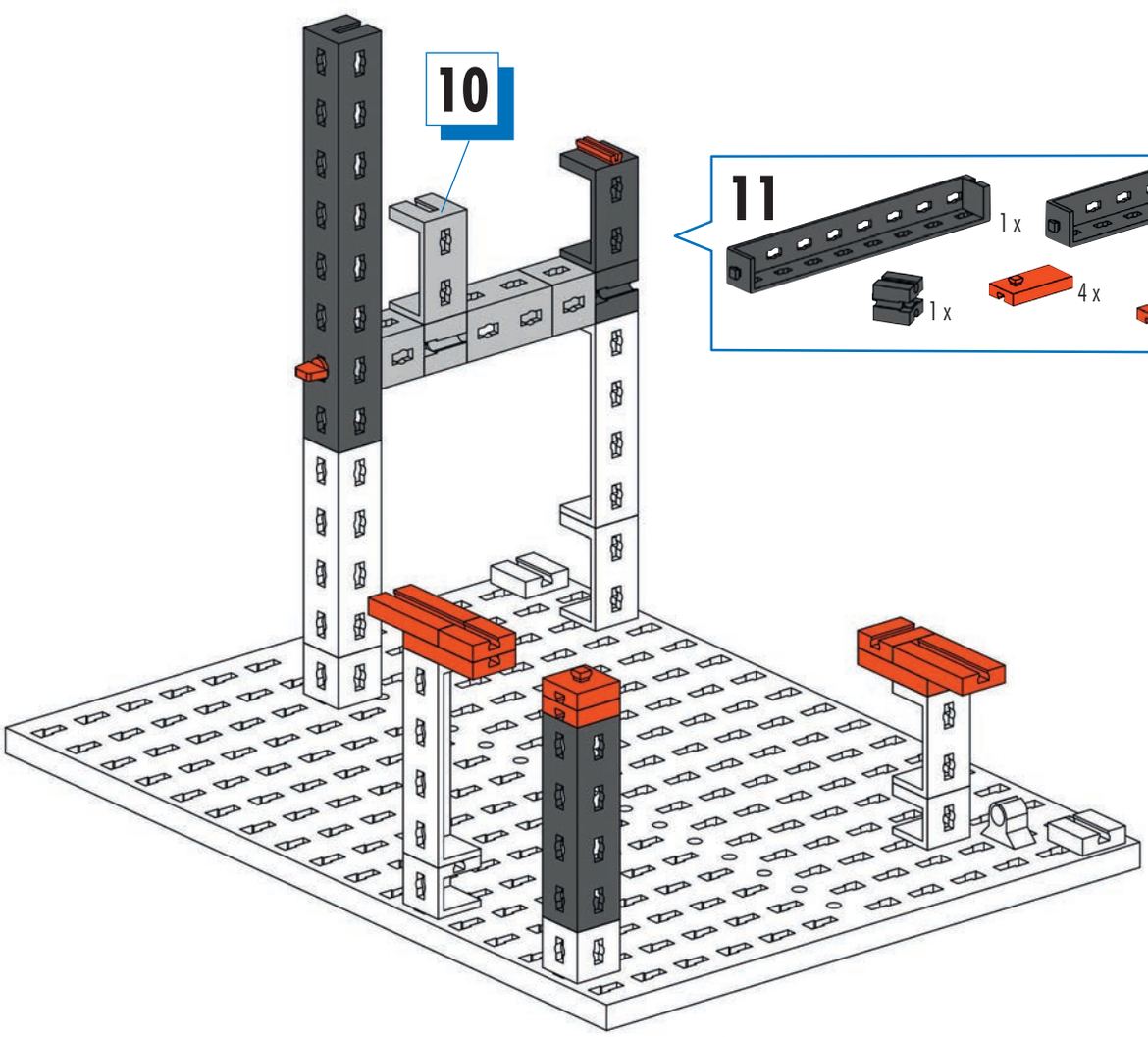
10

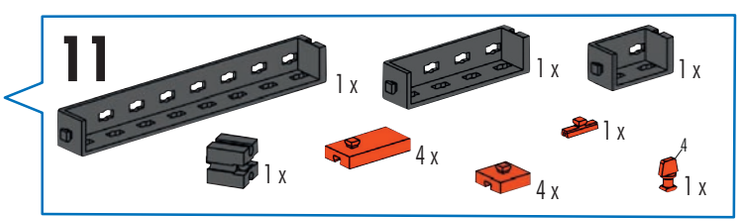
11
1 x
1 x
1 x
1 x
1 x
4 x
4 x
4
1 x

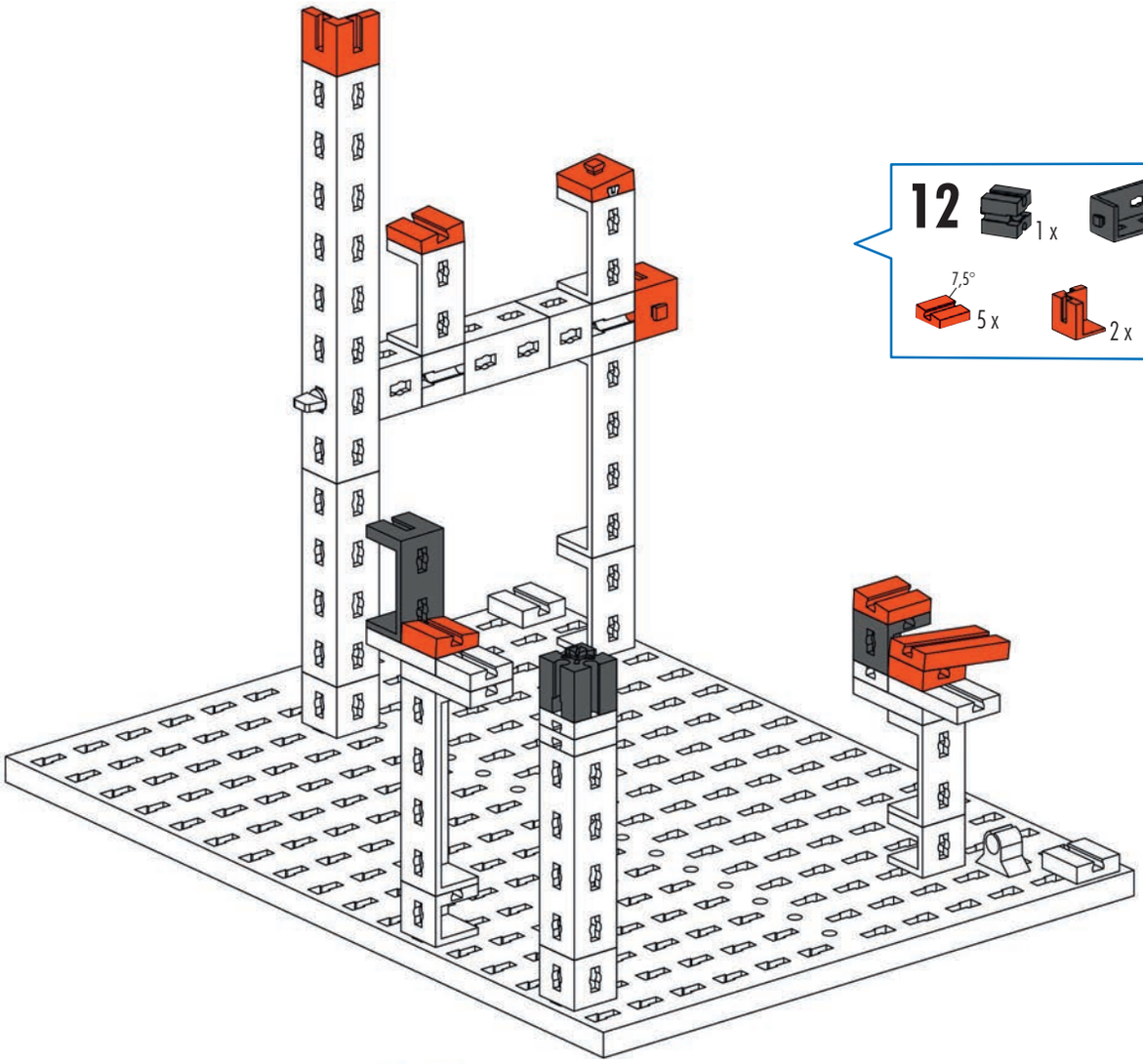

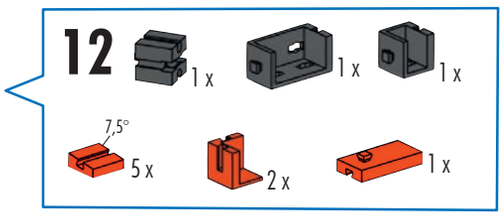
12
1 x
1 x
1 x
7,5°
5 x
2 x
1 x

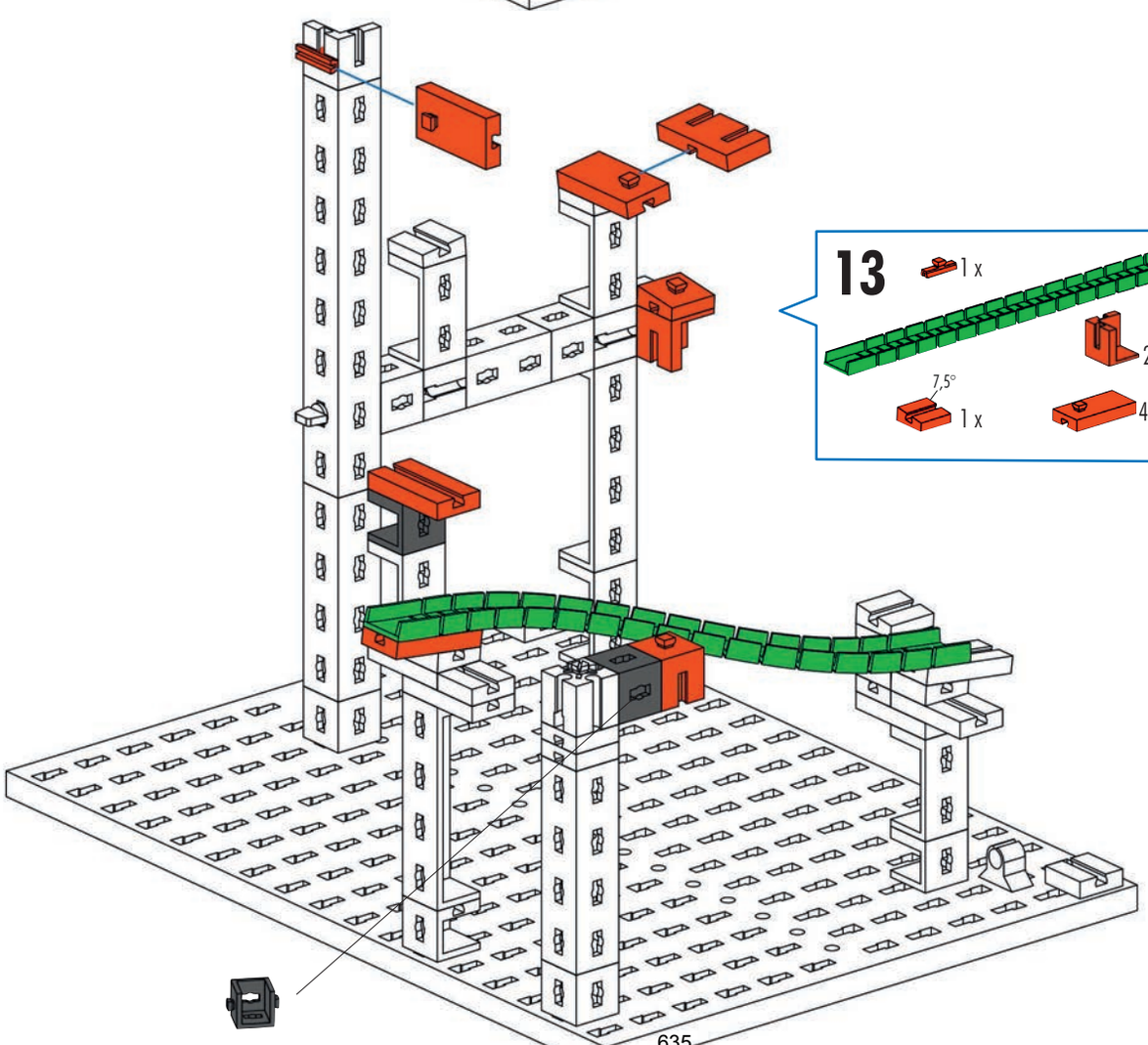
635

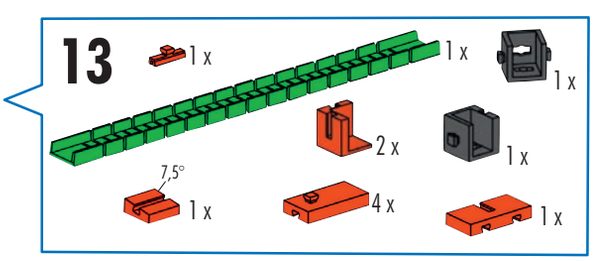
13
1 x
1 x
1 x
2 x
1 x
7,5°
1 x
4 x
1 x

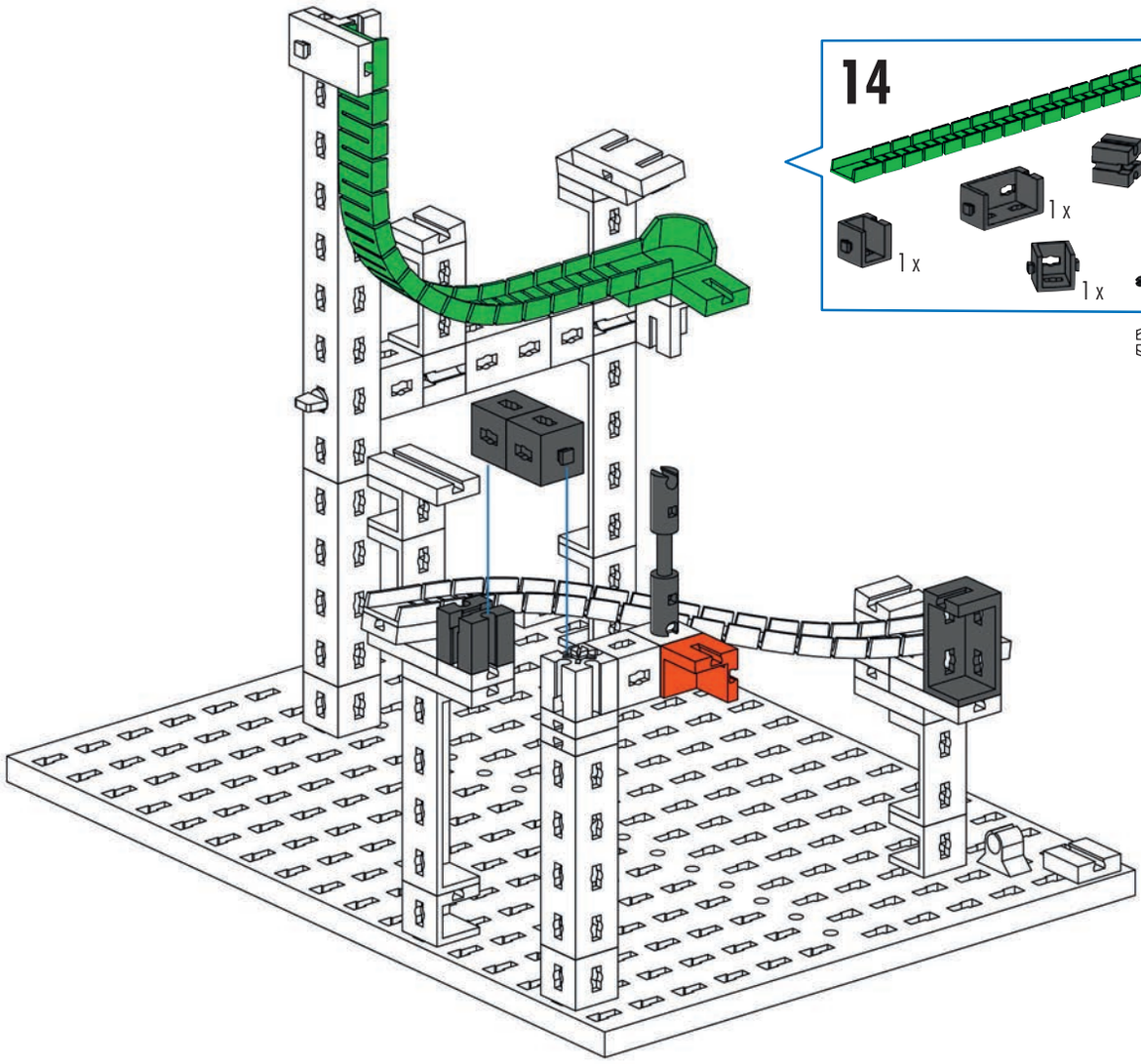

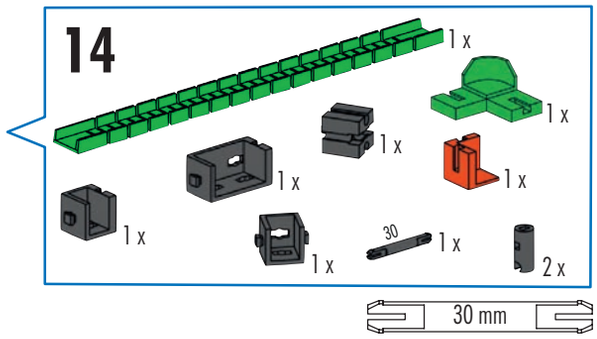
14
1 x
1 x
1 x
1 x
1 x
1 x
30
1 x
2 x
30 mm

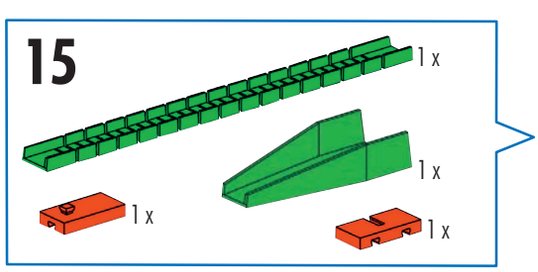
15
1 x
1 x
1 x
1 x

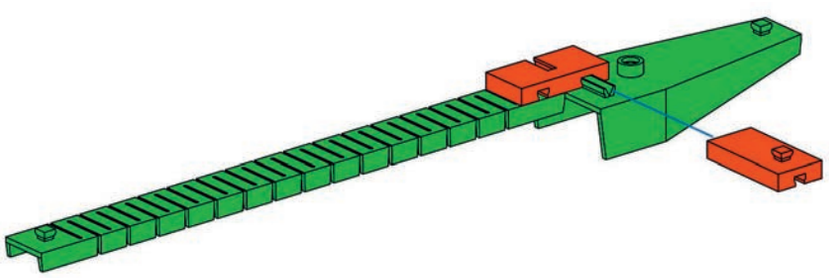

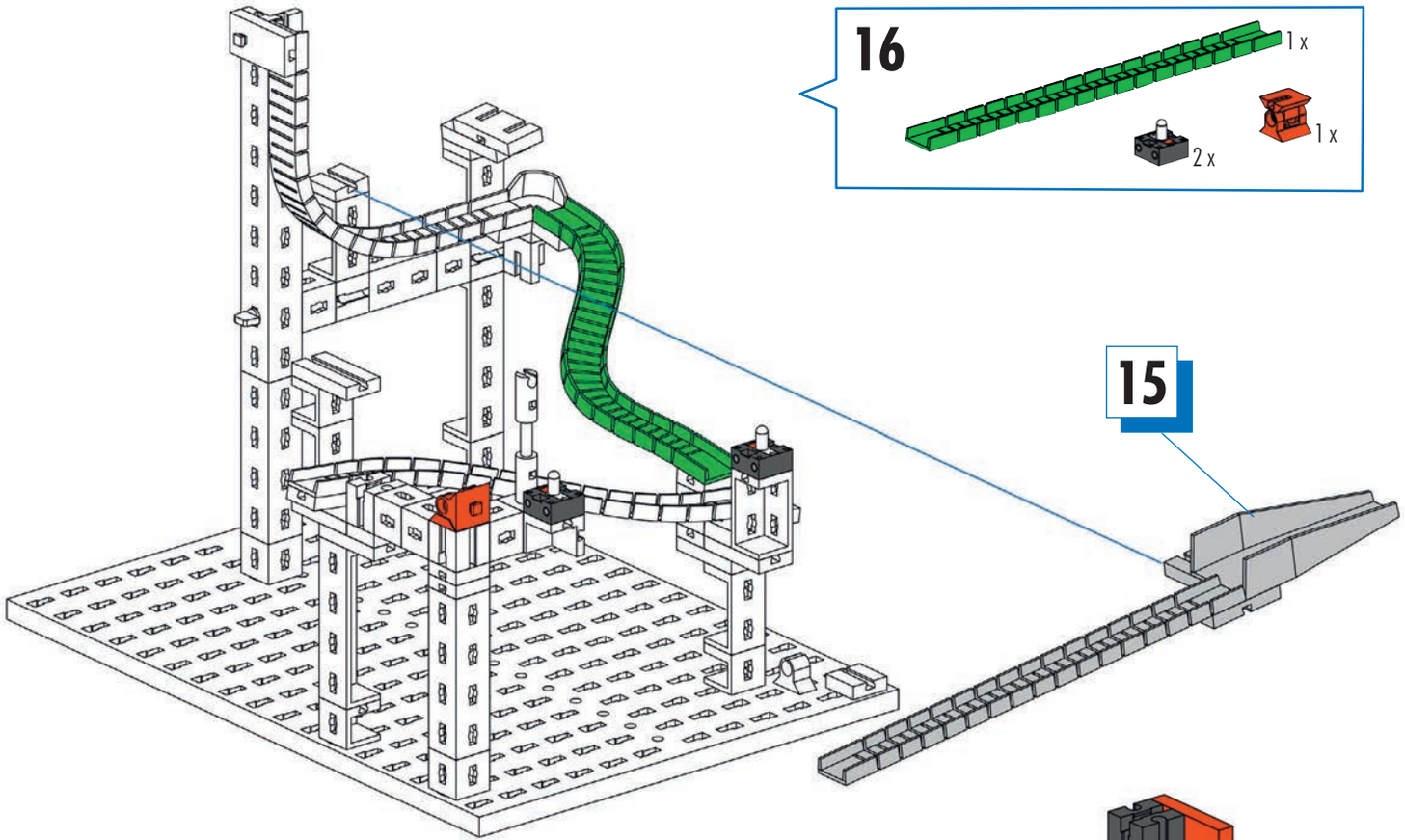
16
1 x
1 x
2 x
15

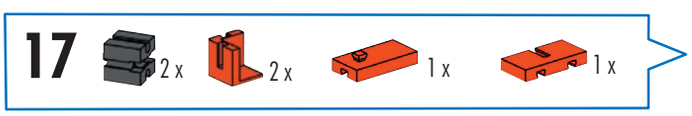
17
2 x
2 x
1 x
1 x

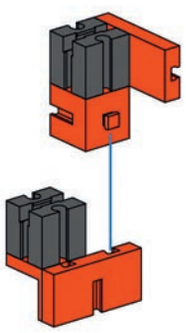

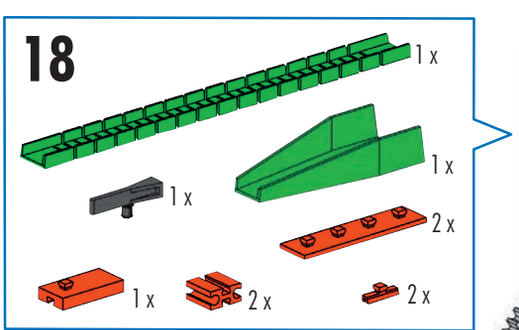
18
1 x
1 x
1 x
2 x
1 x
2 x
2 x

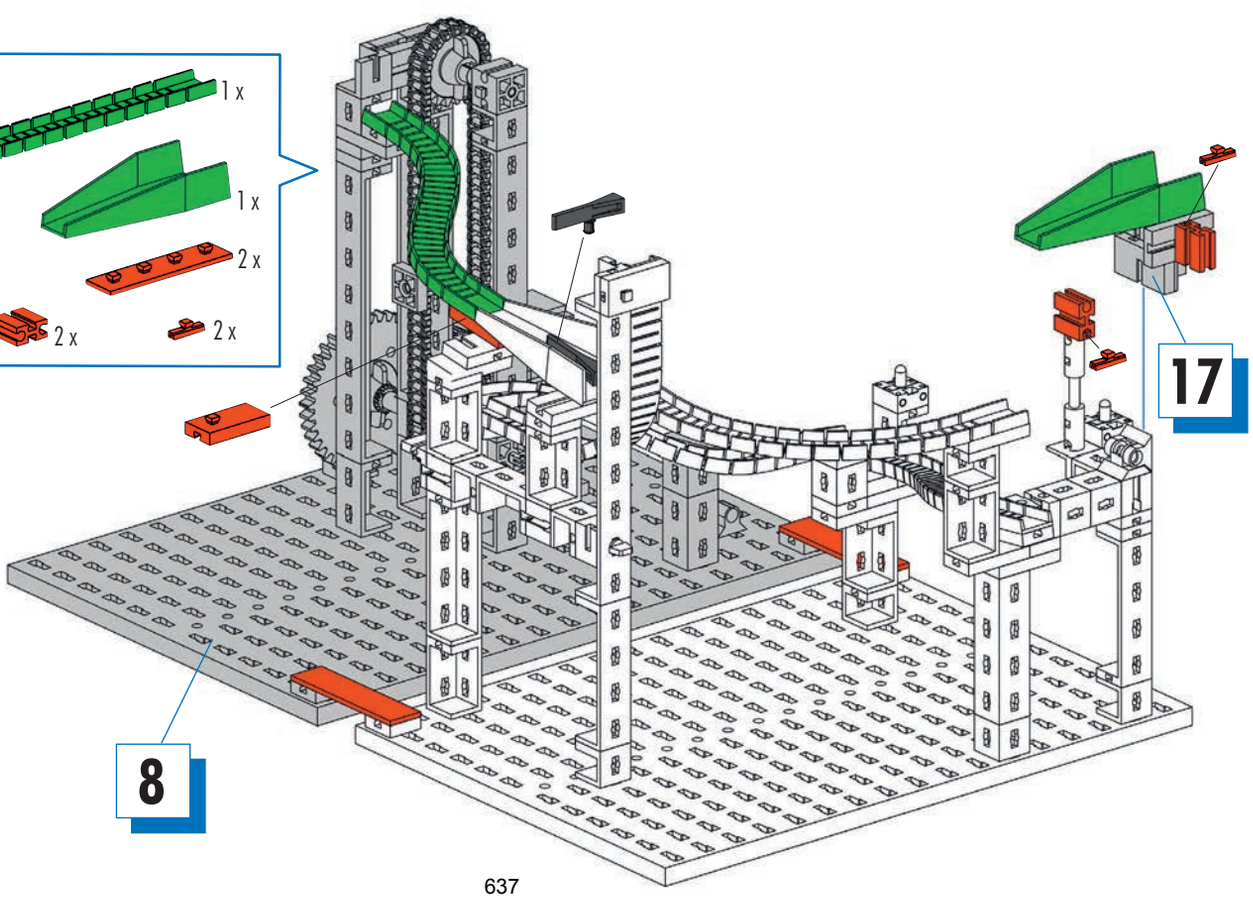
17
8

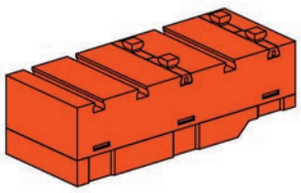

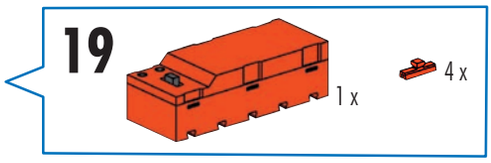
19
1 x
4 x

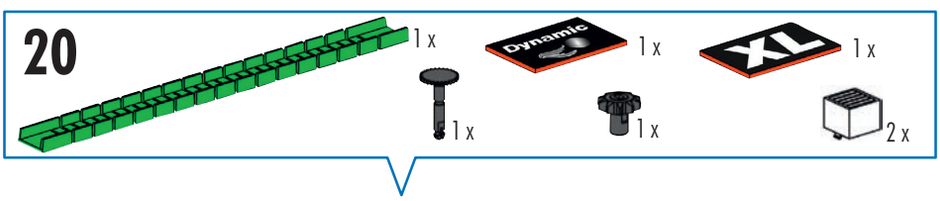
20
1 x
1 x
Dynamic
1 x
1 x
XL
1 x
2 x

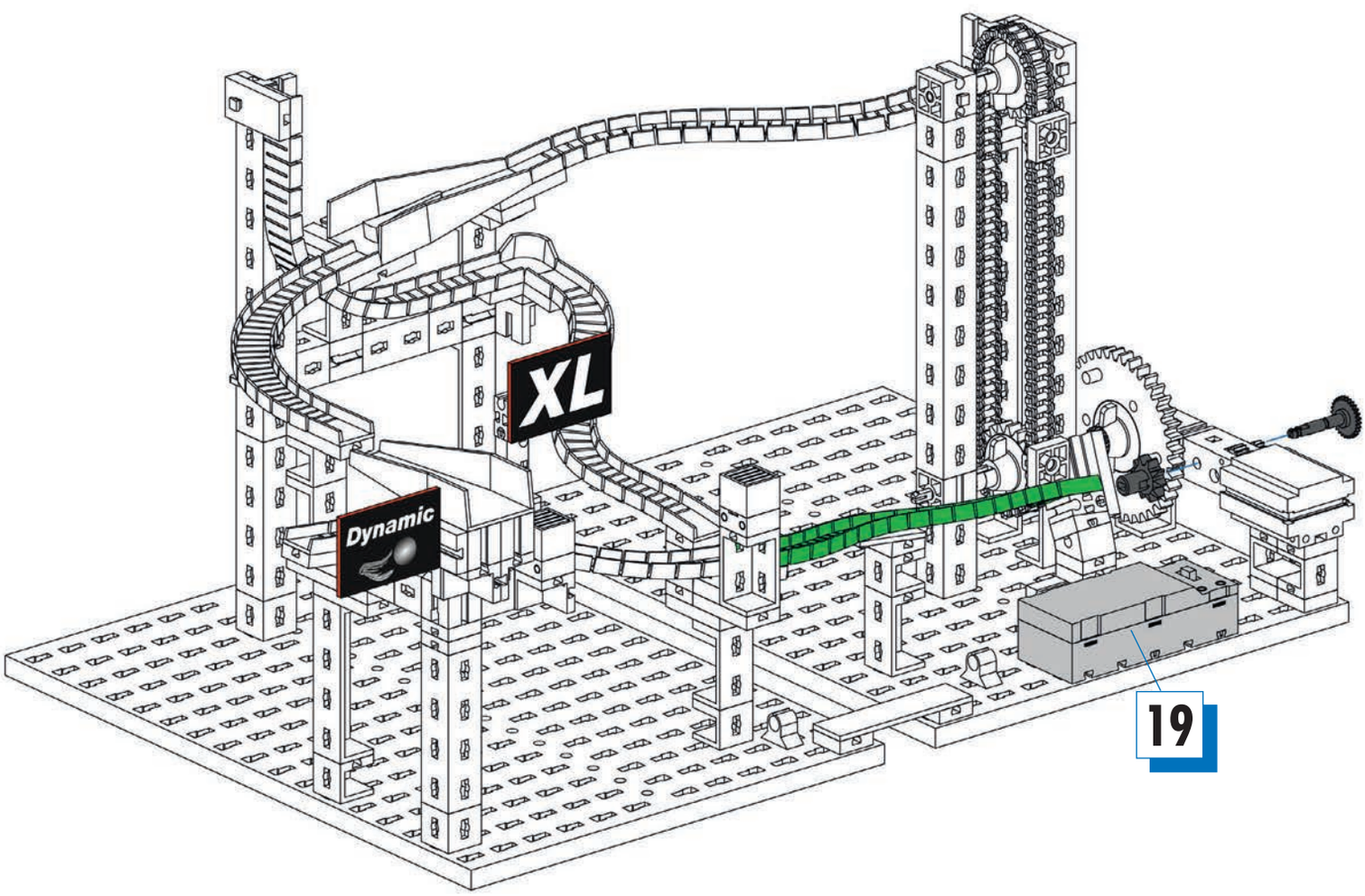
XL
Dynamic
19

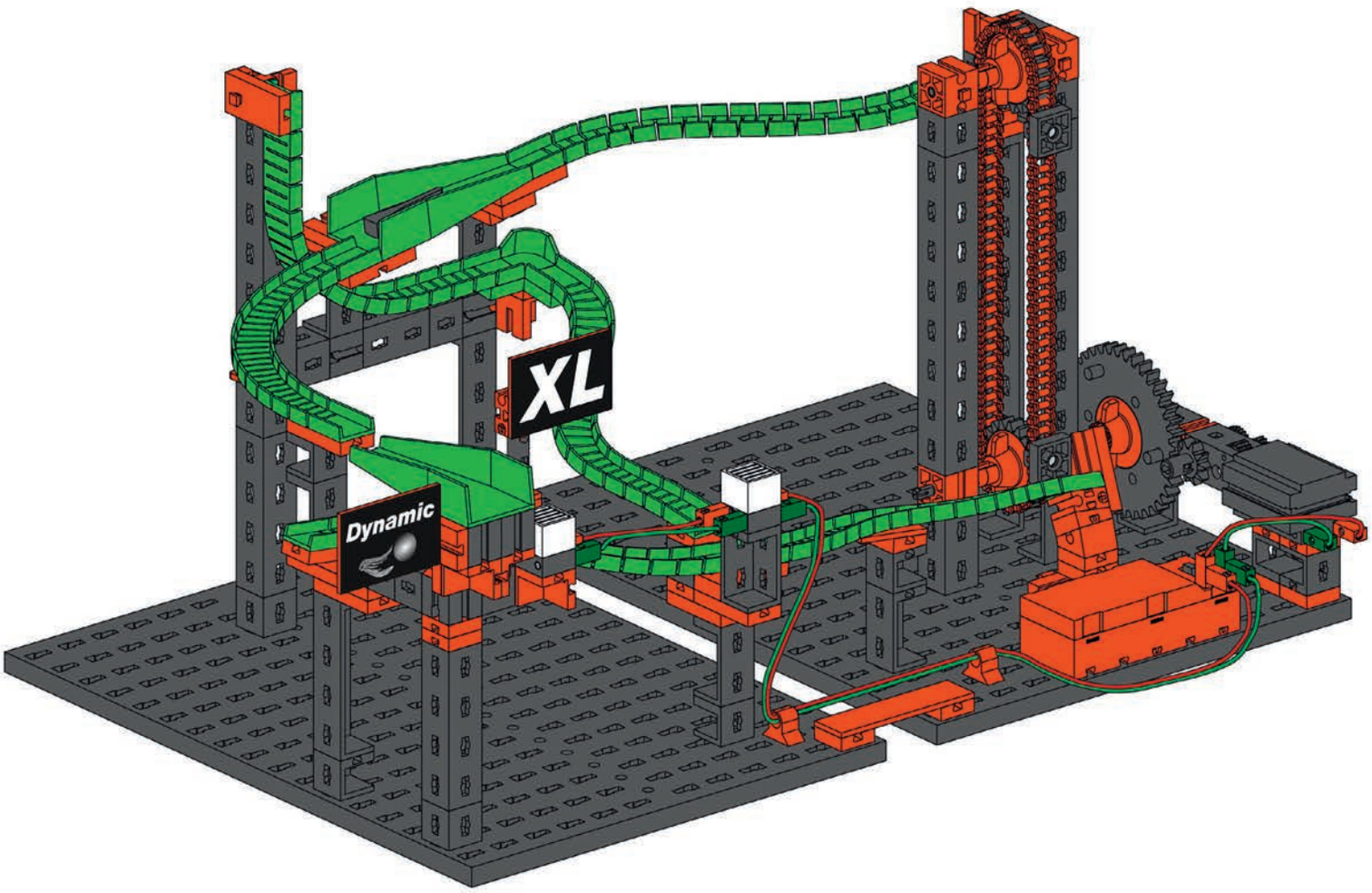

Schaltplan
Circuit diagram
Plan électrique

Schakelschema
Diagrama de circuitos
Plano elétrico de ligação

Schema elettrico
Схема подключения
电路图

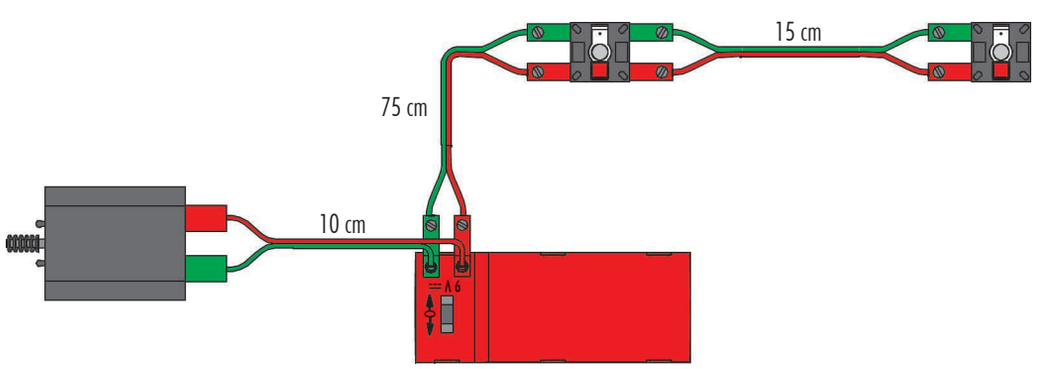

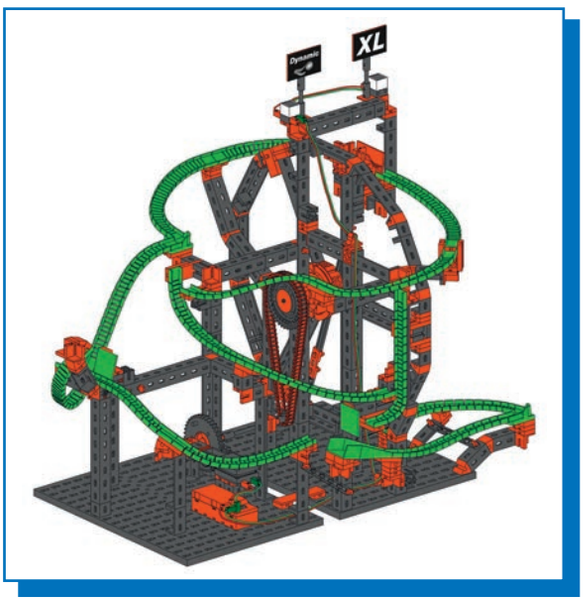

Radförderer
Wheel conveyor
Transporteur à roue
Wieltransporteur
Transportador de ruedas
Transportadora de roda
Convogliatore a ruota
Роторный транспортёр
斗轮输送机

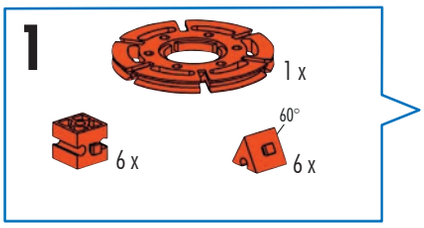

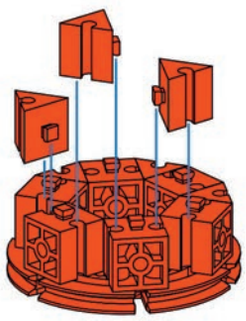

3 x

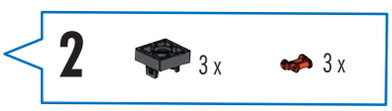

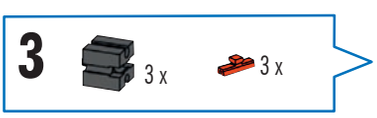

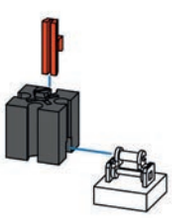

3 x

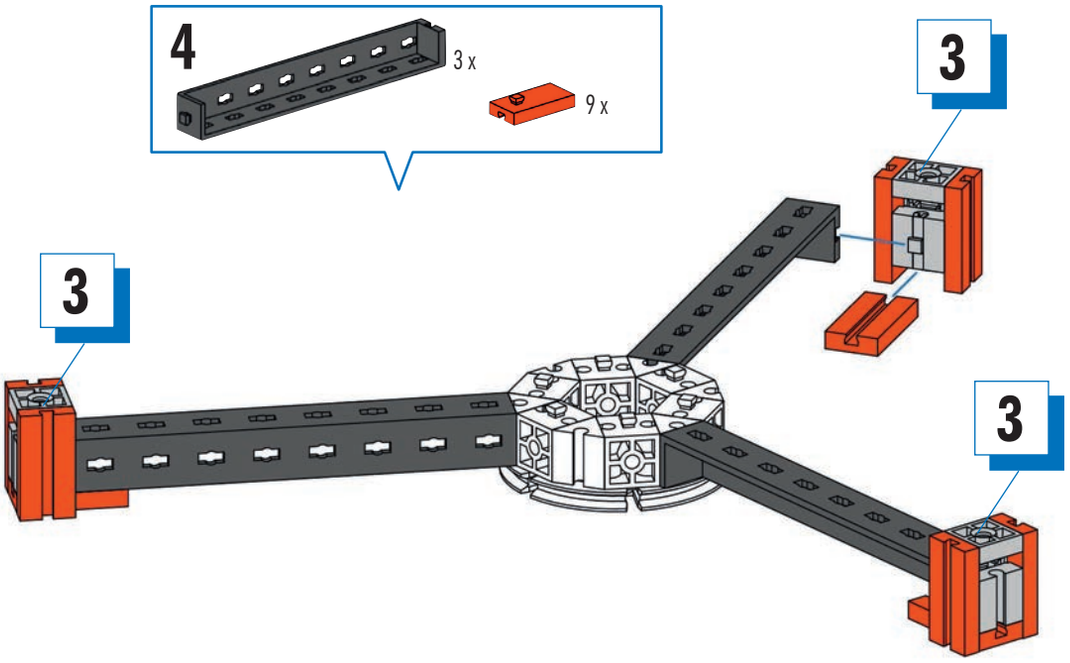

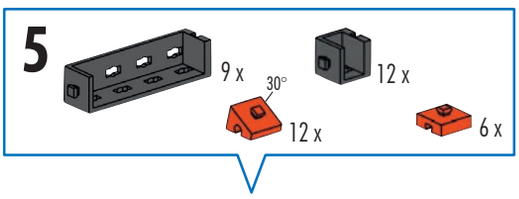

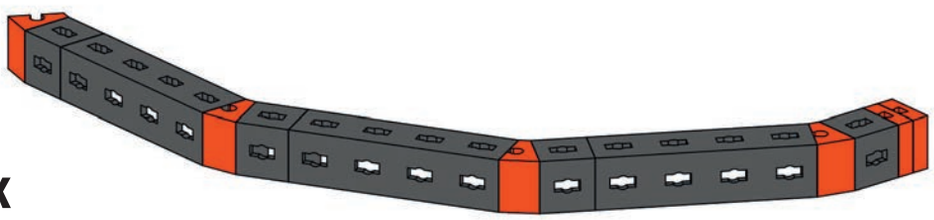

3 x

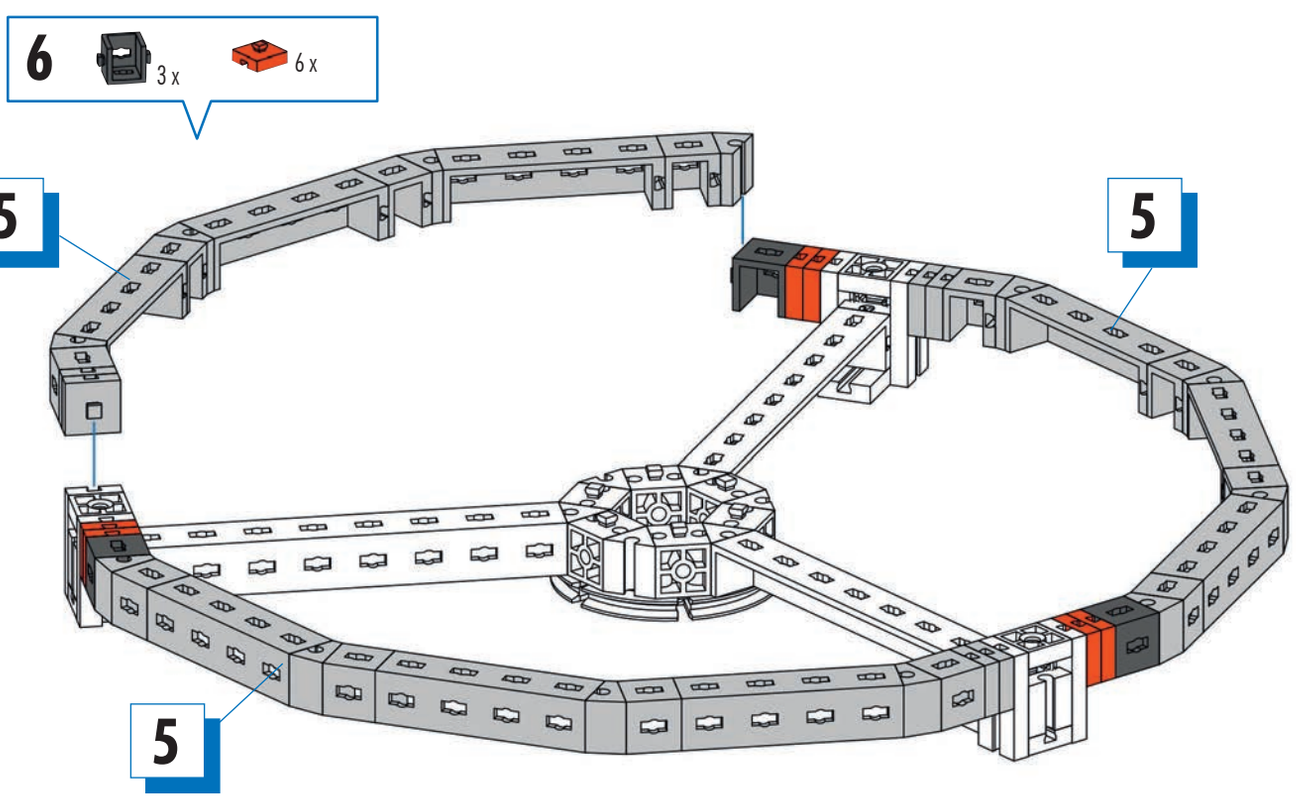

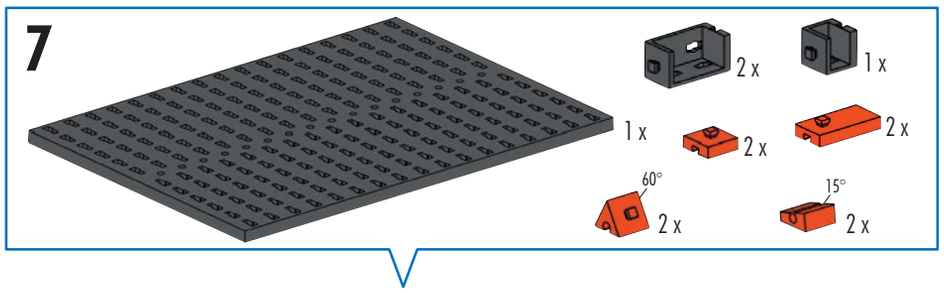

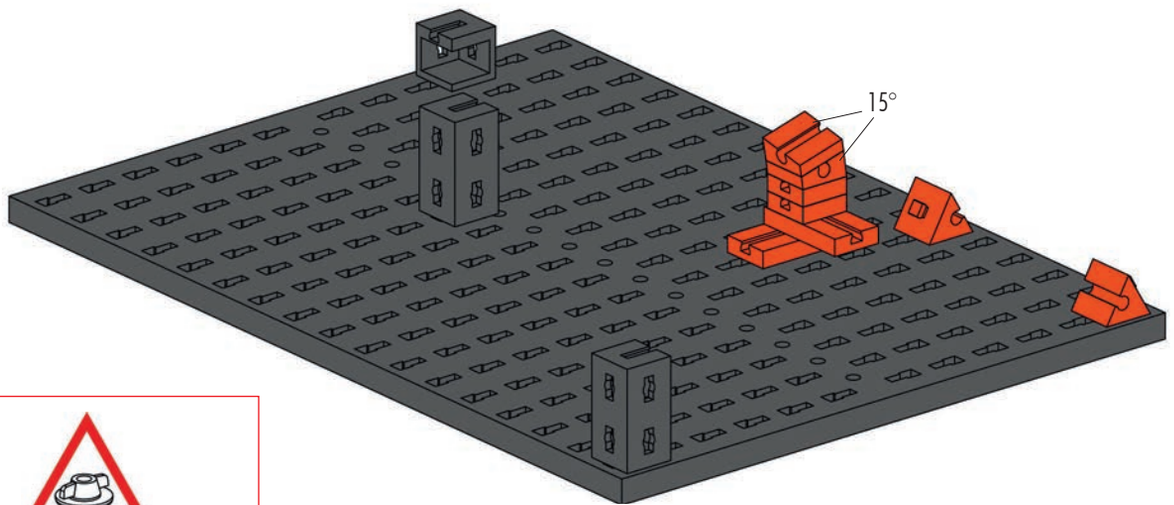

- Nabenmuttern festdrehen
- Fasten the hub nuts home
- Serrer les écrous de moyeu
- Draal de naafmoeren vast
- Atornillar las tuercas laterales
- Apertar bem as porcas de cubo
- Stringere i dadi dei mozzi
- Затянуть гайки ступиц
- 拧紧

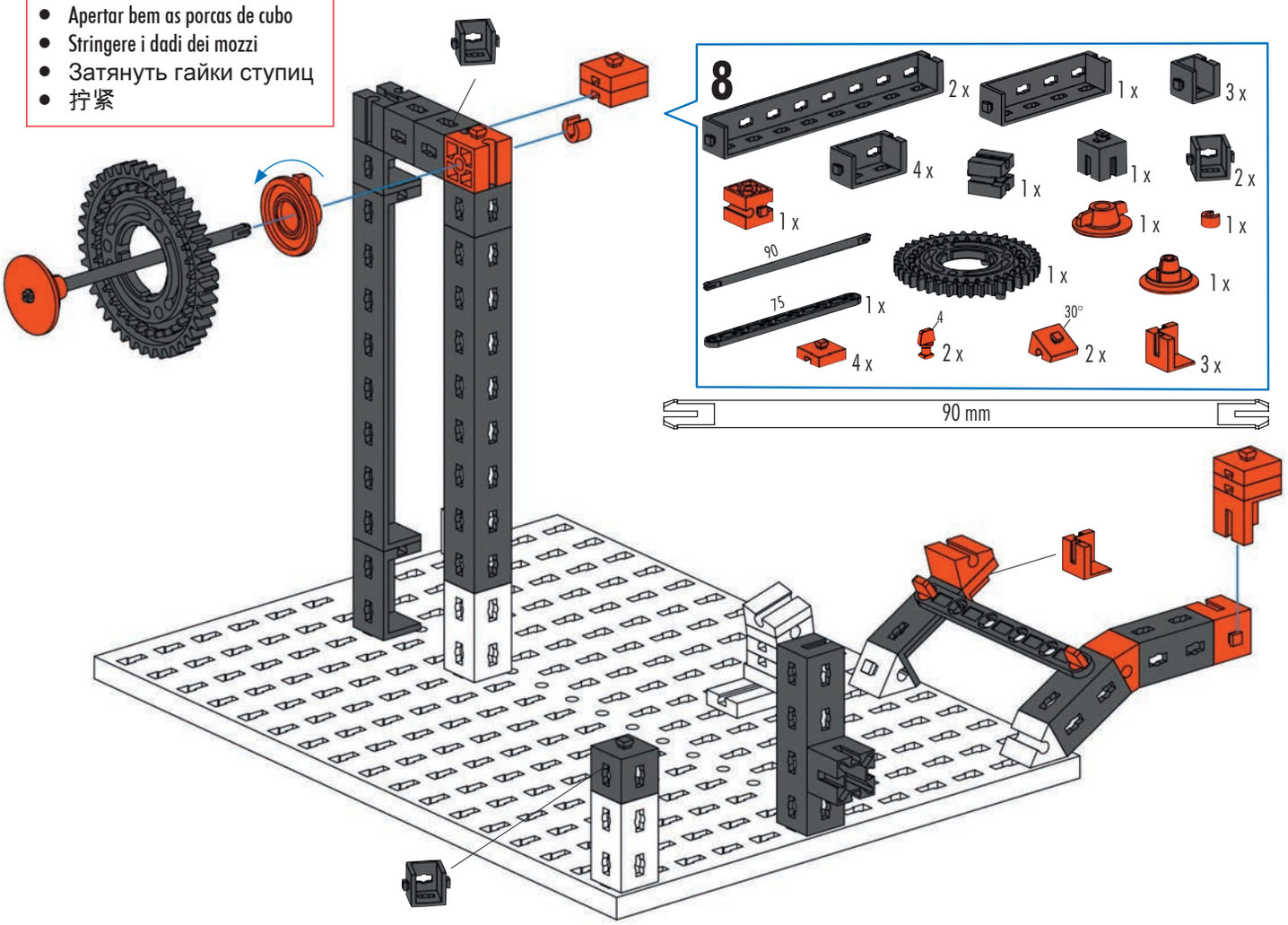

642

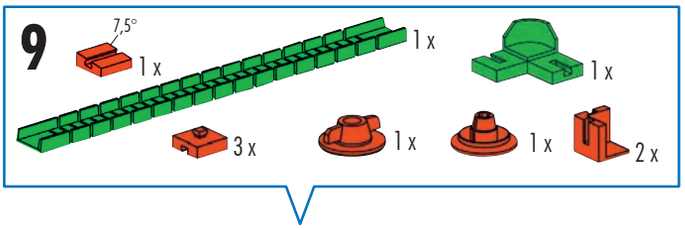

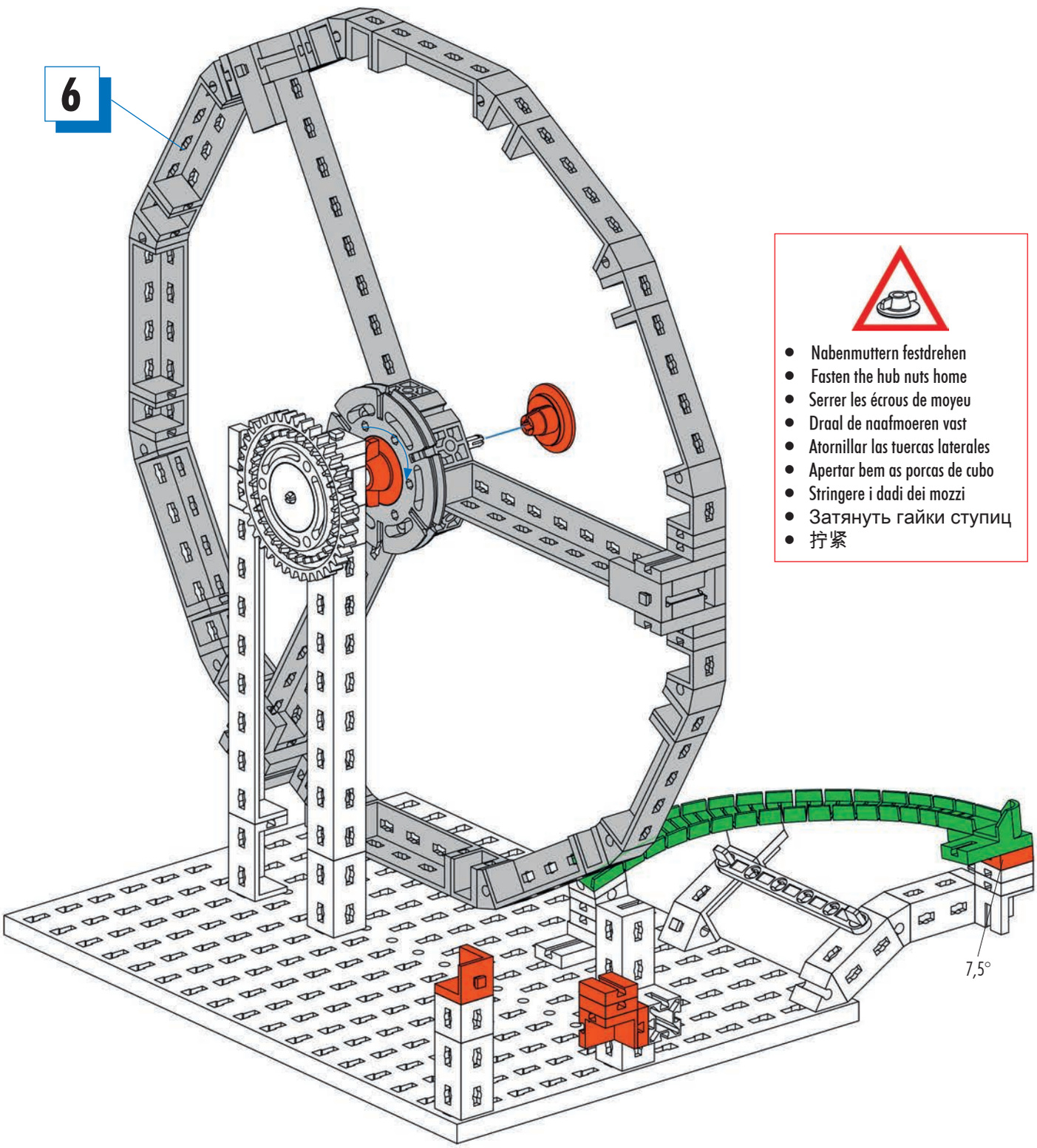

- Nabenmuttern festdrehen
- Fasten the hub nuts home
- Serrer les écrous de moyeu
- Draal de naafmoeren vast
- Atornillar las tuercas laterales
- Apertar bem as porcas de cubo
- Stringere i dadi dei mozzi
- Затянуть гайки ступиц
- 拧紧

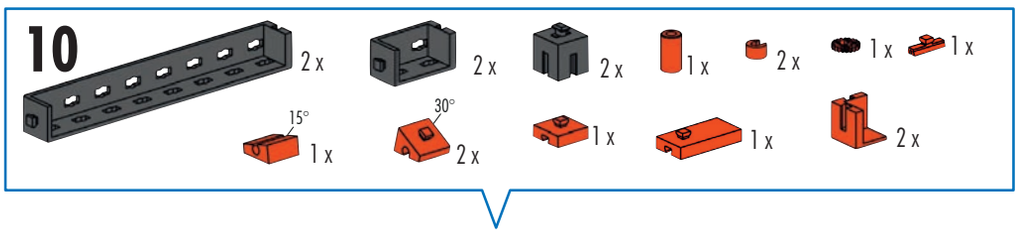
10
2 x
2 x
2 x
1 x
2 x
1 x
1 x
15°
1 x
30°
2 x
1 x
1 x
2 x

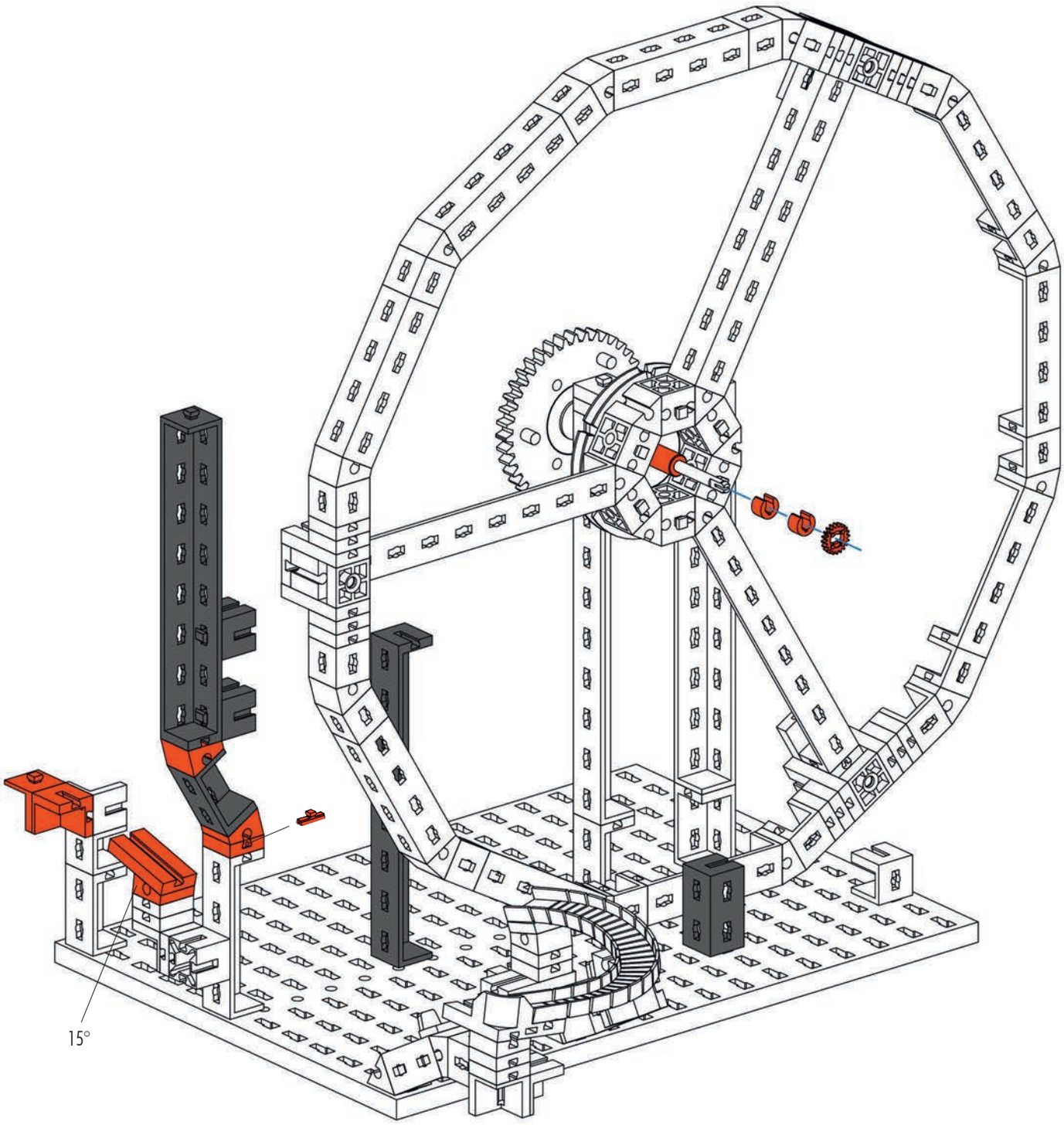
15°

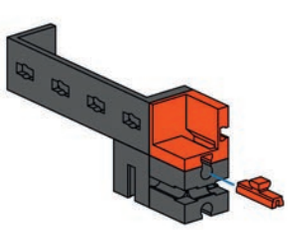

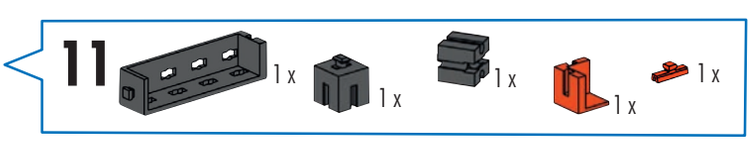
11
1 x
1 x
1 x
1 x
1 x

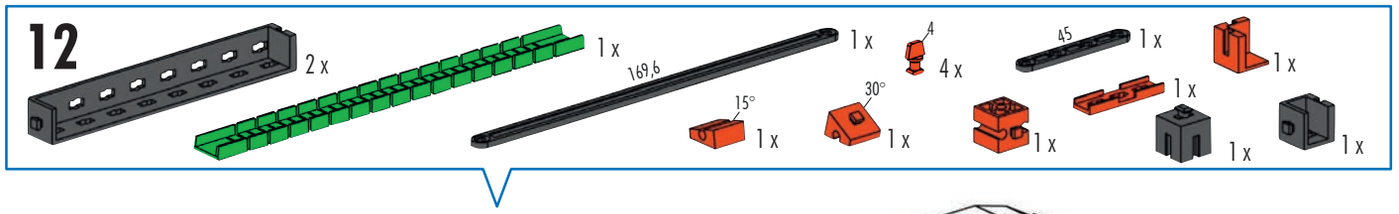

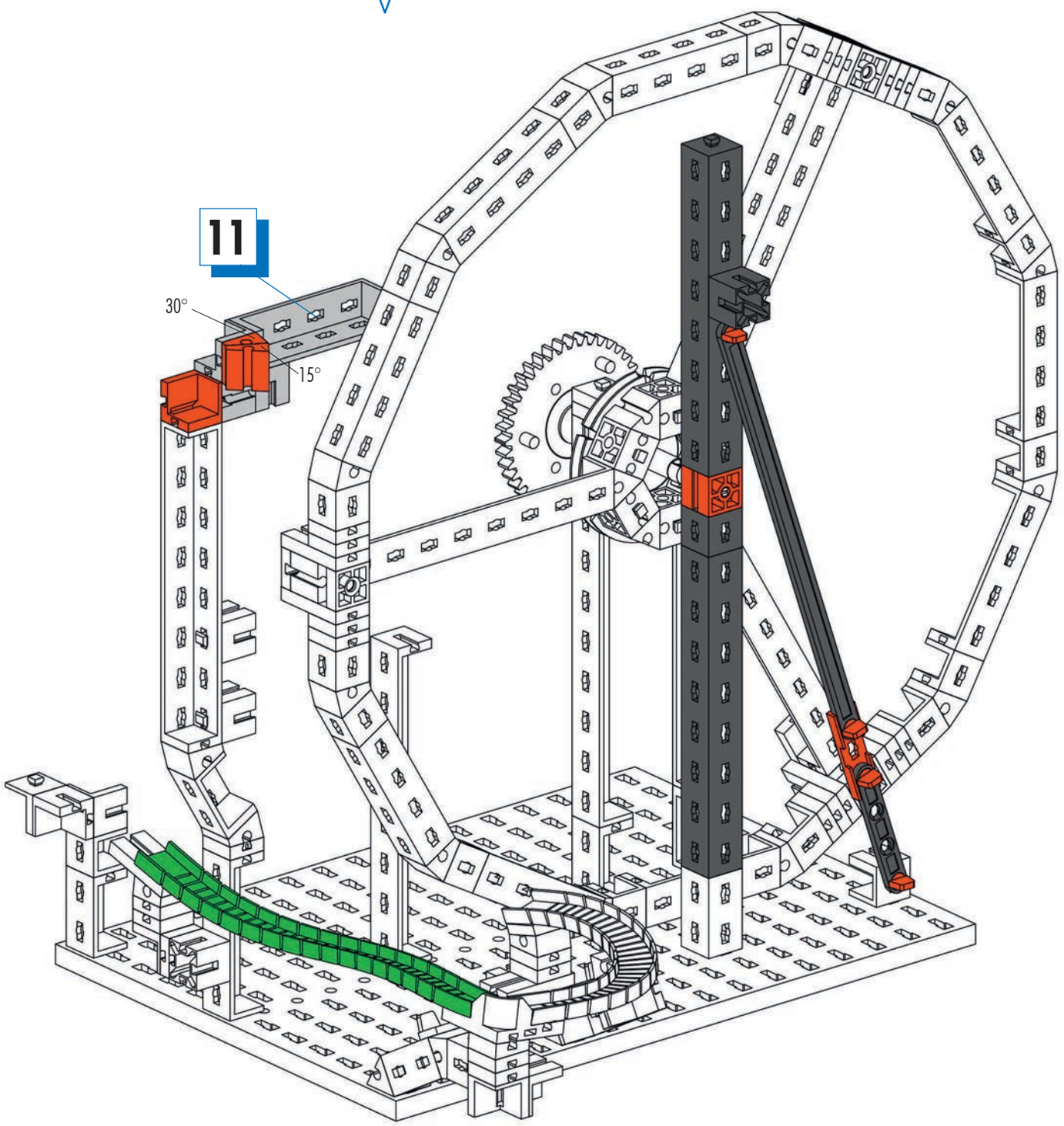

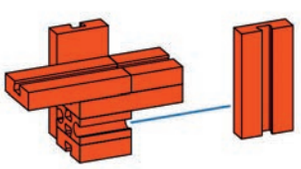

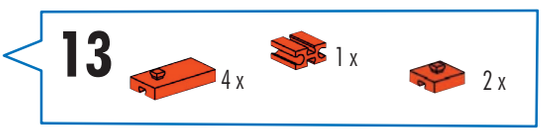

645

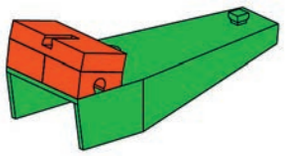

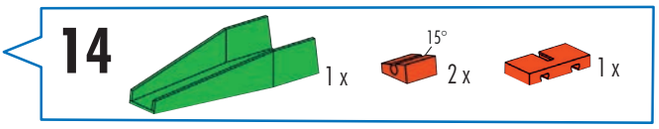
14
1 x
15°
2 x
1 x

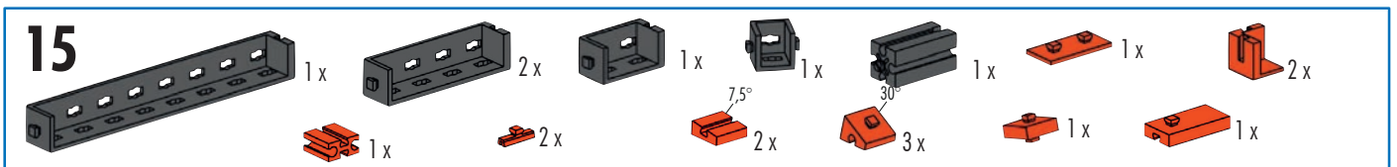
15
1 x
2 x
1 x
1 x
1 x
1 x
2 x
1 x
7,5°
2 x
30°
3 x
1 x
1 x

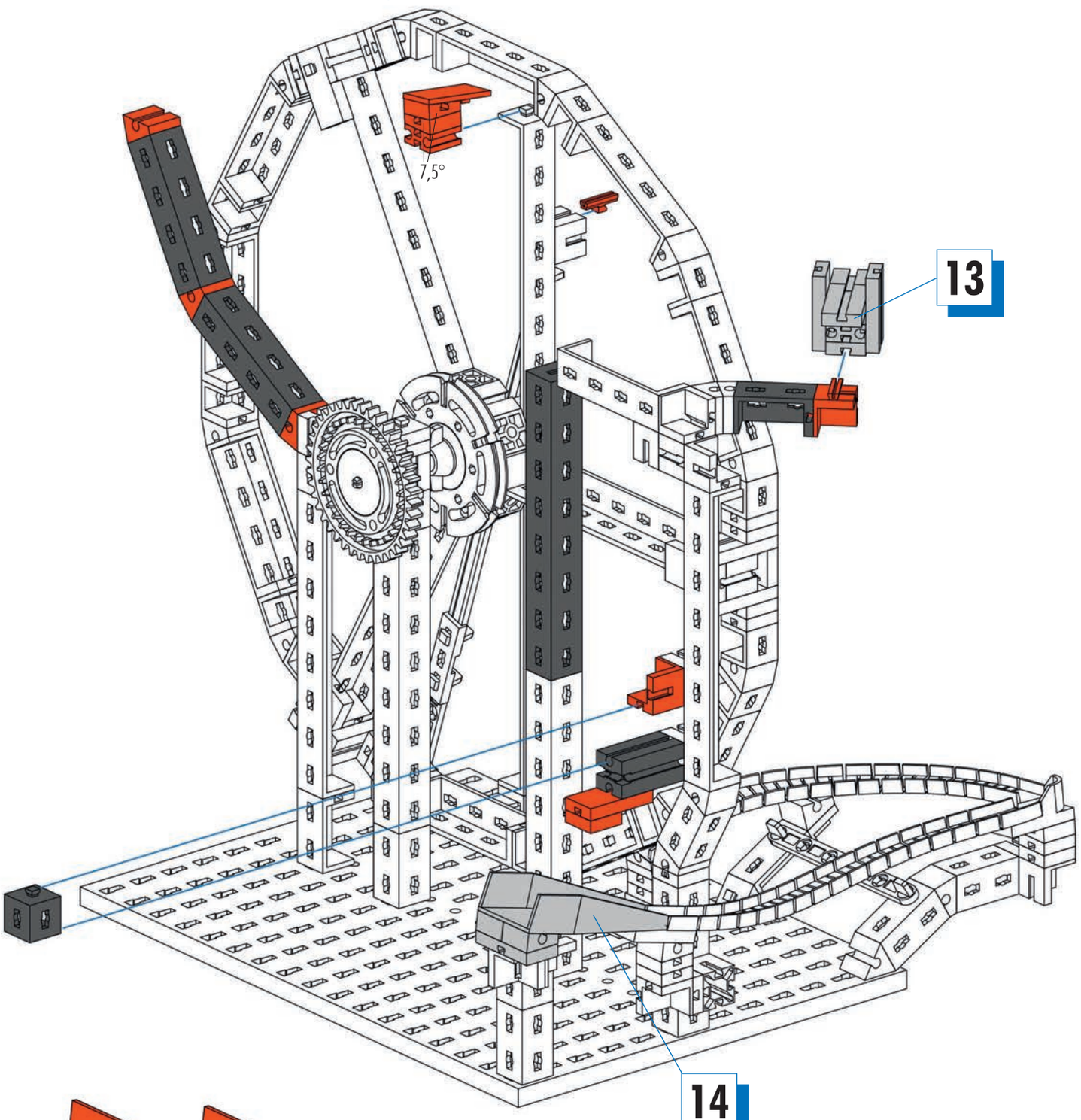
7,5°
13
14

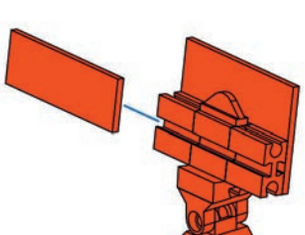

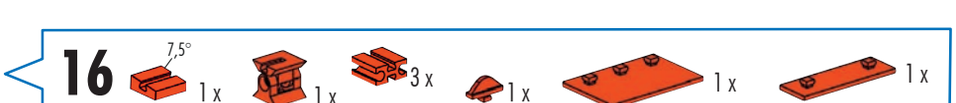
16
7,5°
1 x
1 x
3 x
1 x
1 x
1 x

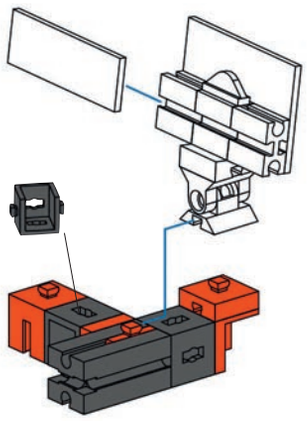

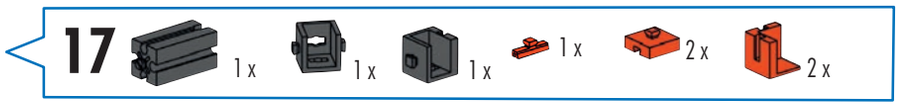

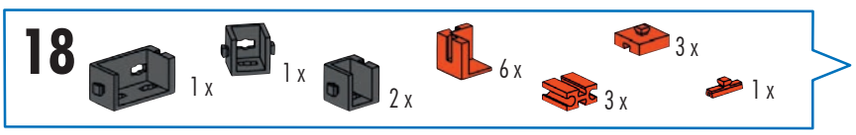

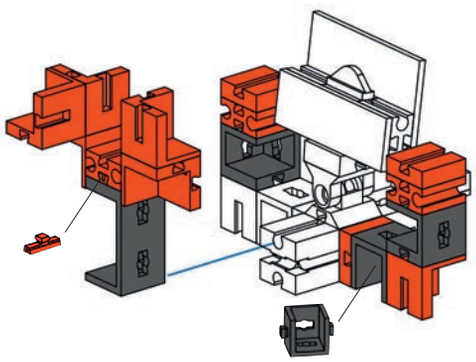

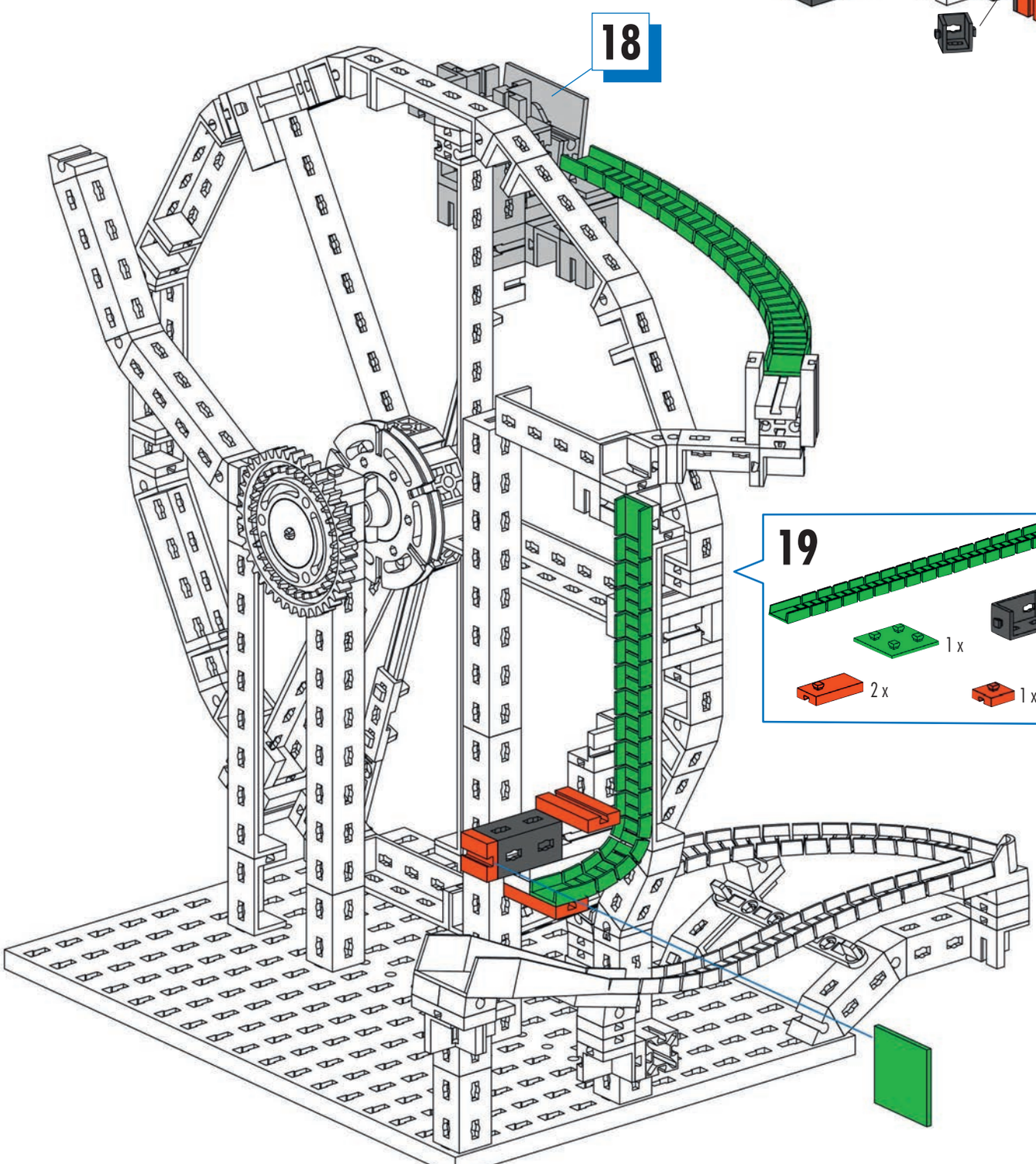

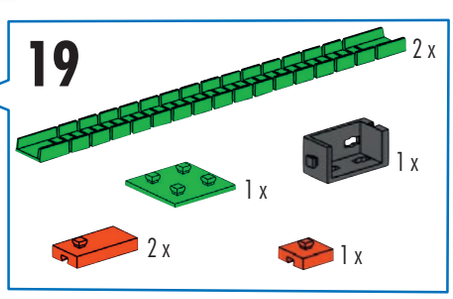

647

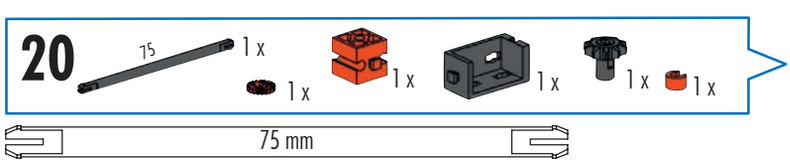
20
75
1 x
1 x
1 x
1 x
1 x
1 x
75 mm

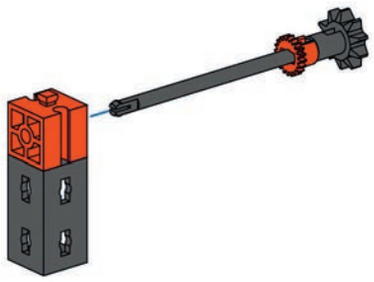

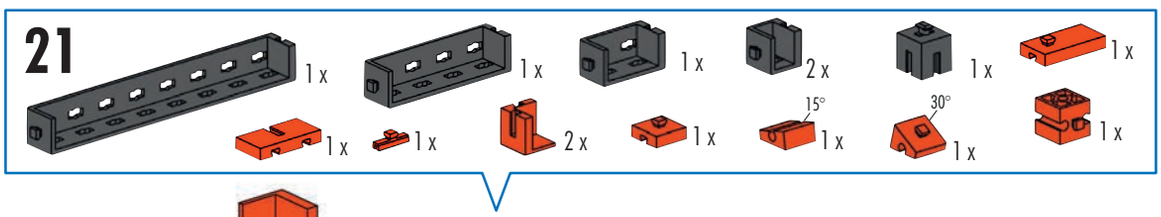
21
1 x
1 x
1 x
2 x
1 x
1 x
1 x
1 x
1 x
2 x
1 x
15°
1 x
30°
1 x
1 x

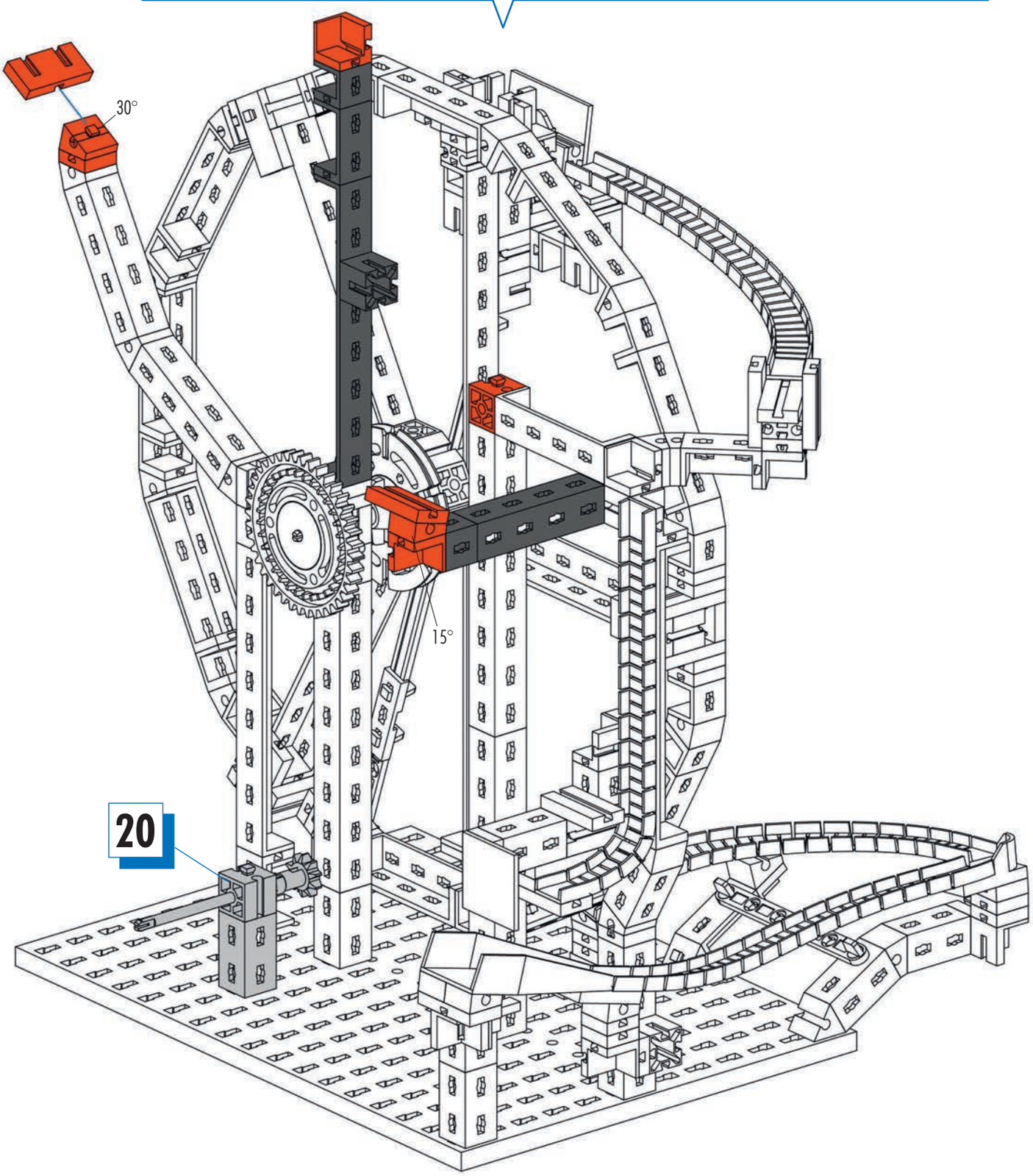
30°
15°
20

22
1 x
1 x
3 x
1 x
1 x

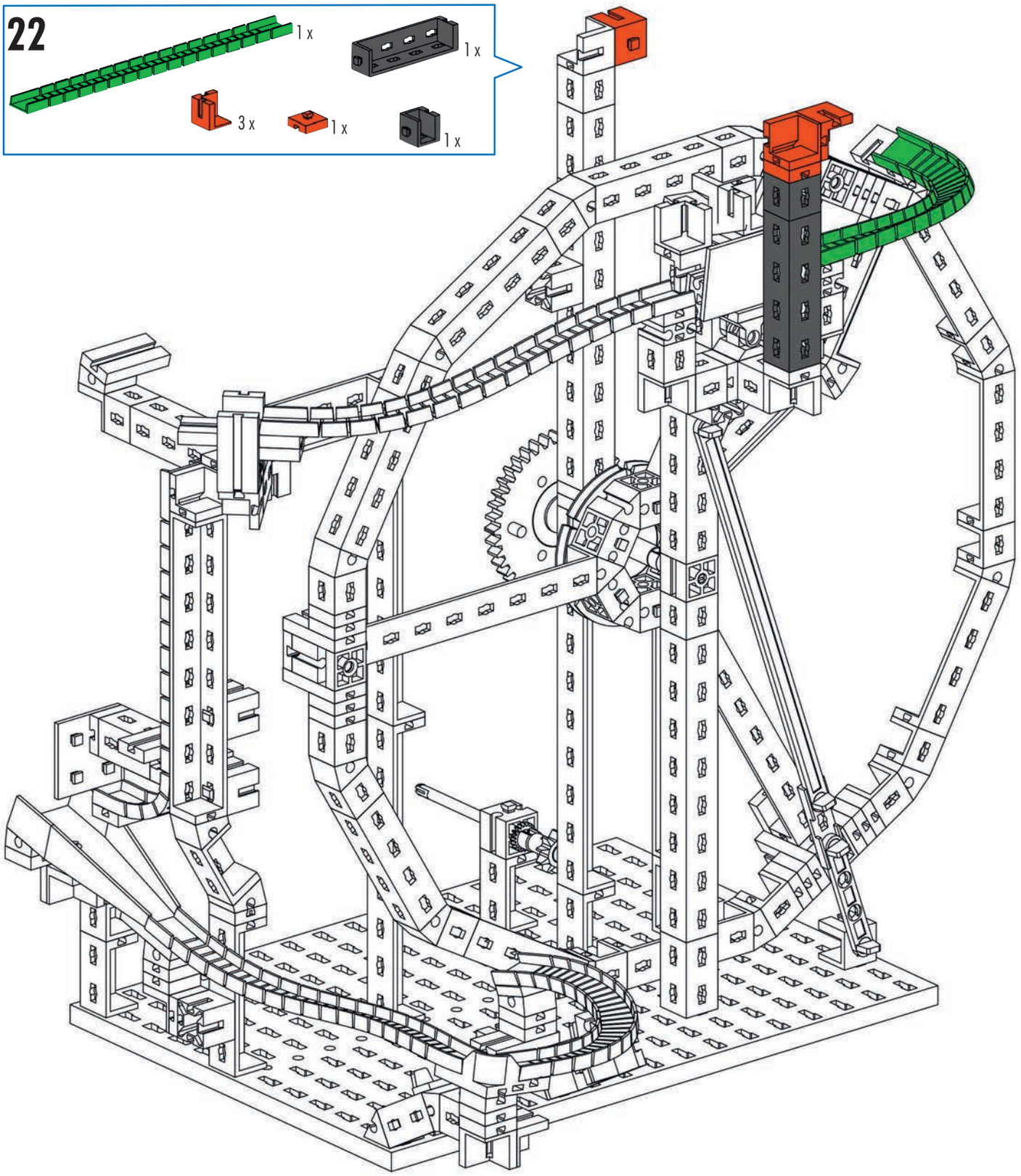

23
82 x
82 x

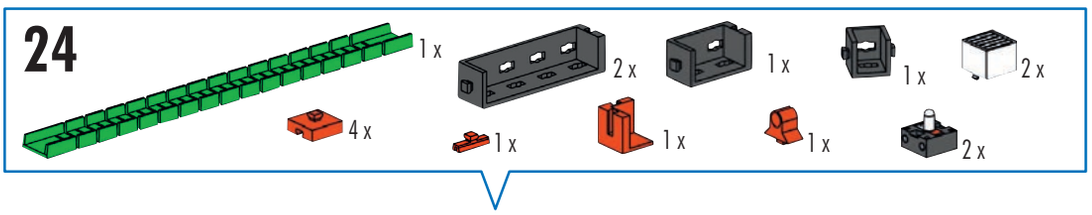
24
1 x
2 x
1 x
1 x
2 x
4 x
1 x
1 x
1 x
2 x

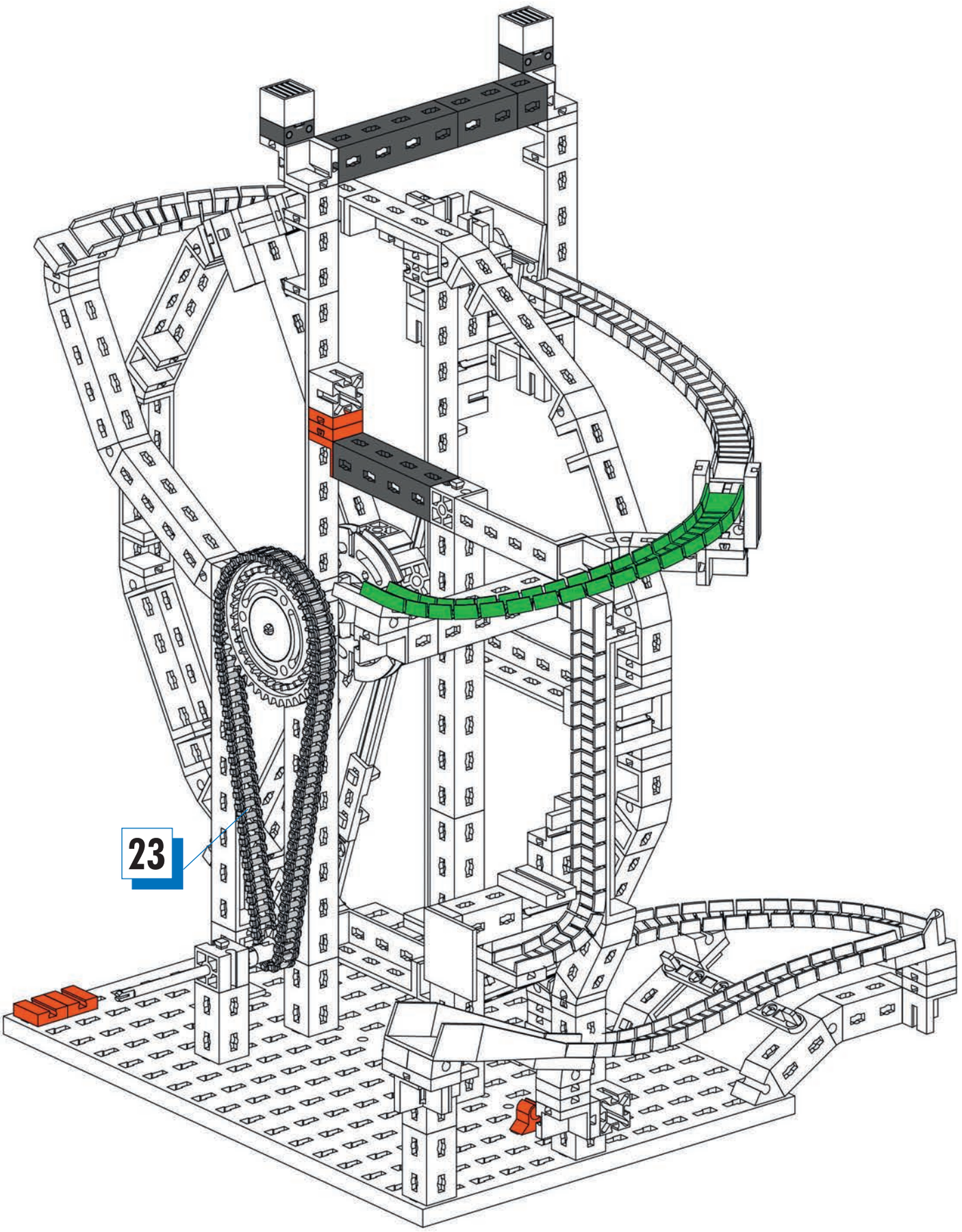
23

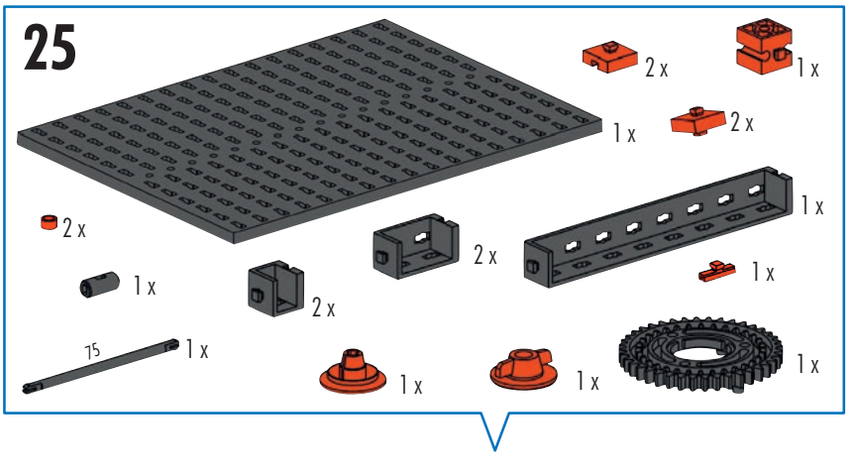

- Nabenmuttern festdrehen
- Fasten the hub nuts home
- Serrer les écrous de moyeu
- Draal de naafmoeren vast
- Atornillar las tuercas laterales
- Apertar bem as porcas de cubo
- Stringere i dadi dei mozzi
- Затянуть гайки ступиц
- 拧紧

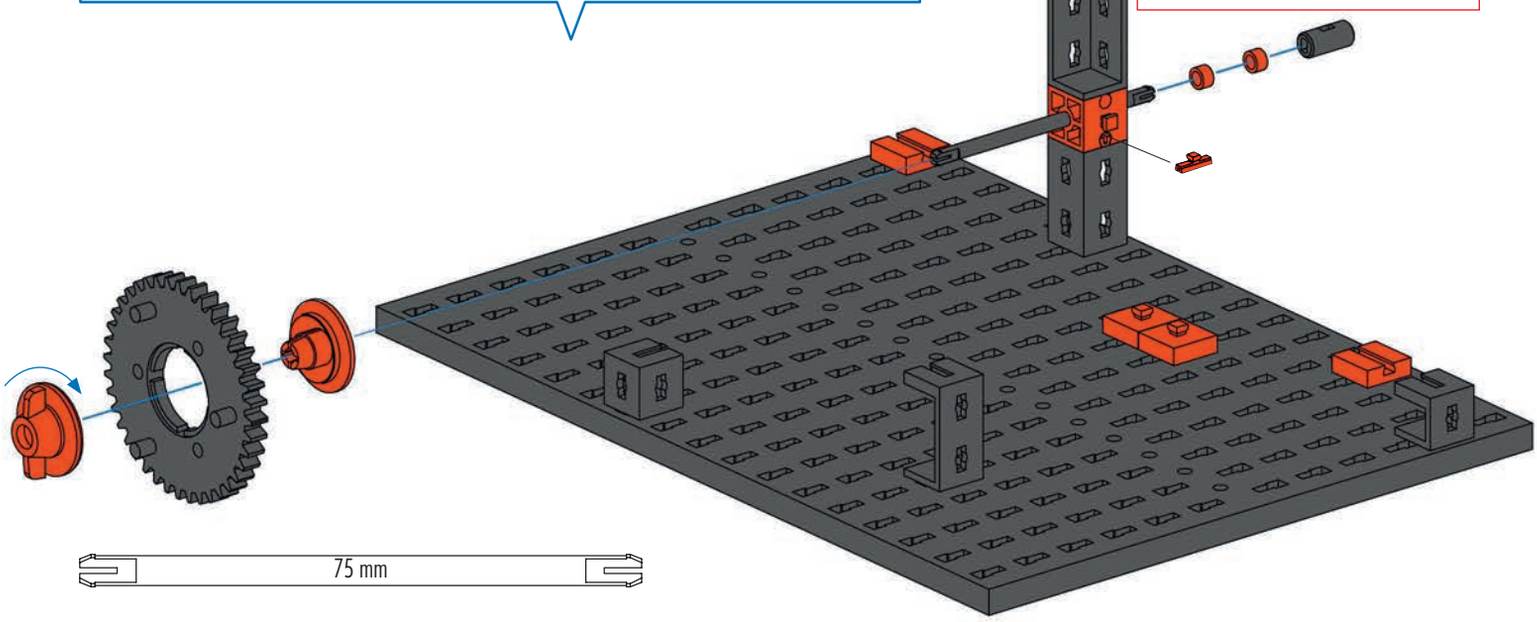

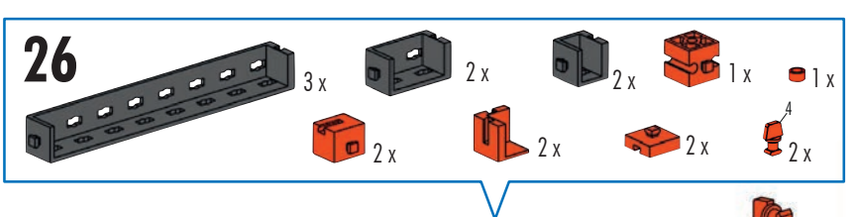

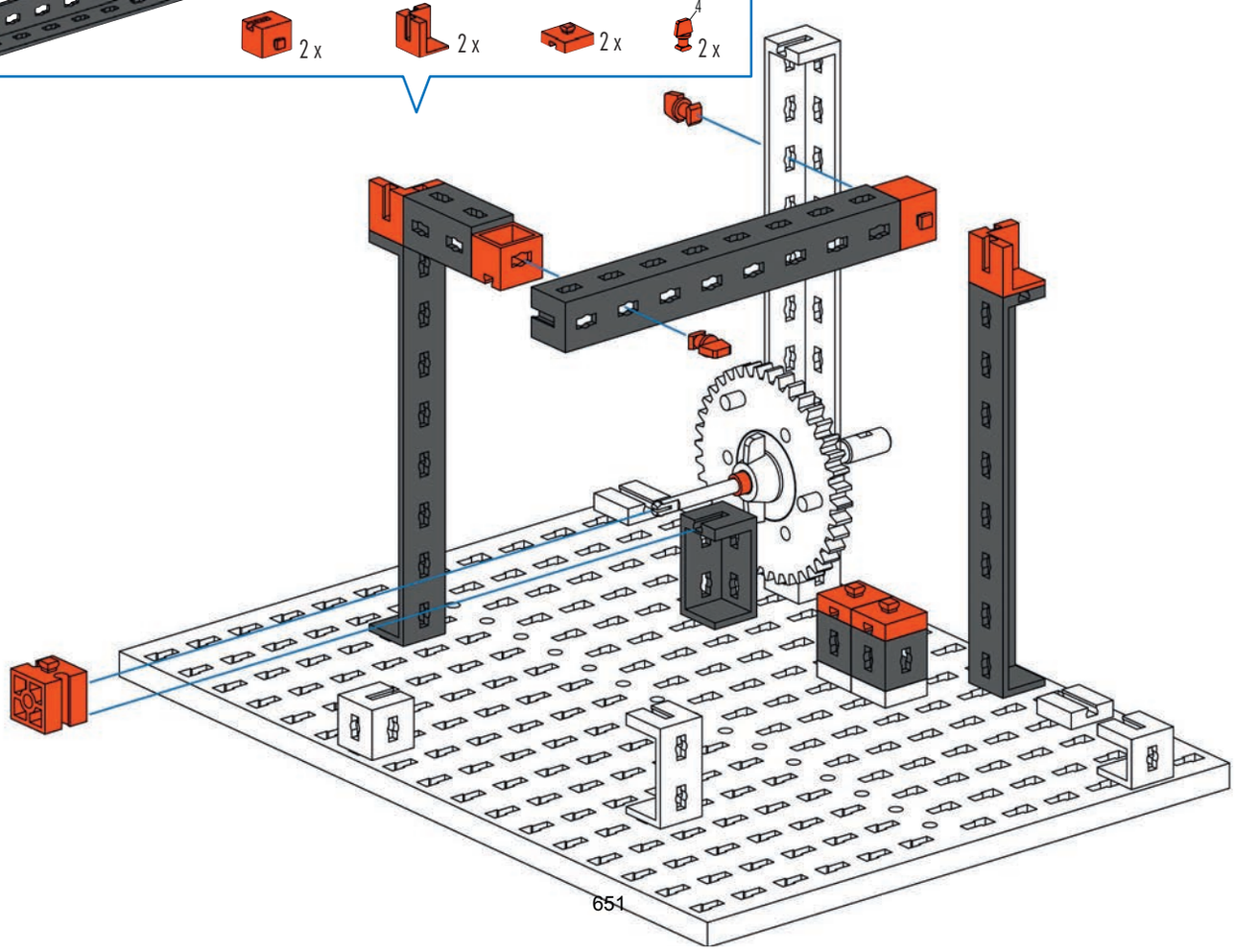

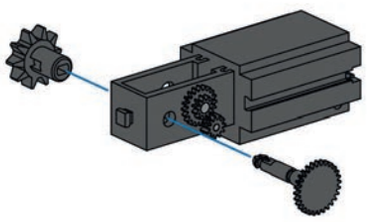

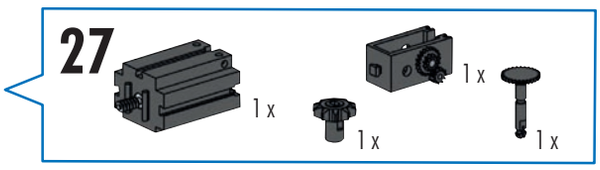
27
1 x
1 x
1 x
1 x

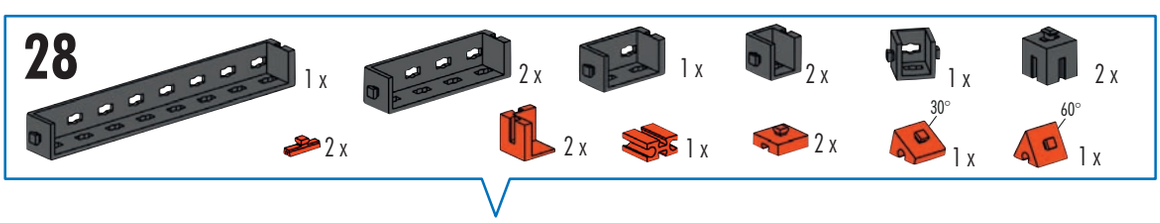
28
1 x
2 x
1 x
2 x
1 x
2 x
2 x
2 x
1 x
2 x
30°
1 x
60°
1 x

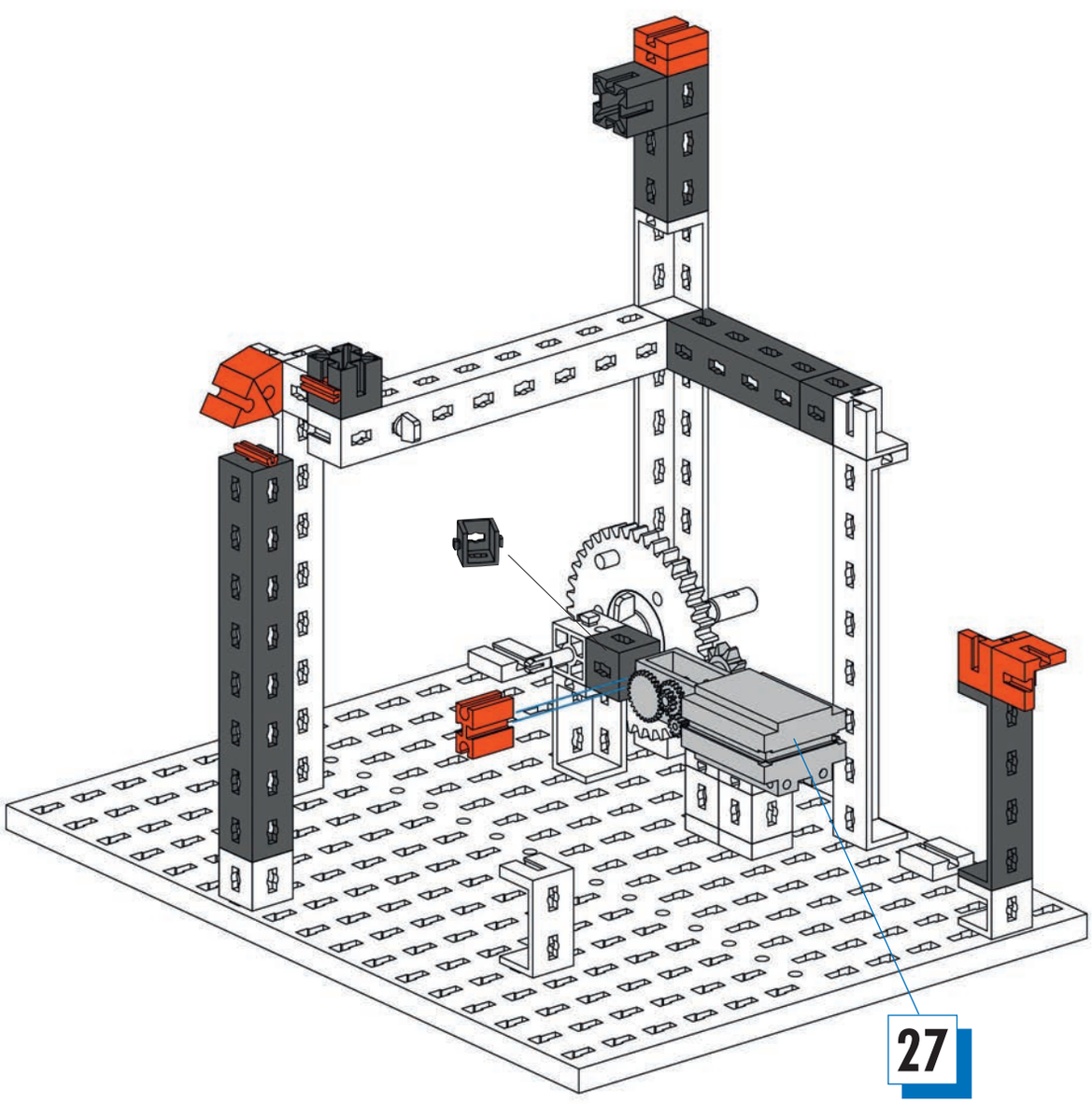
27

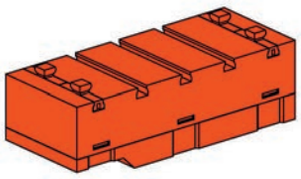

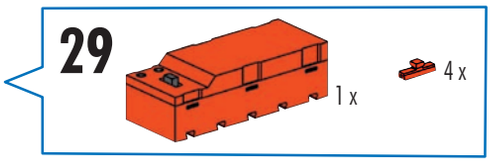
29
1 x
4 x

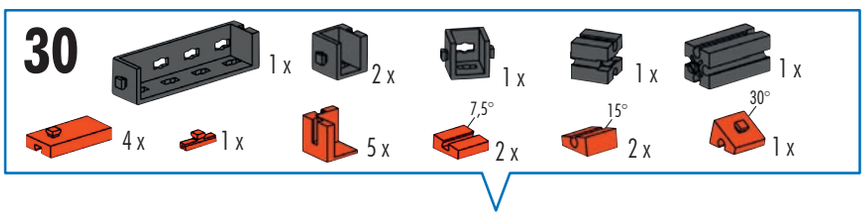
30
1 x
2 x
1 x
1 x
1 x
4 x
1 x
5 x
7,5°
2 x
15°
2 x
30°
1 x

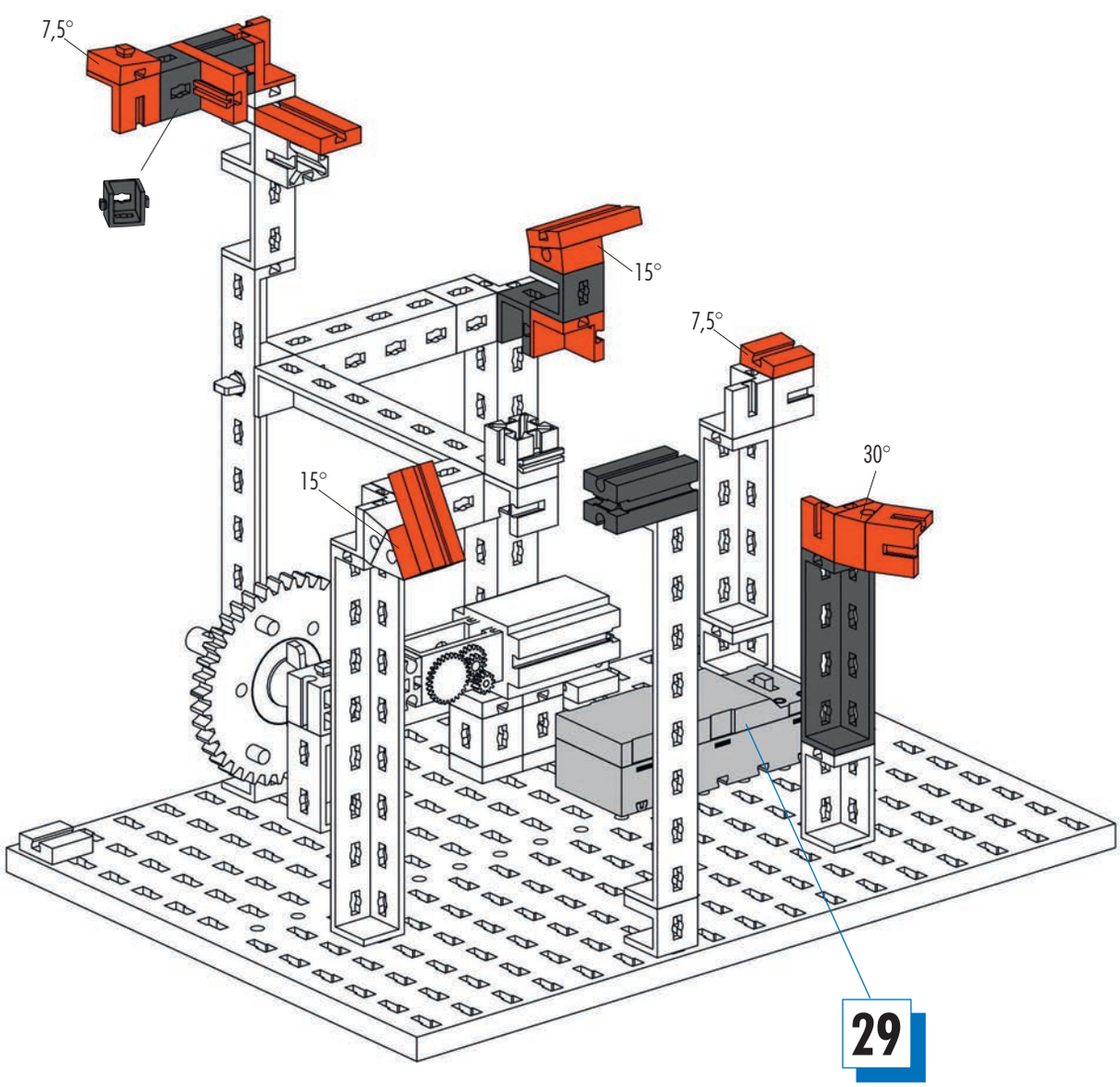
7,5°
15°
7,5°
30°
15°
29

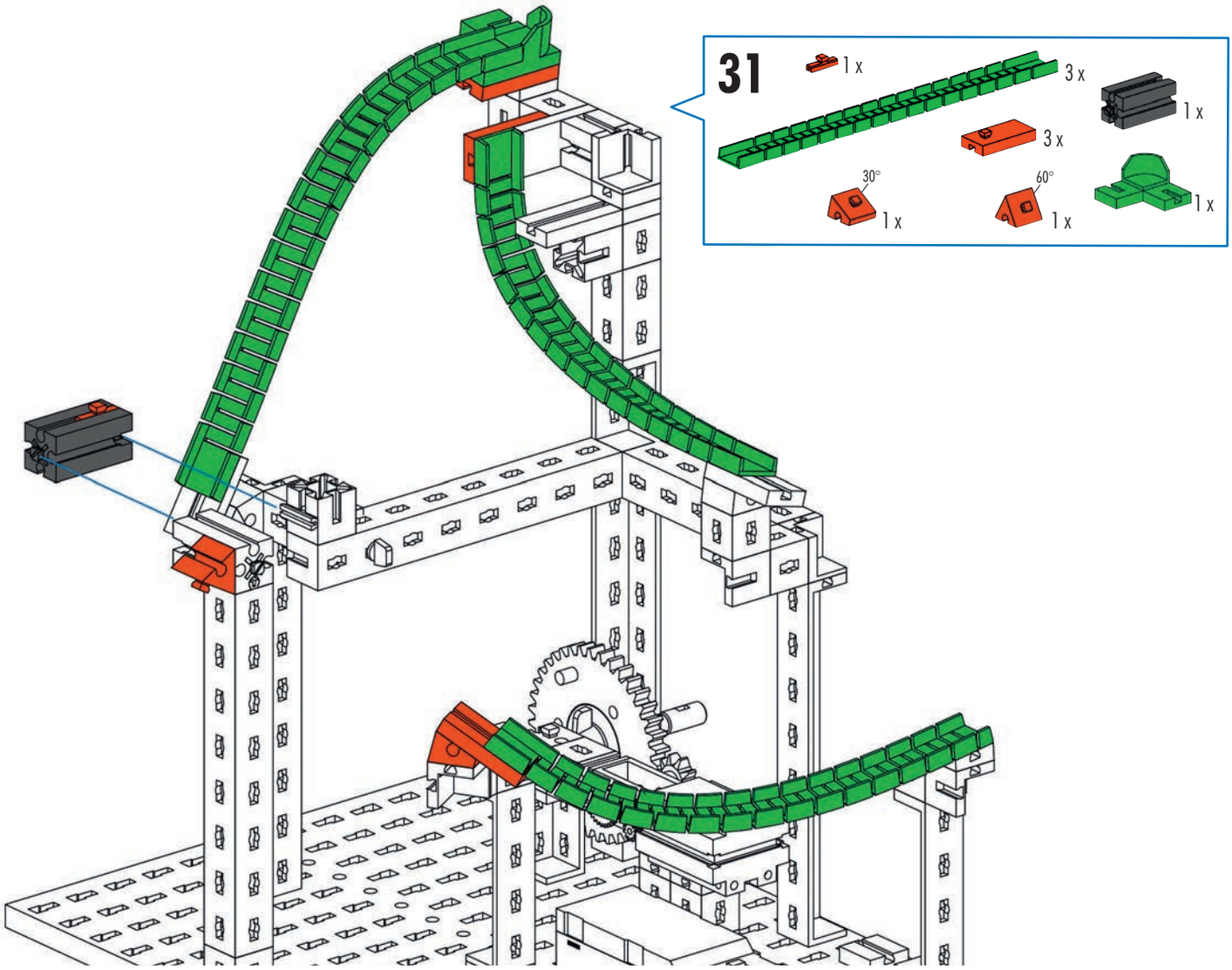
31
1 x
3 x
1 x
3 x
30°
1 x
60°
1 x
1 x

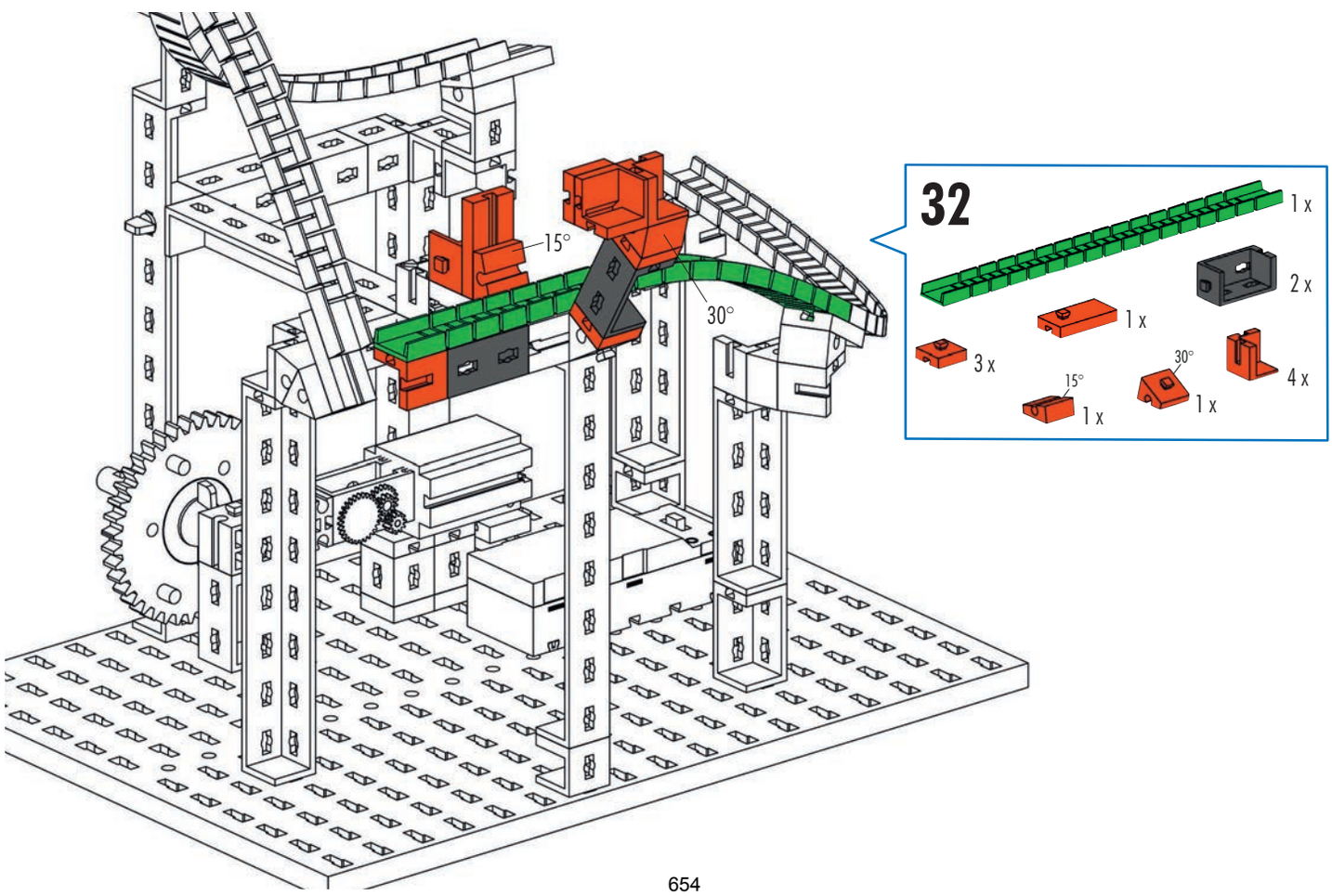
15°
30°
32
1 x
2 x
1 x
3 x
30°
4 x
15°
1 x
1 x

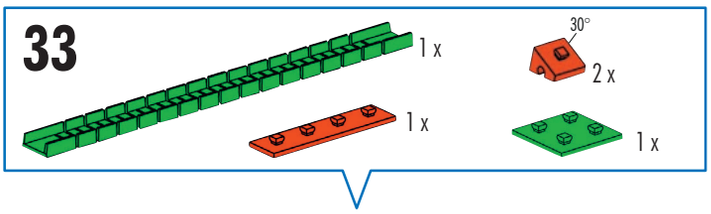
33
1 x
1 x
30°
2 x
1 x

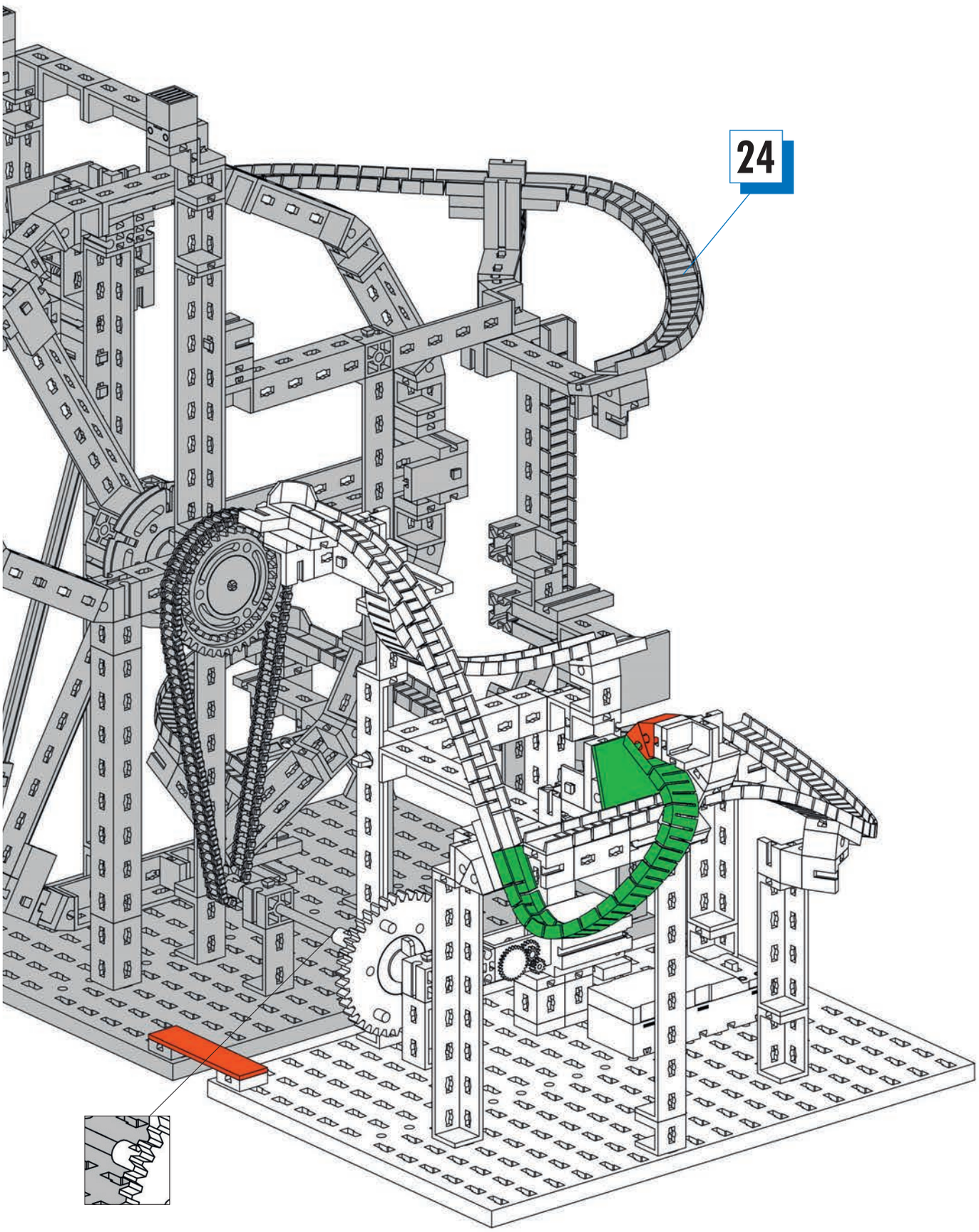
24

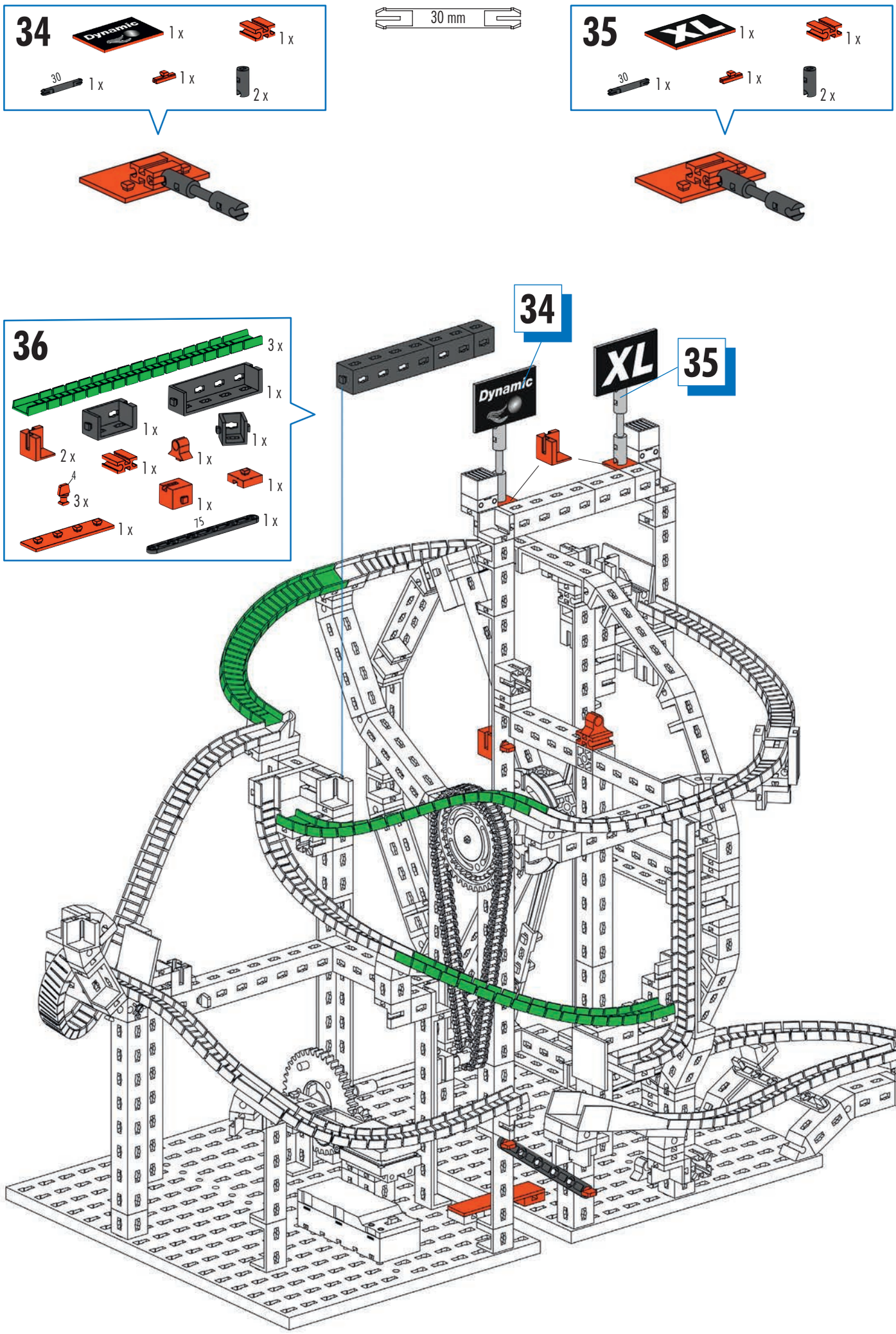
34
Dynamic
1 x
1 x
30
1 x
1 x
2 x
30 mm
35
XL
1 x
1 x
30
1 x
1 x
2 x
36
3 x
1 x
1 x
1 x
2 x
1 x
1 x
4
3 x
1 x
1 x
15
1 x
34
35
Dynamic
XL

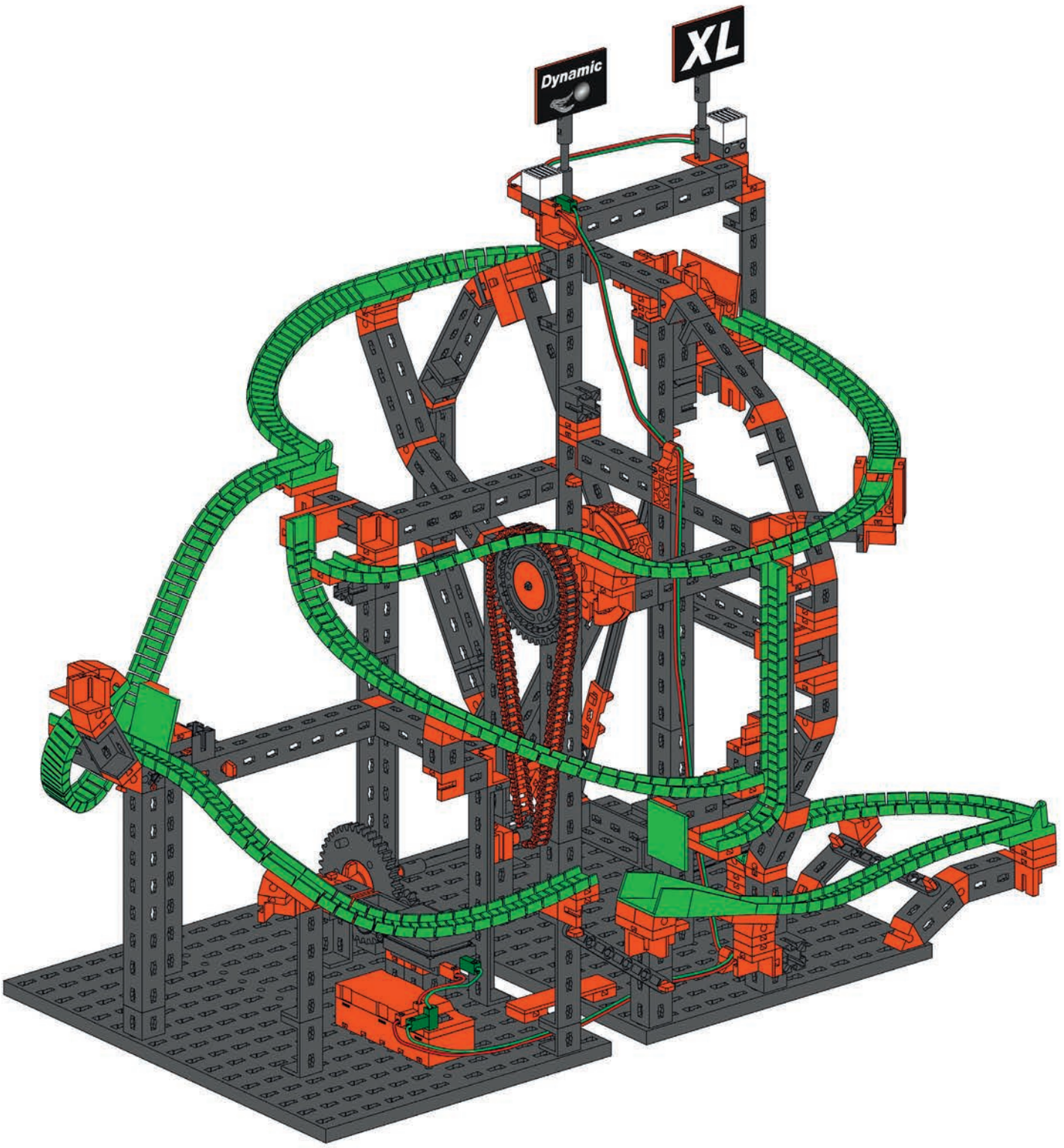

Schaltplan
Circuit diagram
Plan électrique

Schakelschema
Diagrama de circuitos
Plano elétrico de ligação

Schema elettrico
Схема подключения
电路图

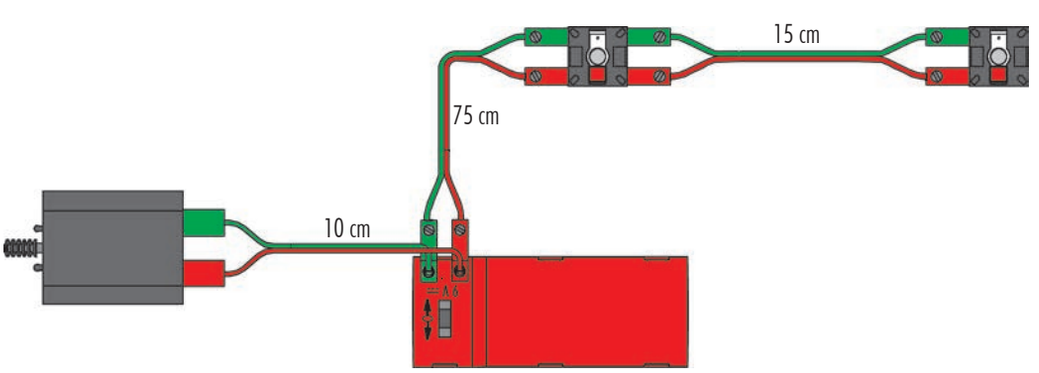

657

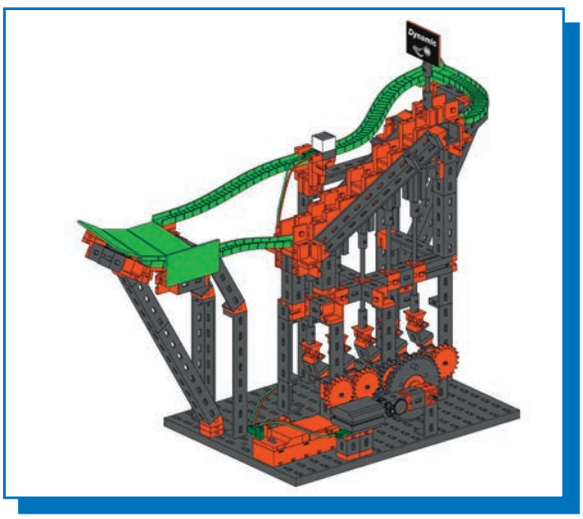

Treppenförderer
Stair step conveyor
Monte-escalier
Trapsgewijze transporteur
Transportador de escalera
Transportadora de escada
Convogliatore a scala
Лестничный транспортёр
阶梯式输送机

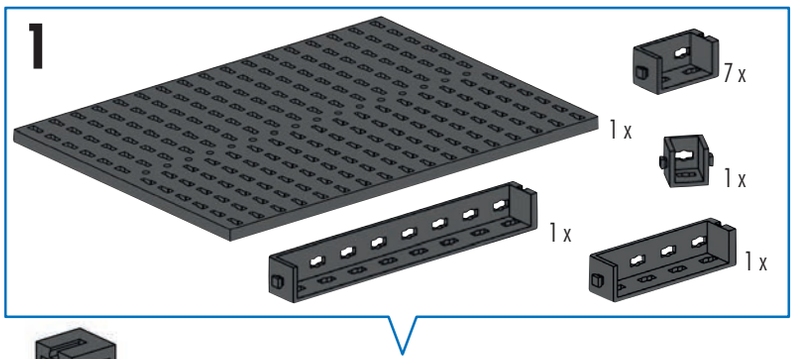

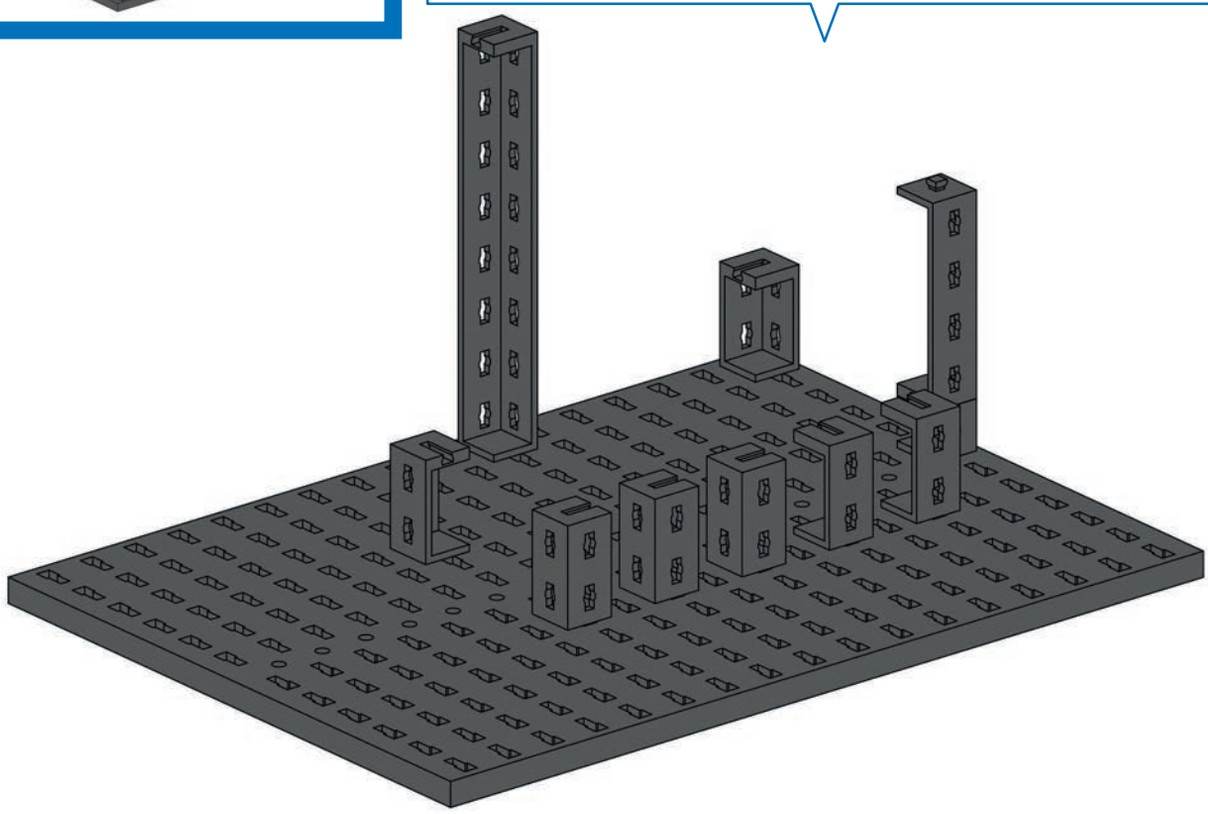

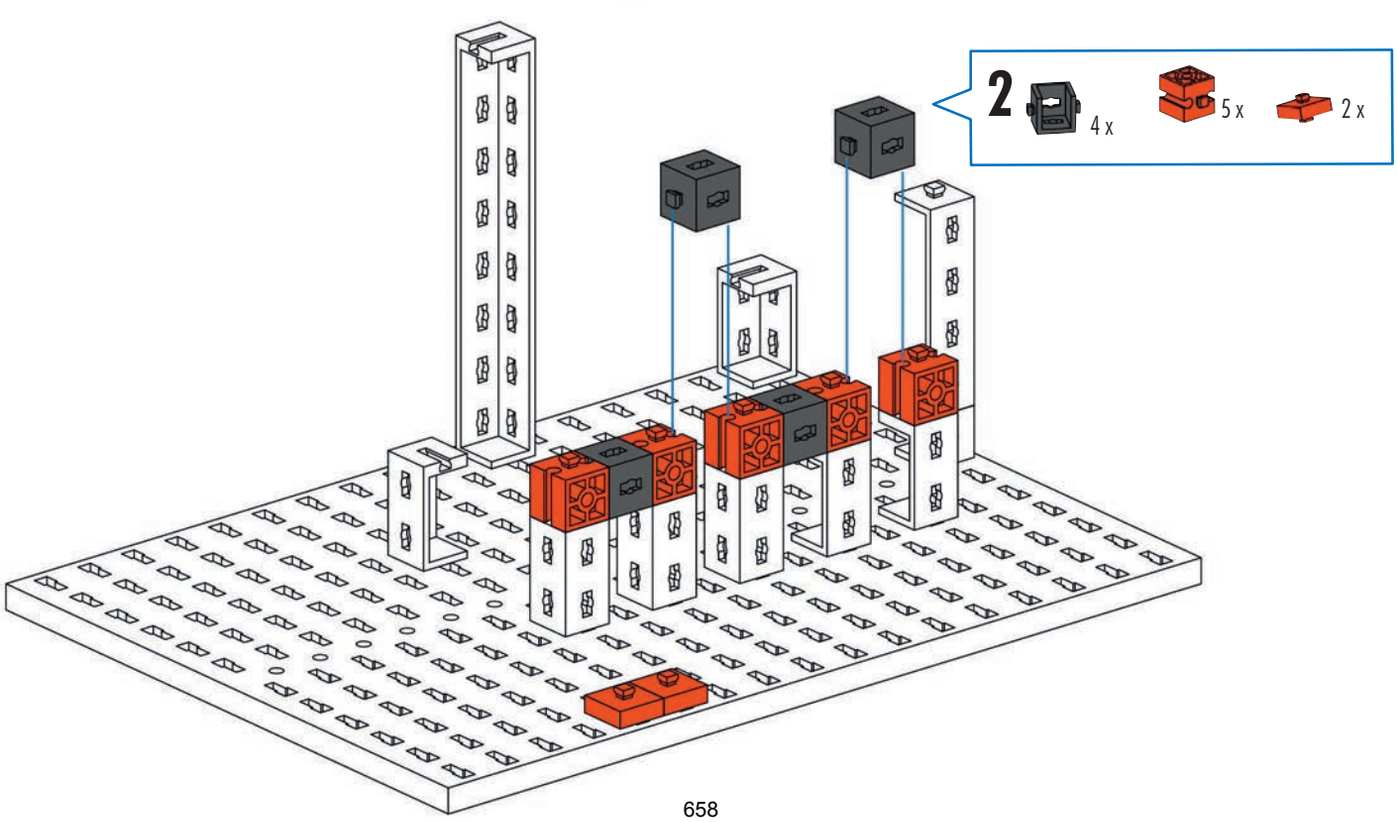

658

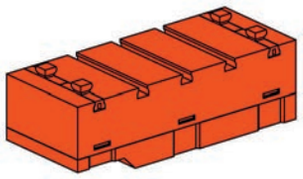

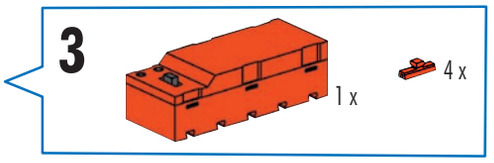

- Kurbeln genau ins dieser Position einbauen!
- Install crank exactly in this position!
- Monter les manivelles exactement sur cette position !
- Monteer de slingers precies op deze positie!
- ¡Montar la manivela exactamente en esta posición!
- Monte as manivelas exatamente nesta posição!
- Montare le manovelle esattamente in questa posizione!
- Установите кривошипы точно в этой позиции!
- 请将手摇柄准确地装入这个位置！

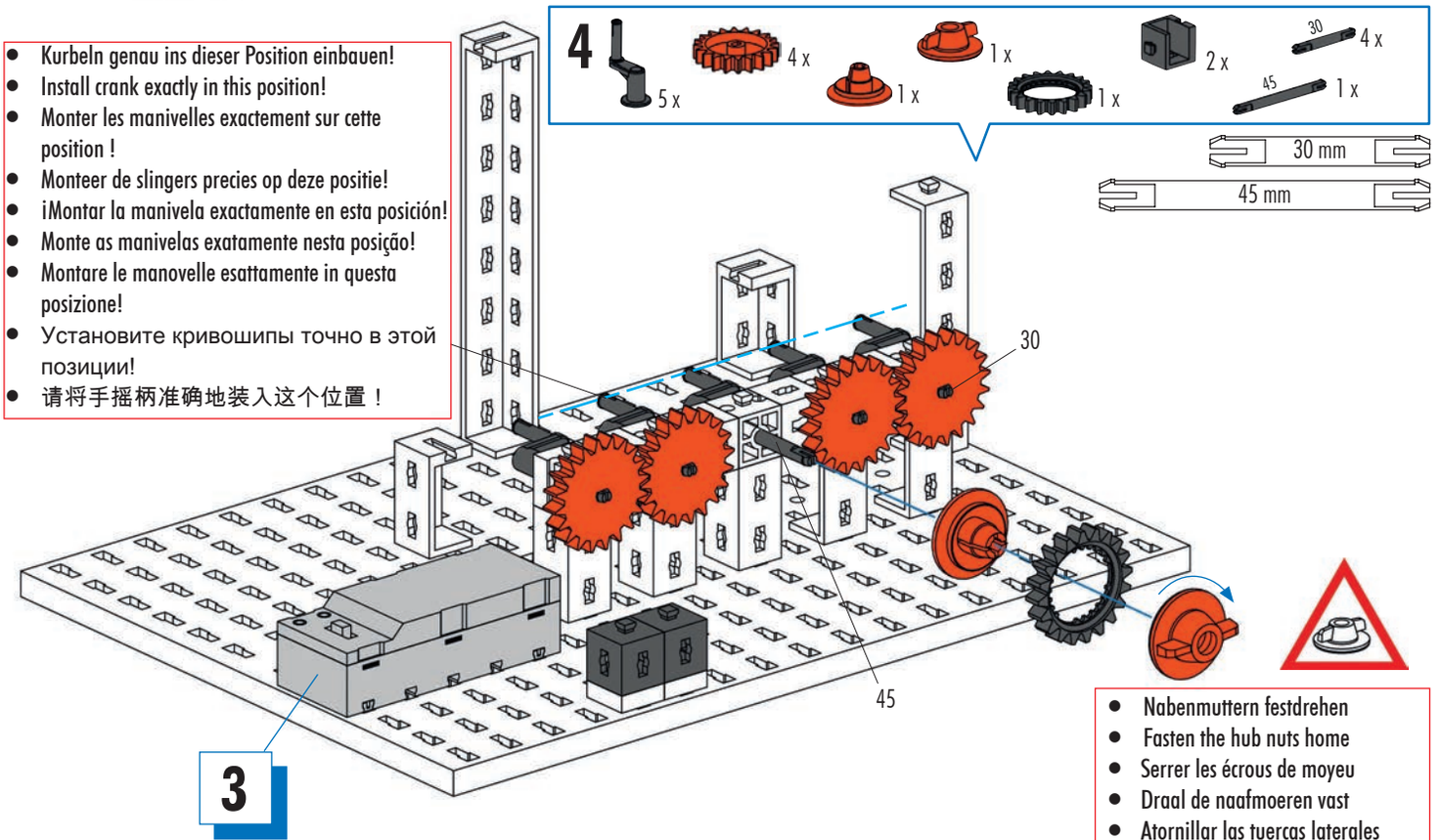

- Nabenmuttern festdrehen
- Fasten the hub nuts home
- Serrer les écrous de moyeu
- Draal de naafmoeren vast
- Atornillar las tuercas laterales
- Apertar bem as porcas de cubo
- Stringere i dadi dei mozzi
- Затянуть гайки ступиц
- 拧紧

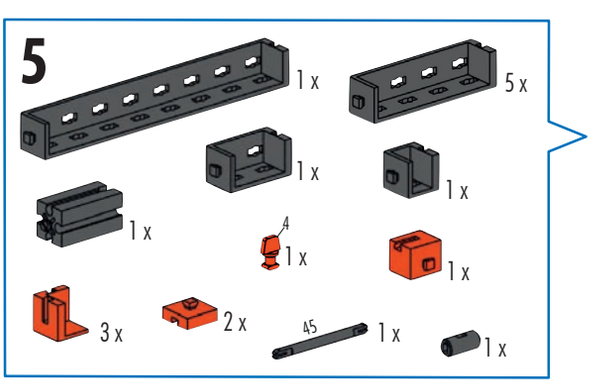

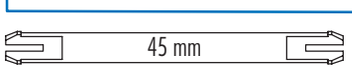

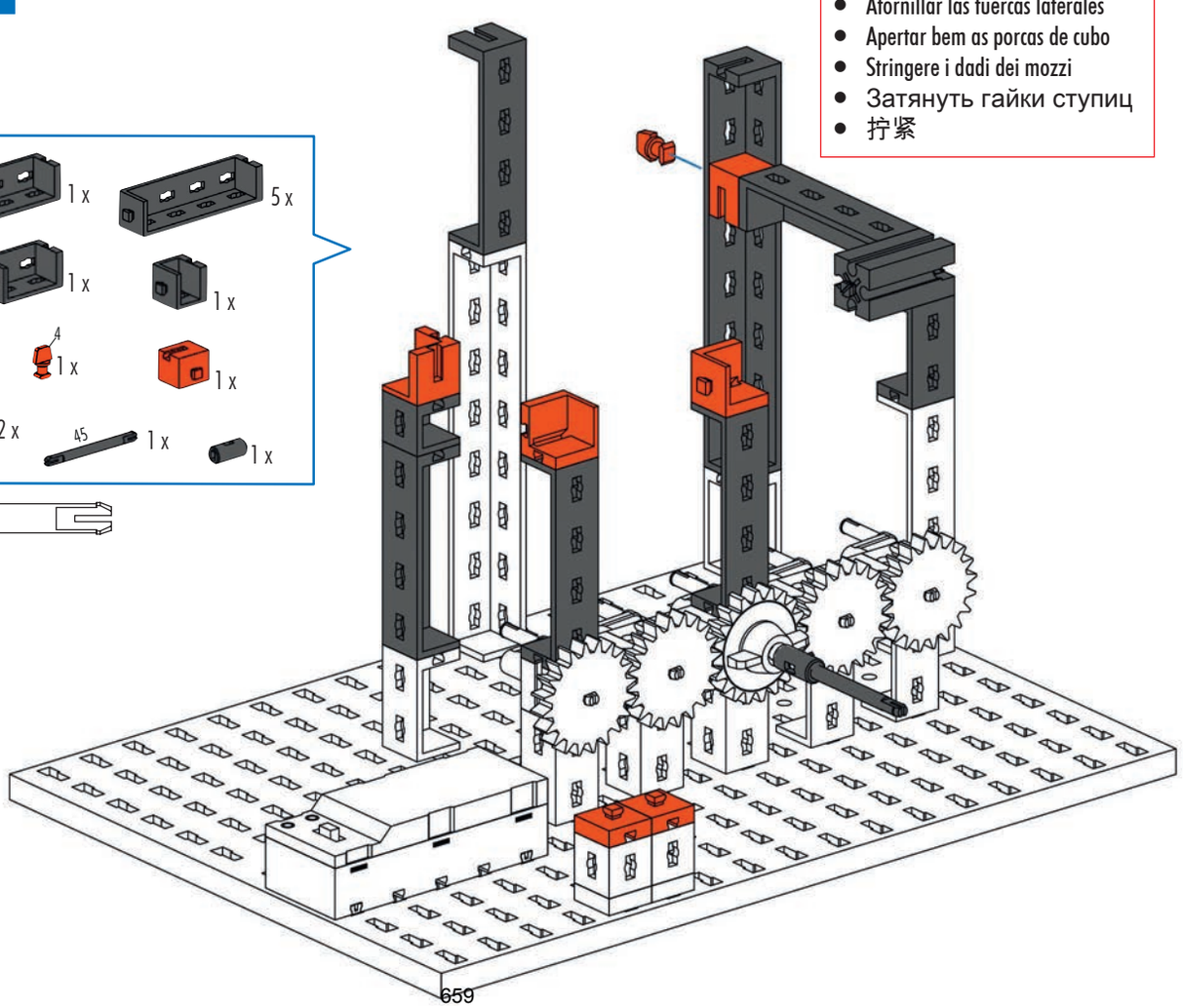

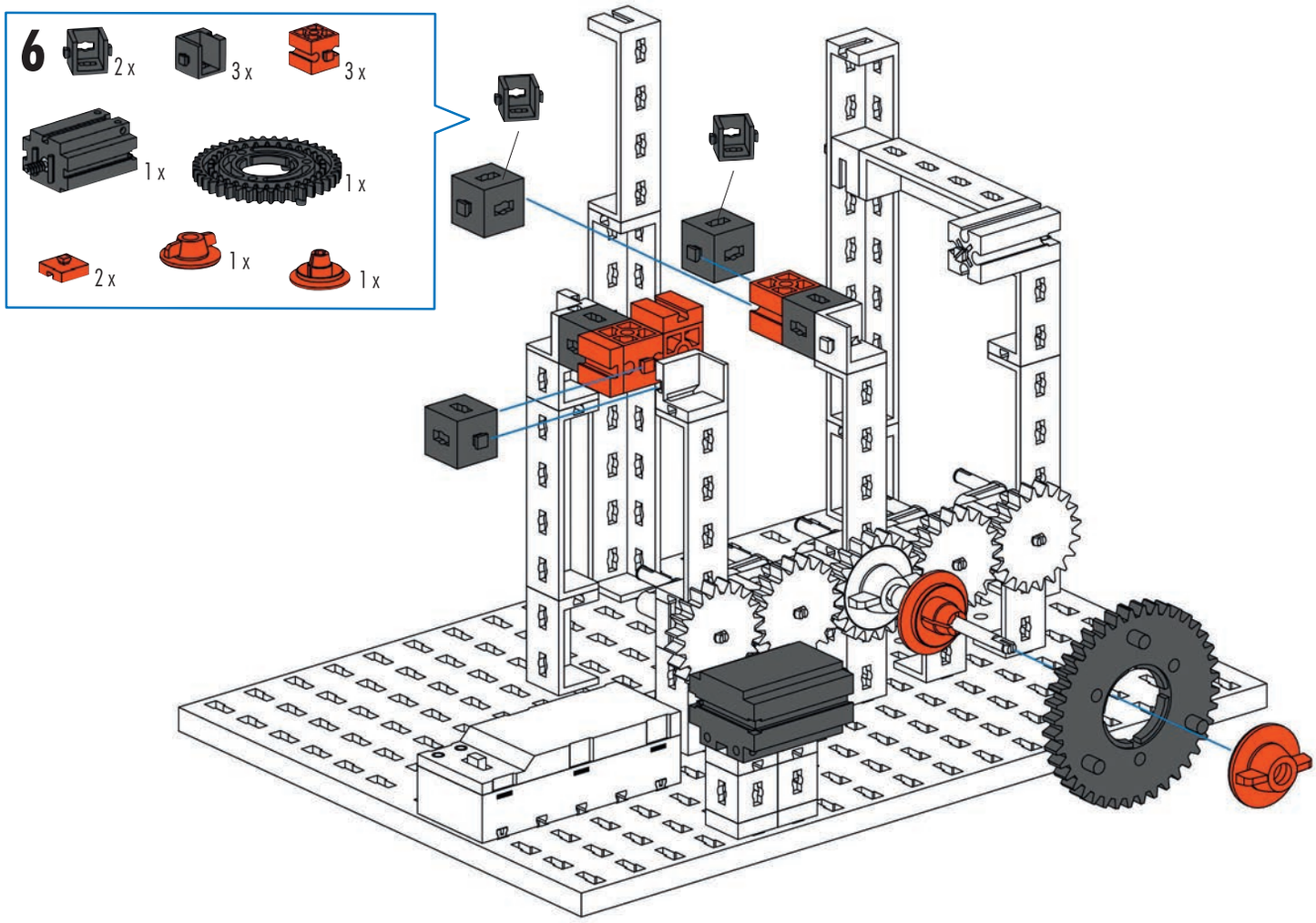
6
2 x
3 x
3 x
1 x
1 x
2 x
1 x
1 x

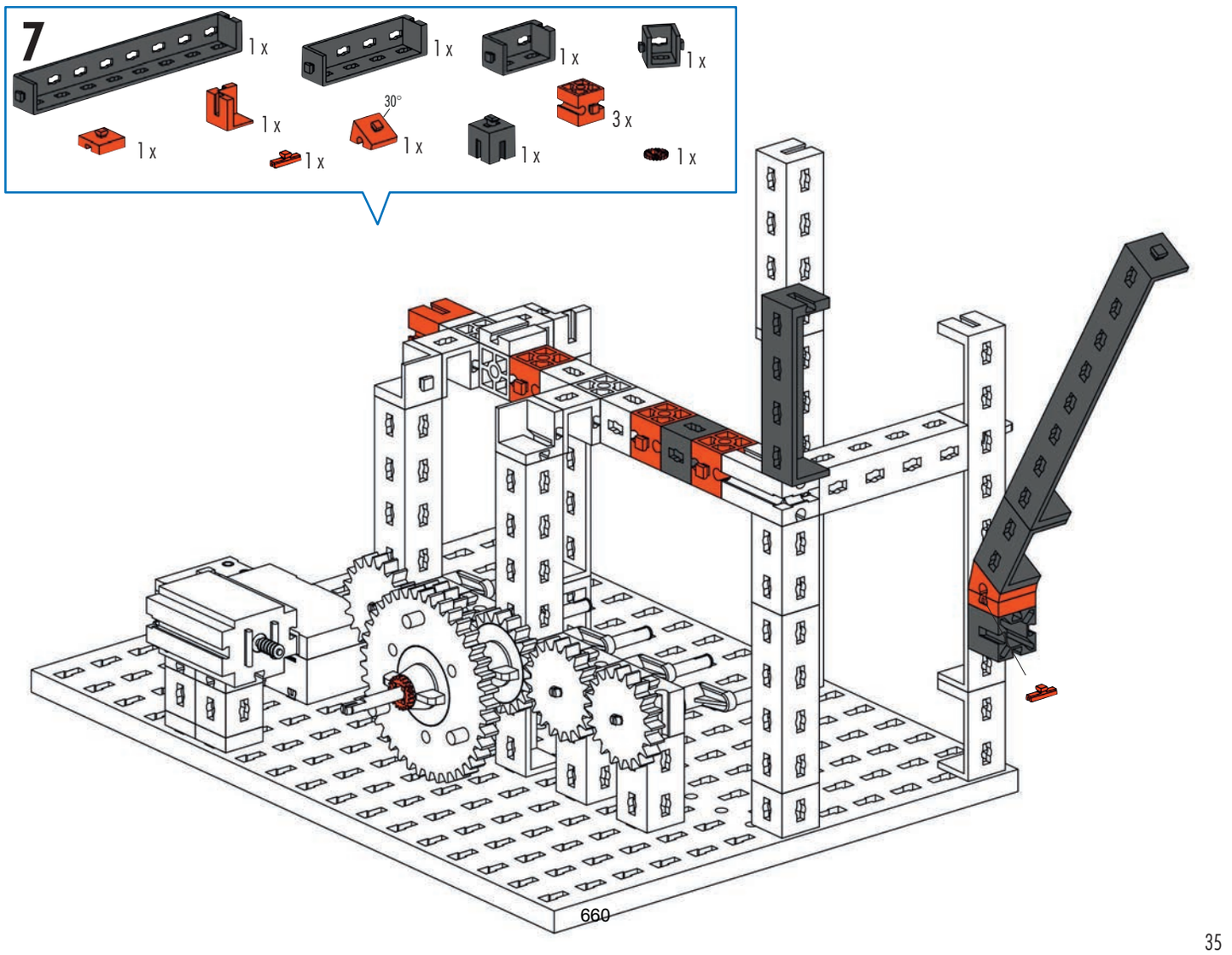
7
1 x
1 x
1 x
1 x
1 x
30°
1 x
3 x
1 x
1 x
1 x
1 x
660

8 5 x 5 x 5 x 5 x

5 x

9 1 x 1 x 1 x 5 x 30° 1 x

60 2 x 75 1 x 90 2 x

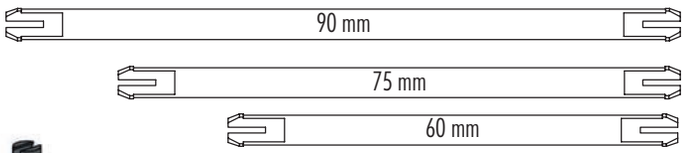

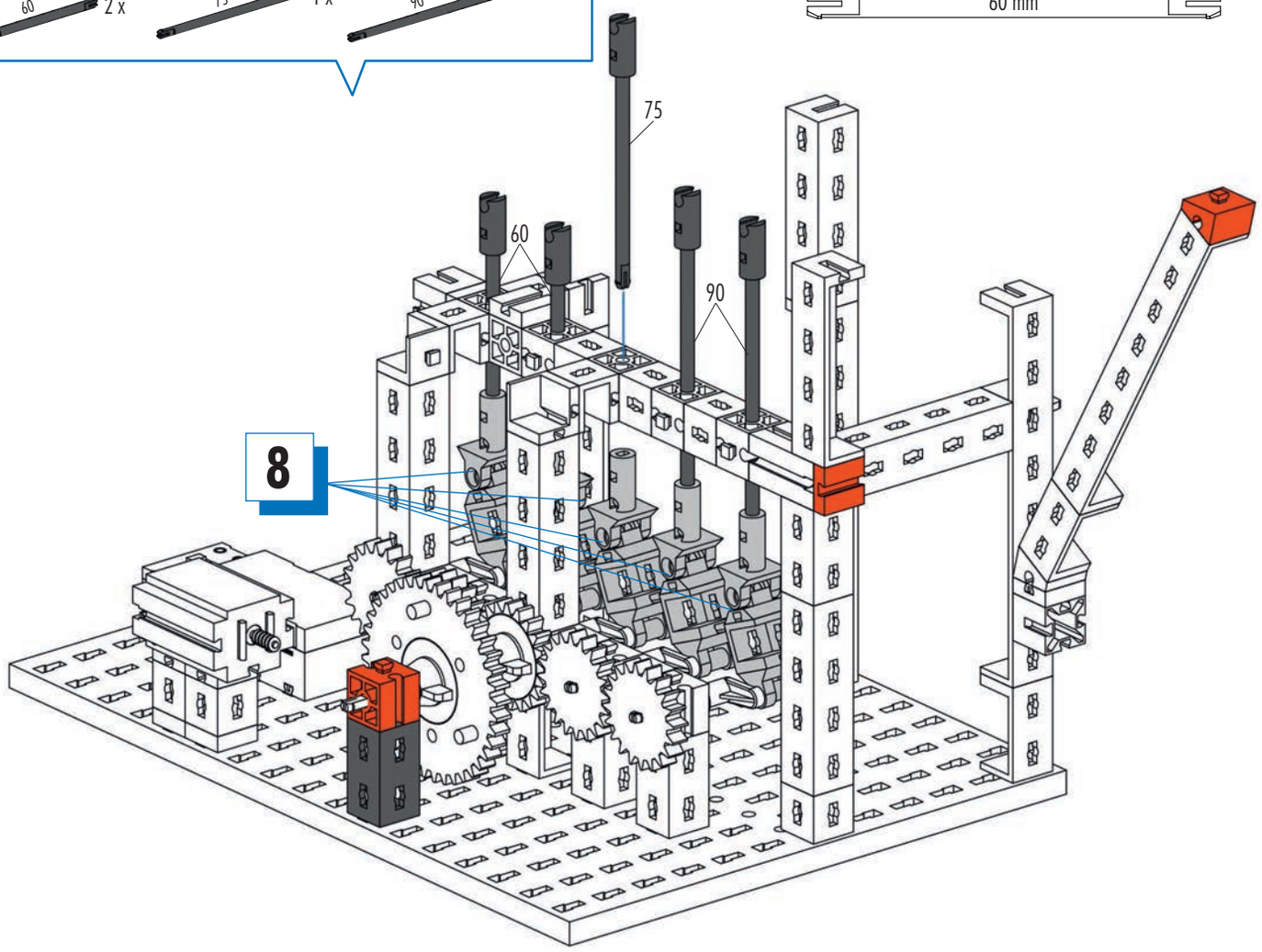

10 1 x 1 x 7,5° 1 x 1 x 1 x 30° 1 x

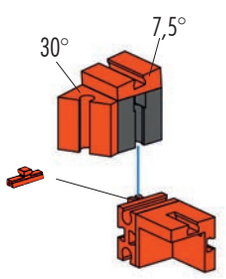

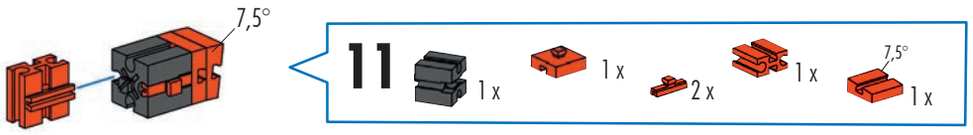
7,5°
11
1 x
1 x
2 x
1 x
7,5°
1 x

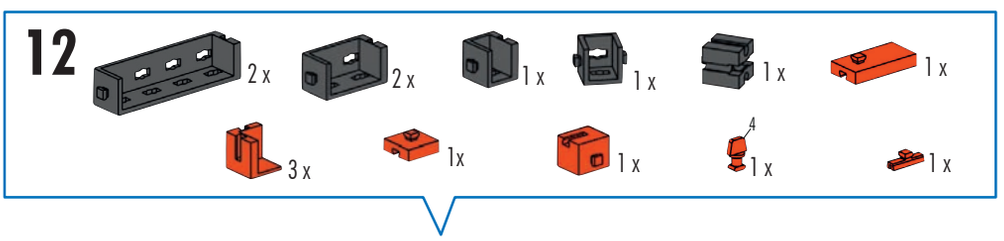
12
2 x
2 x
1 x
1 x
1 x
1 x
3 x
1x
1 x
4
1 x
1 x

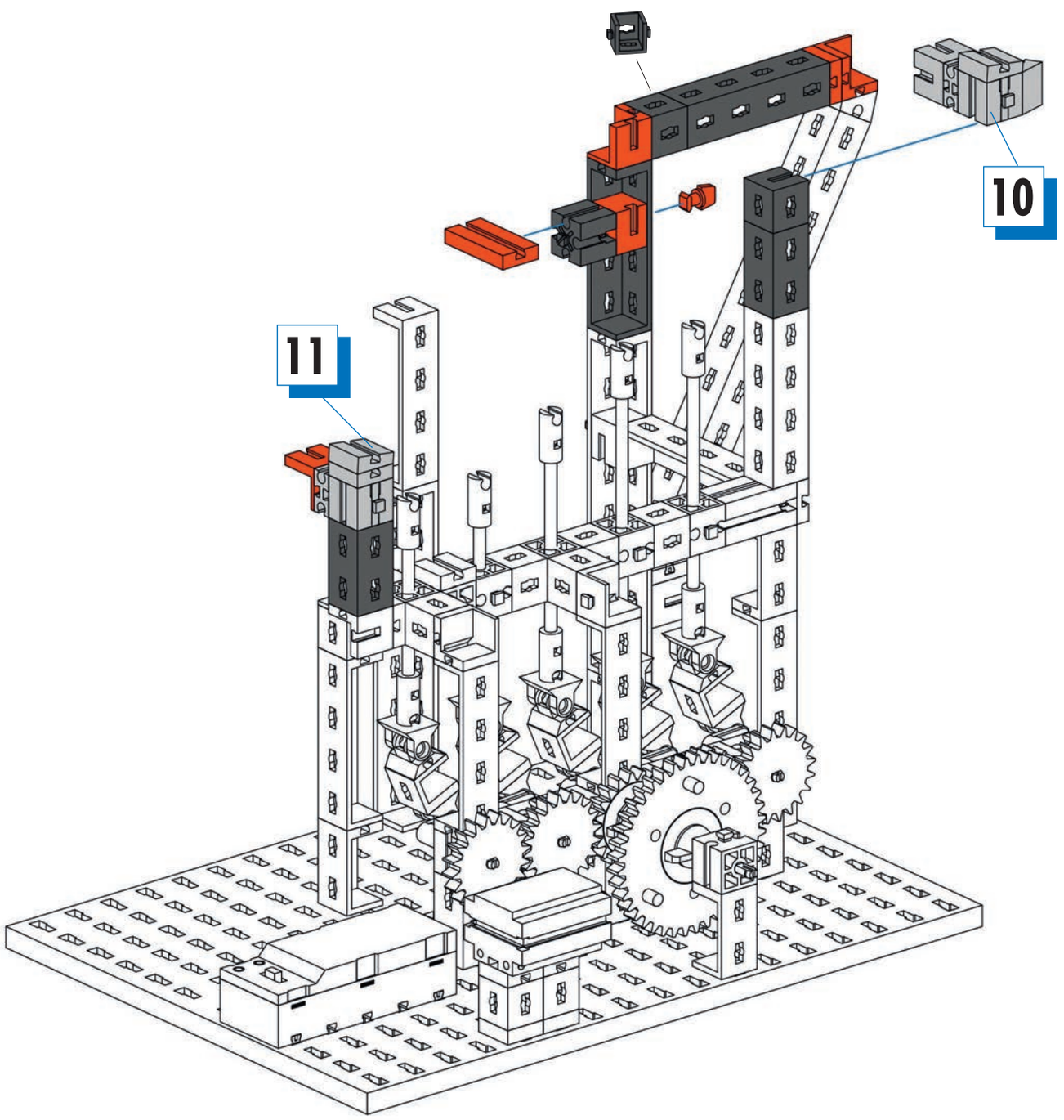
10
11

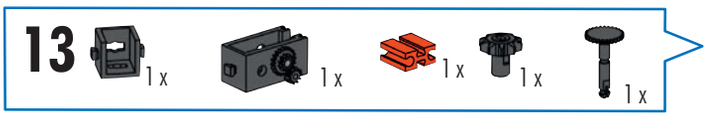
13
1 x
1 x
1 x
1 x
1 x

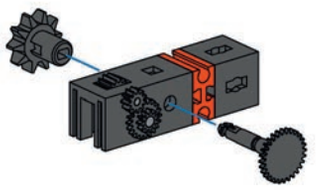

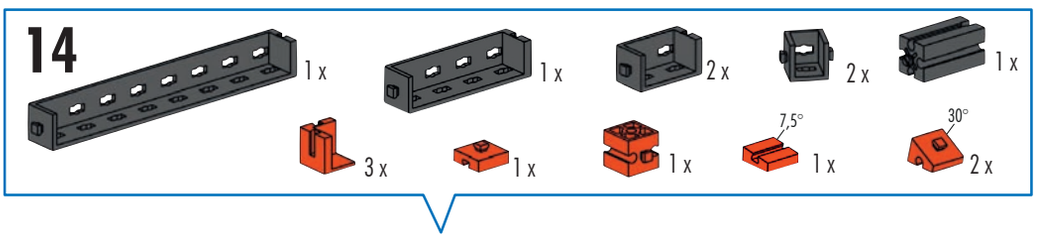
14
1 x
1 x
2 x
2 x
1 x
3 x
1 x
1 x
7,5°
1 x
30°
2 x

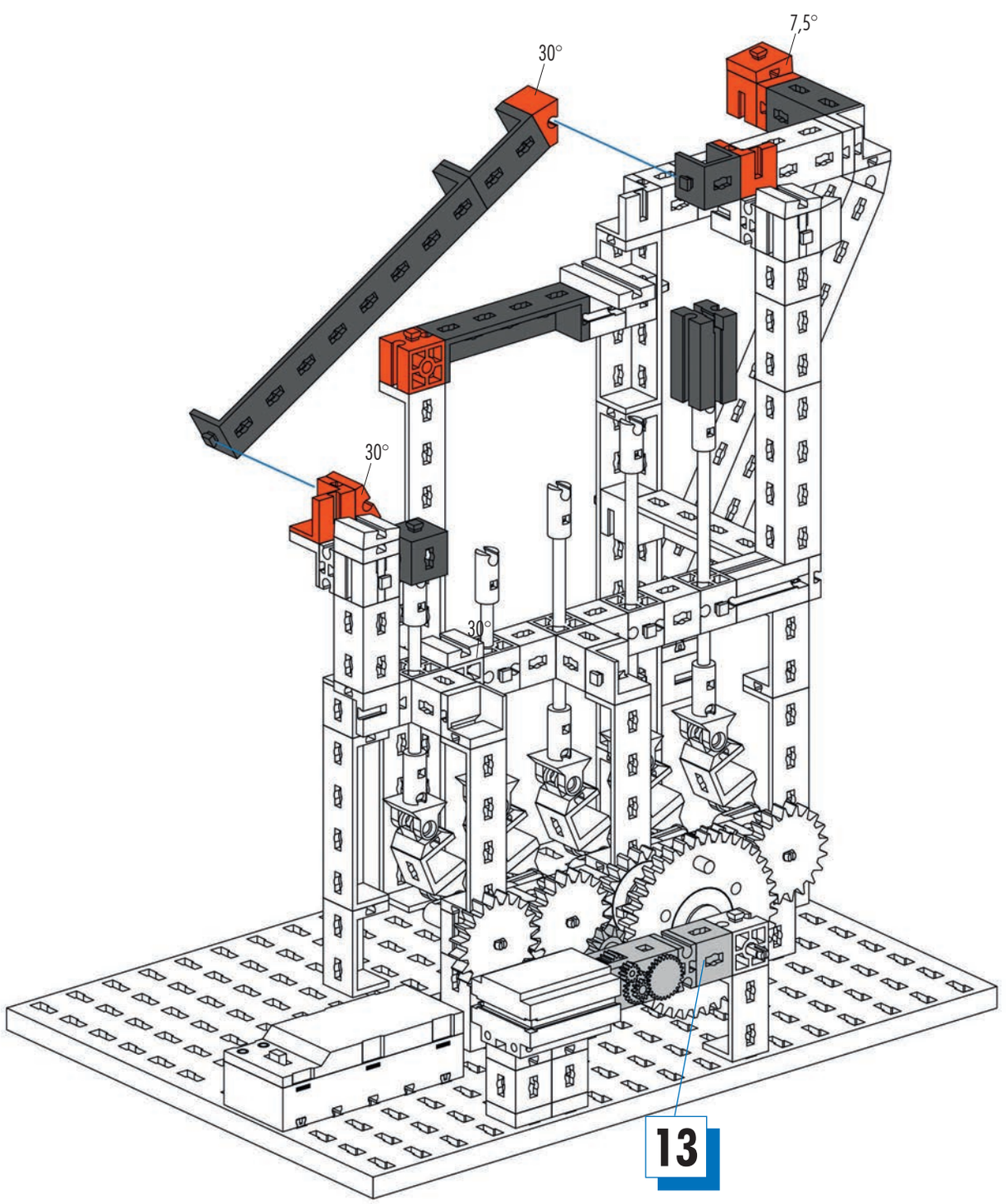
7,5°
30°
30°
30°
13

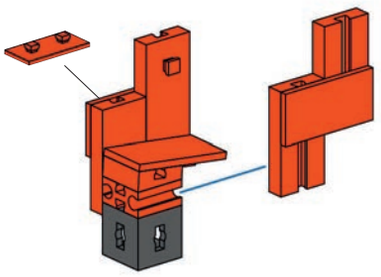

15

16

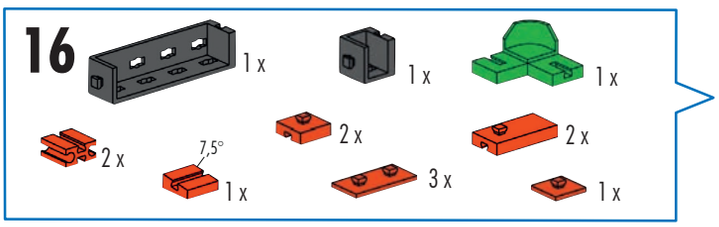

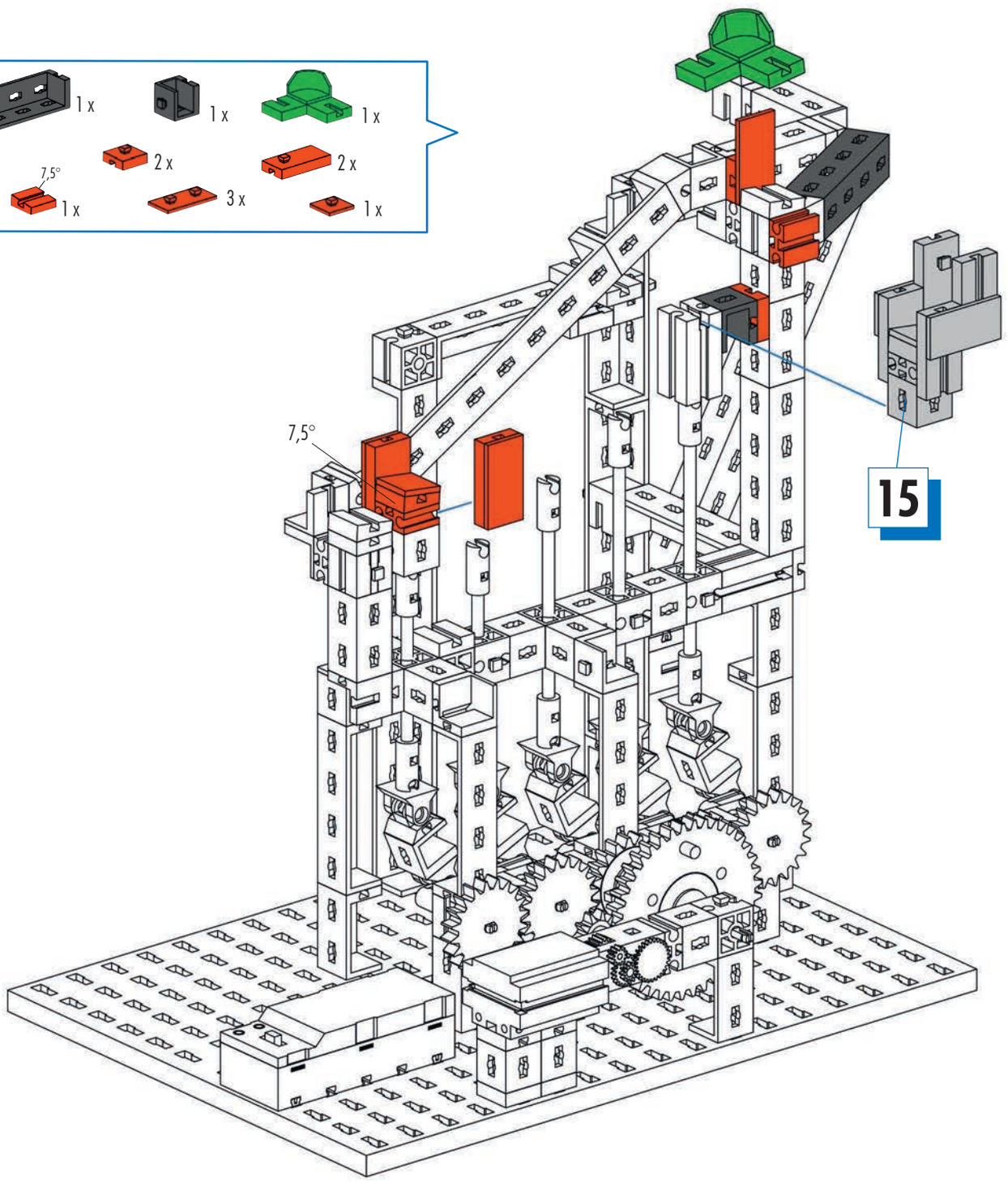

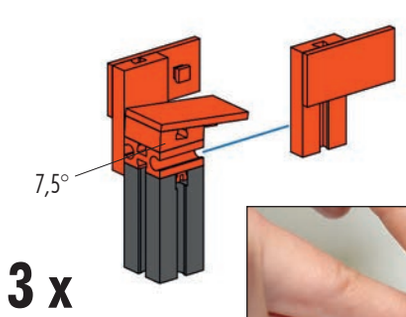

3 x

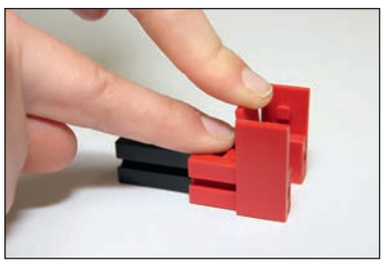

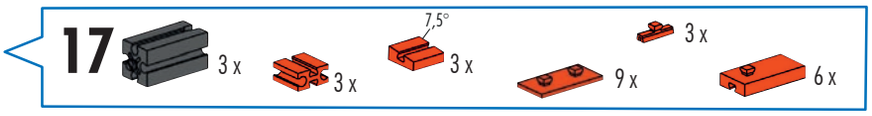

- Bauteile herunterdrücken damit keine Kante mehr vorhanden ist.
- Press component down so that edges are no longer present.
- Faire pression sur les éléments de construction jusqu'à ce qu'il n'y ait plus d'arête.
- Druk de onderdelen naar beneden zodat er geen rand meer is.
- Presionar los componentes hacia abajo para que ya no exista borde.
- Pressione os componentes para baixo, fazendo com que as bordas desapareçam.
- Spingere i componenti verso il basso affinché non rimangano bordi sporgenti.
- Надавите на детали, чтобы не было кромки.
- 将部件向下压入，由此可避免出现棱角。

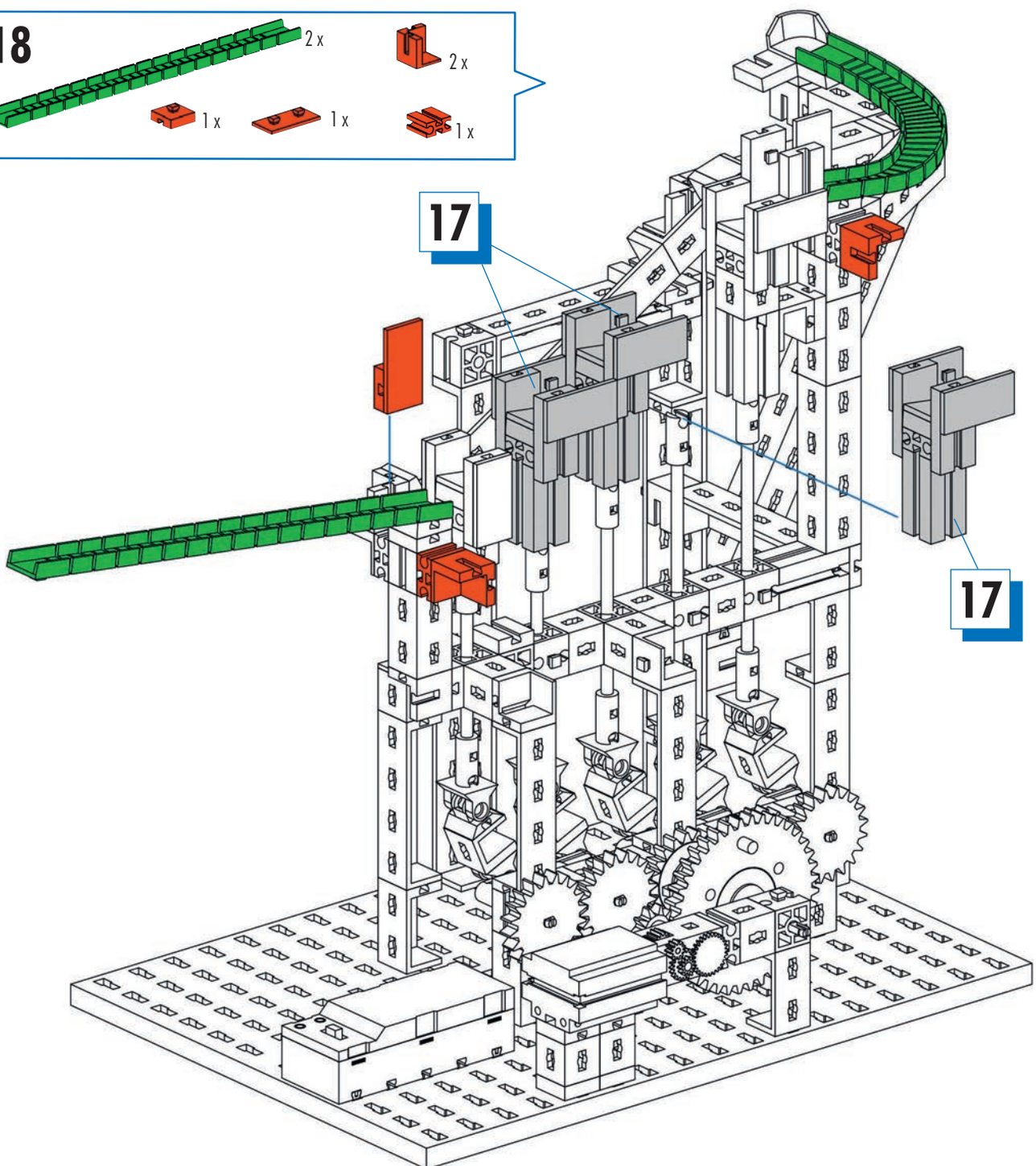

665

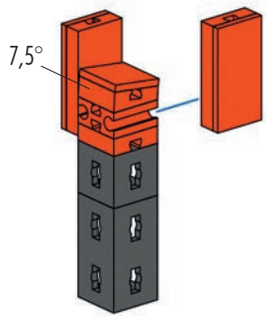
7,5°

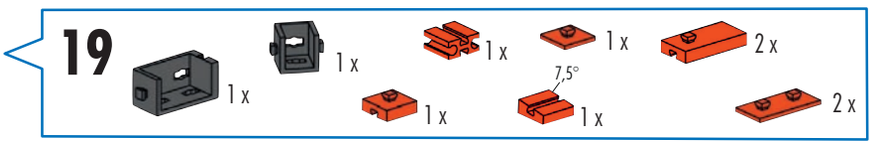
19
1 x
1 x
1 x
1 x
2 x
1 x
7,5°
1 x
2 x

20
1 x
1 x
1 x
Dynamic
1 x
2 x
2 x
2 x
2 x
2 x
30°
30
1 x
2 x
2 x

30 mm

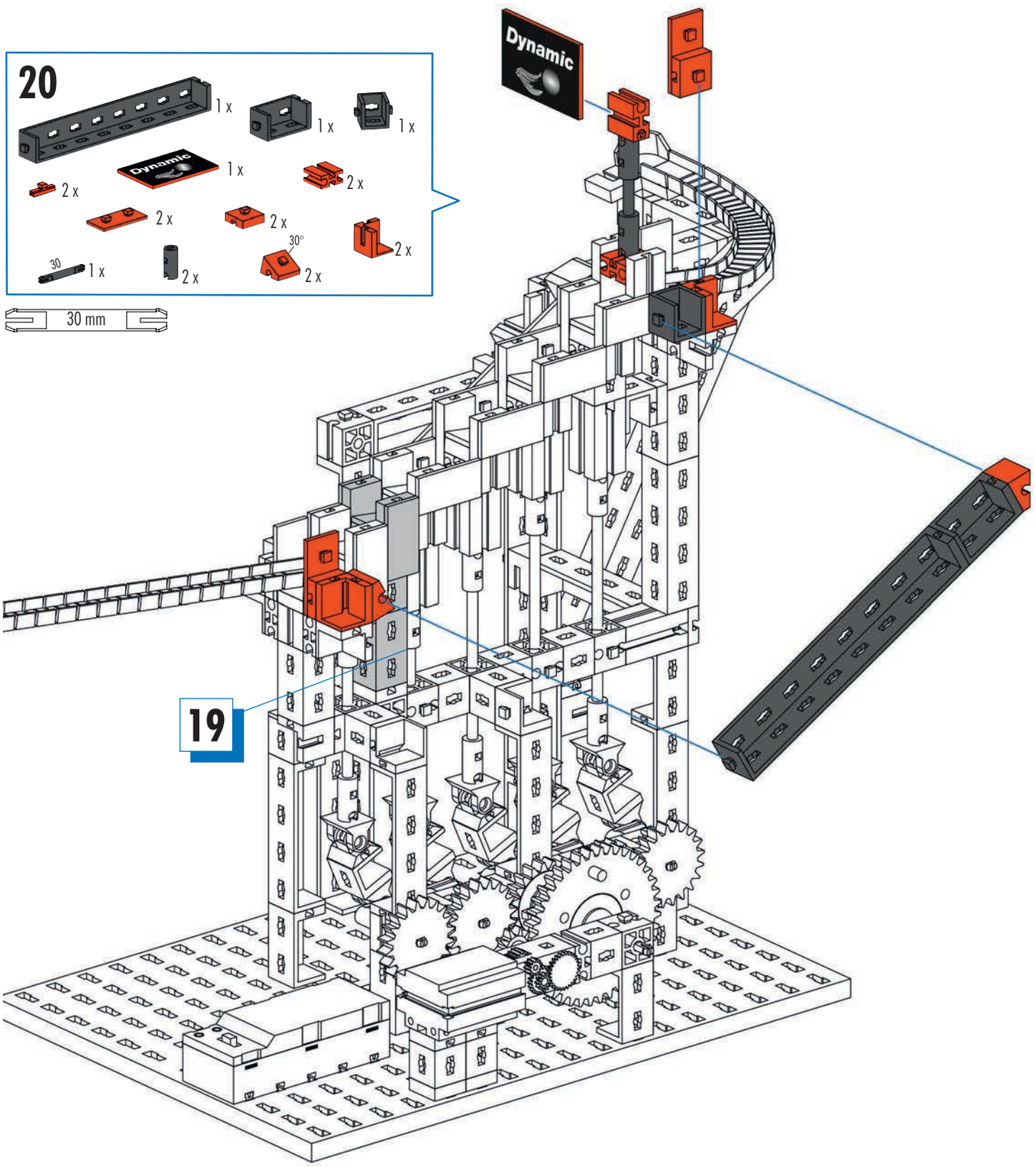
Dynamic
19

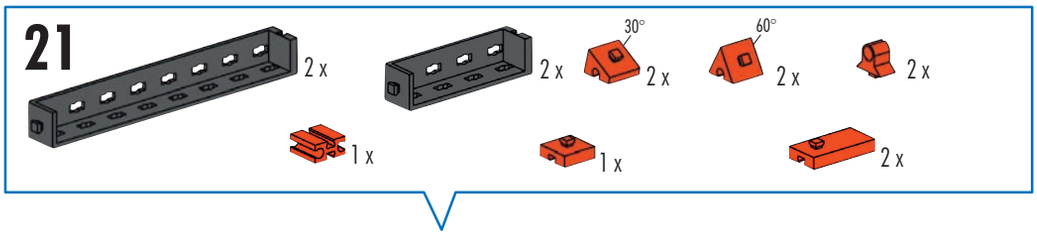
21
2 x
2 x
30°
2 x
60°
2 x
2 x
1 x
1 x
2 x

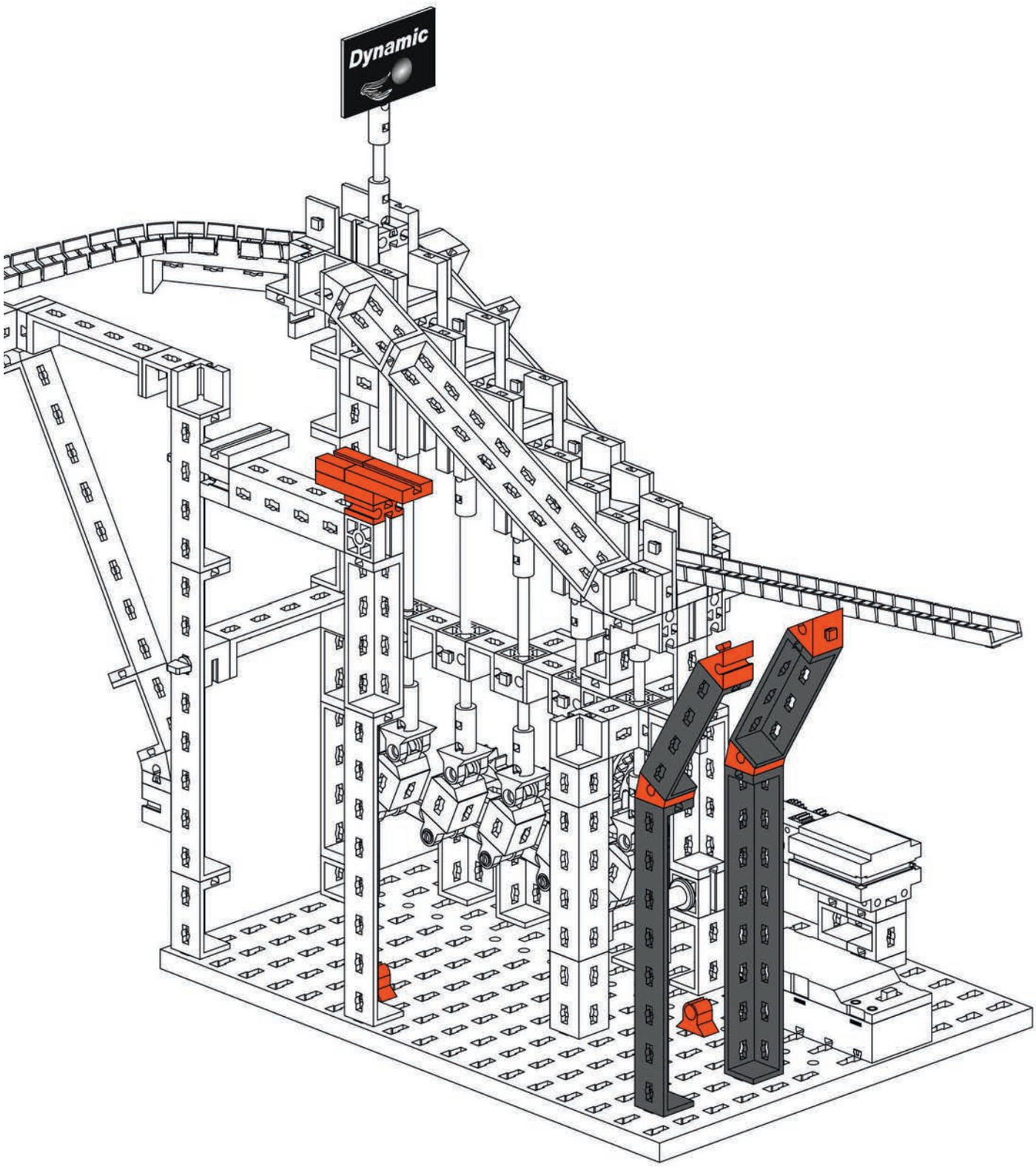
Dynamic

22

1 x 1 x 2 x 3 x 7,5° 1 x 30° 1 x 4 x 2 x 3 x 1 x

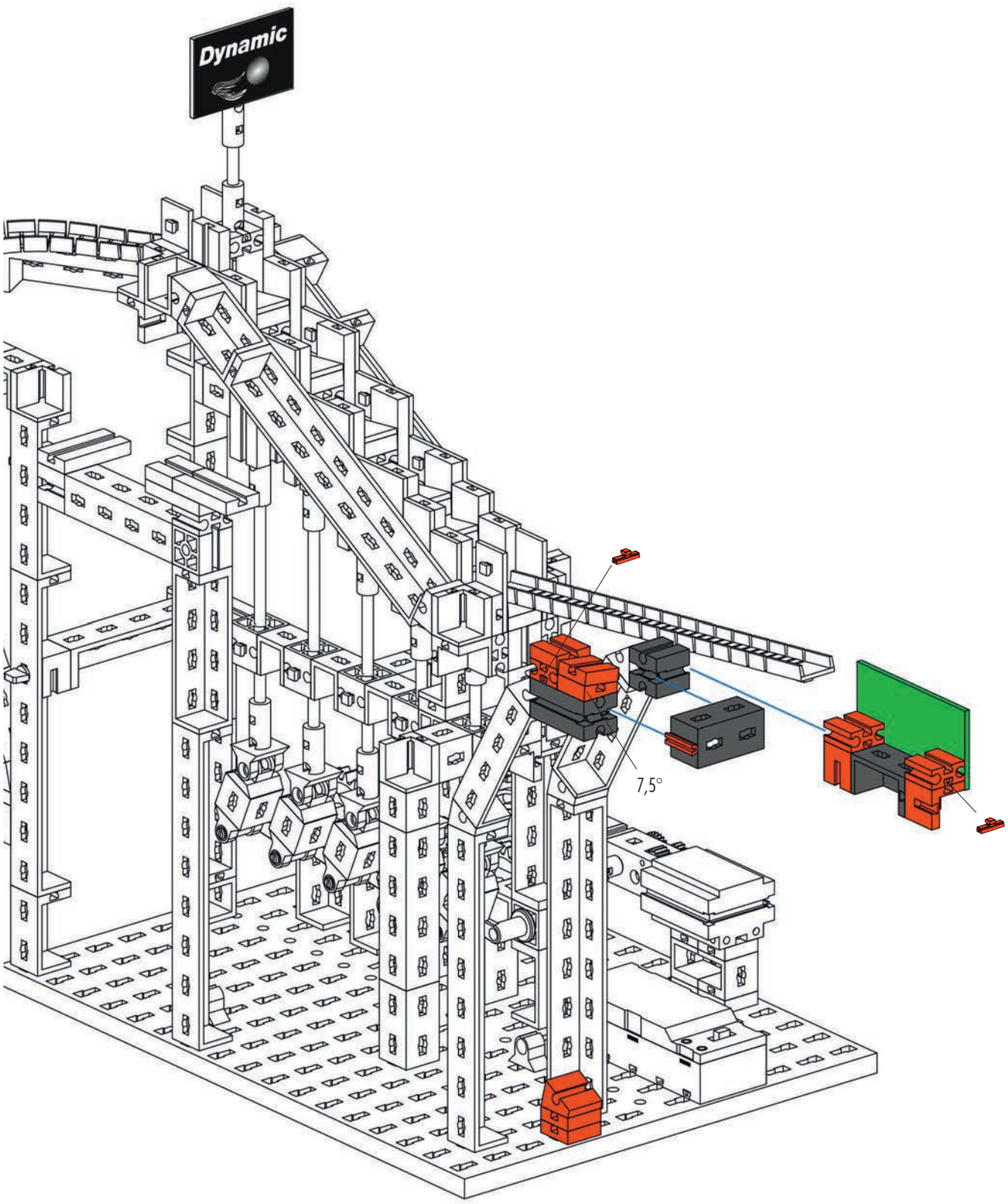

668

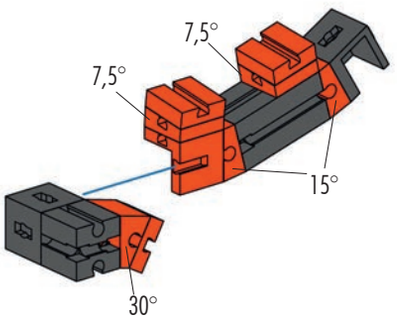
7,5°
7,5°
15°
30°

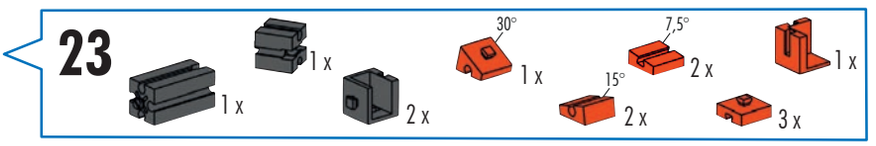
23
1 x
1 x
2 x
30°
1 x
7,5°
2 x
15°
2 x
1 x
3 x

24
2 x
1 x
1 x
1 x
1 x

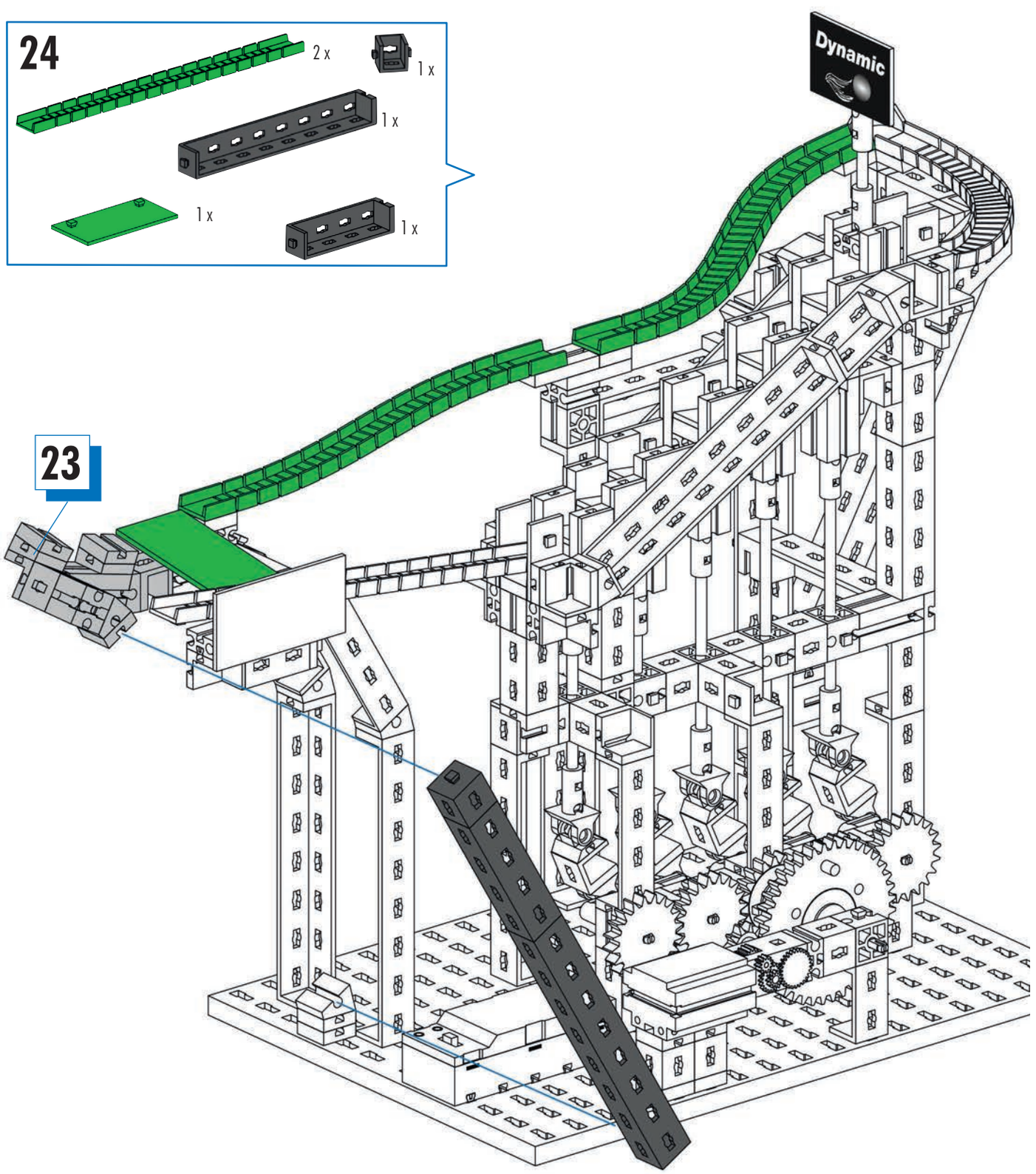
Dynamic
23

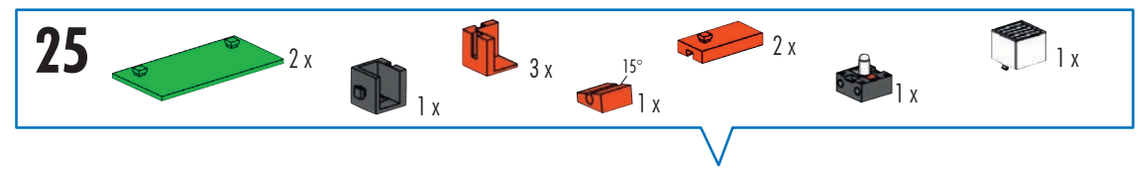
25
2 x
1 x
3 x
15°
1 x
2 x
1 x
1 x

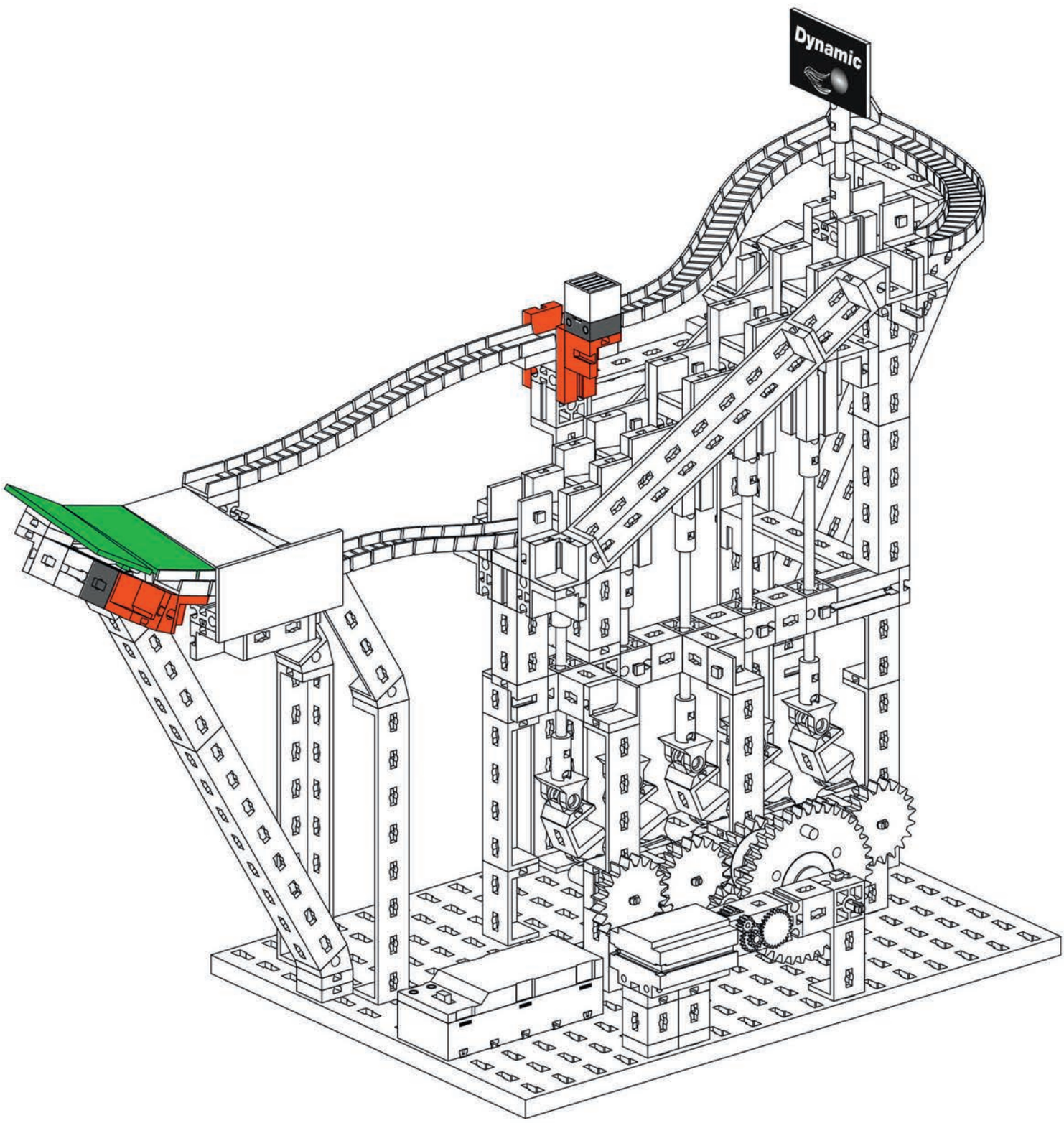
Dynamic

- Nicht mehr als 10 Kugeln verwenden!
- Do not use more than 10 balls!
- Ne jamais utiliser plus de 10 billes !
- Gebruik niet meer dan 10 kogels!
- ¡No emplear más de 10 bolas!
- Não utilize mais do que 10 esferas!
- Non utilizzare più di 10 sfere!
- Используйте не более 10 шариков!
- 最多使用 10 个钢珠 !

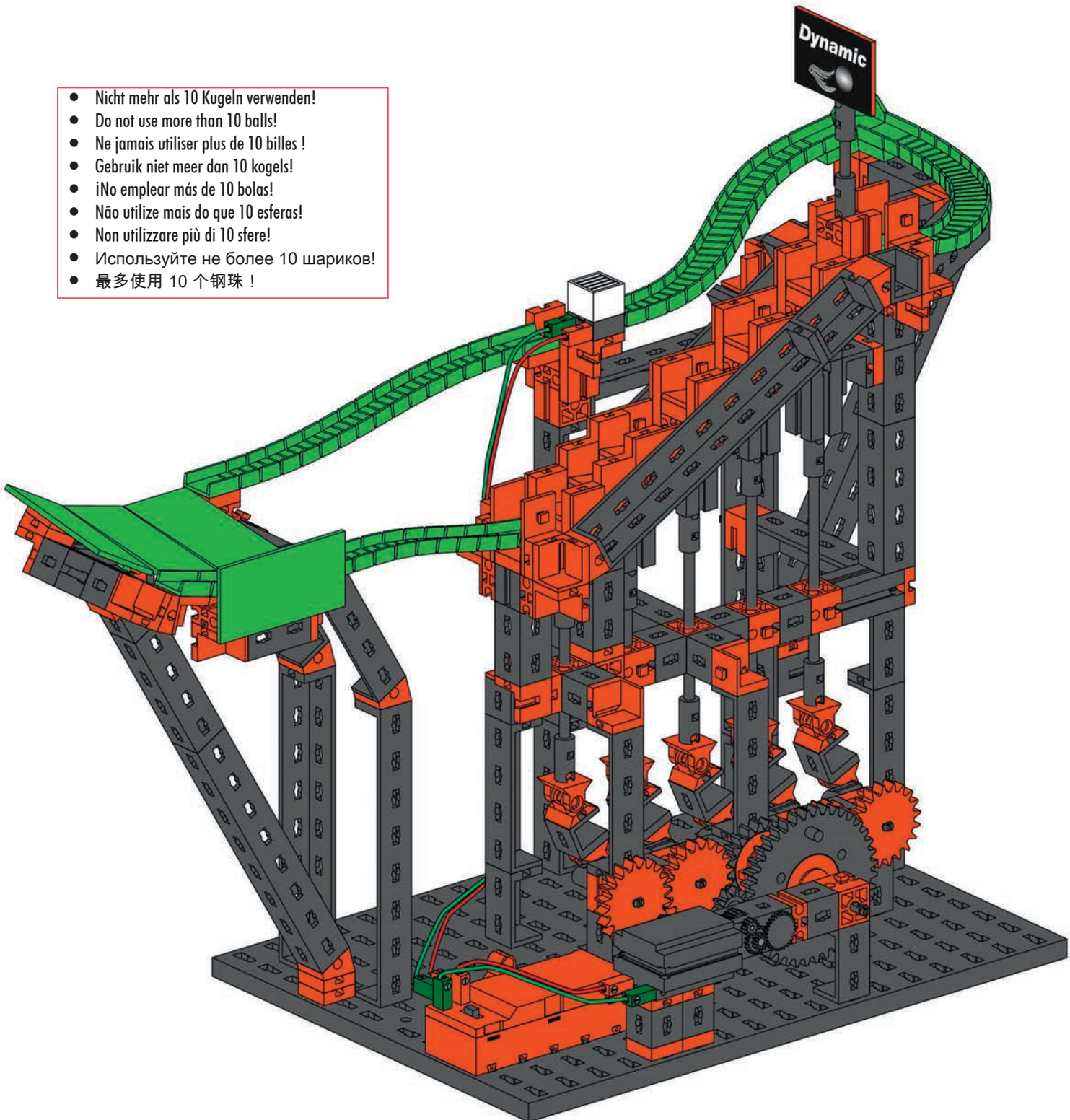

Schaltplan
Circuit diagram
Plan électrique

Schakelschema
Diagrama de circuitos
Plano elétrico de ligação

Schema elettrico
Схема подключения
电路图

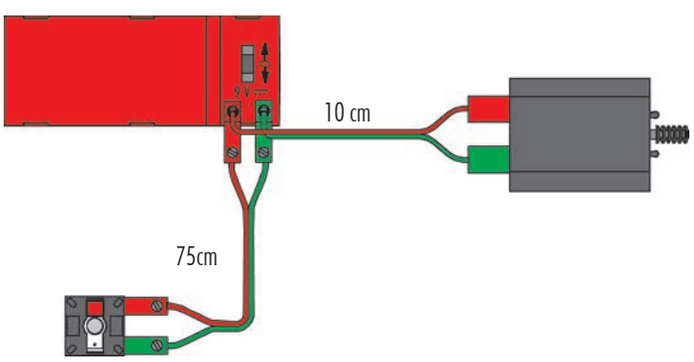

671

Stufenförderer
Stage conveyor
Transporteur vertical

Paternosterlift
Transportador de escalones
Transportadora de degraus

Convogliatore a gradini
Ступенчатый транспортёр
矿井升降机式输送机

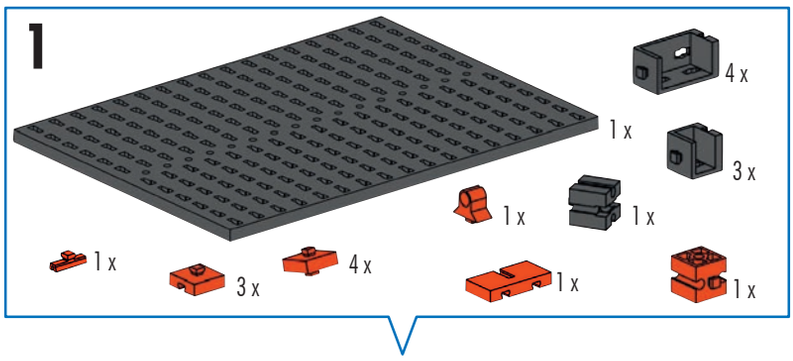

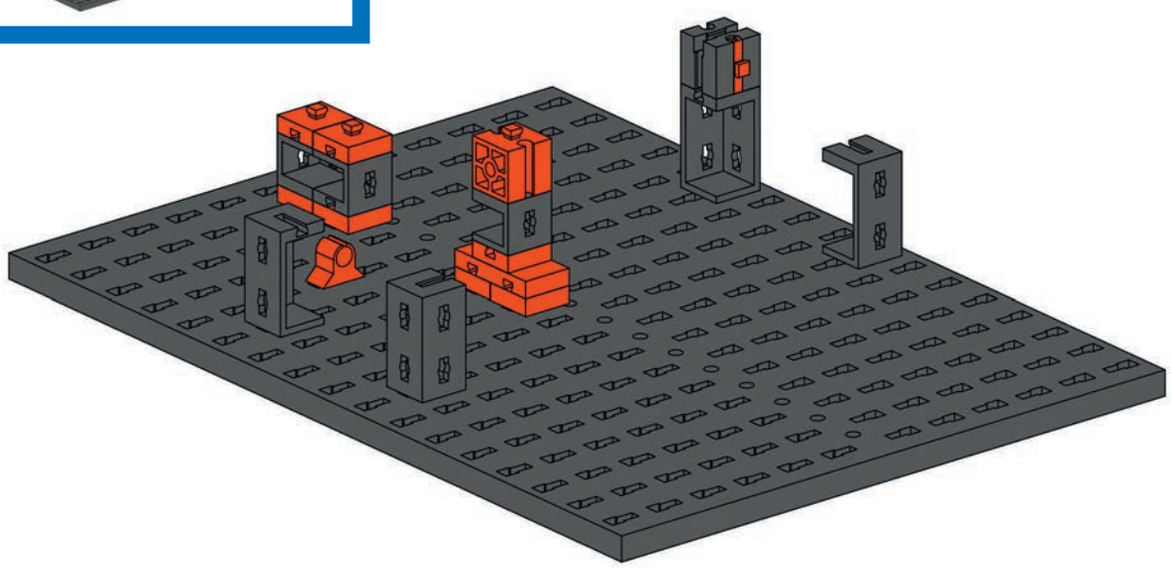

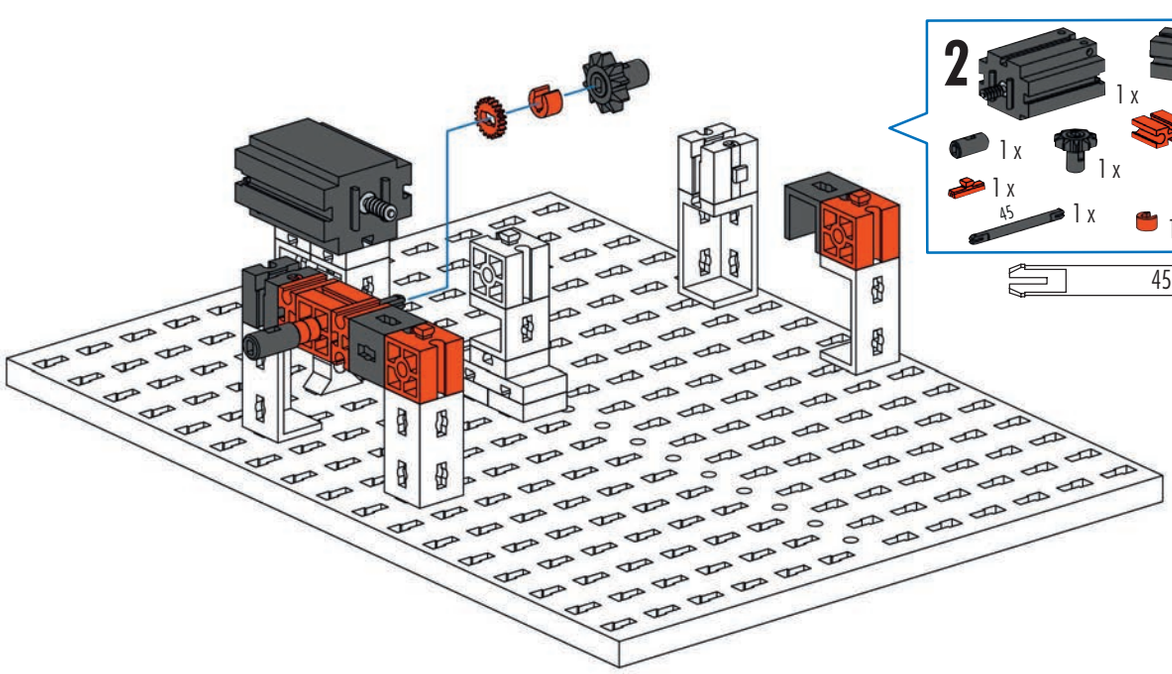

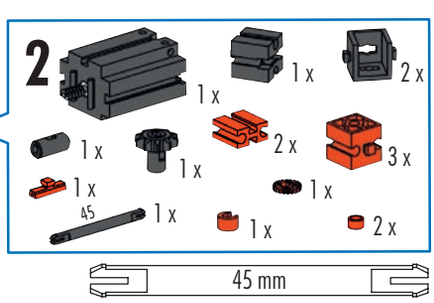

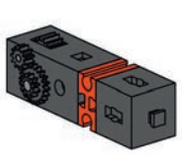

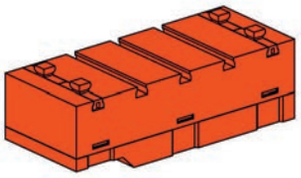

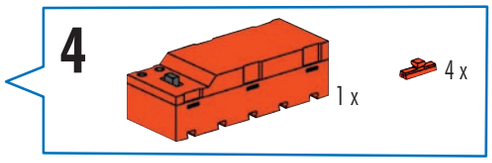
4
1 x
4 x

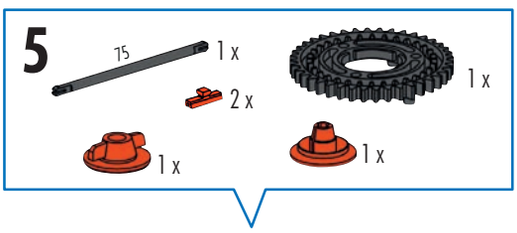
5
75
1 x
2 x
1 x
1 x
1 x

Nabenmuttern festdrehen
Fasten the hub nuts home
Serrer les écrous de moyeu
Draal de naafmoeren vast
Atornillar las tuercas laterales
Apertar bem as porcas de cubo
Stringere i dadi dei mozzi
Затянуть гайки ступиц
拧紧

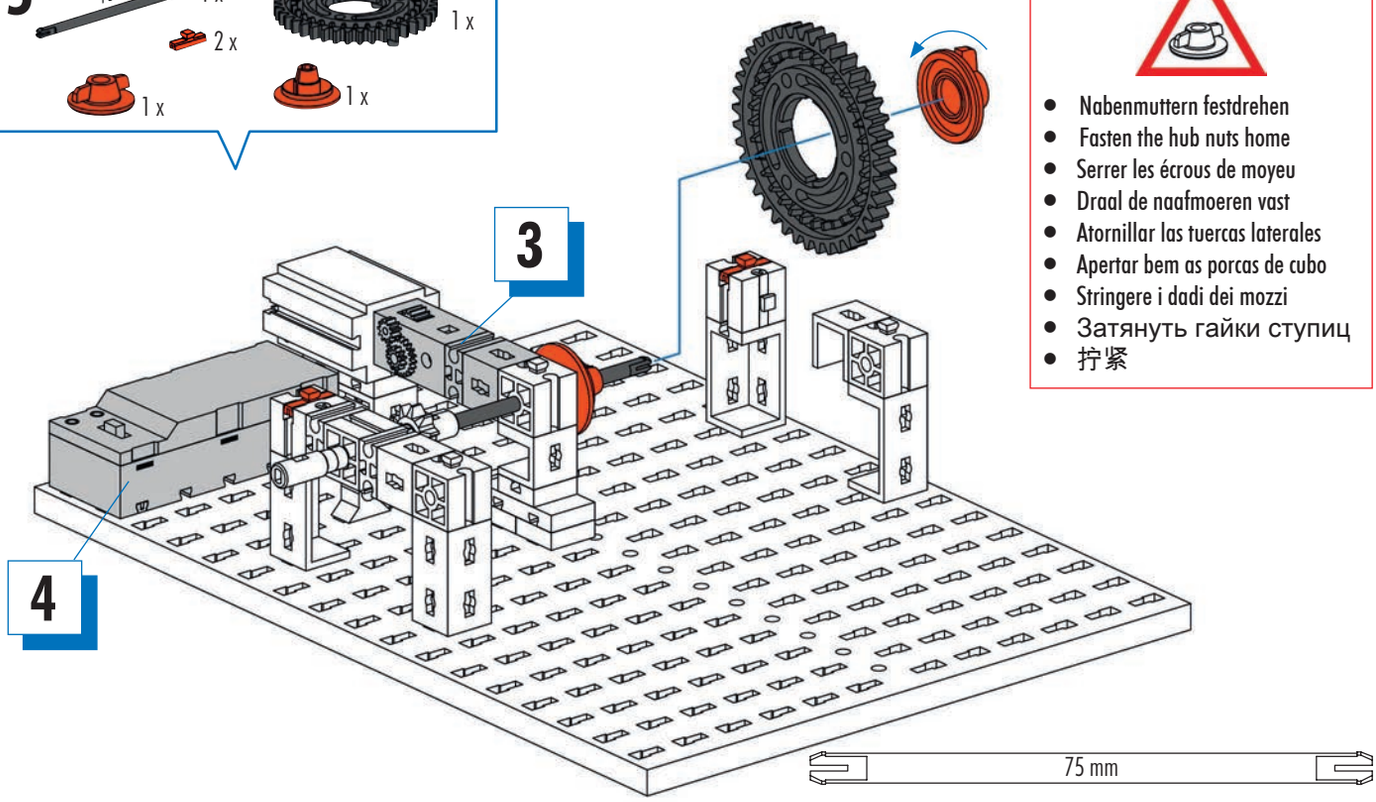
3
4
75 mm

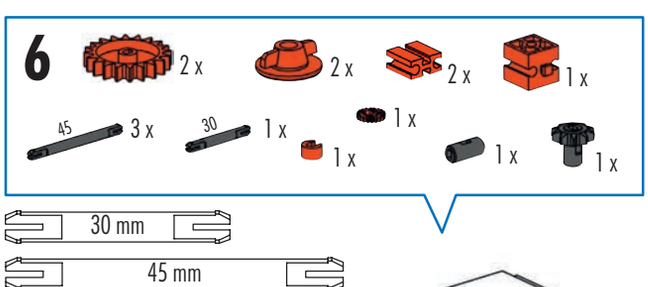
6
2 x
2 x
2 x
1 x
45
3 x
30
1 x
1 x
1 x
1 x
1 x
30 mm
45 mm

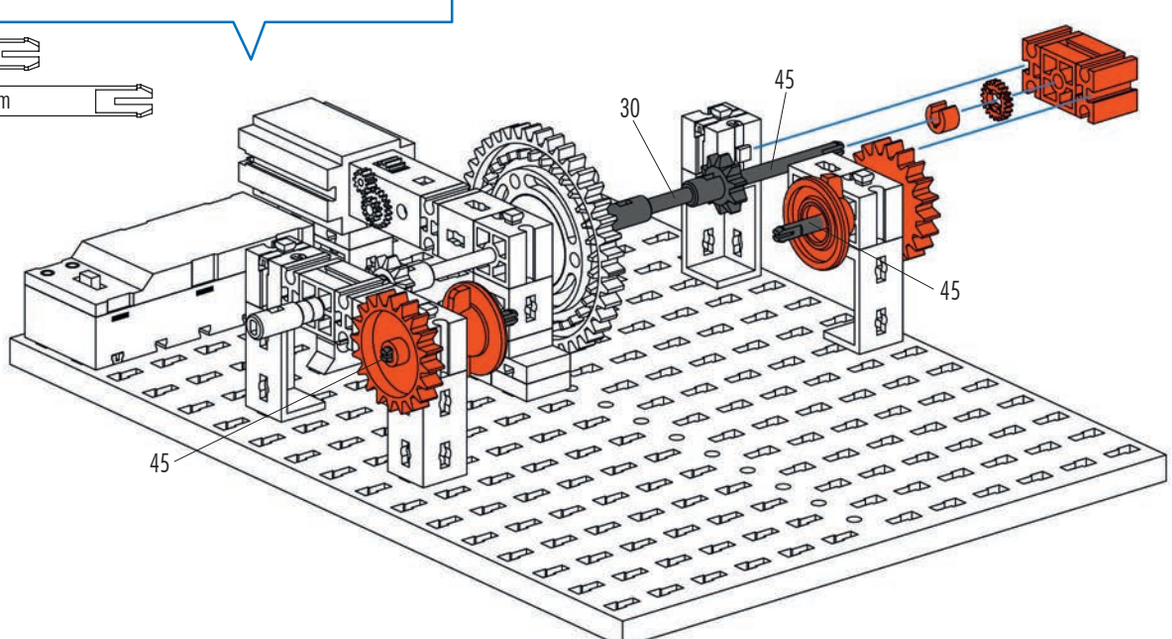
45
30
45
45
45

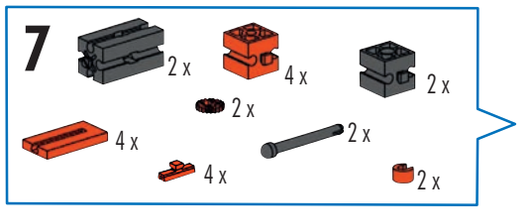
7
2 x
4 x
2 x
2 x
4 x
2 x
4 x
2 x

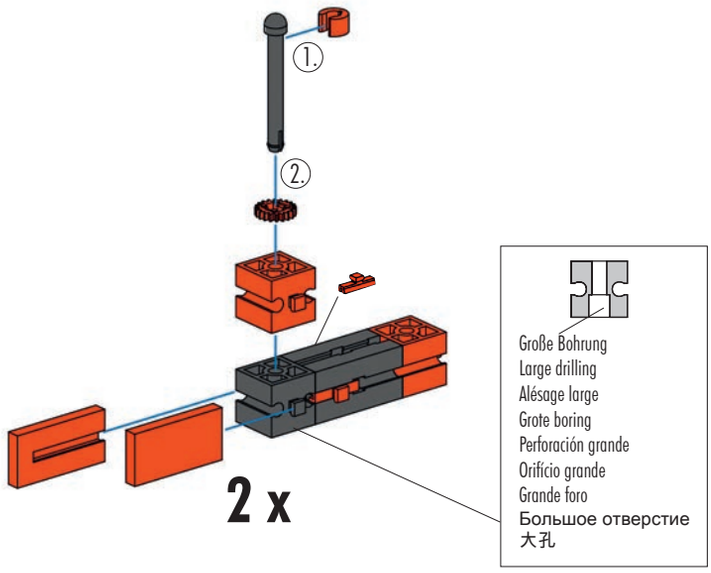
1.
2.
2 x
Große Bohrung
Large drilling
Alésage large
Grote boring
Perforación grande
Orifício grande
Grande foro
Большое отверстие
大孔

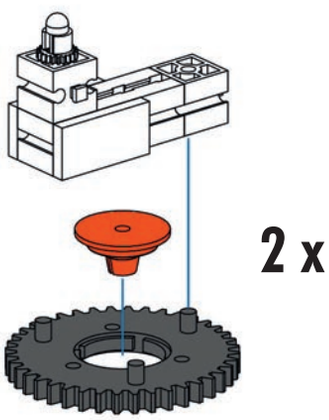
2 x

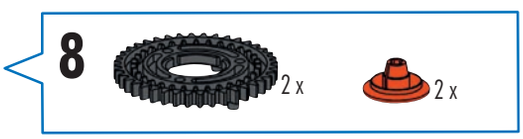
8
2 x
2 x

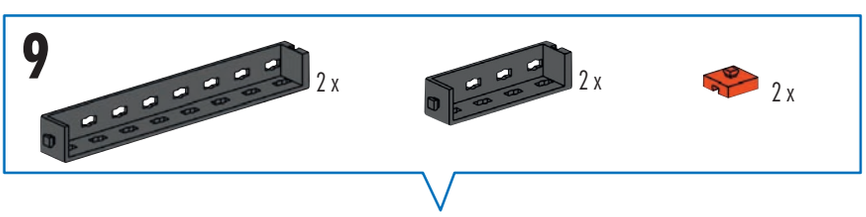
9
2 x
2 x
2 x

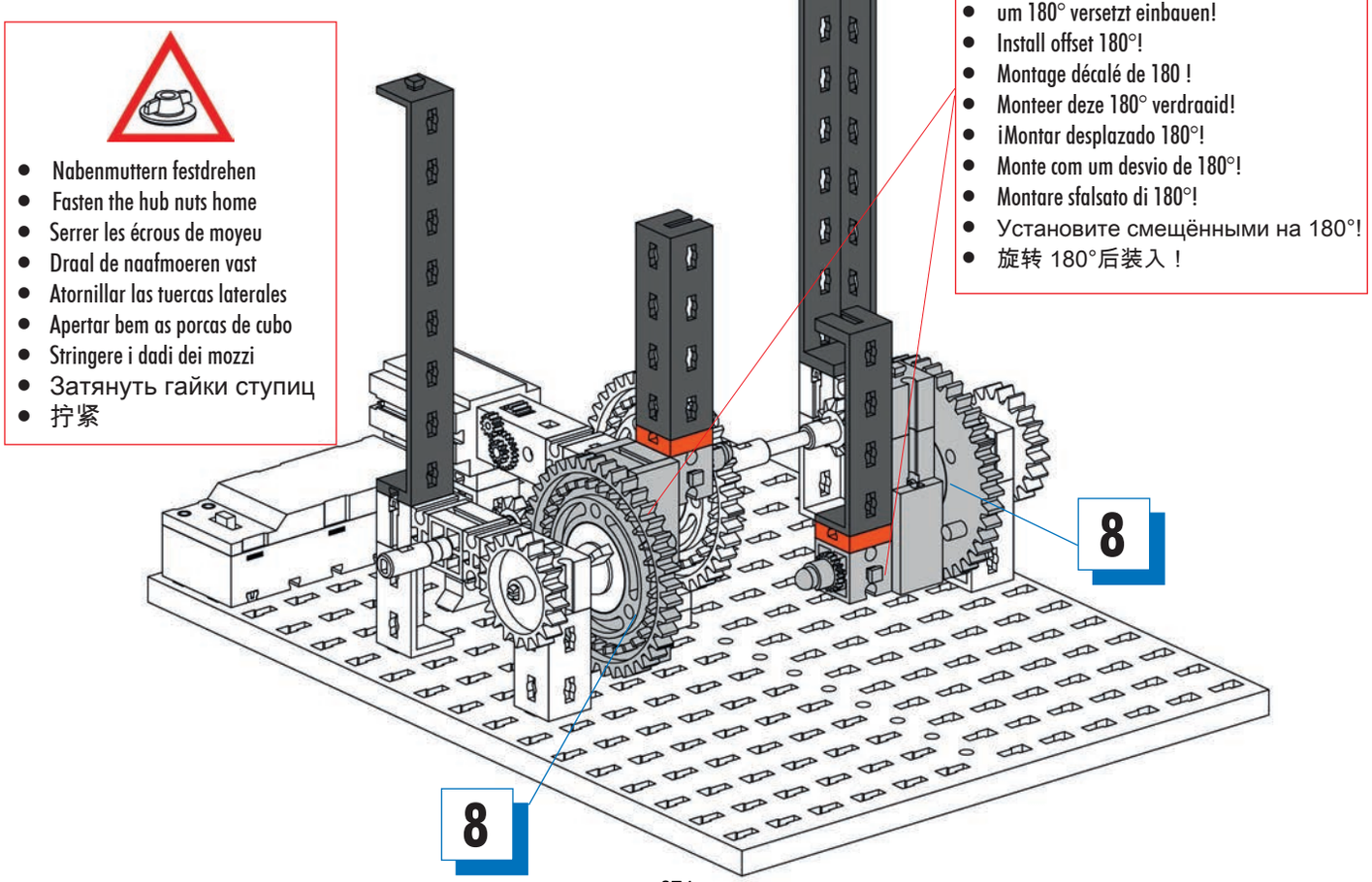
Nabenmuttern festdrehen
Fasten the hub nuts home
Serrer les écrous de moyeu
Draal de naafmoeren vast
Atornillar las tuercas laterales
Apertar bem as porcas de cubo
Stringere i dadi dei mozzi
Затянуть гайки ступиц
拧紧
um 180° versetzt einbauen!
Install offset 180°!
Montage décalé de 180 !
Monteer deze 180° verdraaid!
¡Montar desplazado 180°!
Monte com um desvio de 180°!
Montare sfalsato di 180°!
Установите смещёнными на 180°!
旋转 180°后装入 !
8
8

674

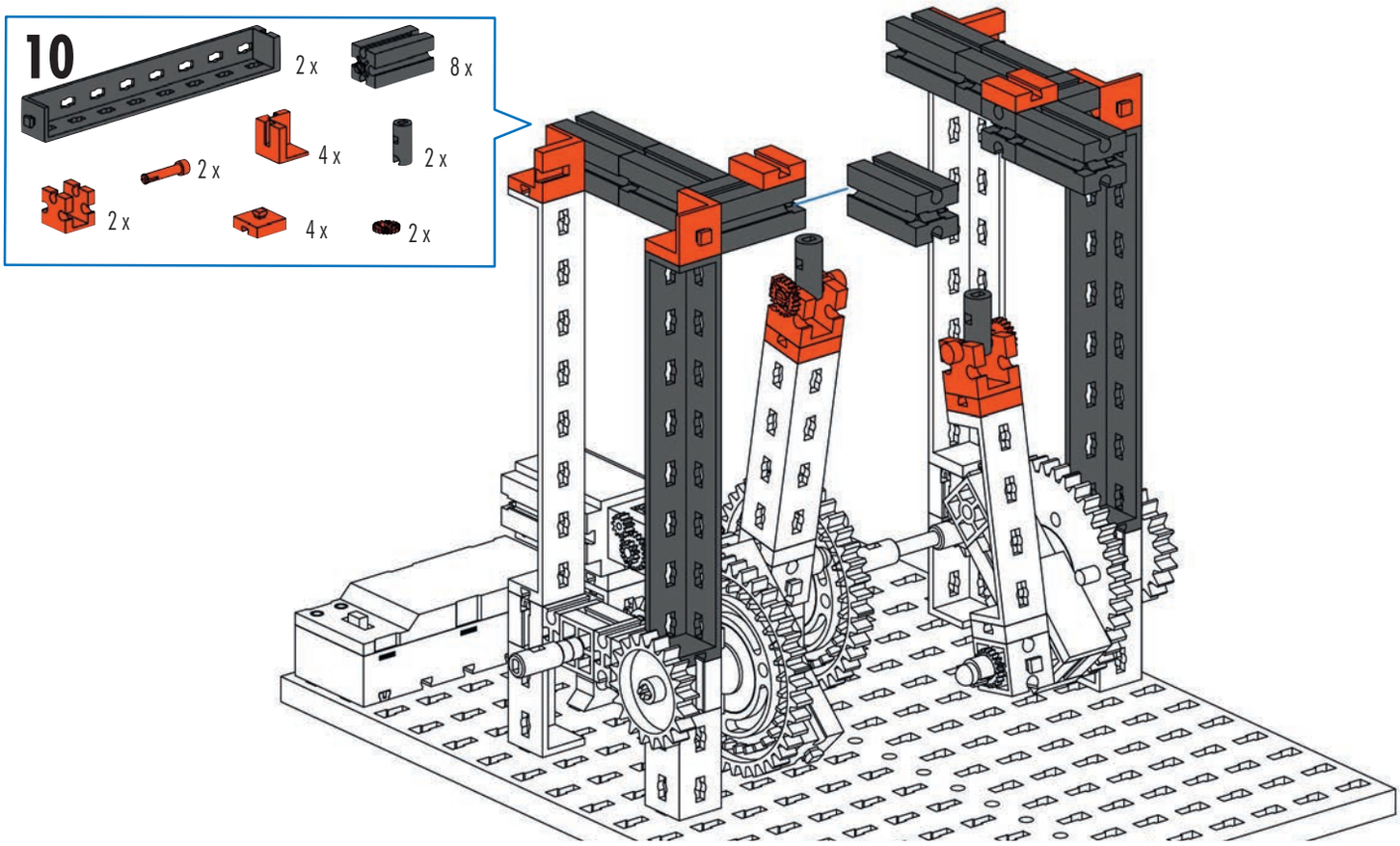

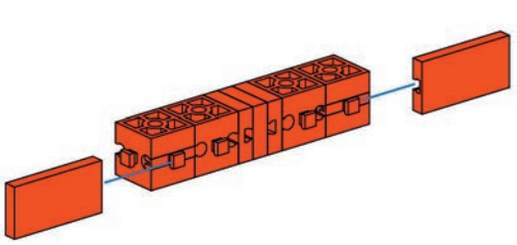

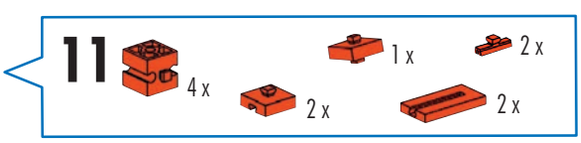

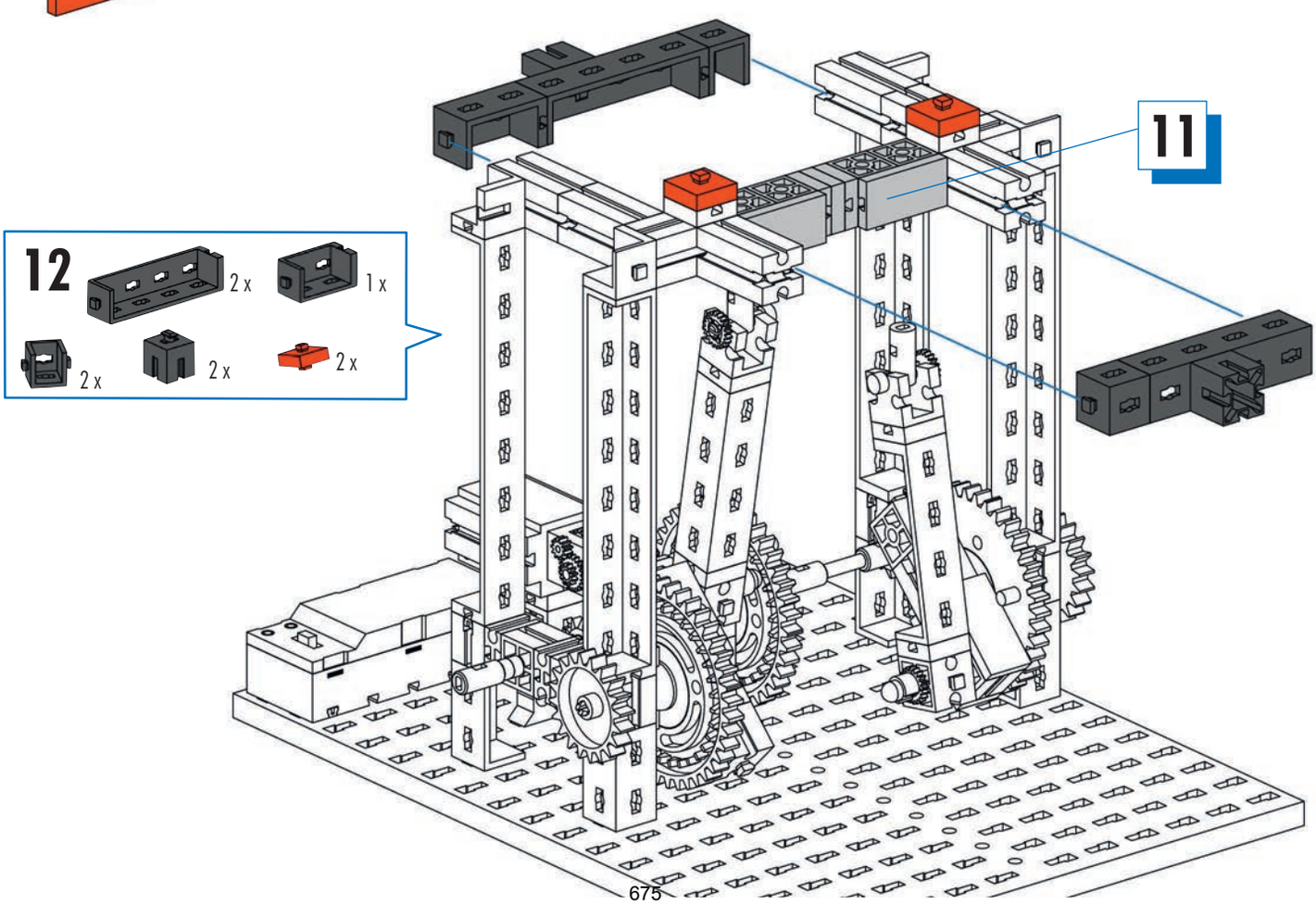

675

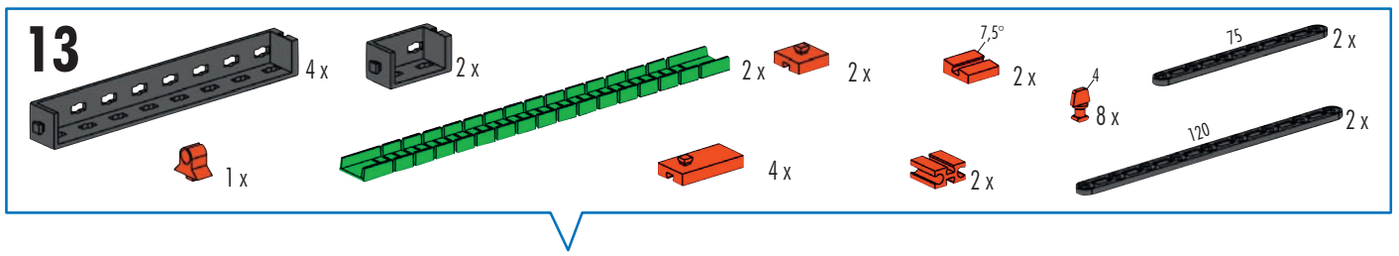

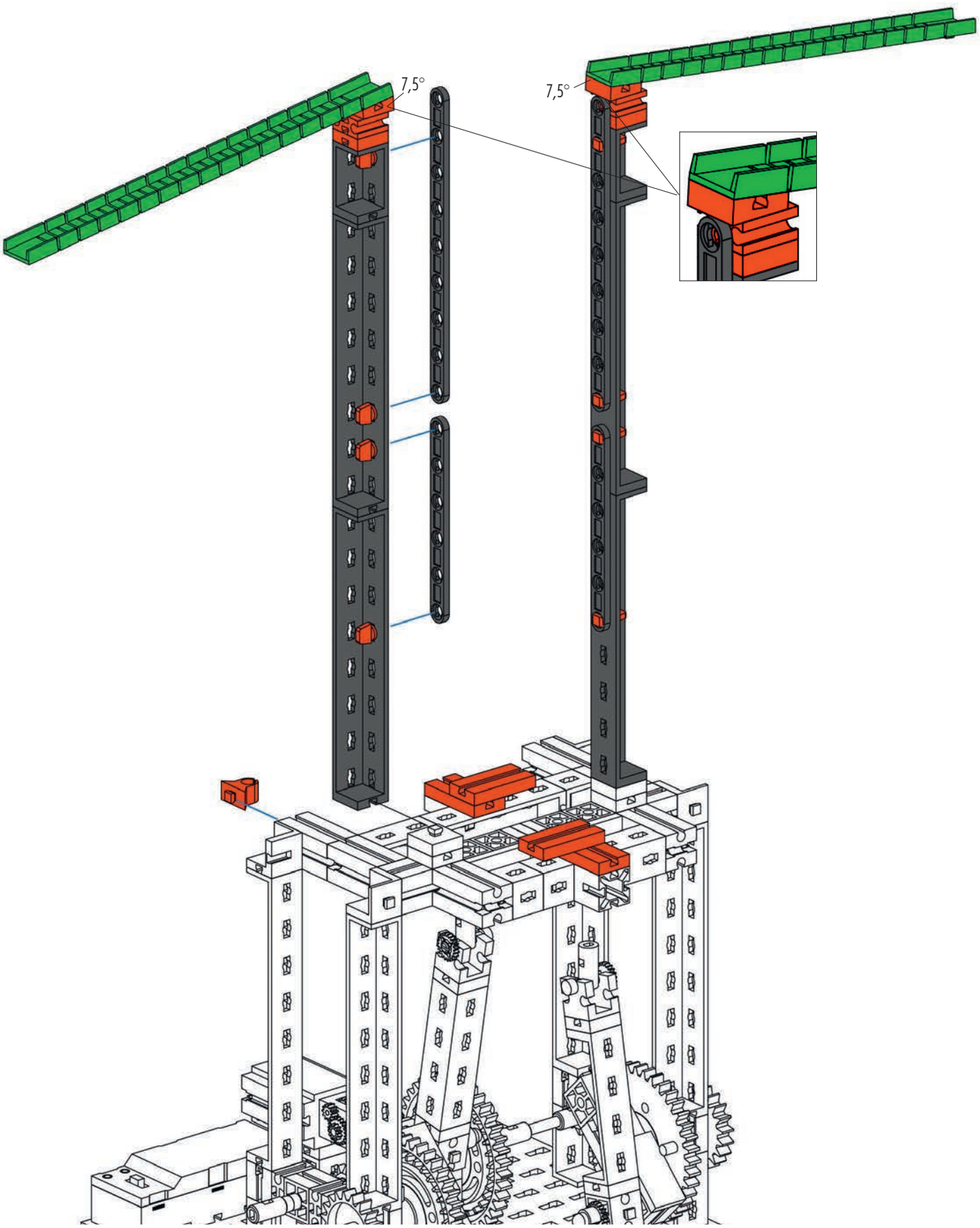

676

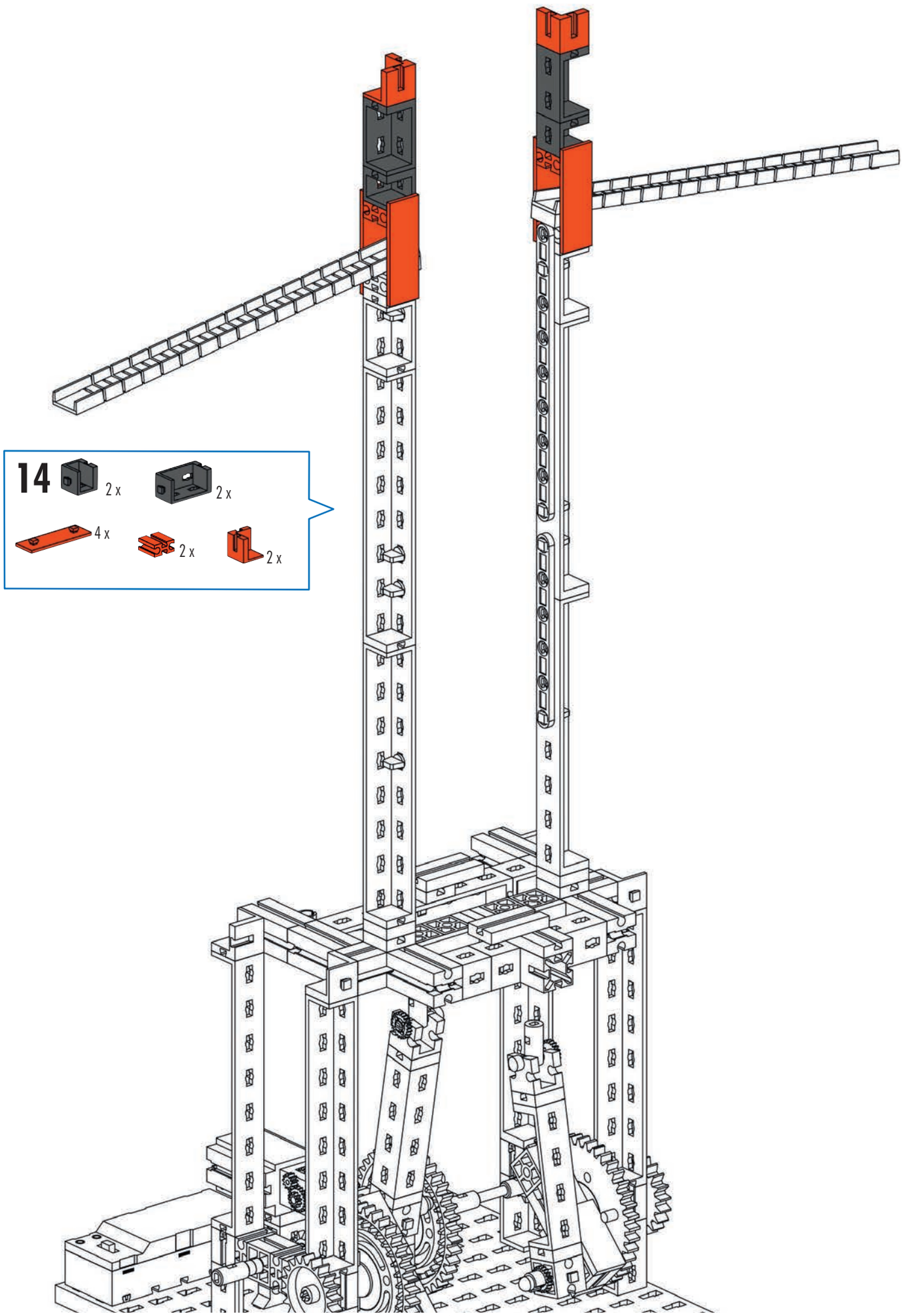

677

16 x

15

32 x

16 x

16

45

8 x

4

24 x

120

16 x

4 x

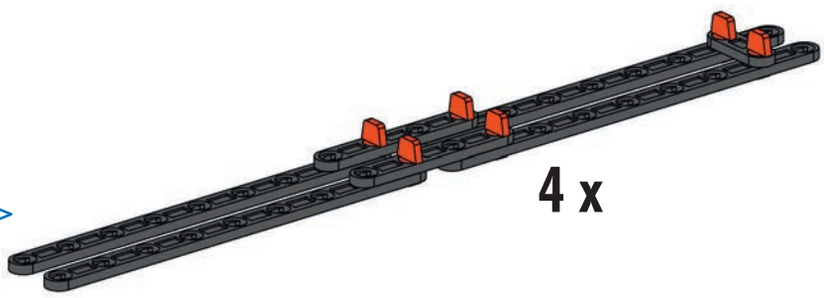

4 x

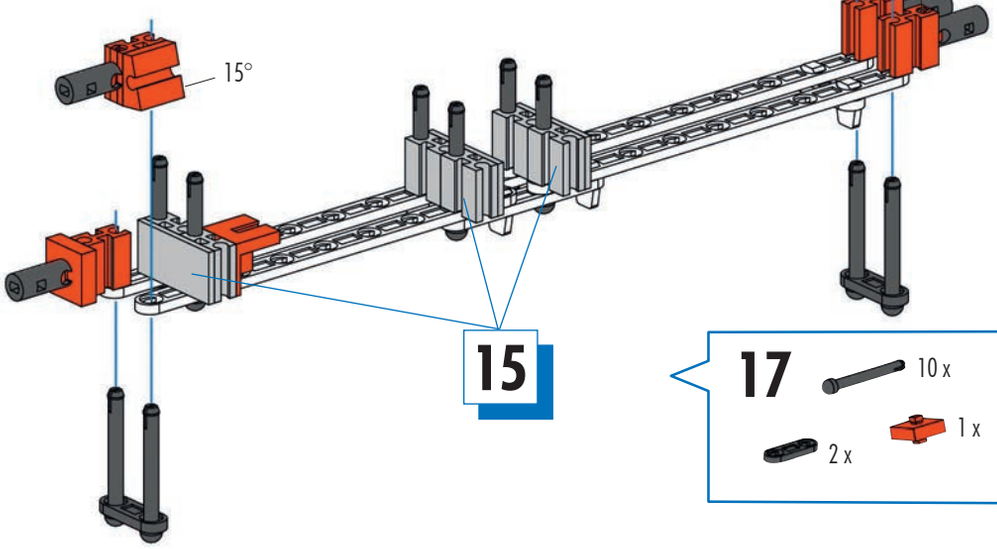

15°

15

17

10 x

4 x

1 x

4 x

1 x

2 x

15°

1 x

3 x

18

10 x

2 x

1 x

20 x

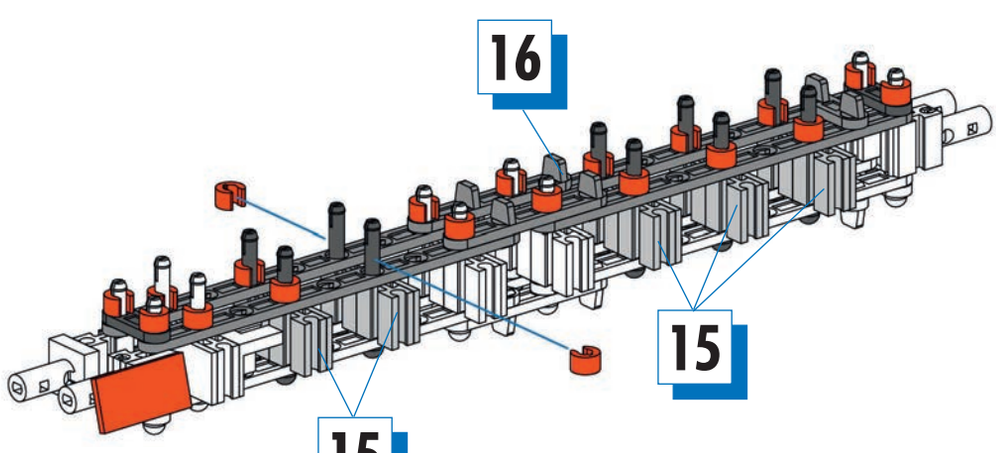

16

15

15

678

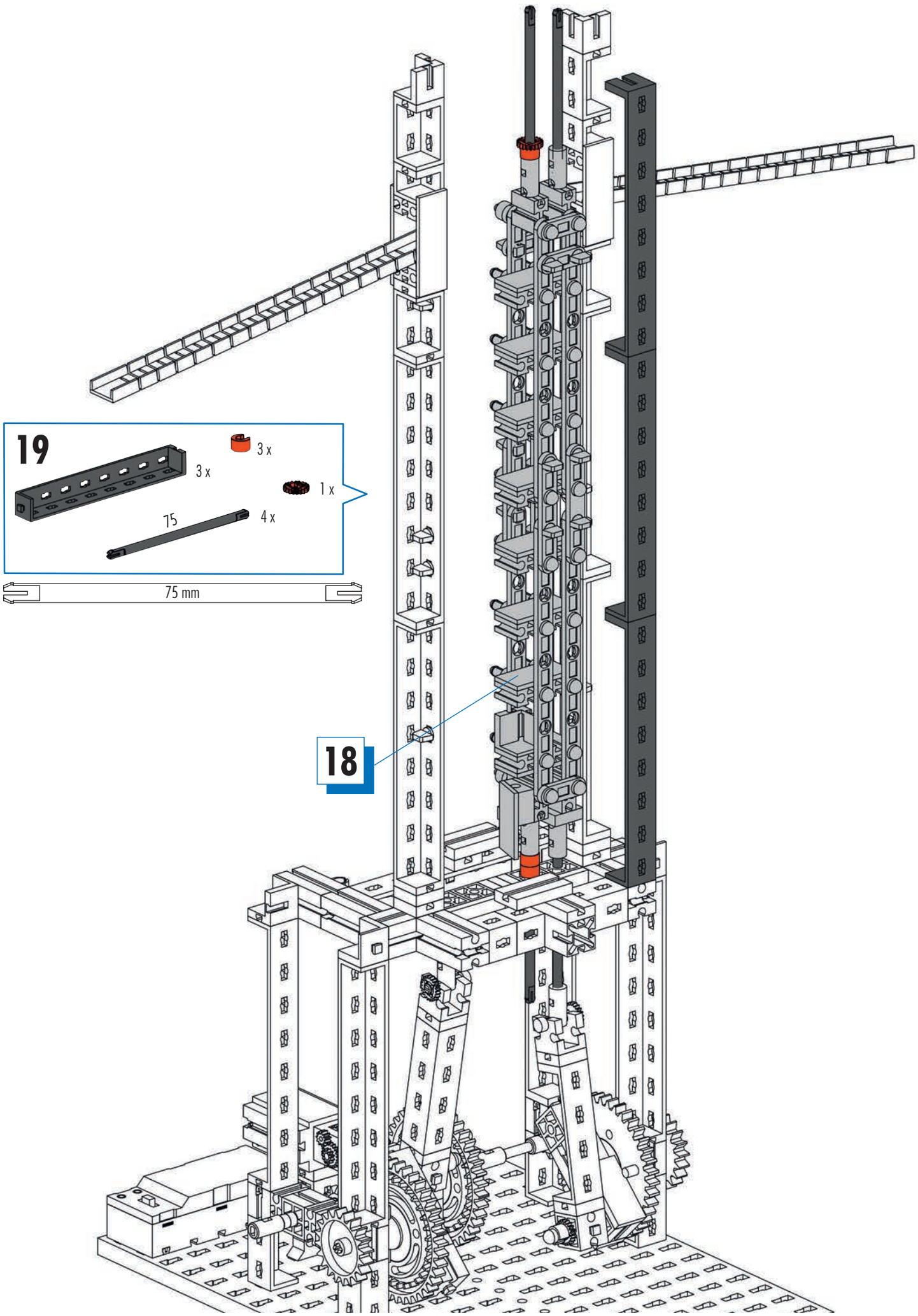

679

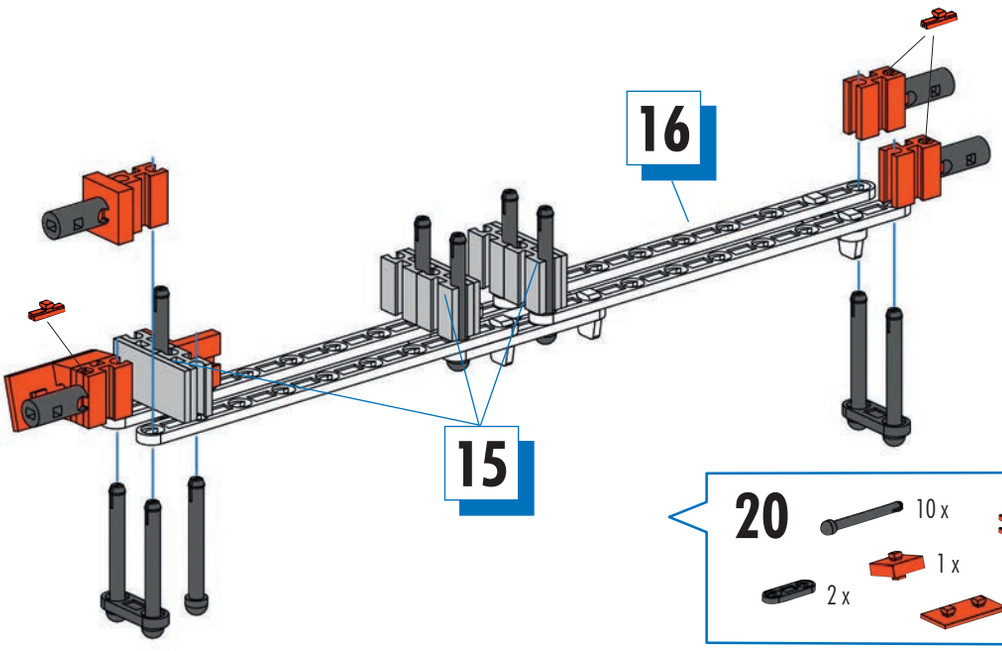
16
15

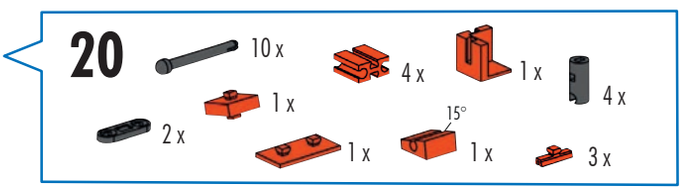
20
10 x
4 x
1 x
4 x
1 x
2 x
1 x
15°
1 x
3 x

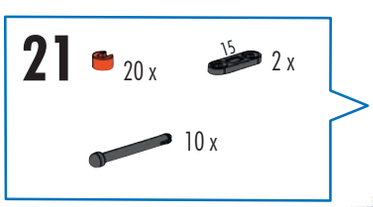
21
20 x
15
2 x
10 x

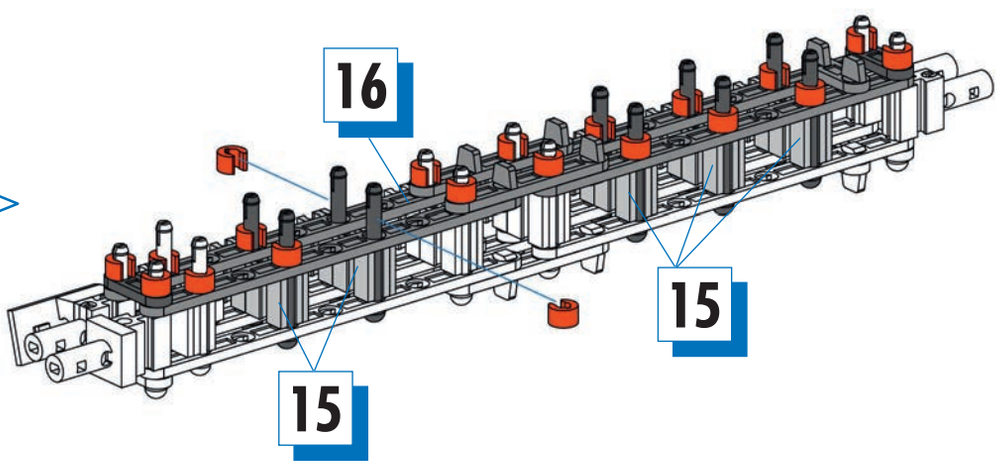
16
15
15

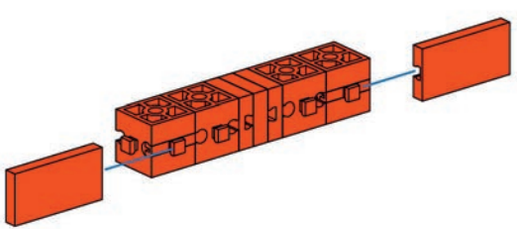

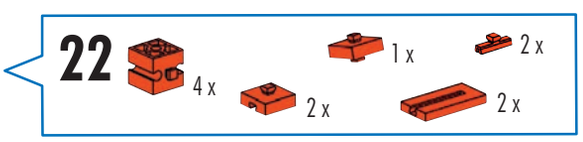
22
4 x
1 x
2 x
2 x
2 x

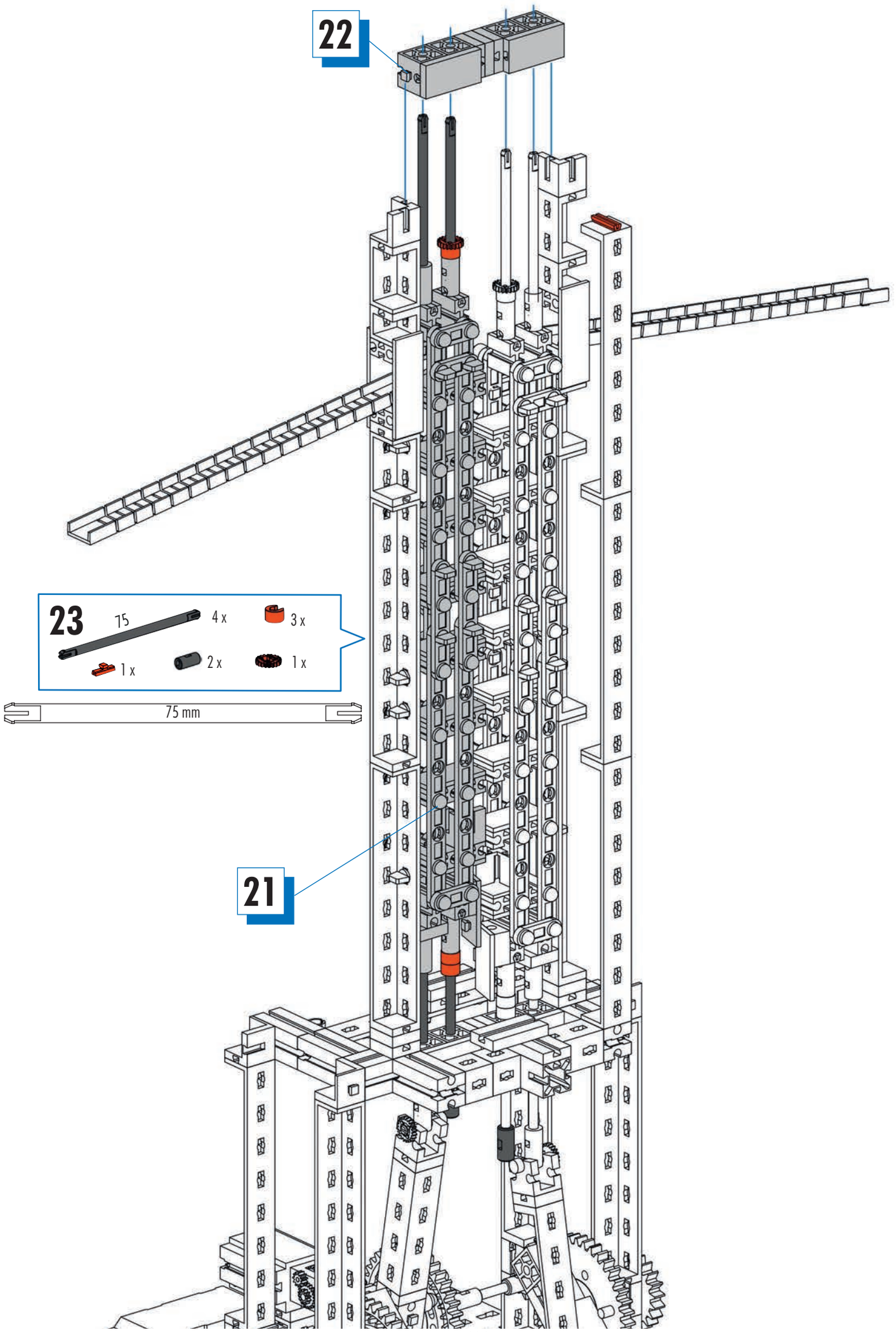

681

24

1 x

1 x

1 x

1 x

1 x

1 x

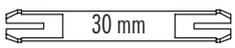

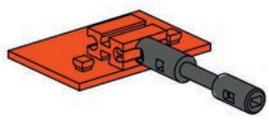

25

1 x

1 x

1 x

1 x

1 x

1 x

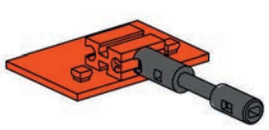

26

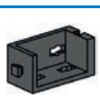

1 x

1 x

1 x

1 x

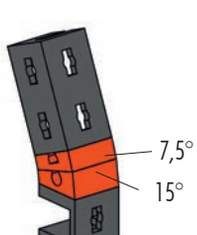

27

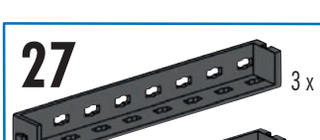

3 x

2 x

2 x

2 x

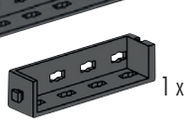

1 x

1 x

1 x

2 x

2 x

2 x

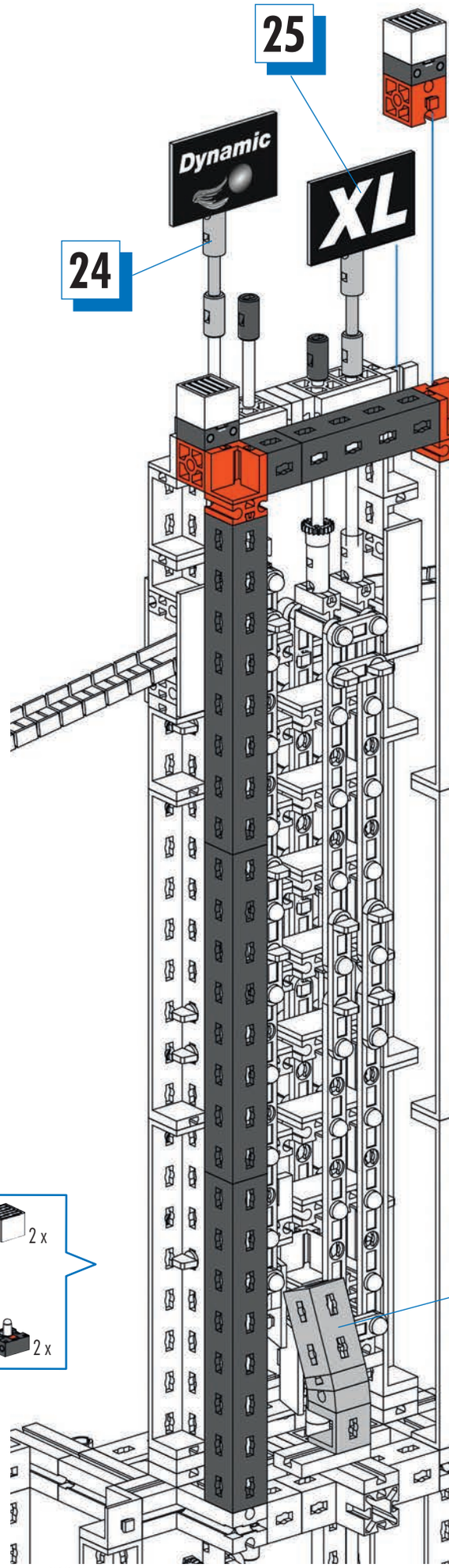

682

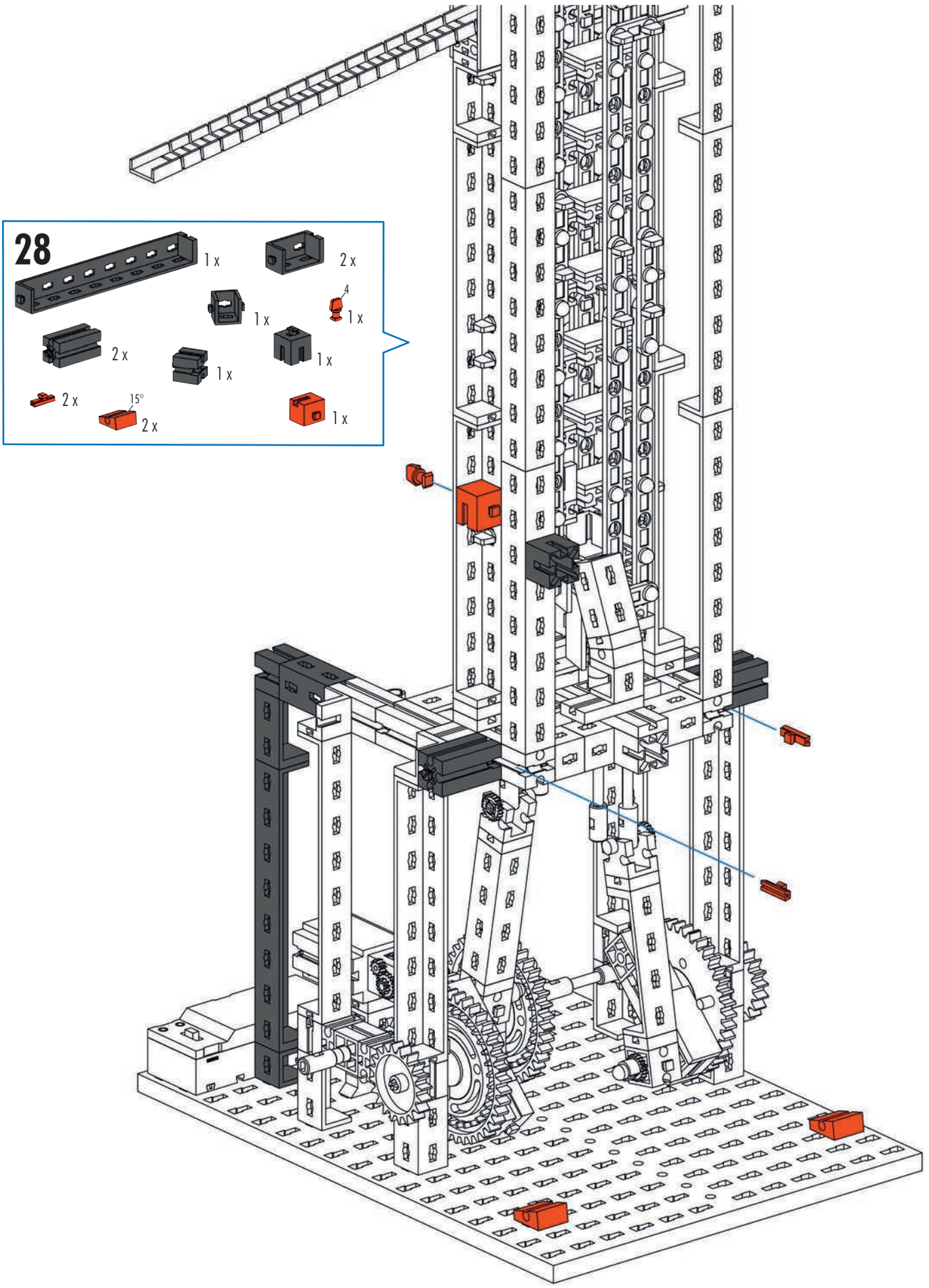

683

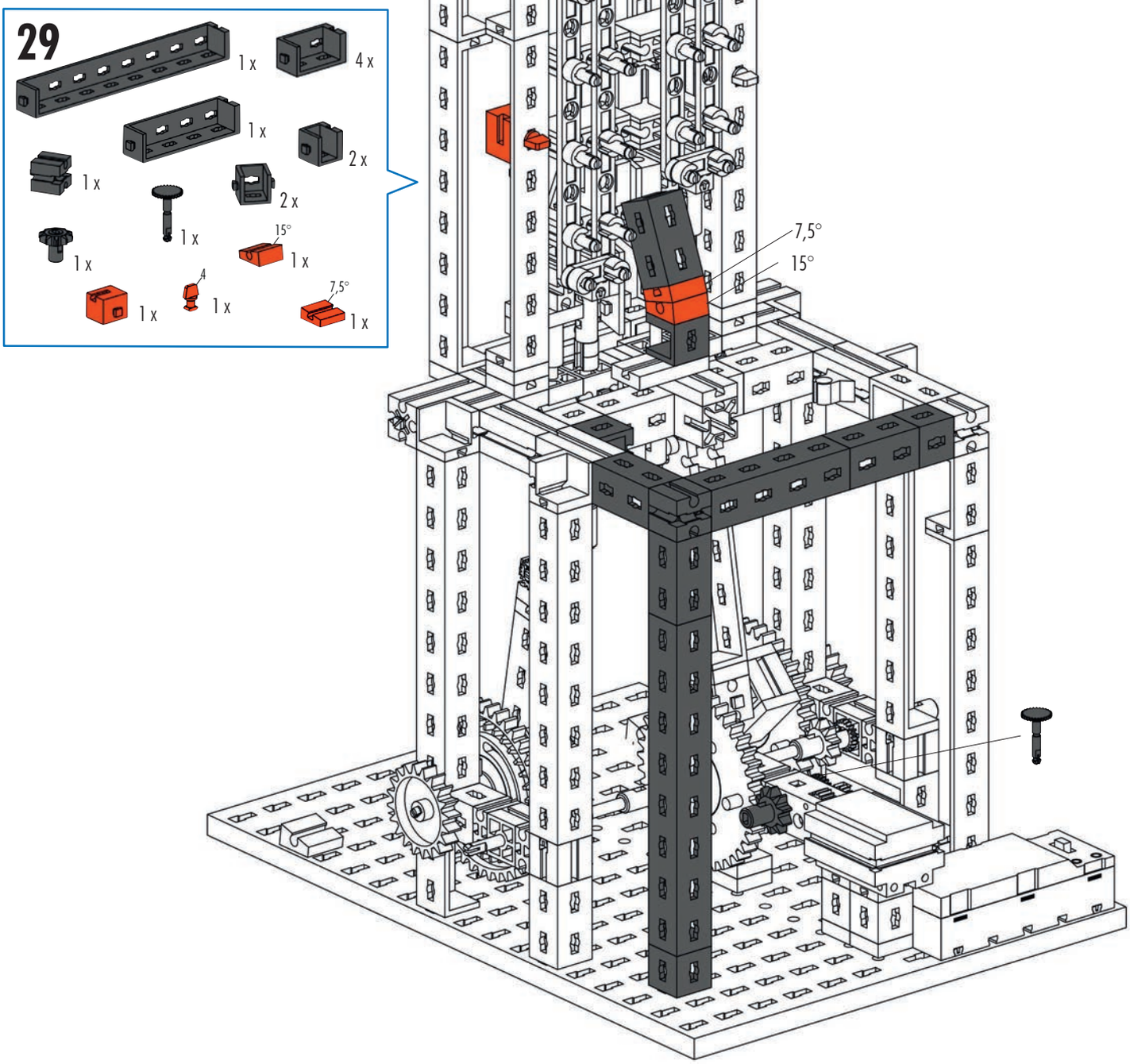
29
1 x
4 x
1 x
2 x
1 x
2 x
1 x
15°
1 x
4
1 x
1 x
7,5°
1 x
7,5°
15°

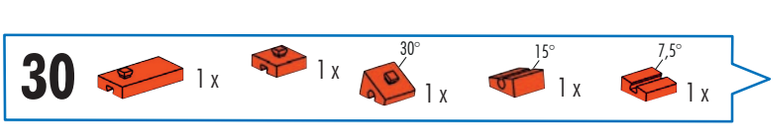
30
1 x
1 x
30°
1 x
15°
1 x
7,5°
1 x

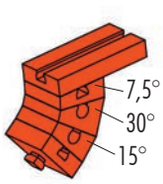
7,5°
30°
15°

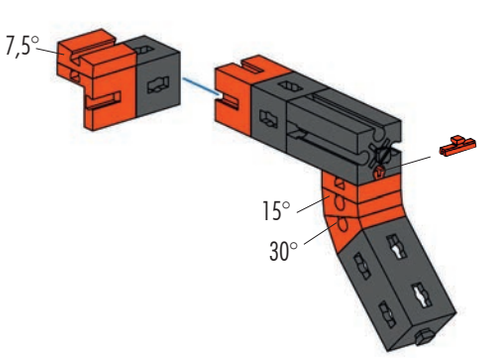
7,5°
15°
30°

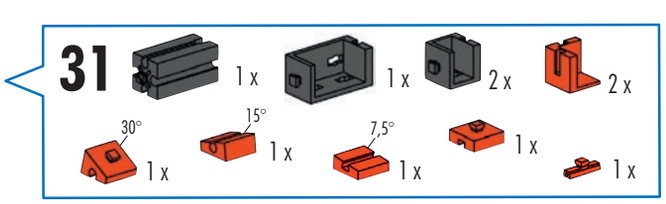
31
1 x
1 x
2 x
2 x
30°
1 x
15°
1 x
7,5°
1 x
1 x
1 x

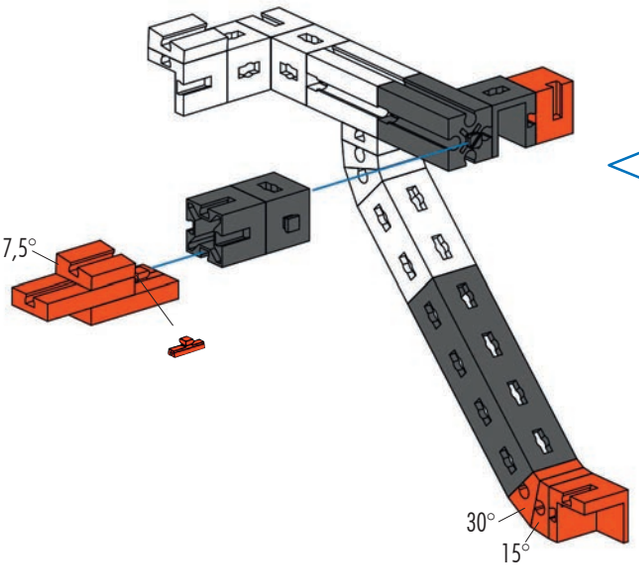
7,5°
30°
15°

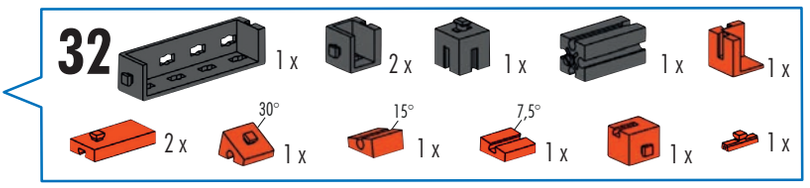
32
1 x
2 x
1 x
1 x
1 x
2 x
30°
1 x
15°
1 x
7,5°
1 x
1 x
1 x

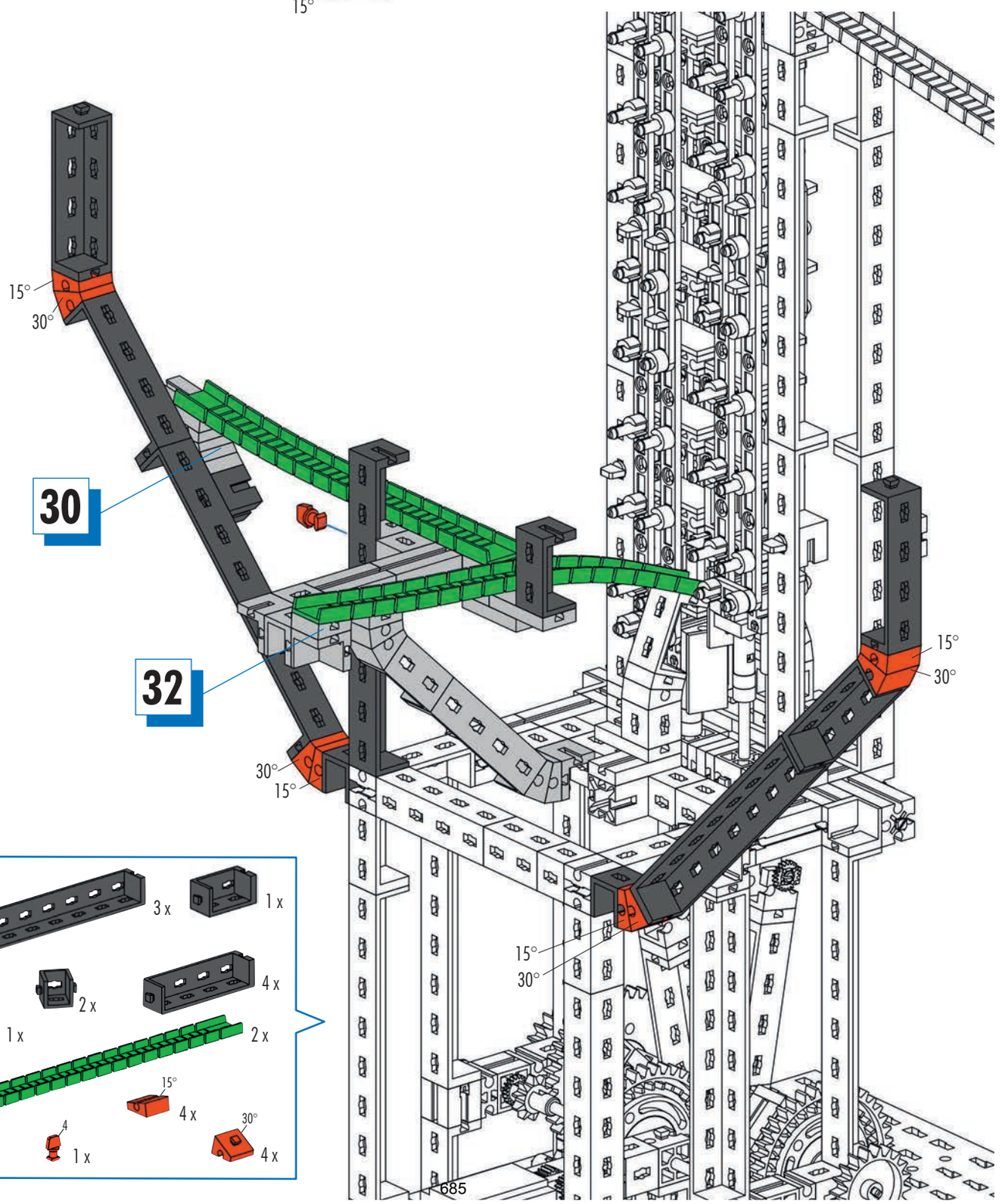
15°
30°
30
32
30°
15°
15°
30°
15°
30°
685

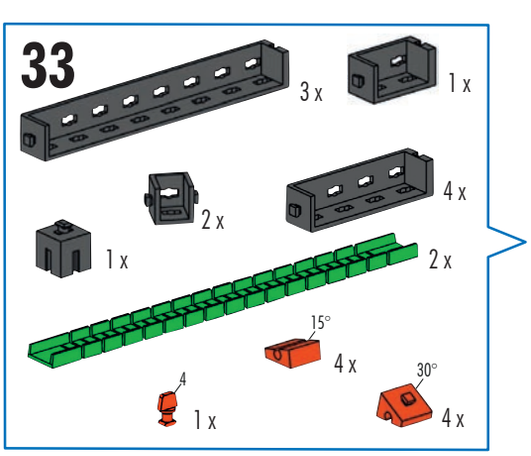
33
3 x
1 x
4 x
2 x
1 x
2 x
15°
4 x
4
1 x
30°
4 x

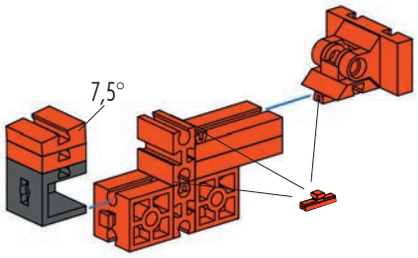
7,5°

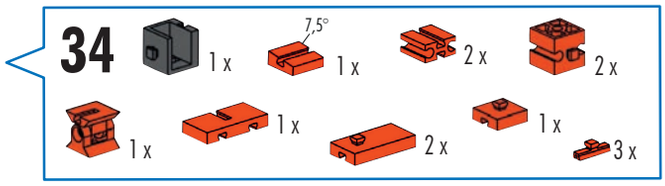
34
1 x
7,5°
1 x
2 x
2 x
1 x
1 x
2 x
1 x
3 x

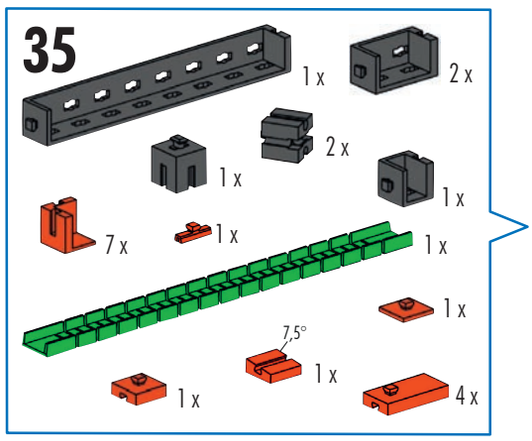
35
1 x
2 x
2 x
1 x
1 x
7 x
1 x
1 x
1 x
7,5°
1 x
1 x
4 x

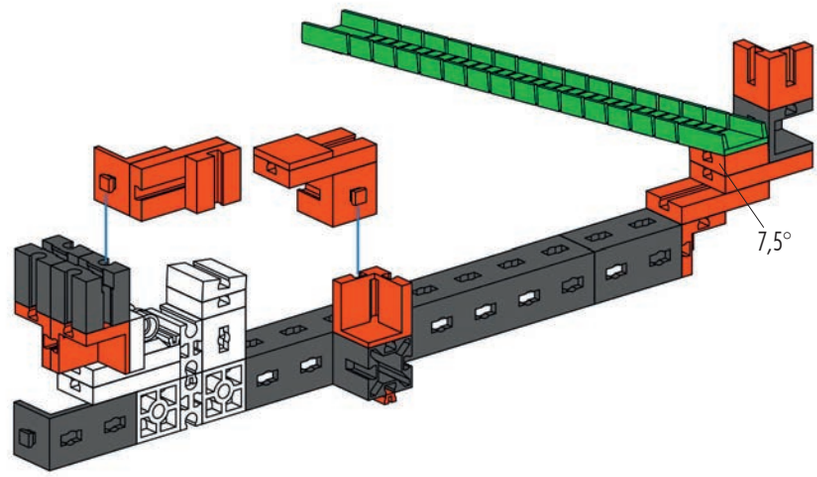
7,5°

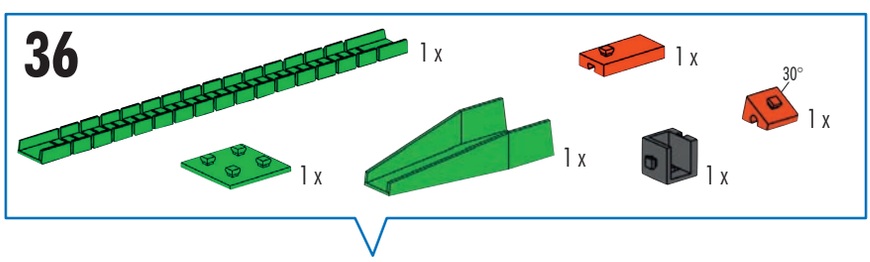
36
1 x
1 x
30°
1 x
1 x
1 x
1 x

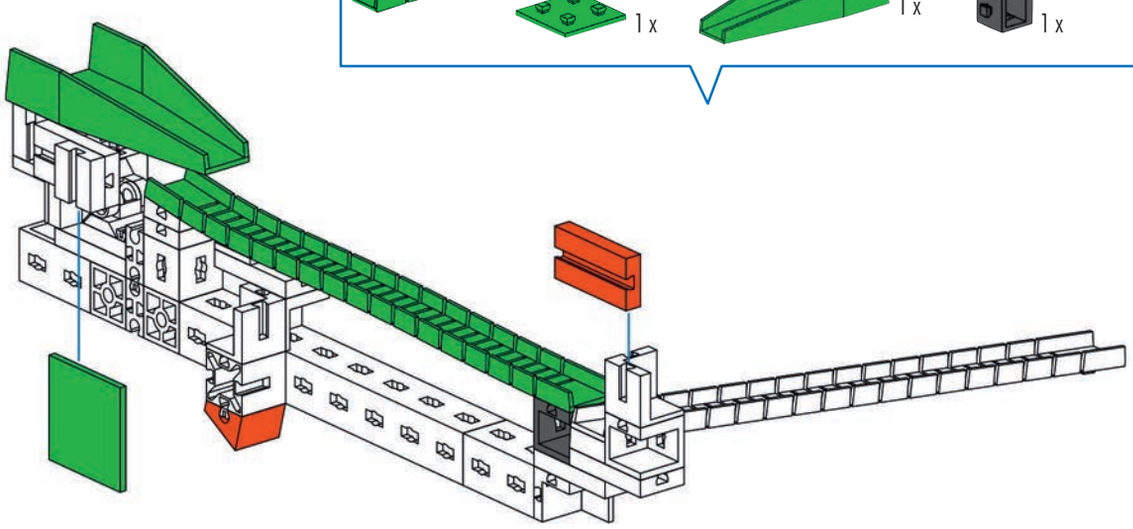

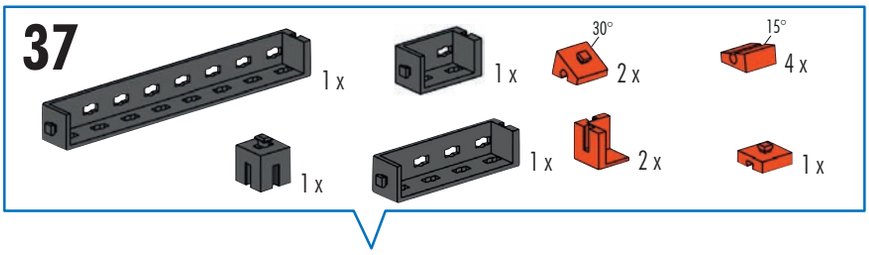
37
1 x
1 x
30°
2 x
15°
4 x
1 x
1 x
2 x
1 x

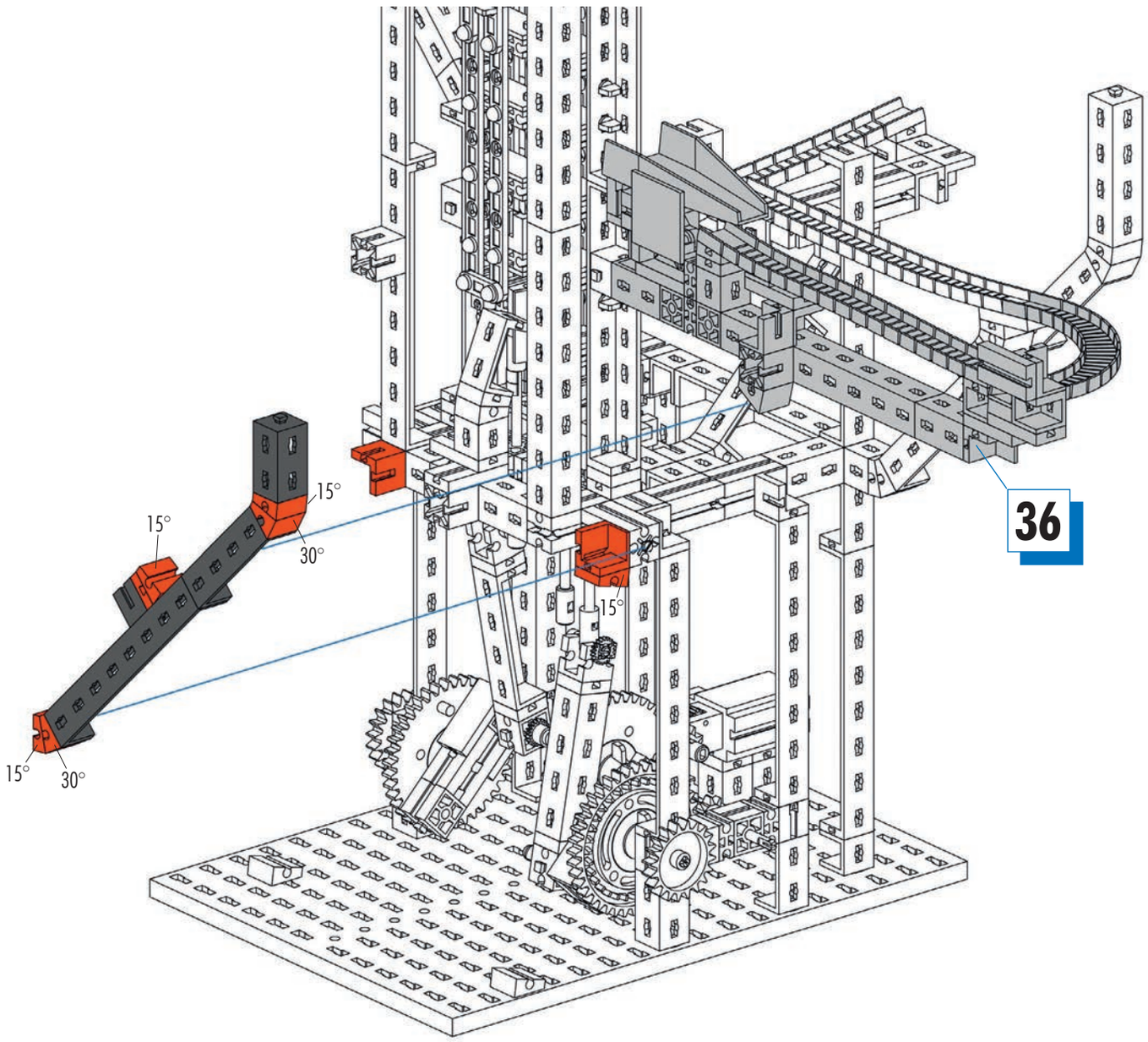
15°
15°
30°
15°
15°
30°
36

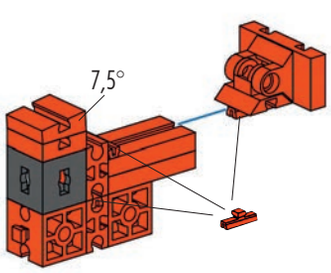
7,5°

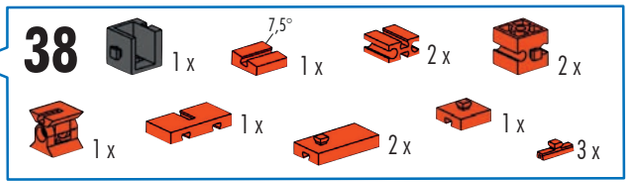
38
1 x
7,5°
1 x
2 x
2 x
1 x
1 x
2 x
1 x
3 x

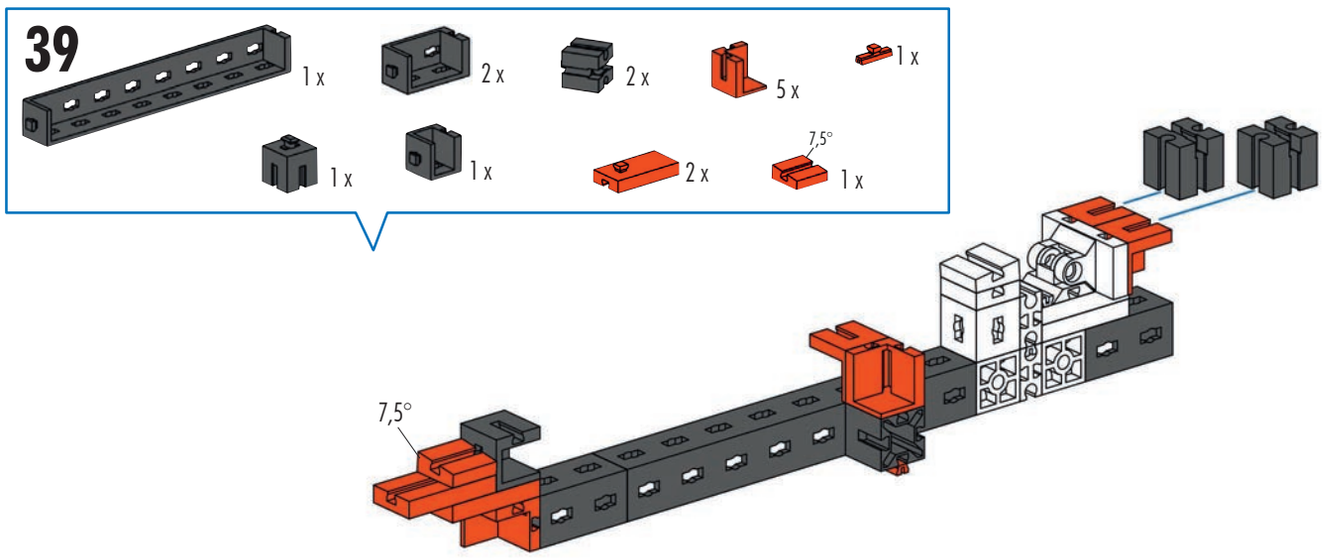
39
1 x
2 x
2 x
5 x
1 x
1 x
1 x
2 x
7,5°
1 x
7,5°

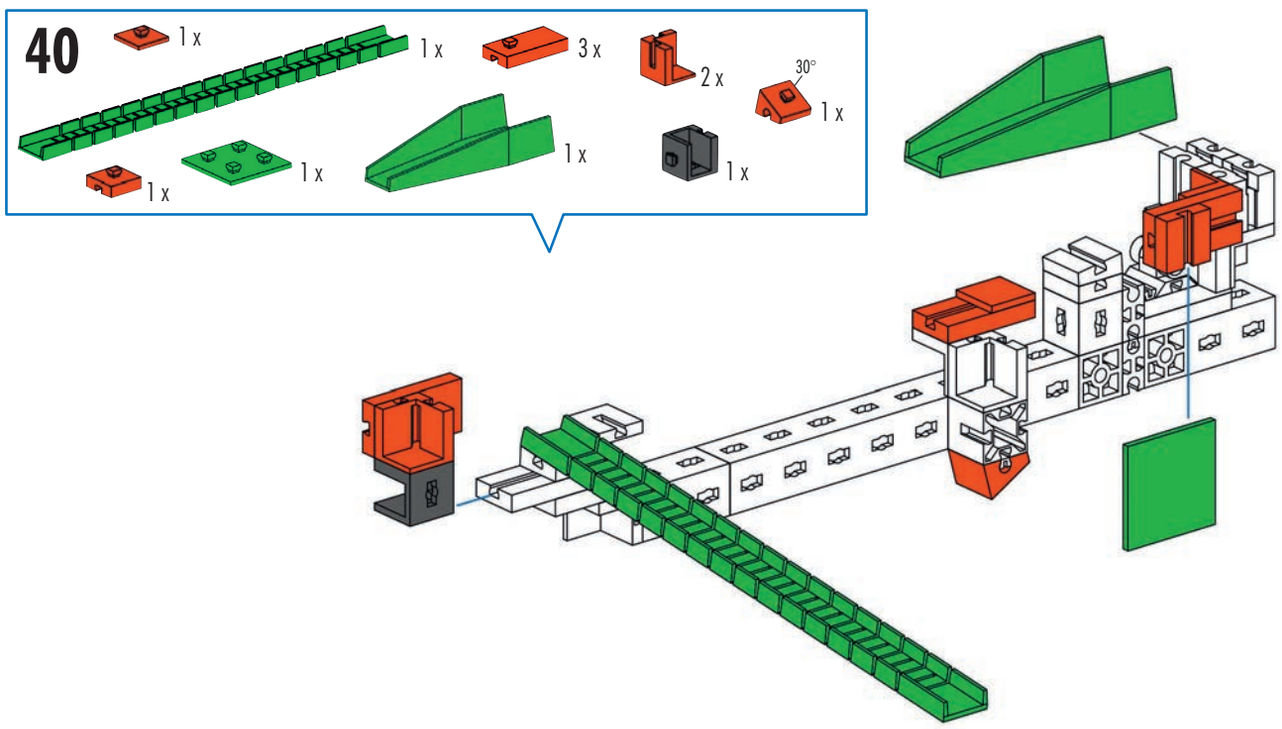
40
1 x
1 x
3 x
2 x
30°
1 x
1 x
1 x
1 x

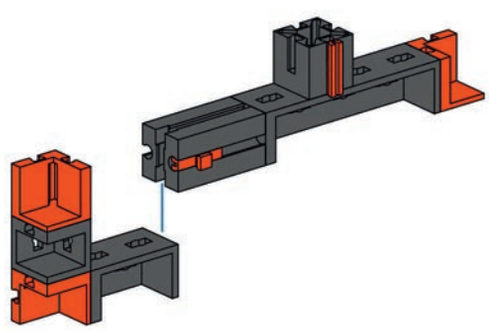

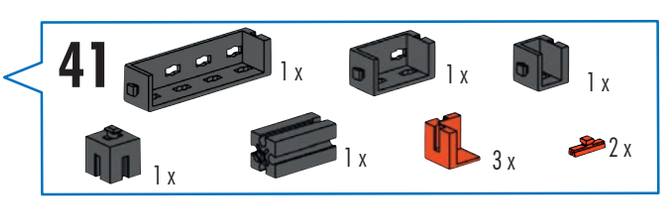
41
1 x
1 x
1 x
1 x
1 x
3 x
2 x

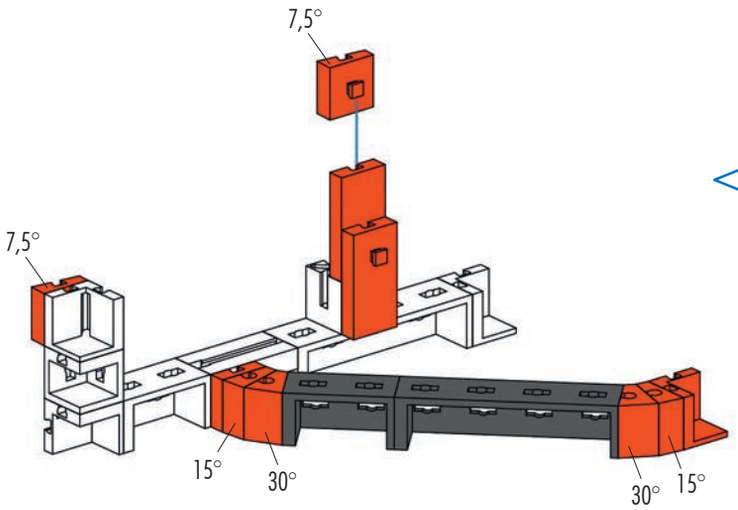
7,5°
7,5°
15°
30°
30°
15°

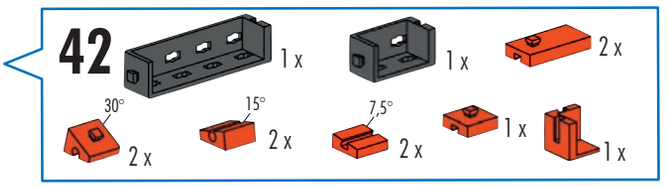
42
1 x
1 x
2 x
30°
2 x
15°
2 x
7,5°
2 x
1 x
1 x

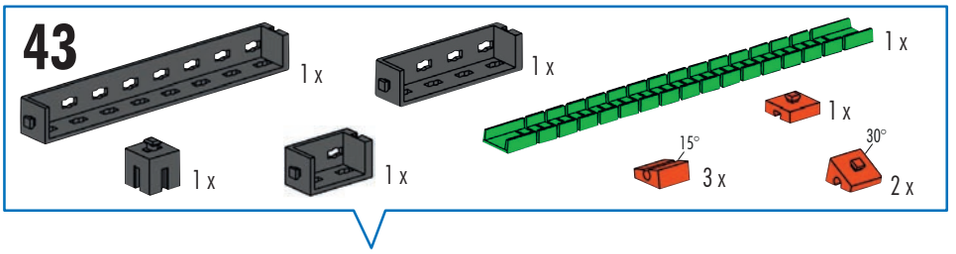
43
1 x
1 x
1 x
1 x
1 x
15°
3 x
30°
2 x

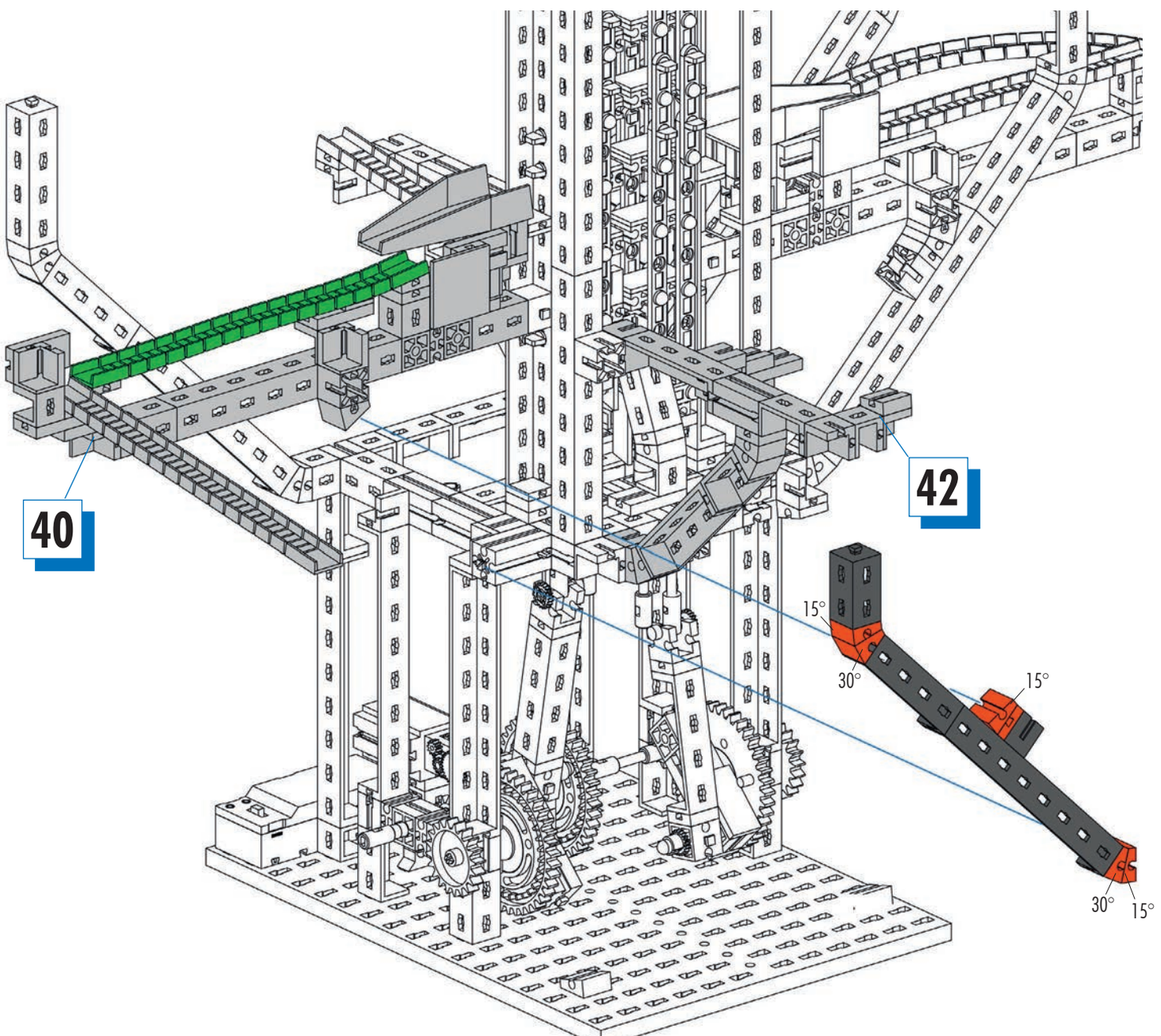
40
42
15°
30°
15°
30°
15°

689

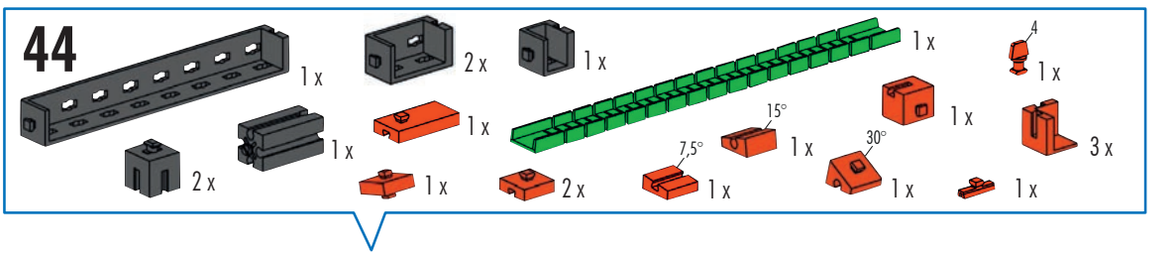
44
1 x
2 x
1 x
1 x
2 x
1 x
1 x
2 x
1 x
15°
1 x
7,5°
30°
1 x
1 x
4
1 x
1 x
3 x

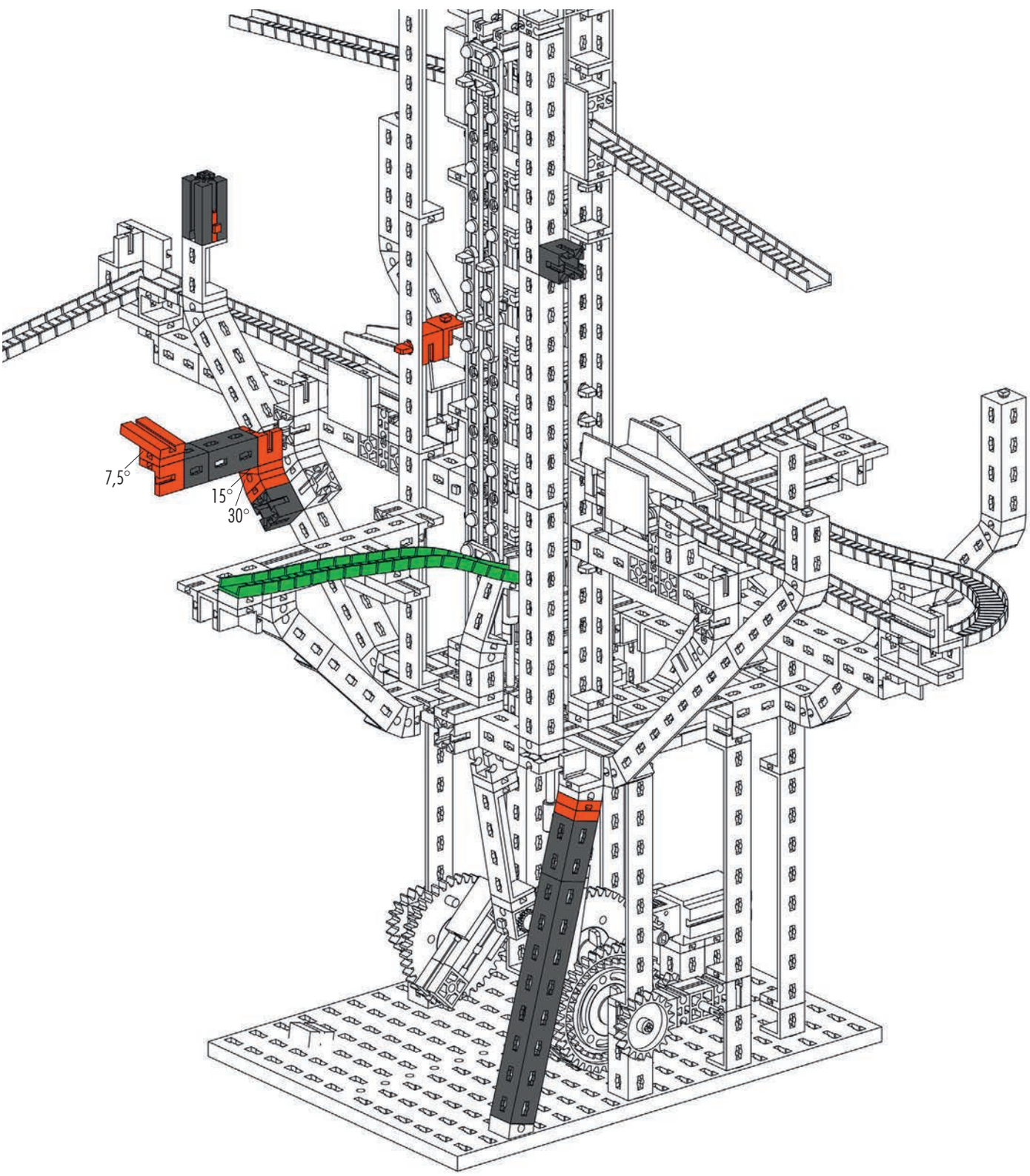
7,5°
15°
30°

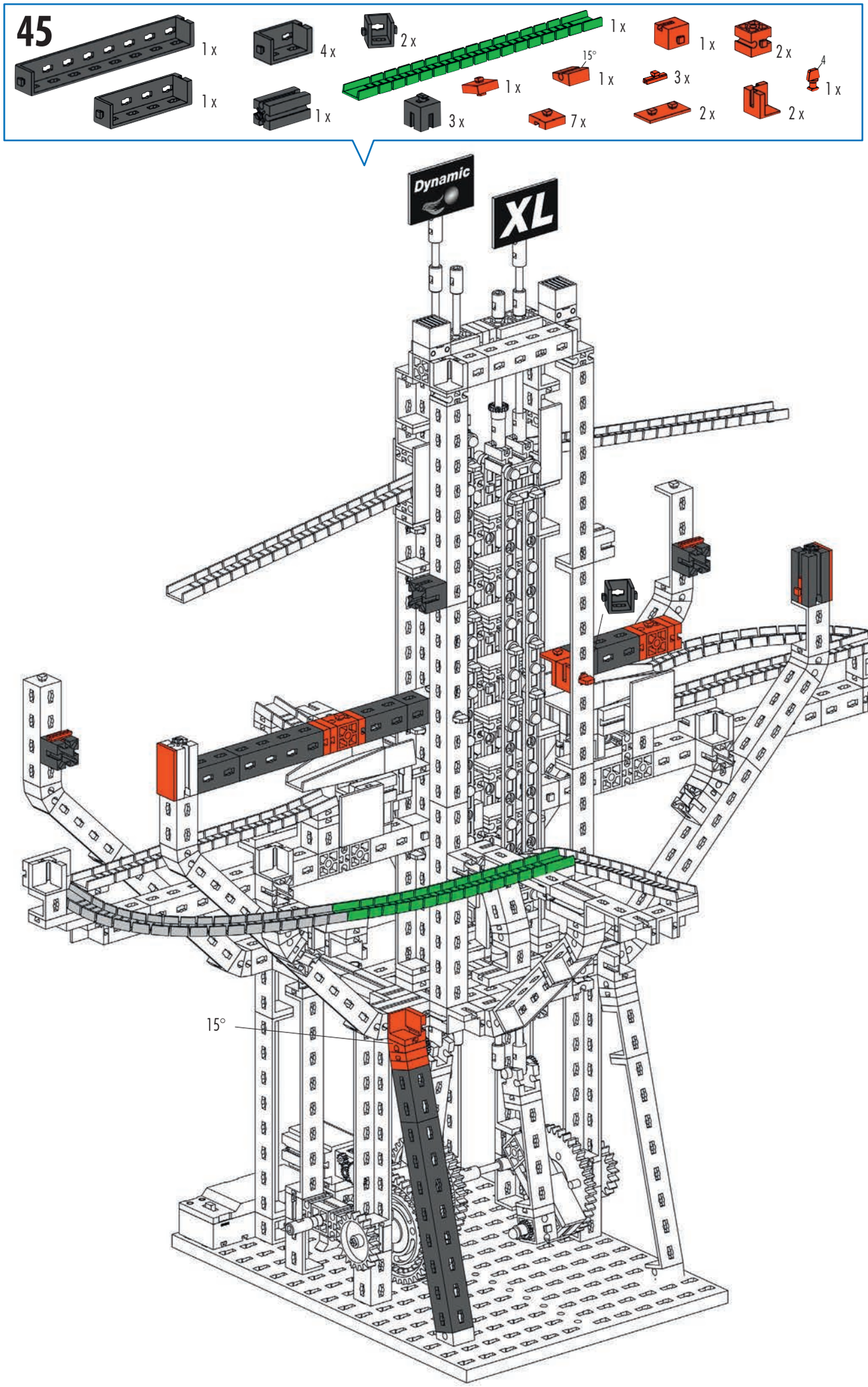

691

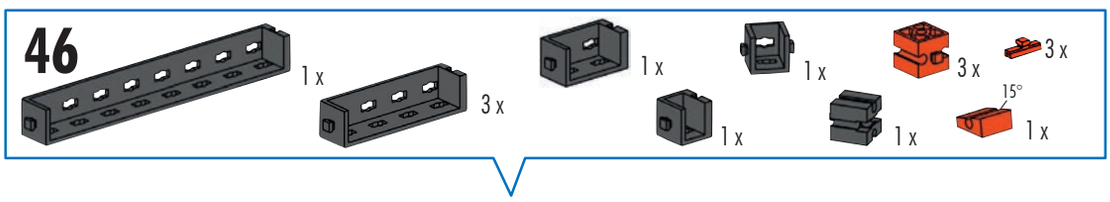
46
1 x
3 x
1 x
1 x
3 x
3 x
1 x
1 x
15°
1 x

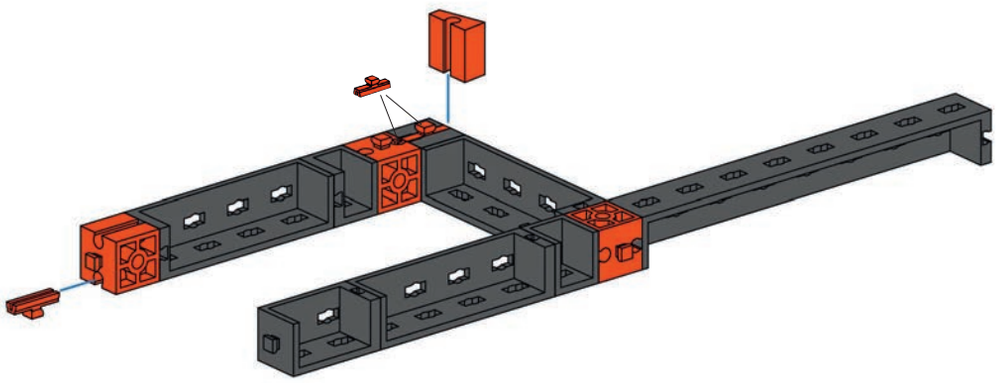

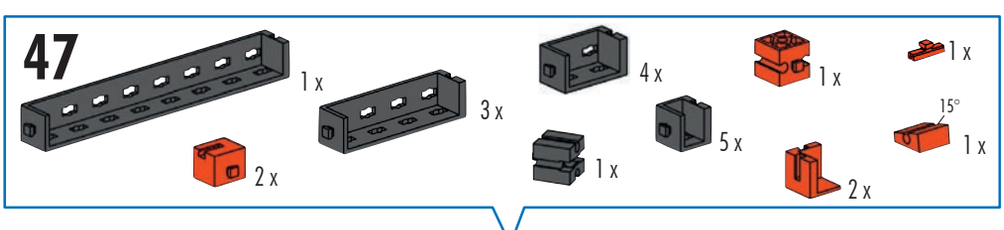
47
1 x
3 x
4 x
1 x
1 x
2 x
1 x
5 x
15°
1 x
2 x

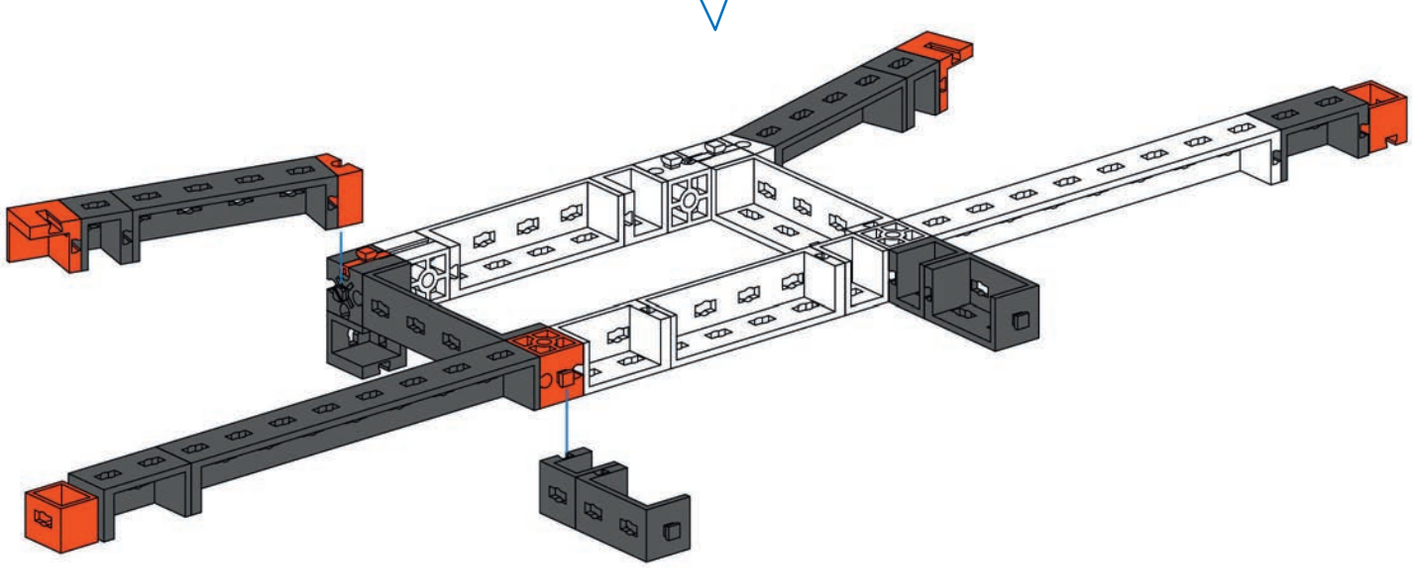

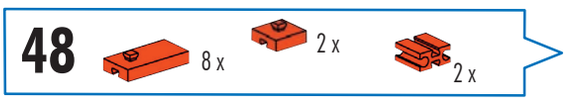
48
8 x
2 x
2 x

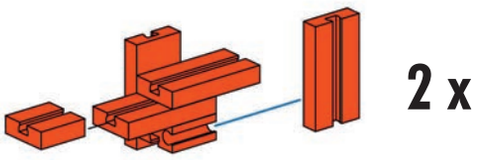
2 x

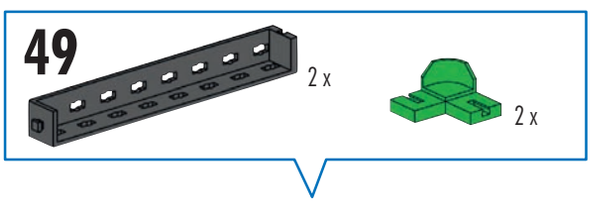
49
2 x
2 x

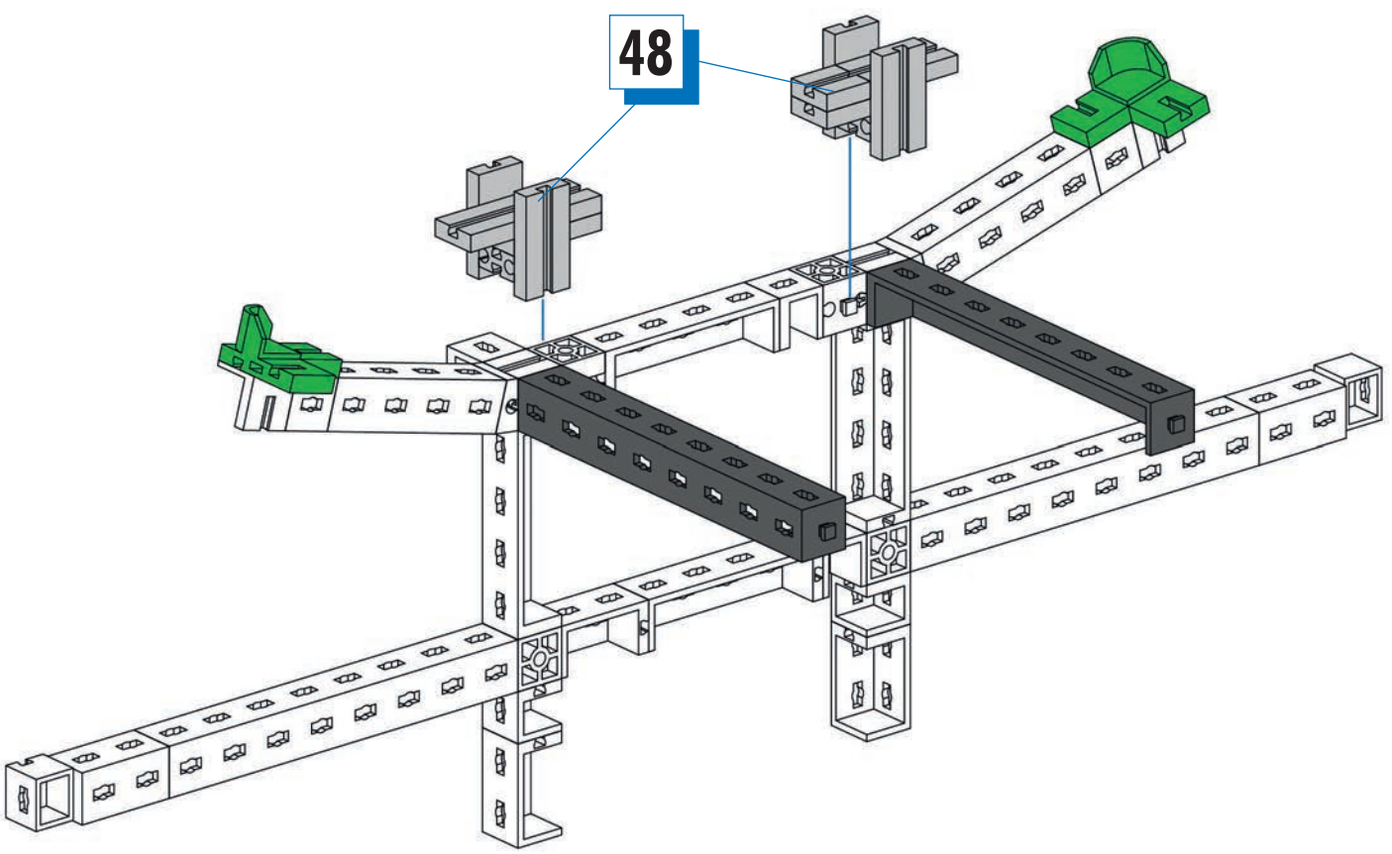
48

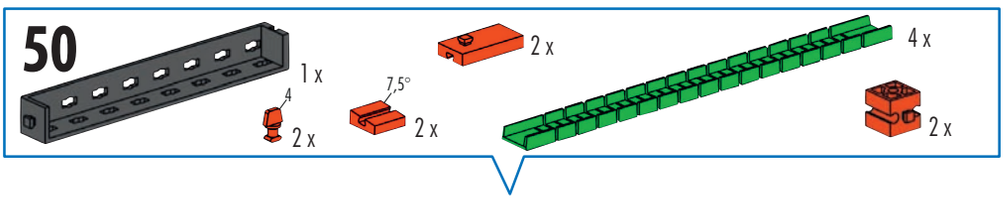
50
1 x
4
2 x
7,5°
2 x
2 x
4 x
2 x

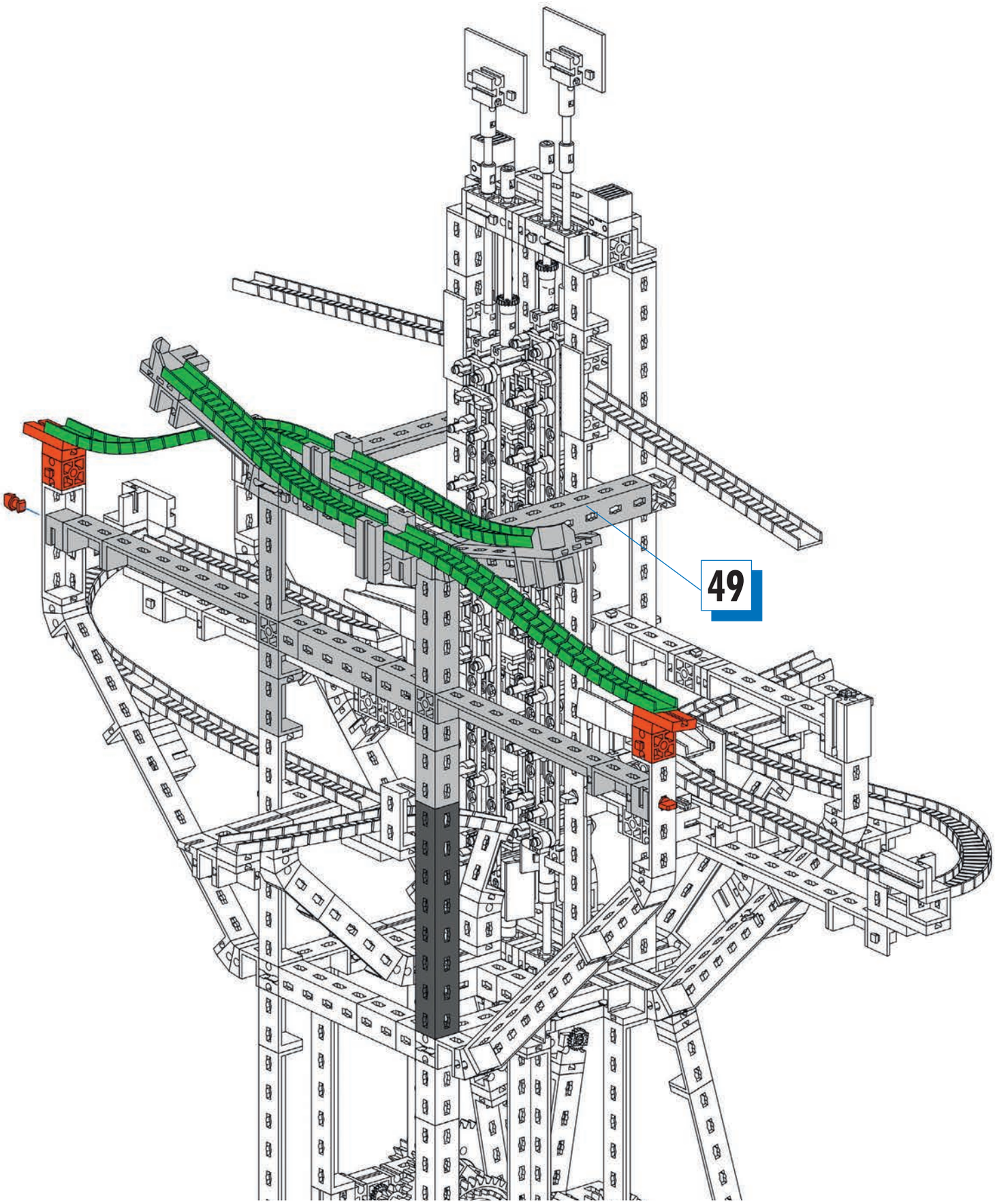
49

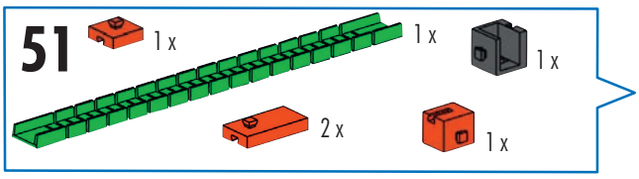
51
1 x
1 x
1 x
2 x
1 x

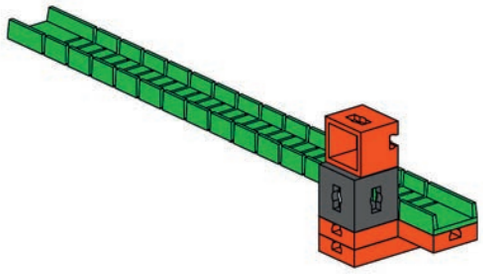

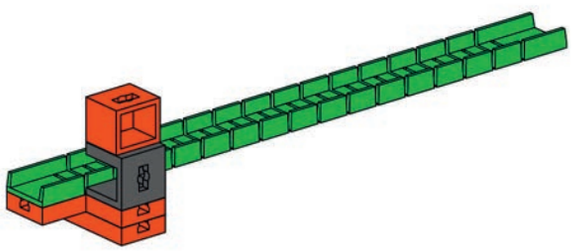

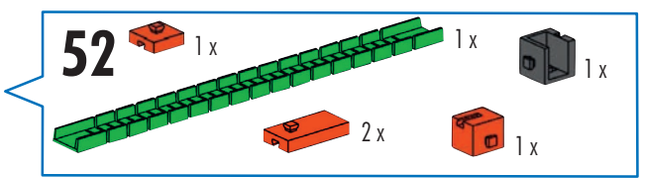
52
1 x
1 x
1 x
2 x
1 x

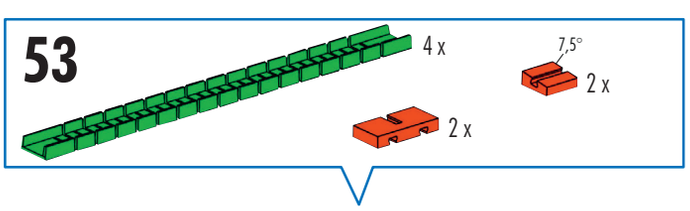
53
4 x
7.5°
2 x
2 x

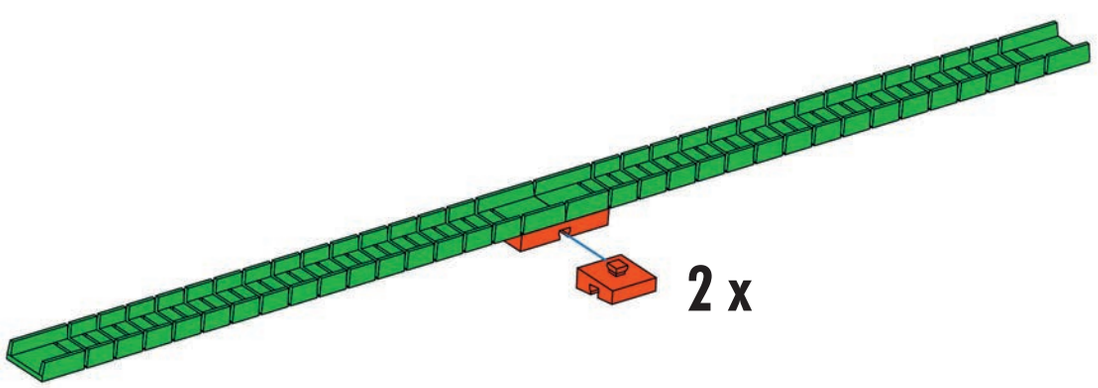
2 x

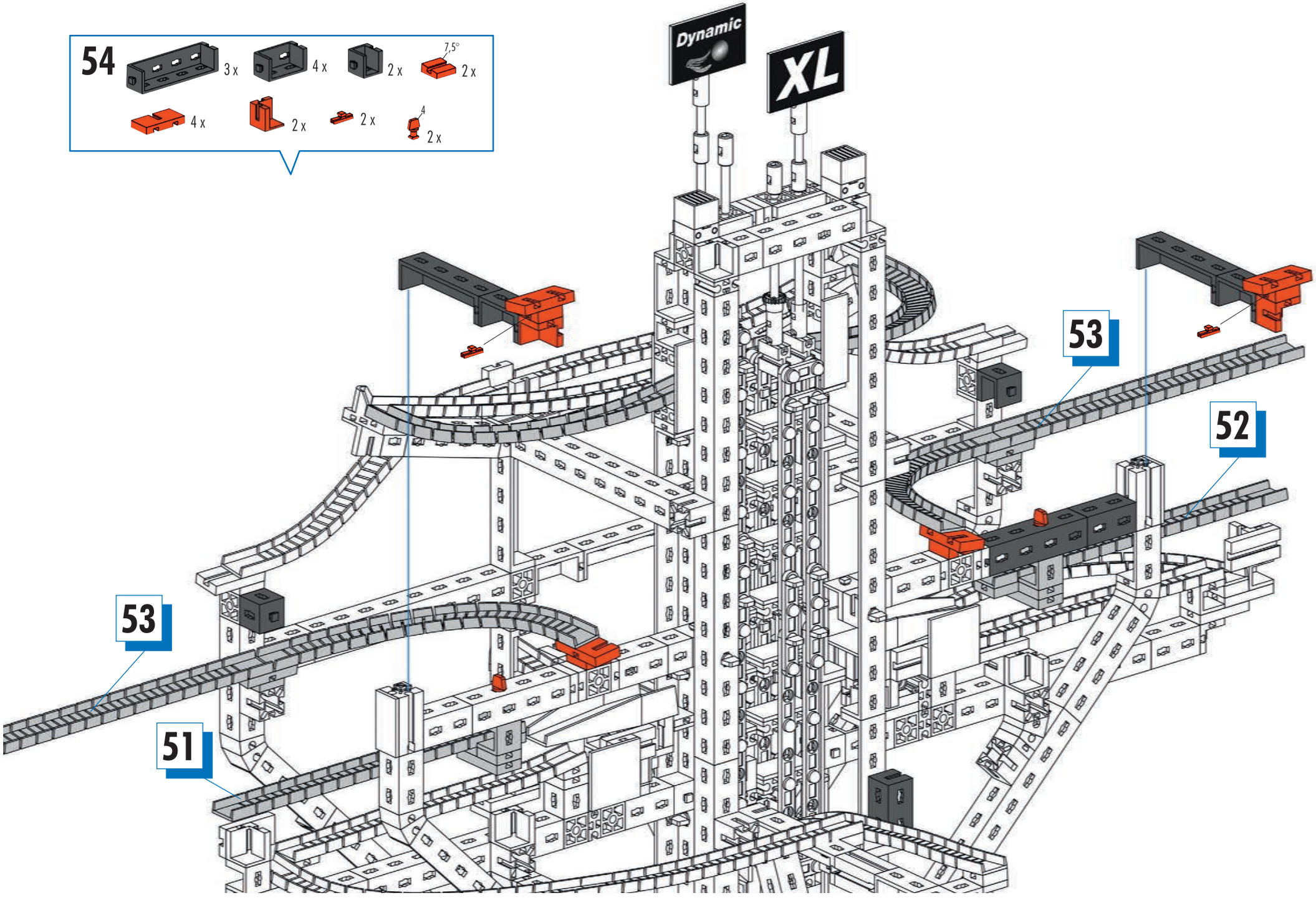
54
3 x
4 x
2 x
7,5°
2 x
4 x
2 x
2 x
4
2 x
Dynamic
XL
53
52
53
51

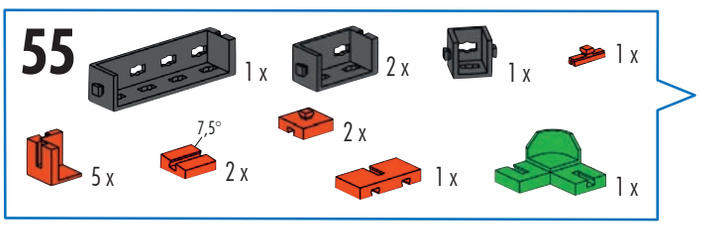
55
1 x
2 x
1 x
1 x
5 x
7,5°
2 x
2 x
1 x
1 x

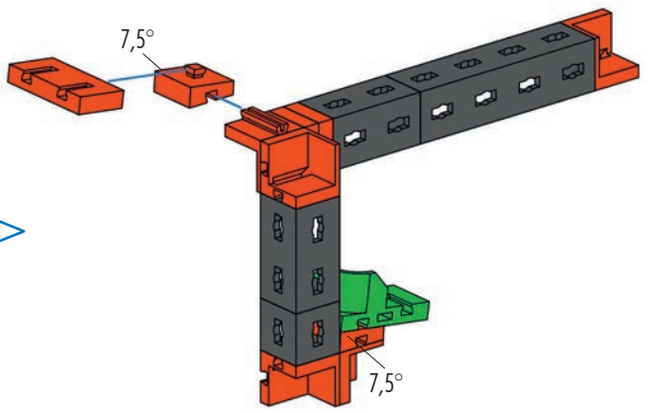
7,5°
7,5°

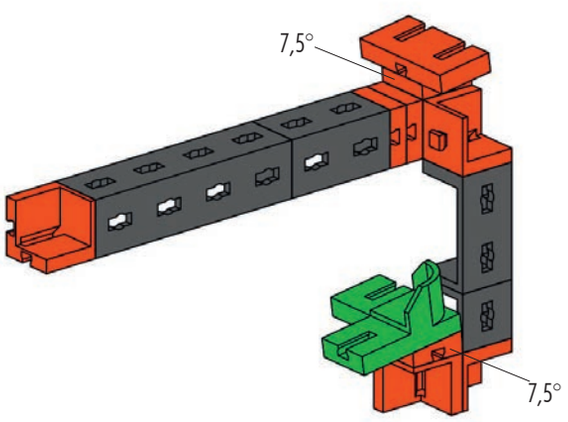
7,5°
7,5°

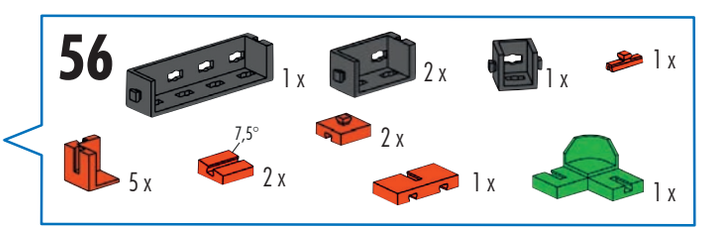
56
1 x
2 x
1 x
1 x
5 x
7,5°
2 x
2 x
1 x
1 x

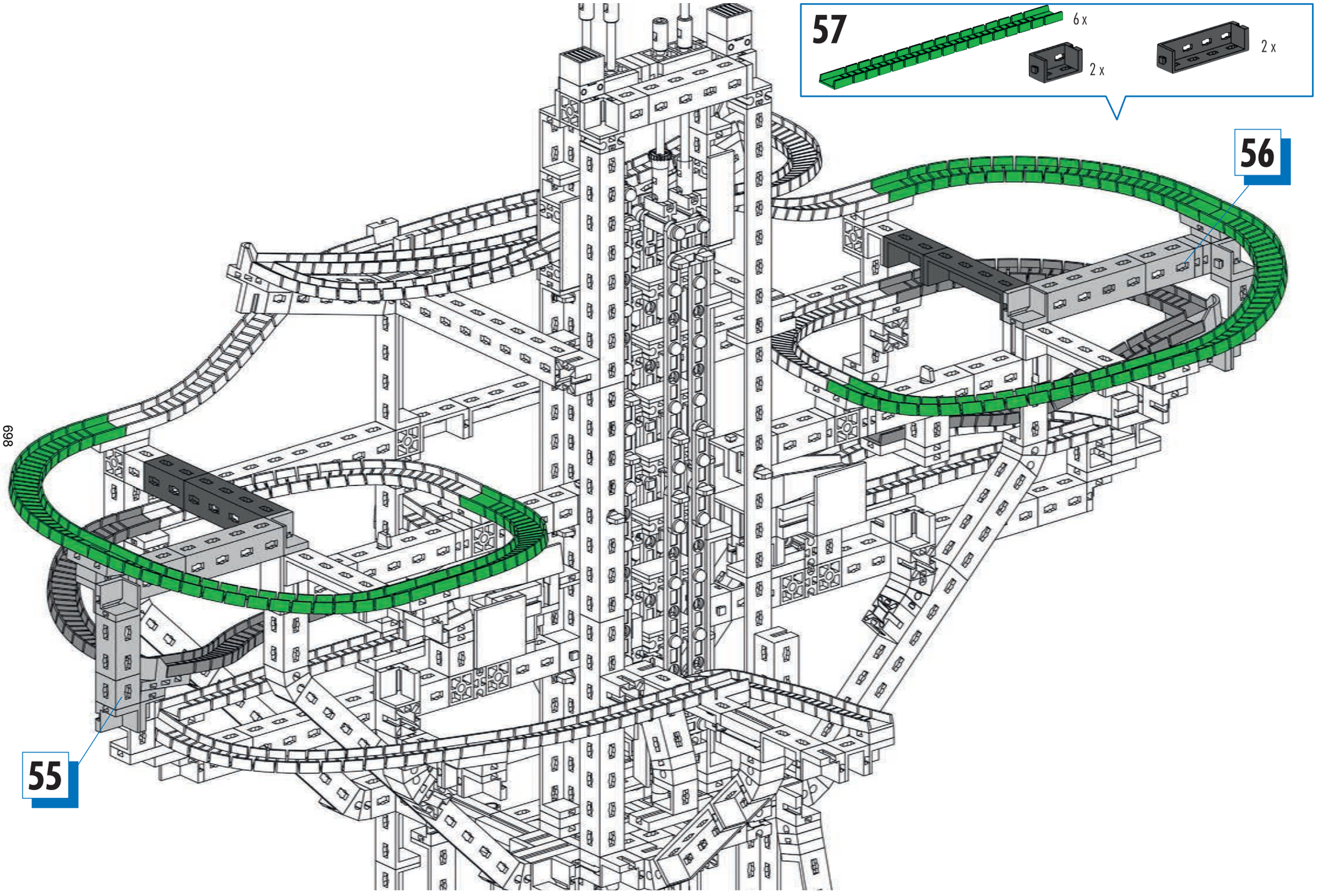
57
6 x
2 x
2 x
56
55

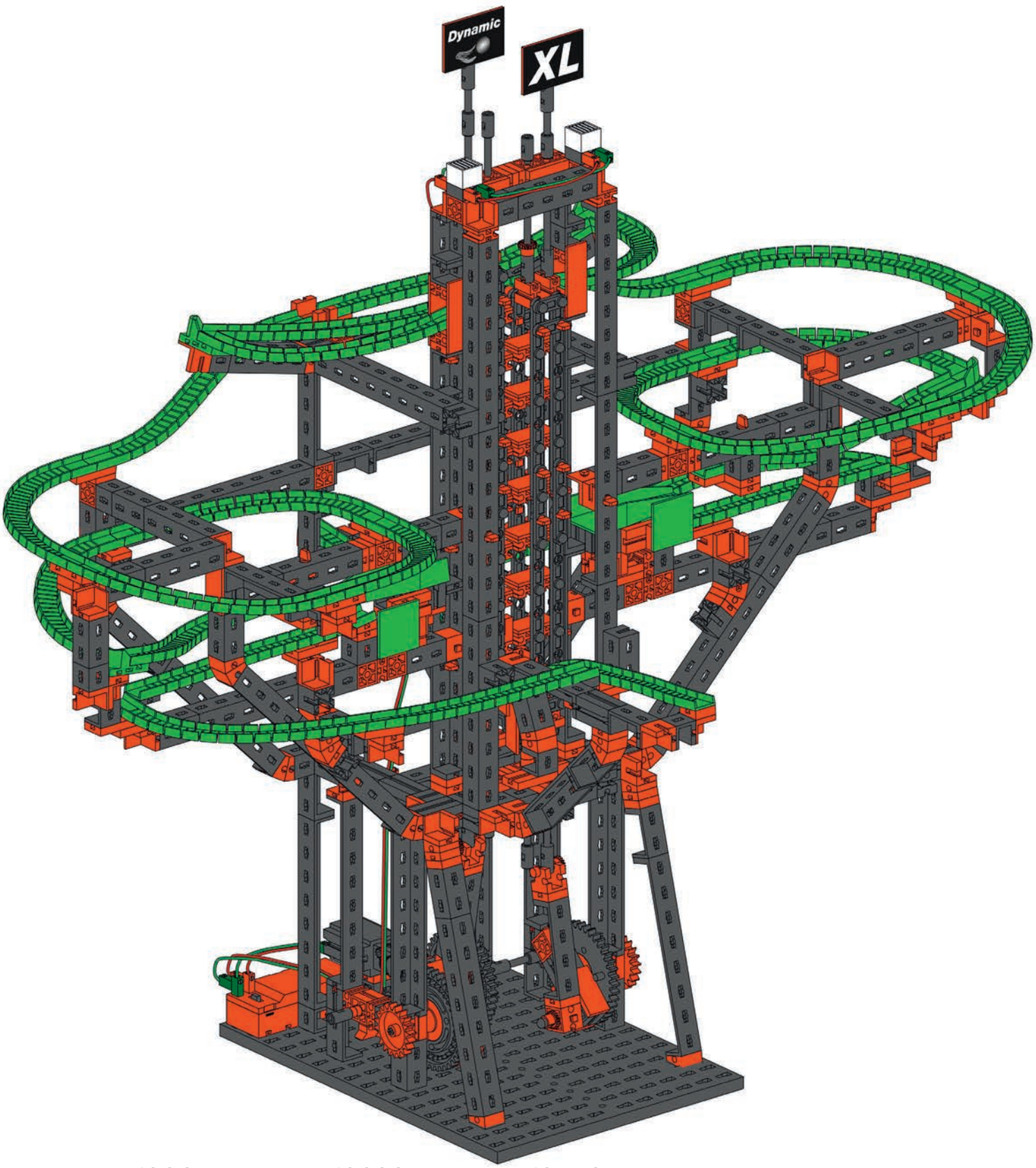

Schaltplan
Circuit diagram
Plan électrique

Schakelschema
Diagrama de circuitos
Plano elétrico de ligação

Schema elettrico
Схема подключения
电路图

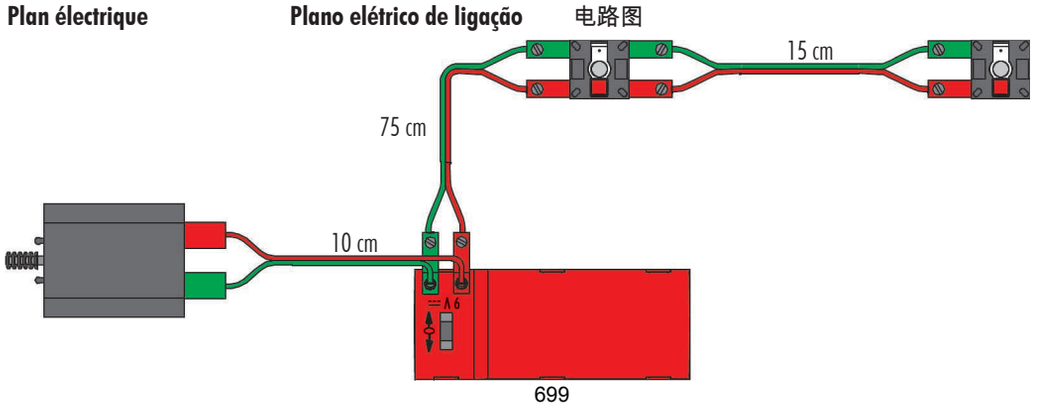

Schießförderer
Spring launcher
Lance-bille

Schietmechanisme
Transportador de disparo
Transportadora de arremesso

Convogliatore a tiro
Выстреливающий транспортёр
弹射式输送机

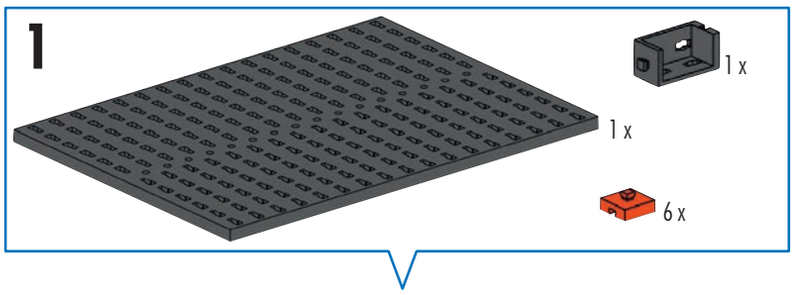

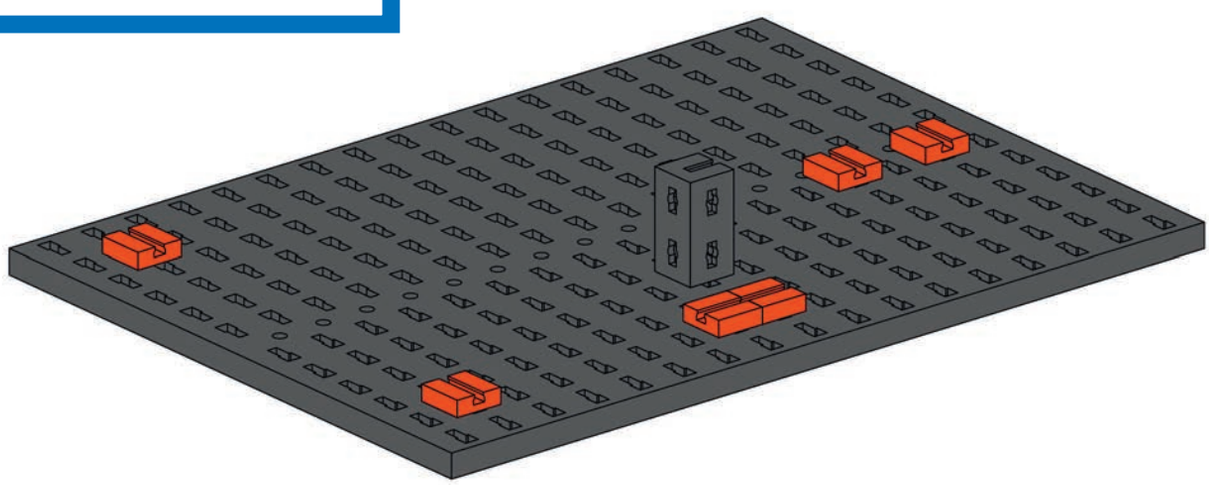

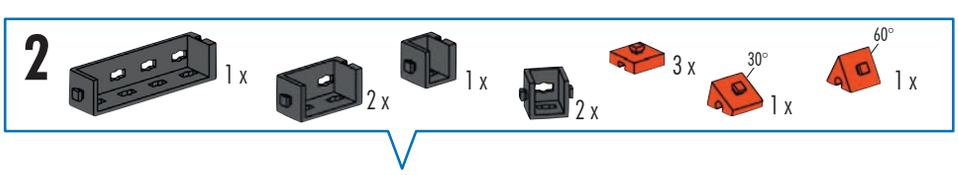

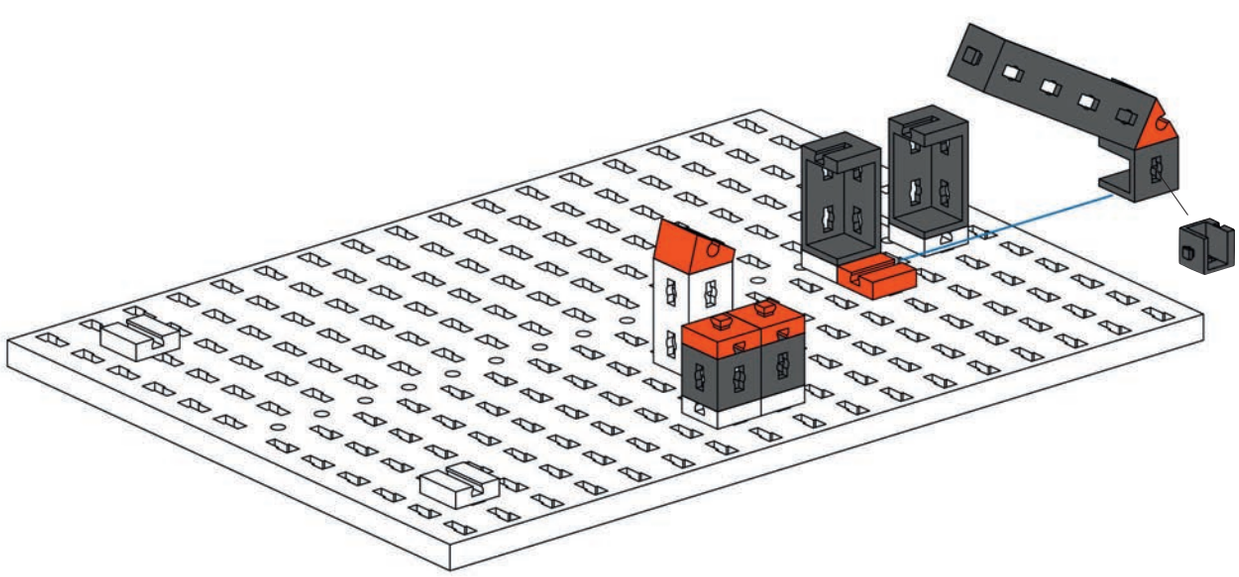

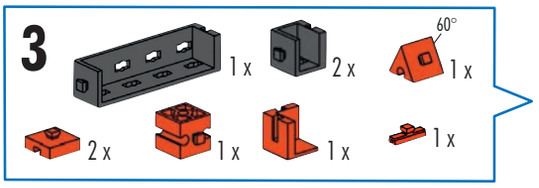
3
1 x
2 x
60°
1 x
2 x
1 x
1 x
1 x

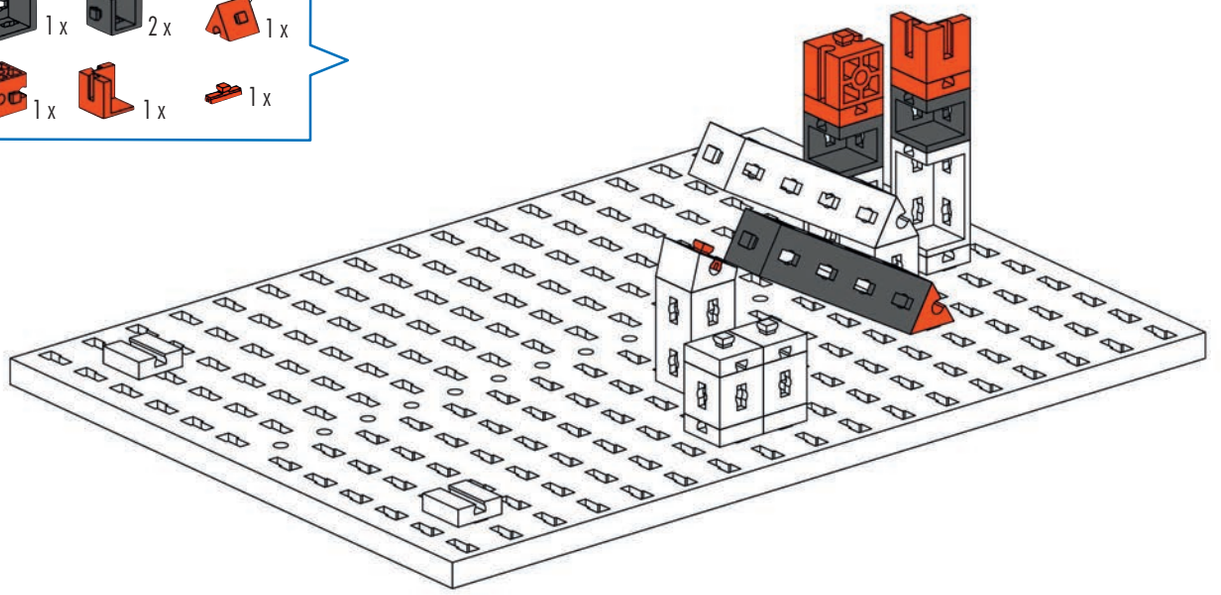

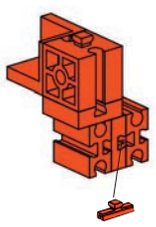

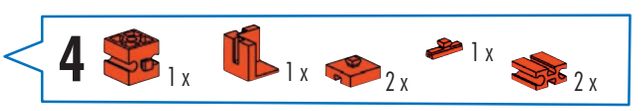
4
1 x
1 x
2 x
1 x
2 x

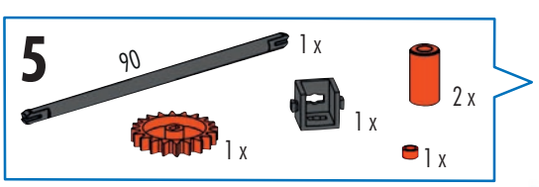
5
90
1 x
1 x
2 x
1 x
1 x

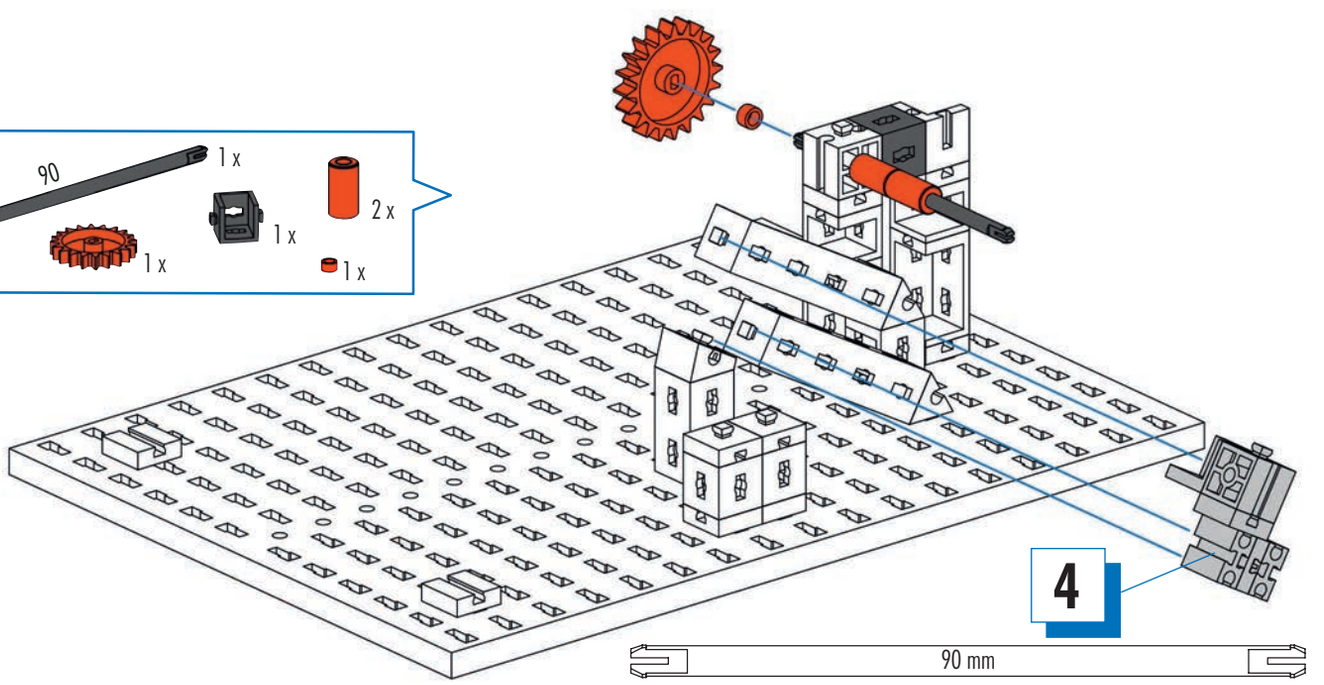
4
90 mm

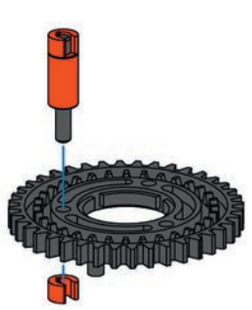

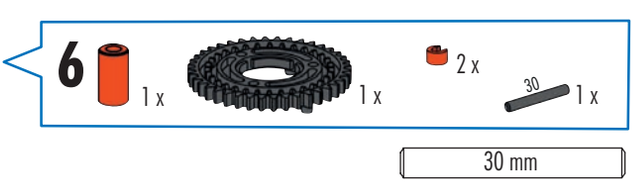
6
1 x
1 x
2 x
30
1 x
30 mm

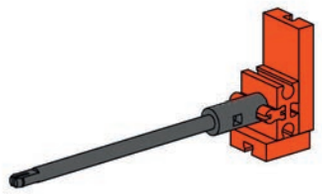

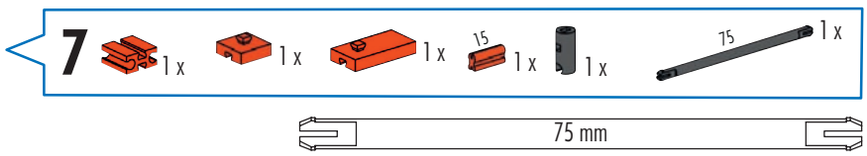
7
1 x
1 x
1 x
15
1 x
1 x
75
1 x
75 mm

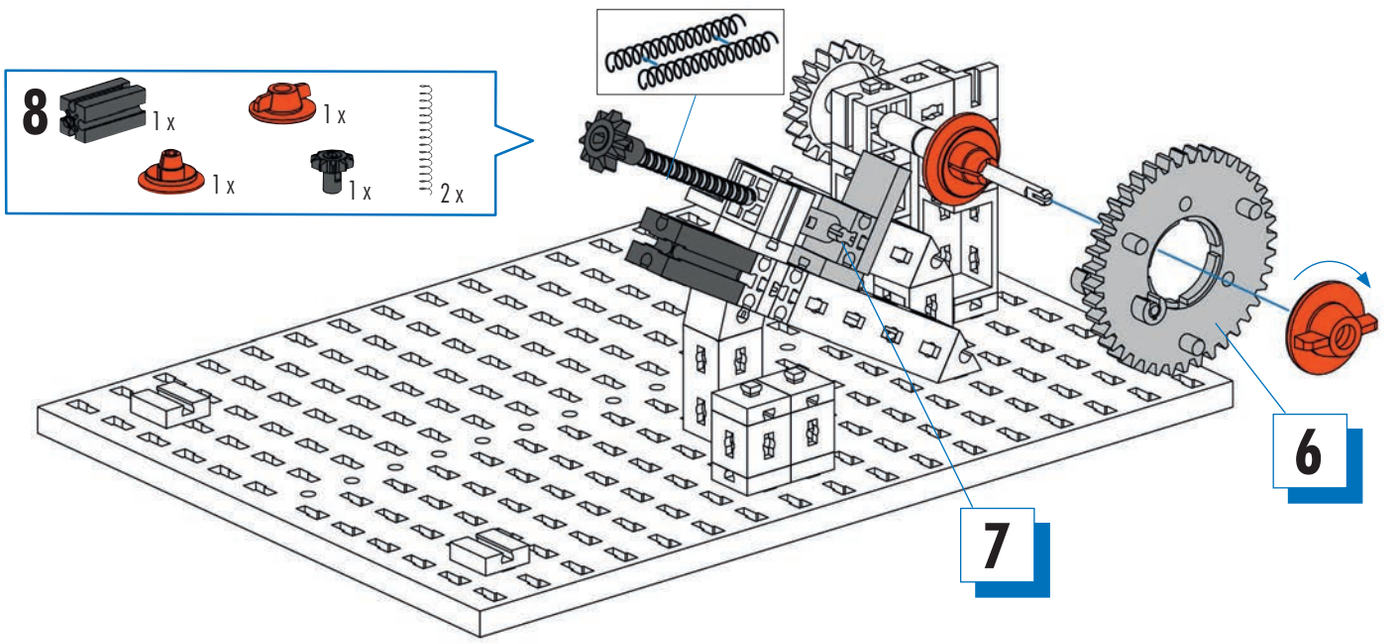
8
1 x
1 x
1 x
1 x
2 x
6
7

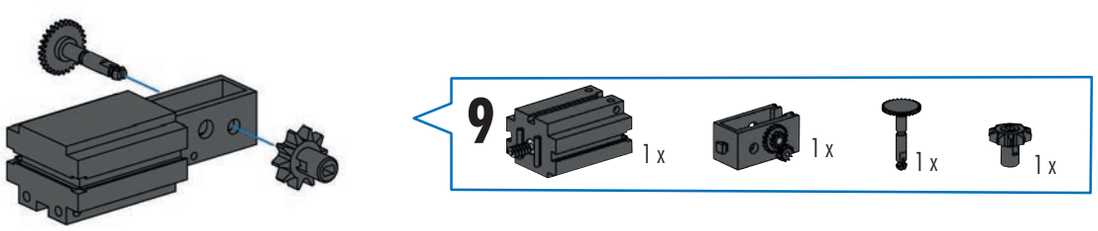
9
1 x
1 x
1 x
1 x

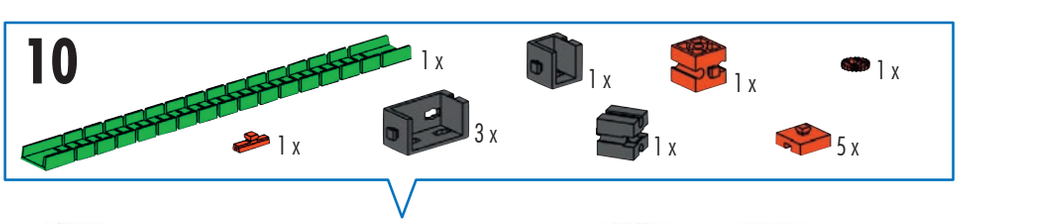
10
1 x
1 x
1 x
1 x
1 x
3 x
1 x
5 x

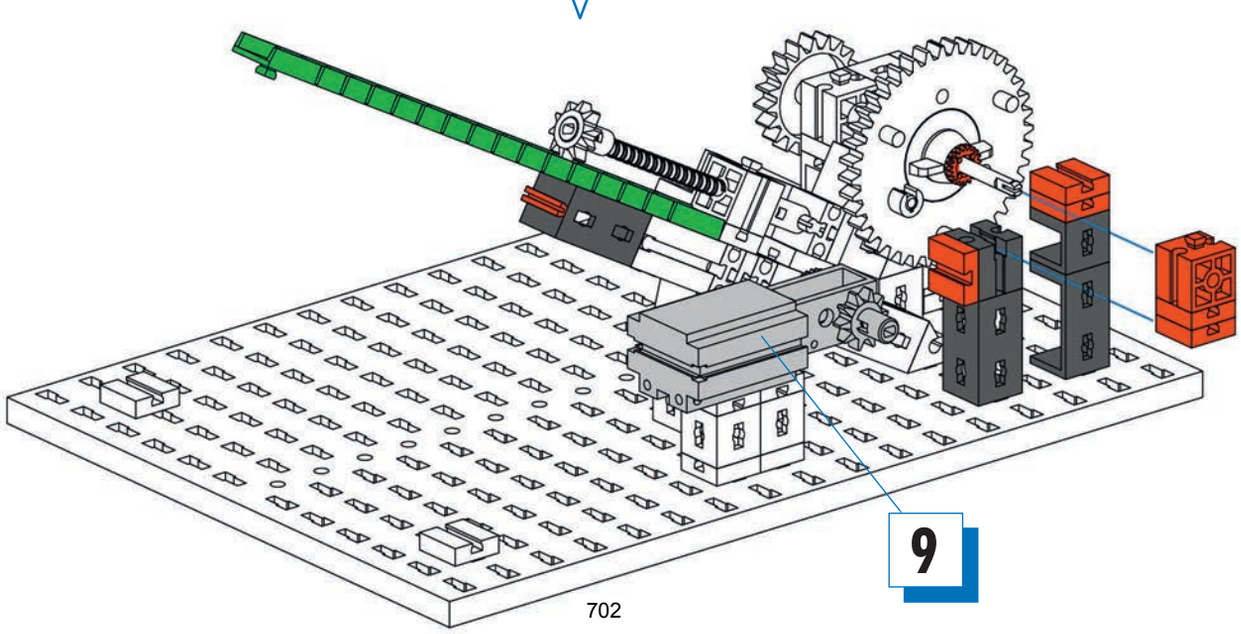
9

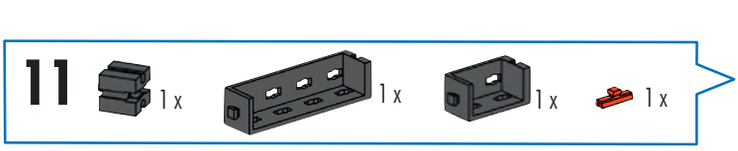
11
1 x
1 x
1 x
1 x

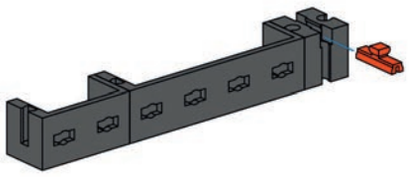

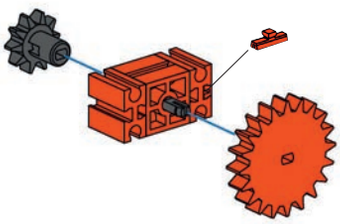

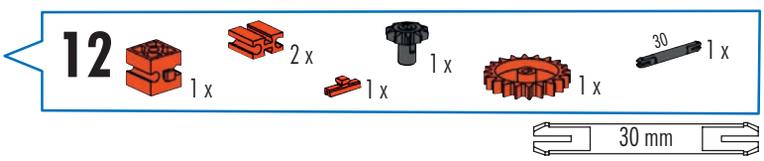
12
1 x
2 x
1 x
1 x
1 x
30
1 x
30 mm

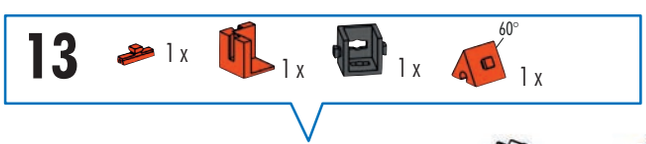
13
1 x
1 x
1 x
60°
1 x

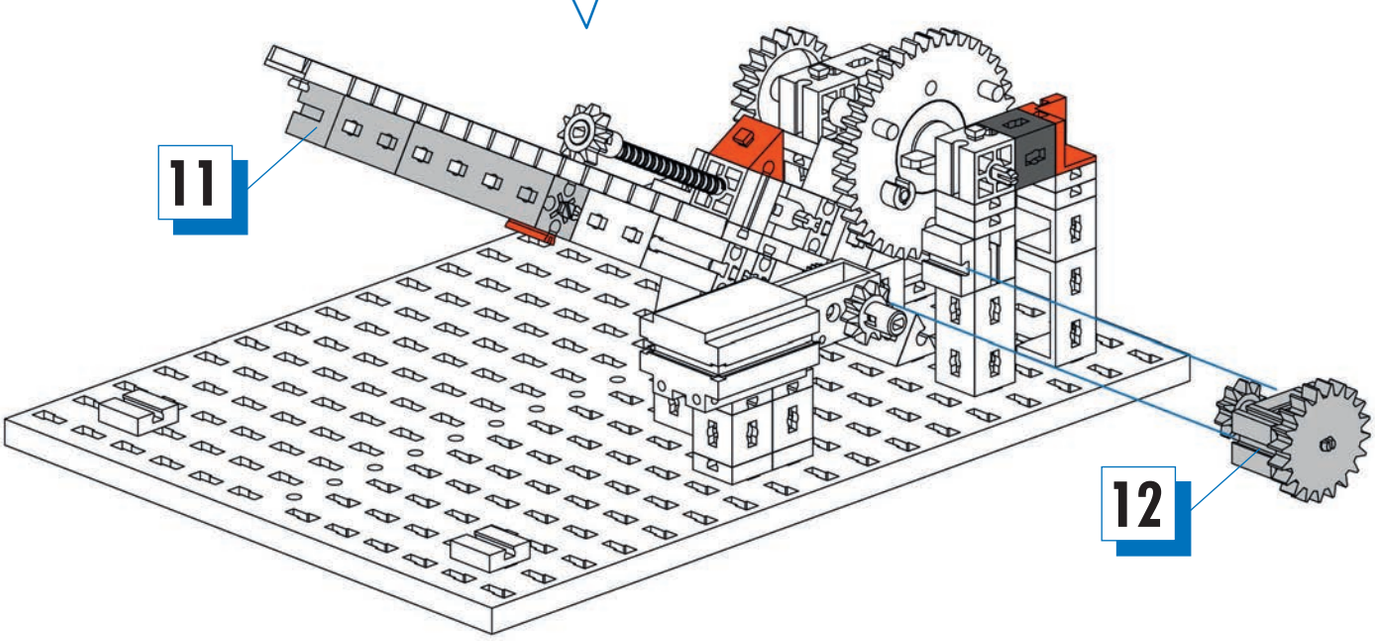
11
12

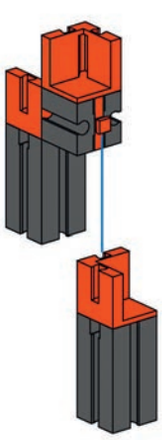

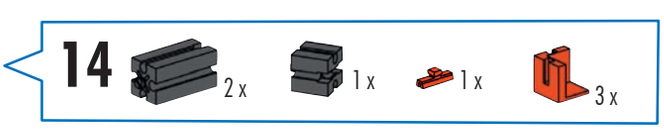
14
2 x
1 x
1 x
3 x

15 1 x 2 x 1 x 1 x 1 x

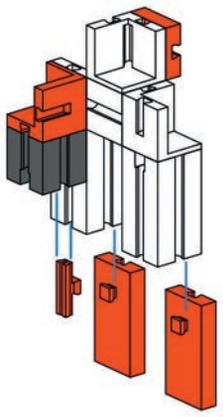

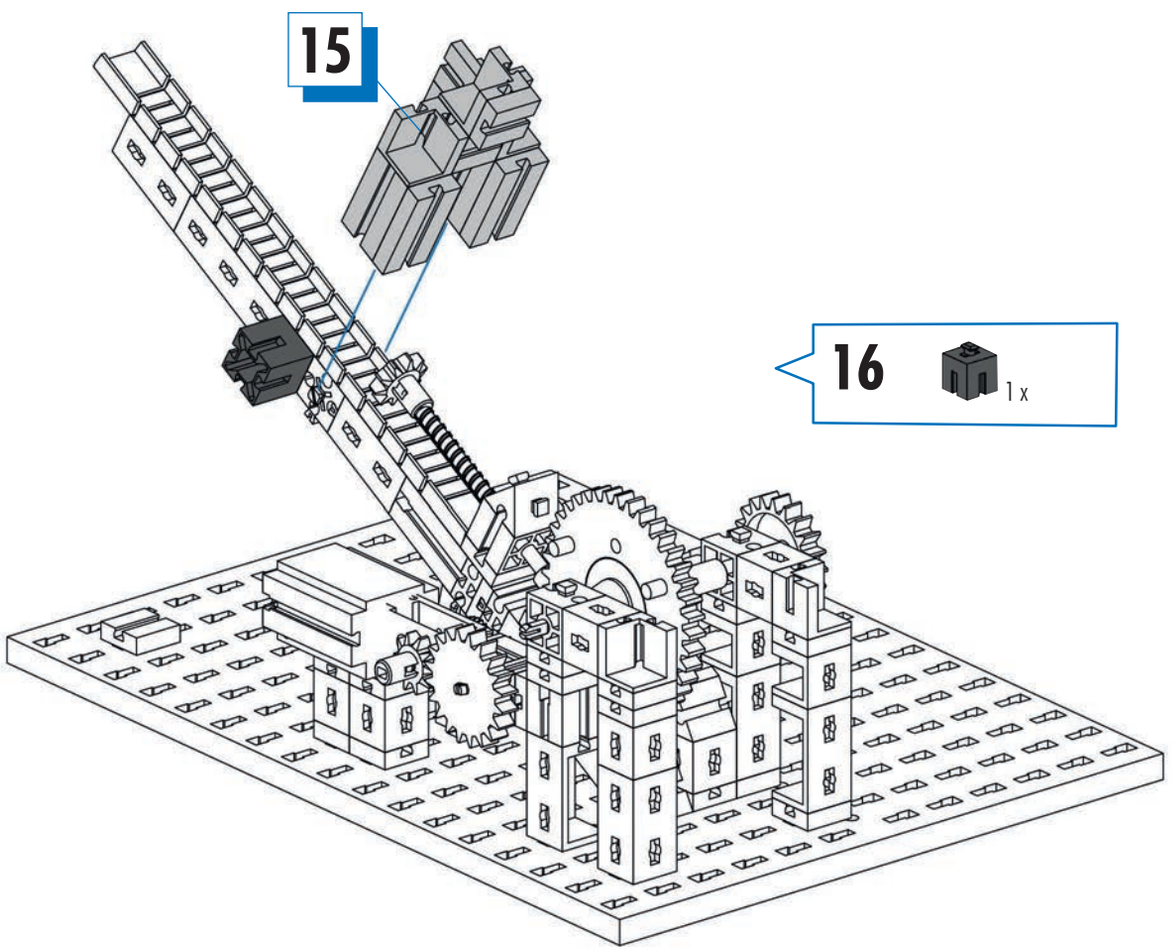

16 1 x

17 1 x 1 x 30° 1 x 60° 1 x 1 x 1 x

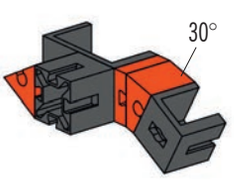

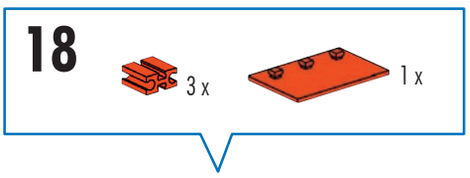
18
3 x
1 x

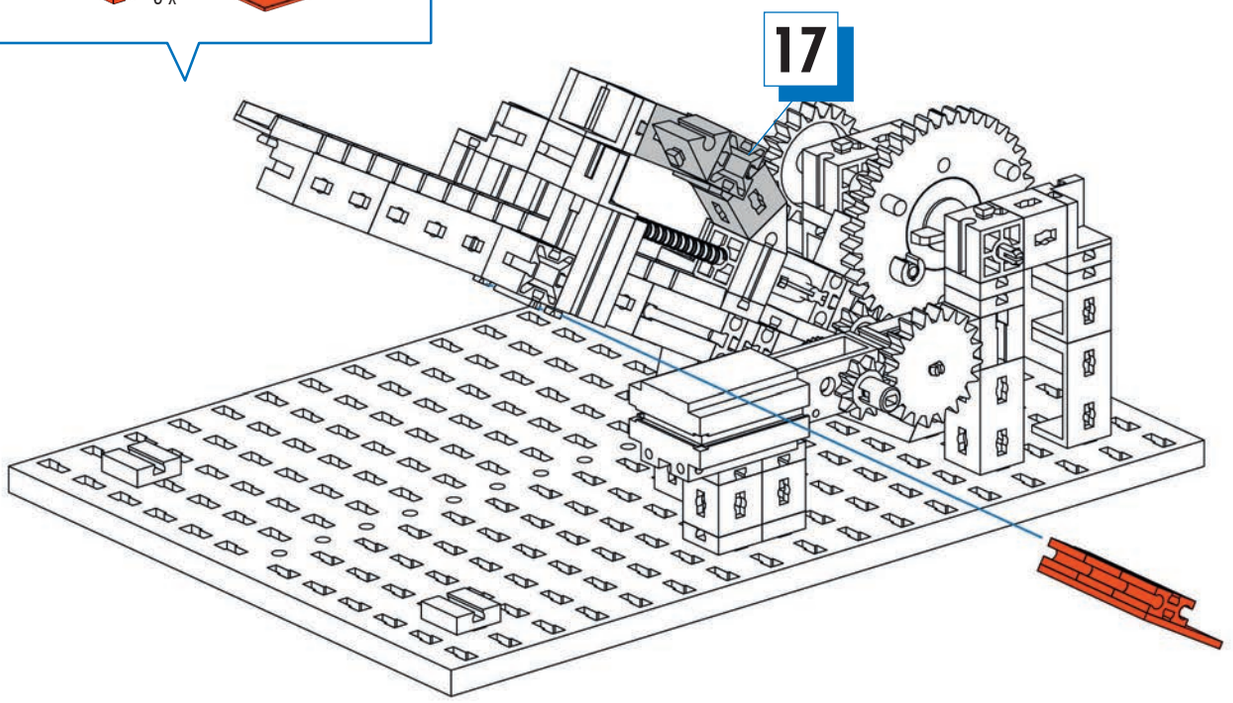
17

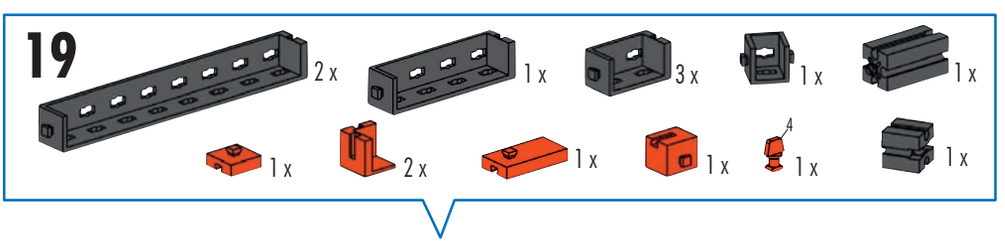
19
2 x
1 x
3 x
1 x
1 x
1 x
2 x
1 x
1 x
A
1 x
1 x

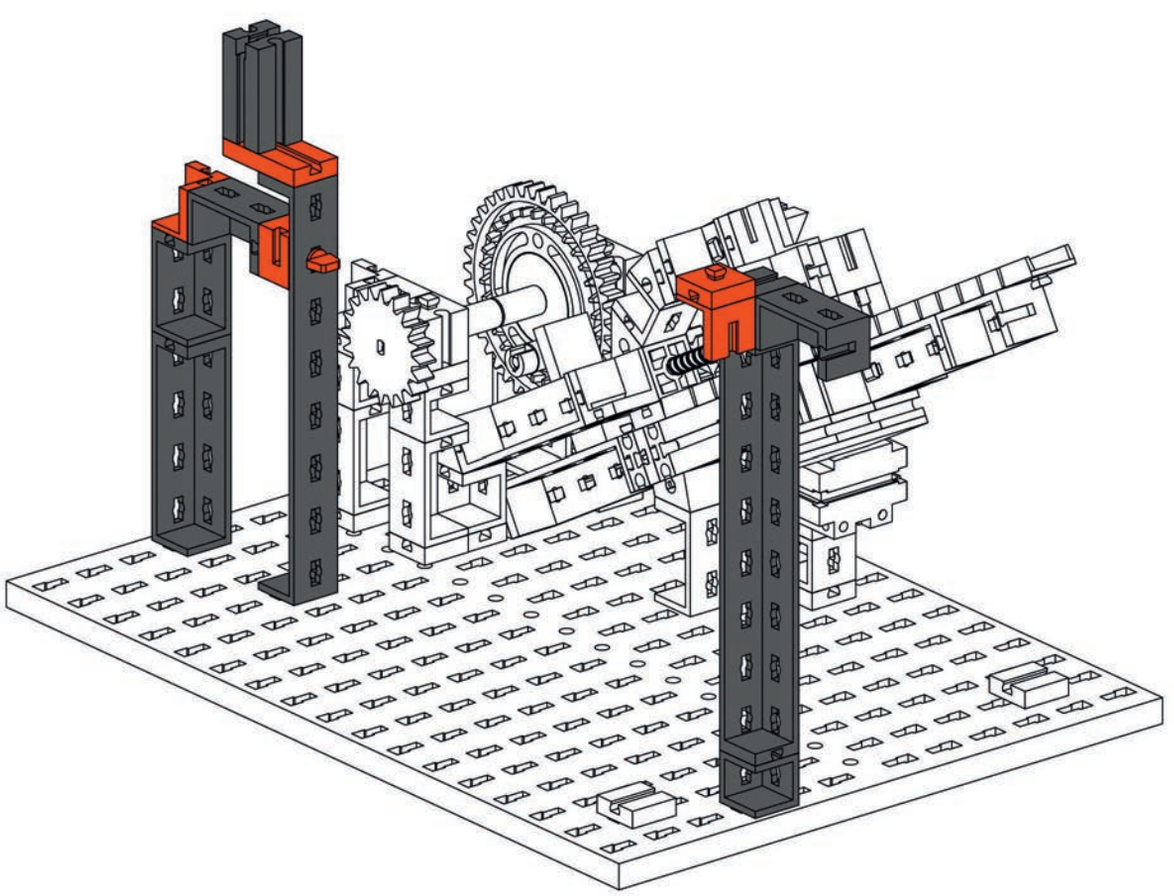

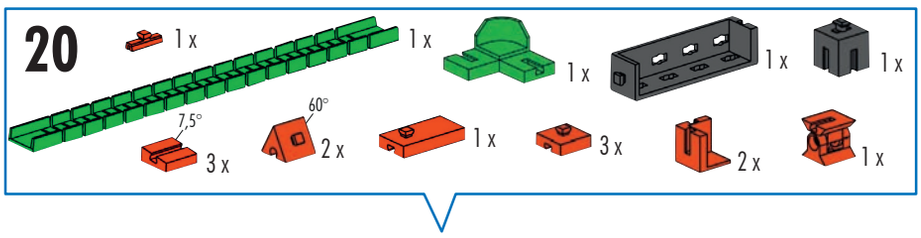
20
1 x
1 x
1 x
1 x
1 x
7,5°
3 x
60°
2 x
1 x
3 x
2 x
1 x

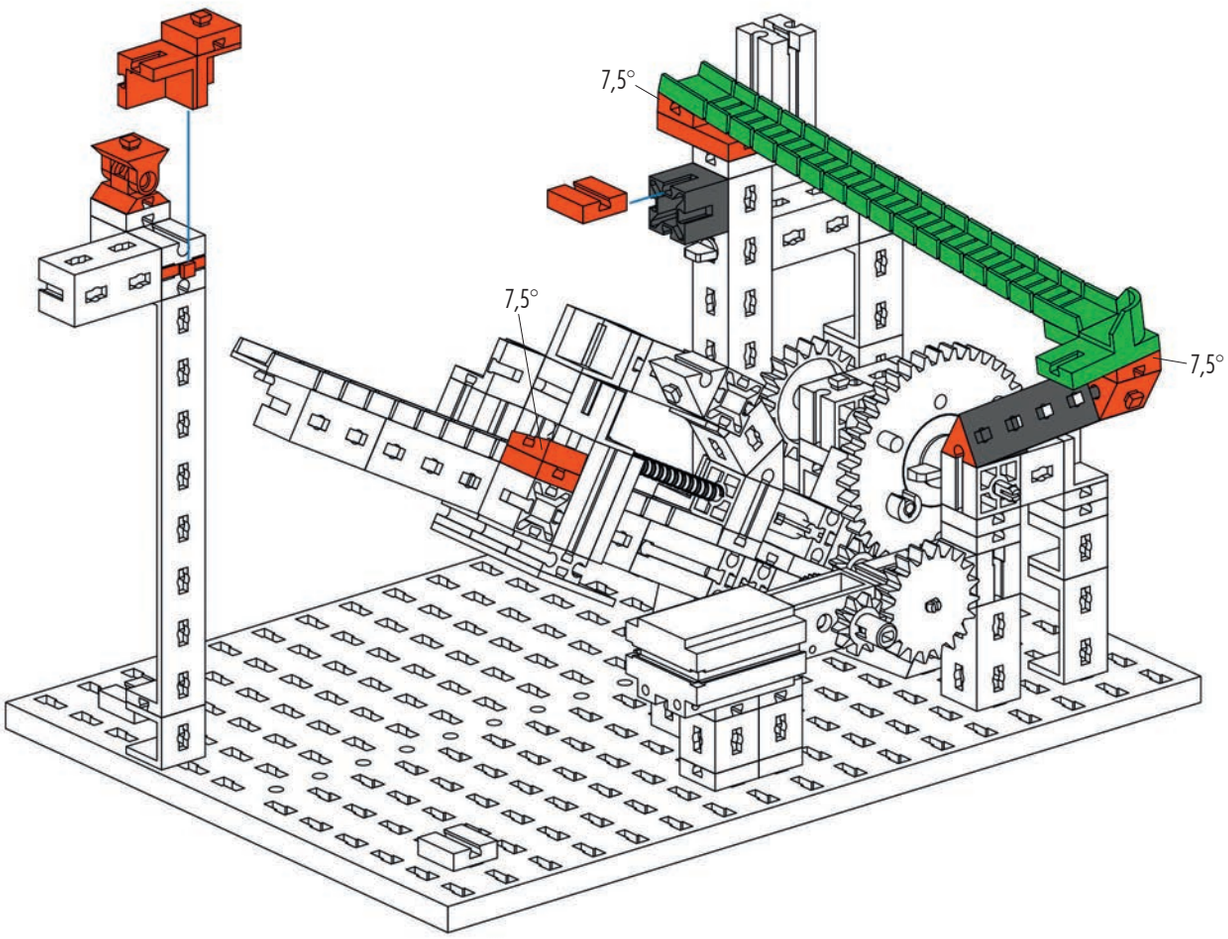
7,5°
7,5°
7,5°

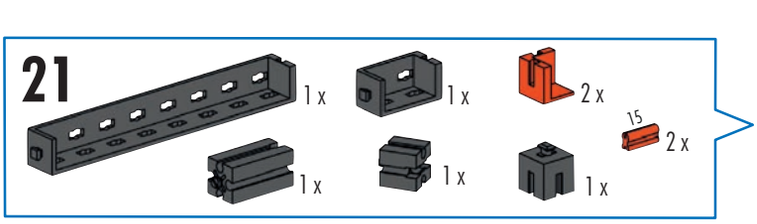
21
1 x
1 x
2 x
15
2 x
1 x
1 x
1 x

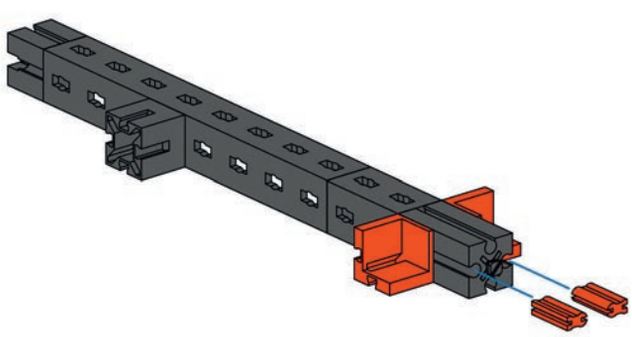

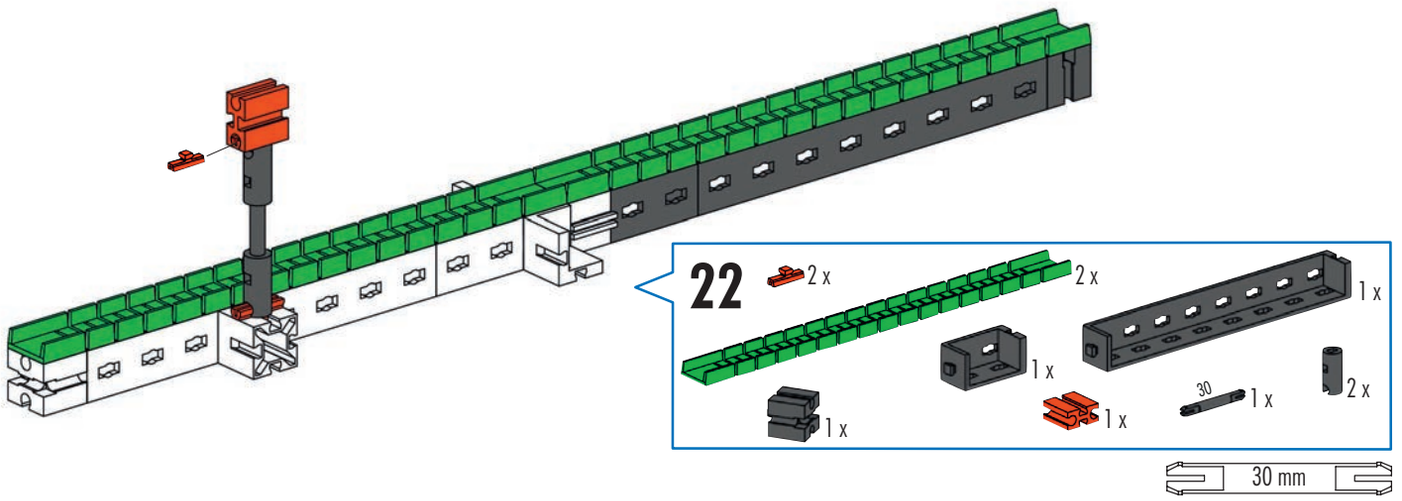
22
2 x
2 x
1 x
1 x
30
1 x
2 x
1 x
1 x
30 mm

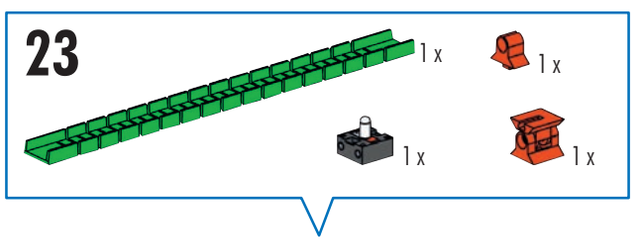
23
1 x
1 x
1 x
1 x

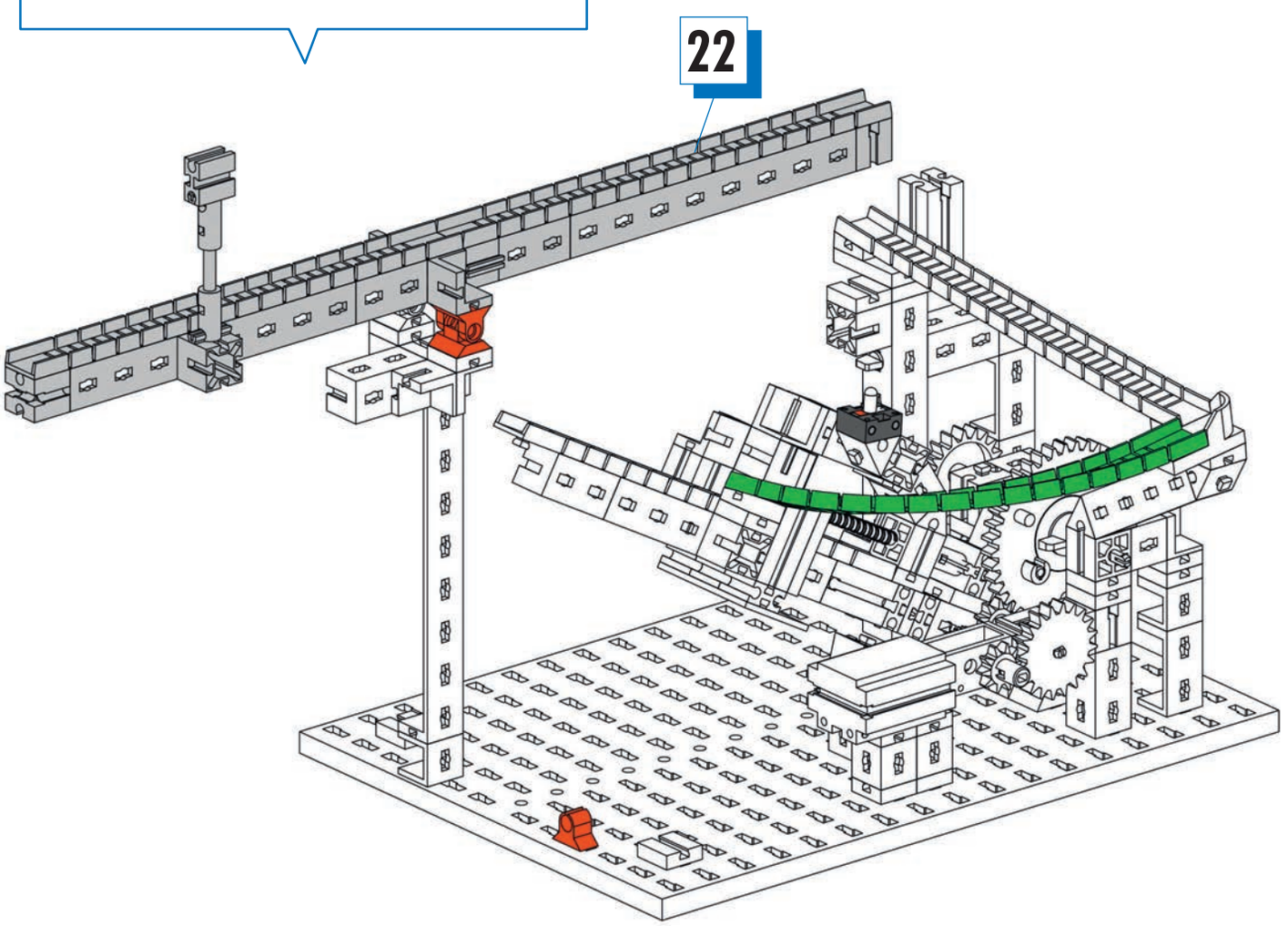
22

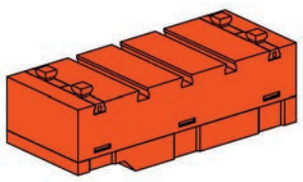

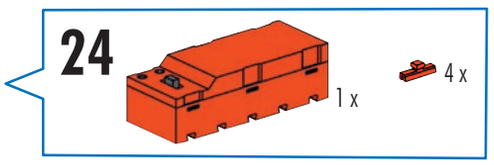
24
1 x
4 x

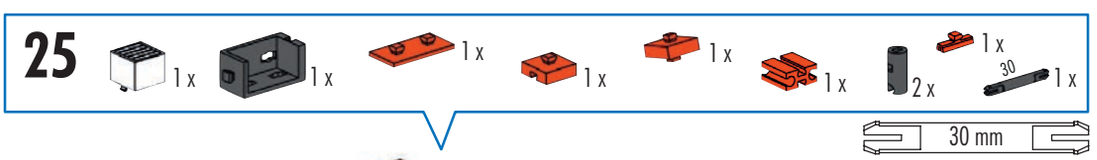
25
1 x
1 x
1 x
1 x
1 x
1 x
2 x
1 x
30
1 x
30 mm

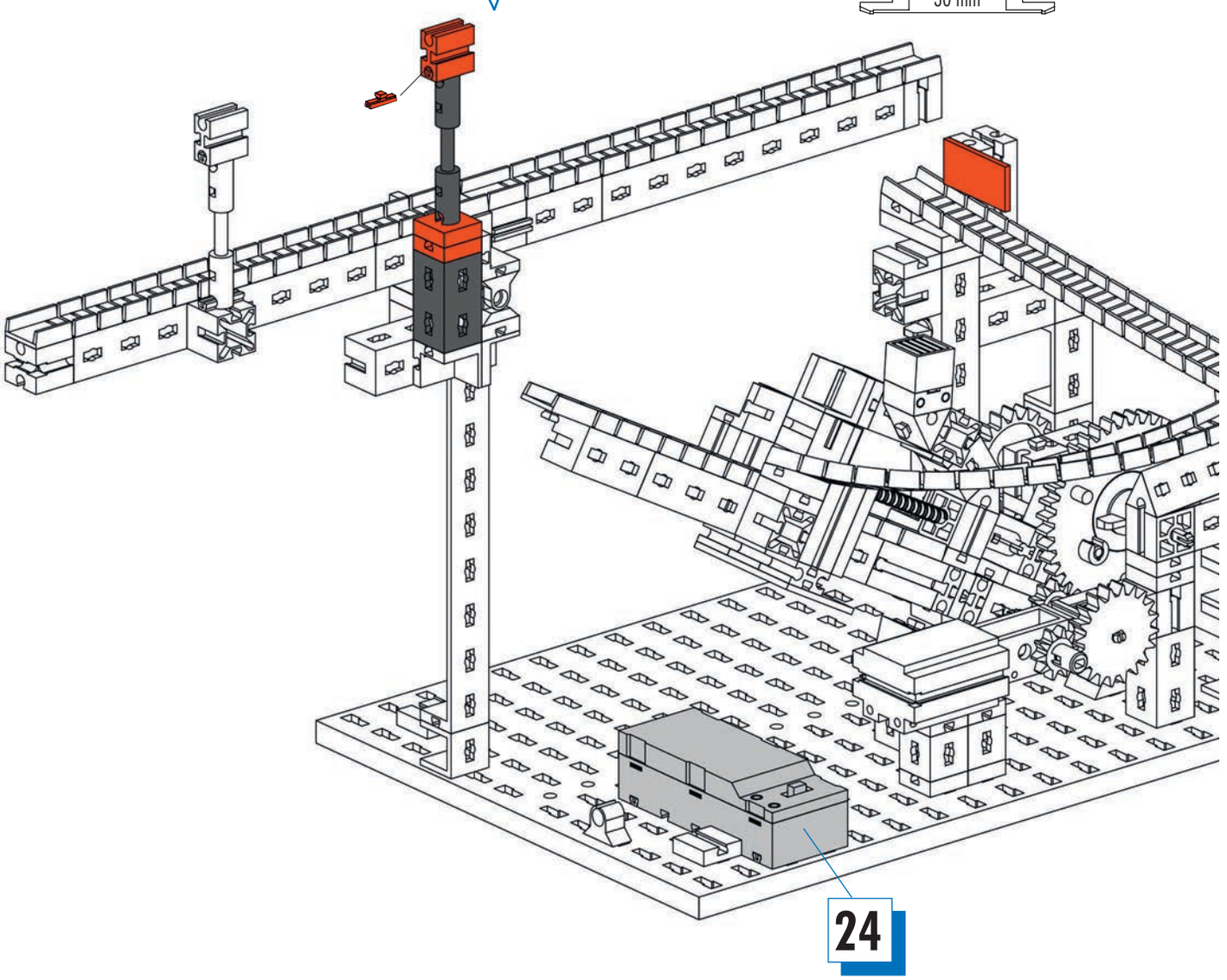
24

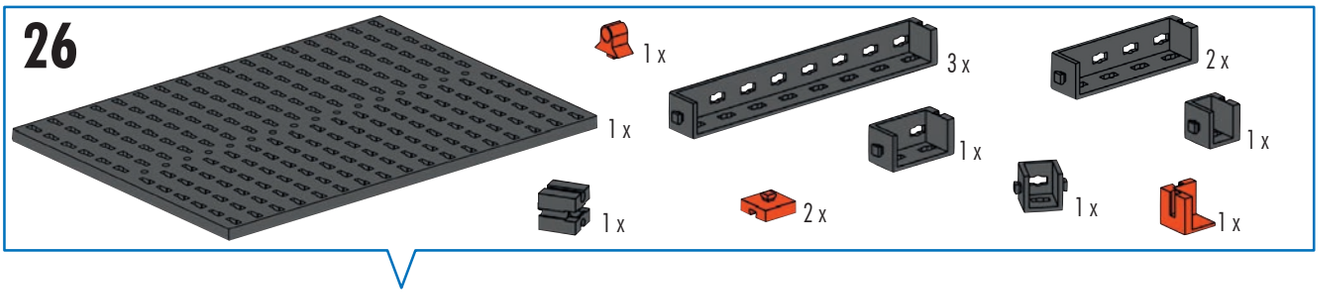
26
1 x
3 x
2 x
1 x
1 x
1 x
2 x
1 x
1 x

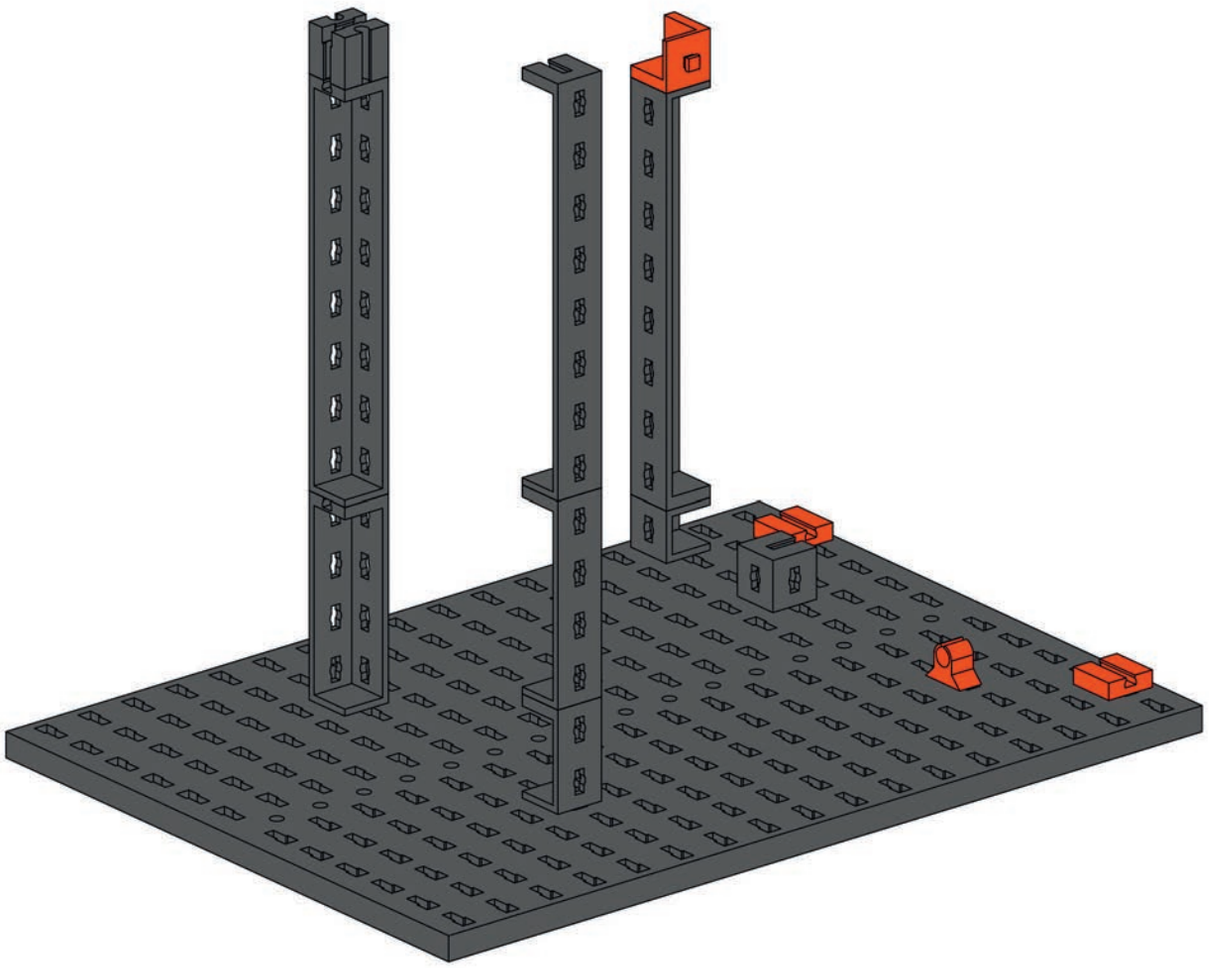

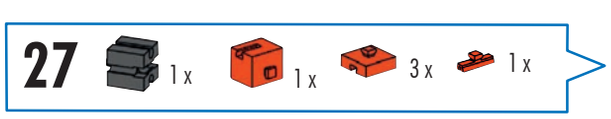
27
1 x
1 x
3 x
1 x

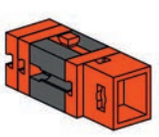

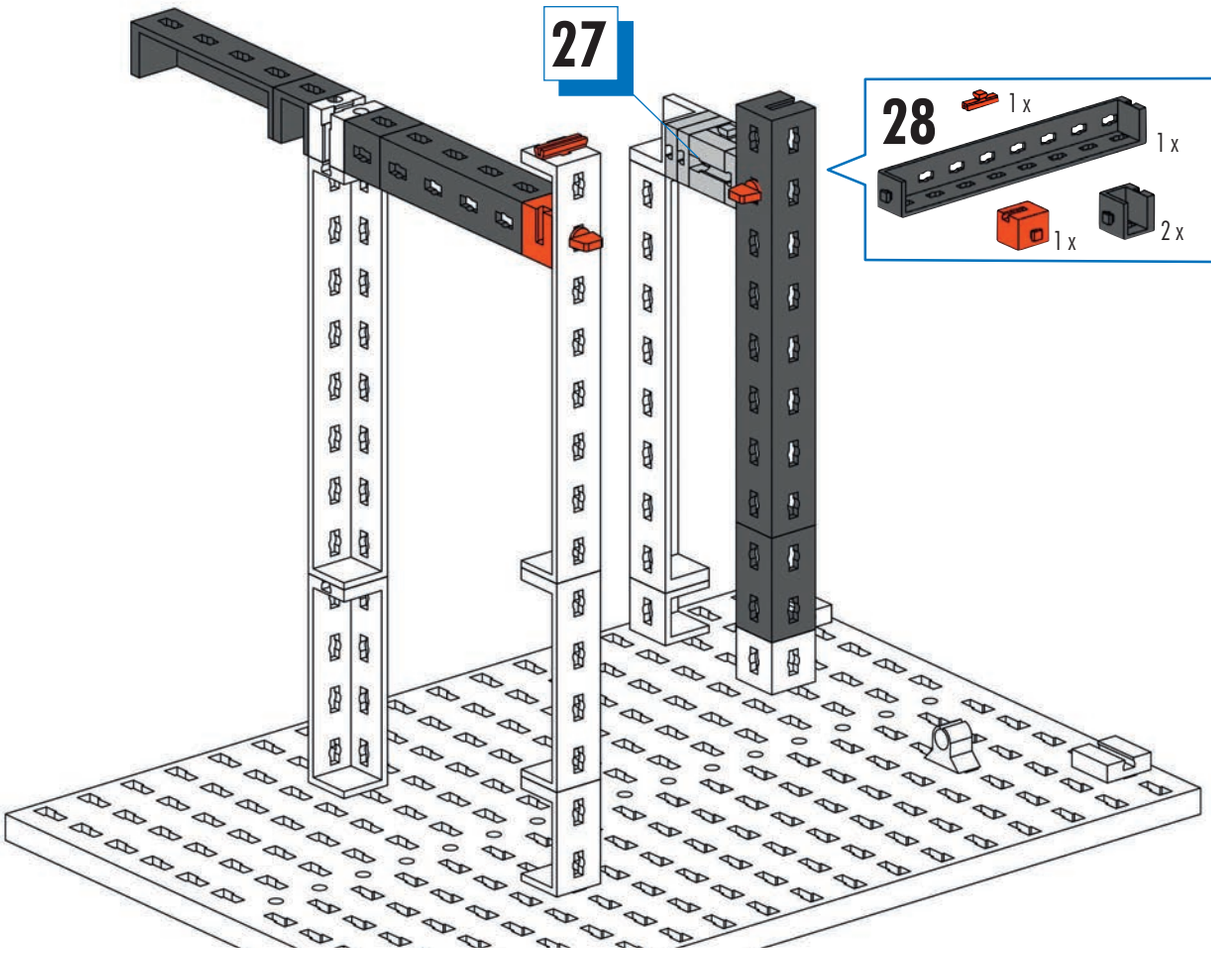
27
28
1 x
1 x
2 x
1 x
2 x
1 x
4
2 x

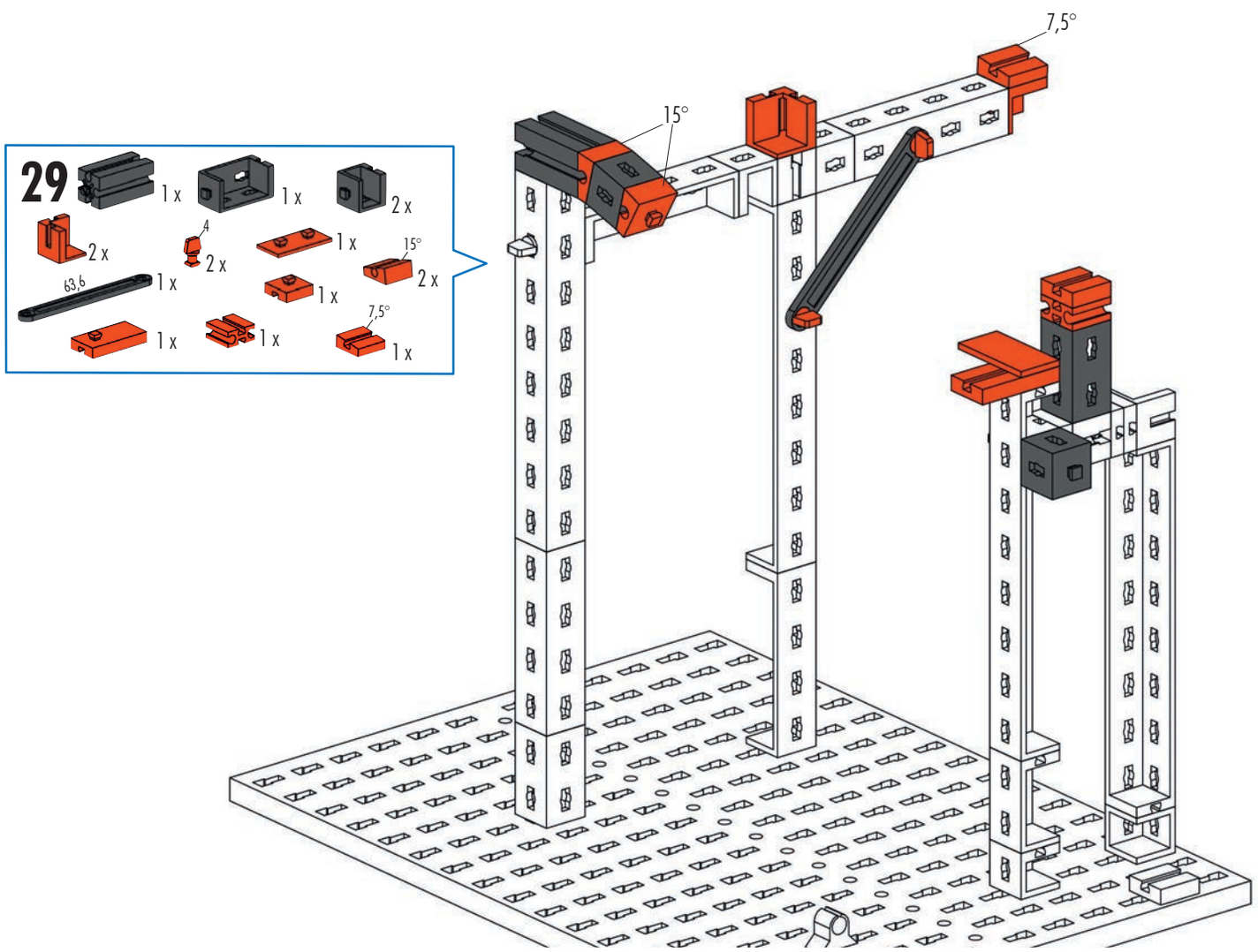
29
1 x
1 x
2 x
2 x
4
2 x
1 x
15°
2 x
63,6
1 x
1 x
1 x
7,5°
1 x
7,5°
15°

710

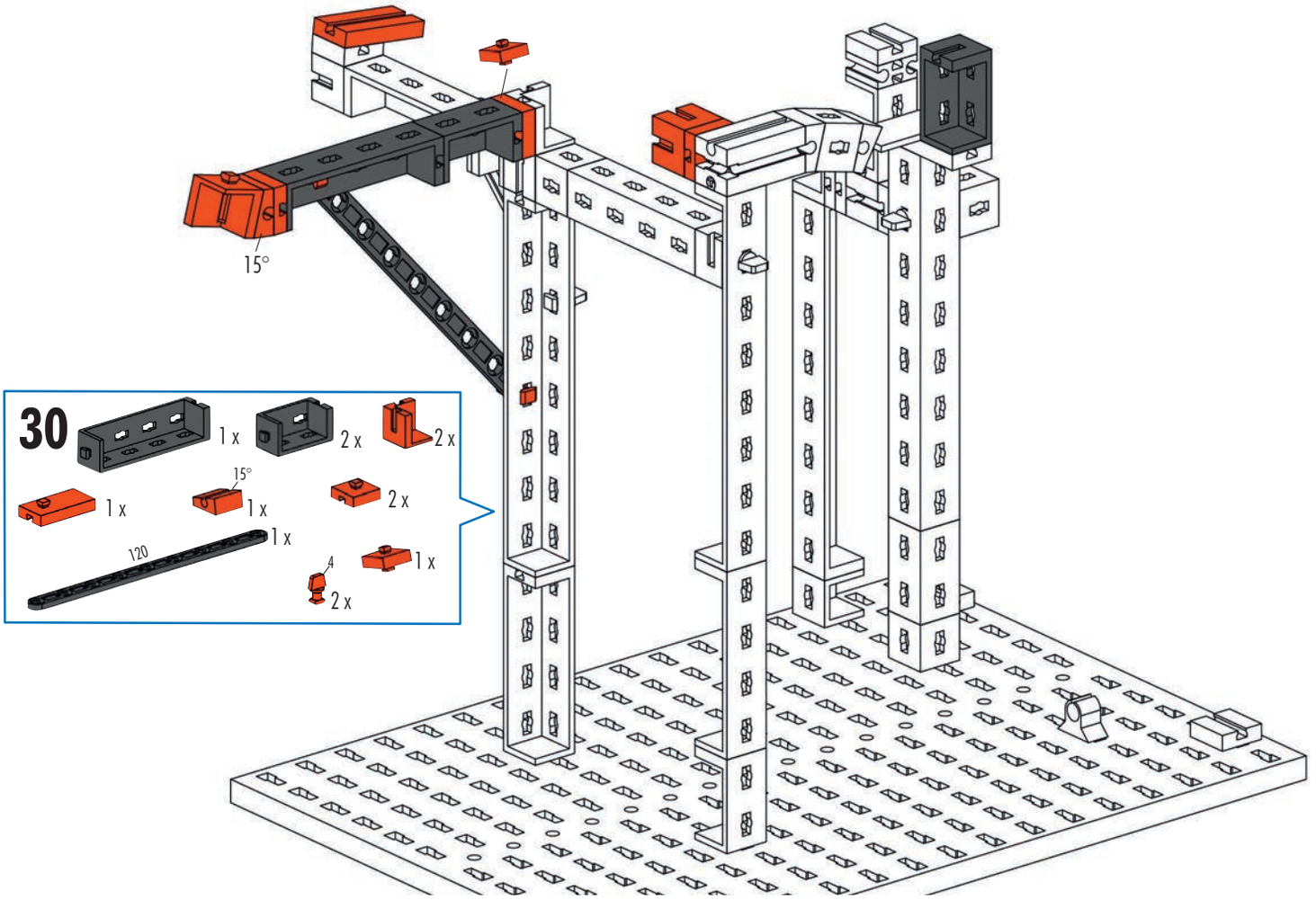
15°
30
1 x
2 x
2 x
15°
1 x
1 x
2 x
1 x
120
4
1 x
2 x

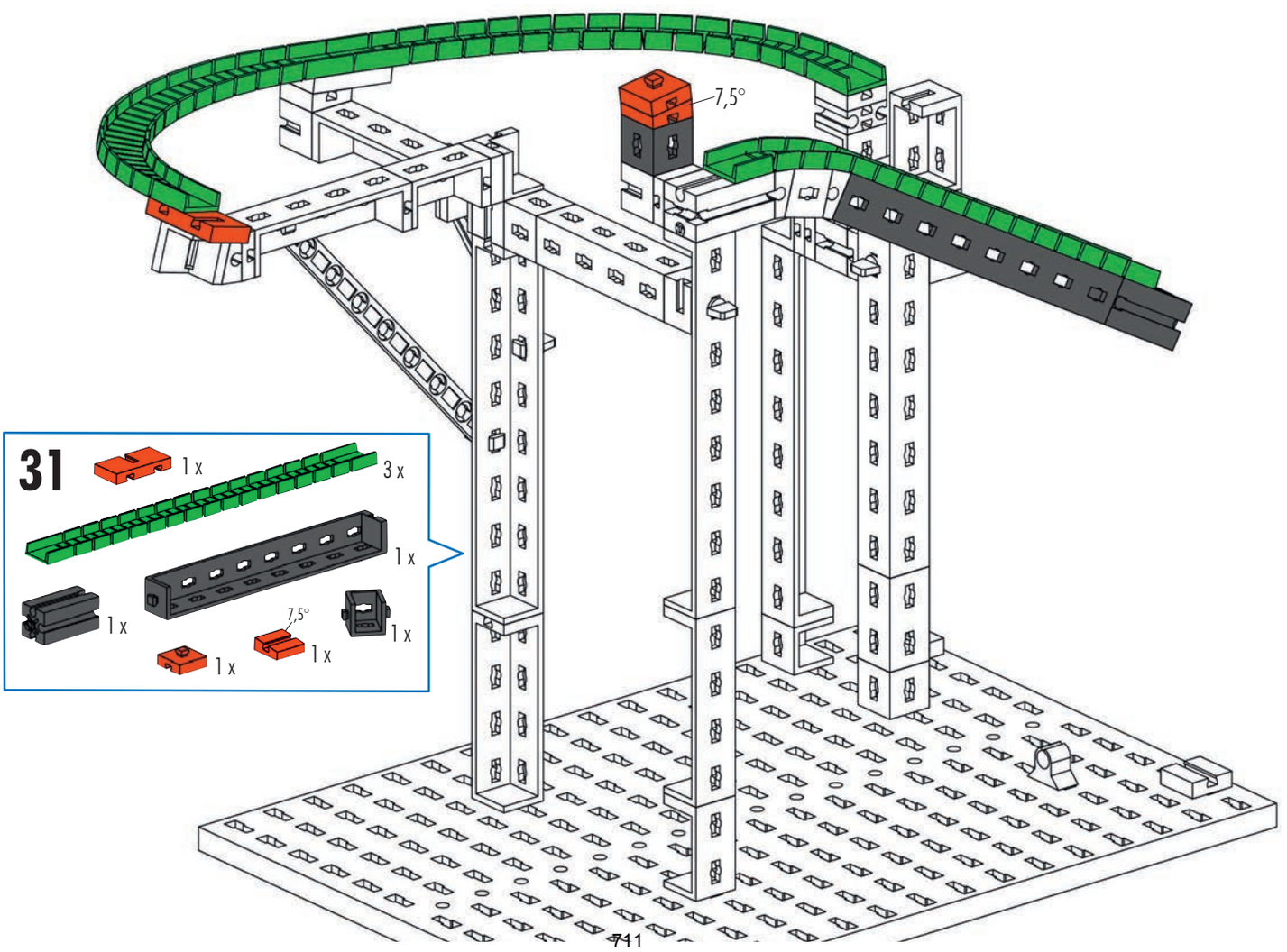
7,5°
31
1 x
3 x
1 x
1 x
7,5°
1 x
1 x
1 x

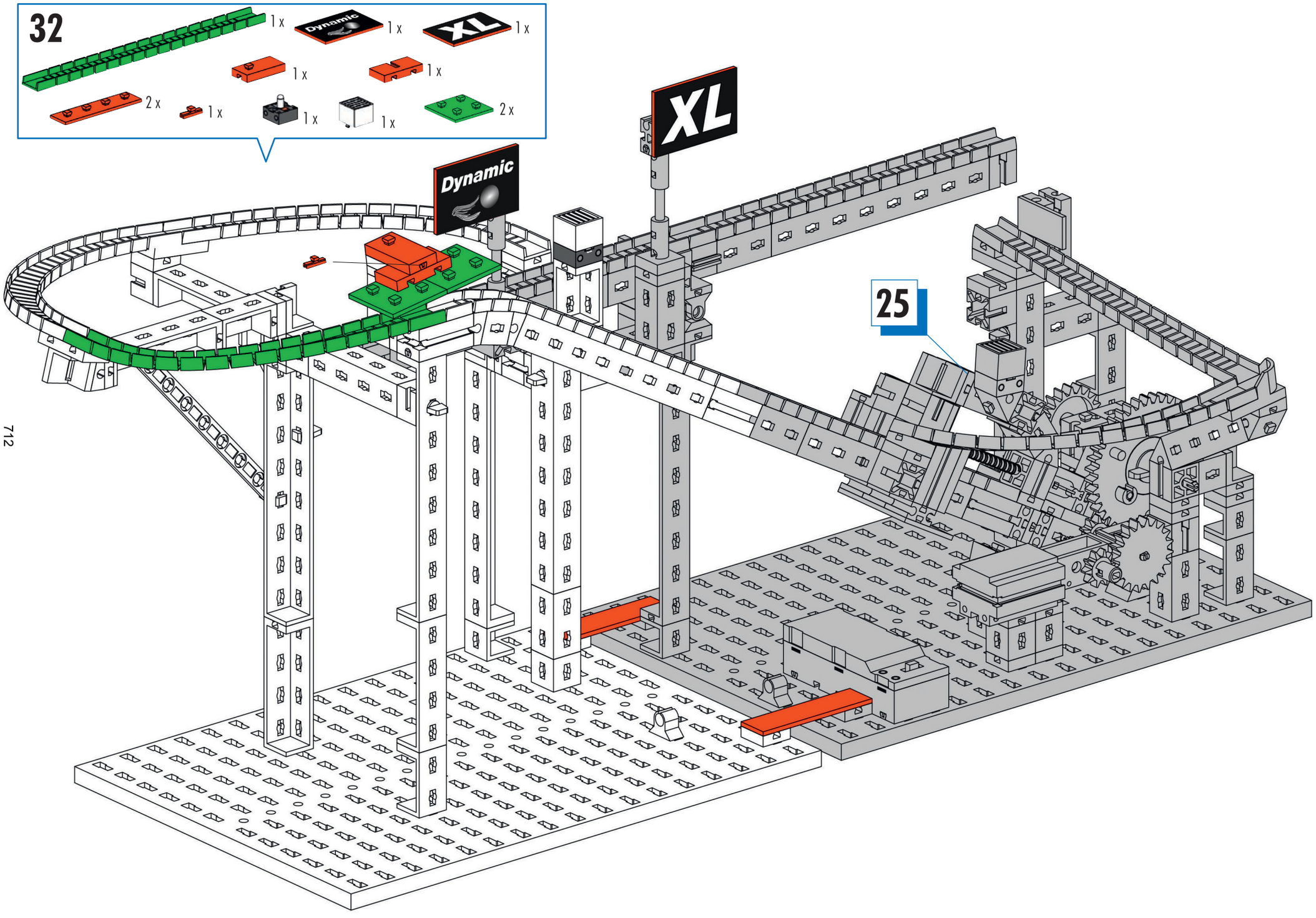
32
1 x
Dynamic
1 x
XL
1 x
1 x
1 x
2 x
1 x
1 x
1 x
2 x
Dynamic
XL
25

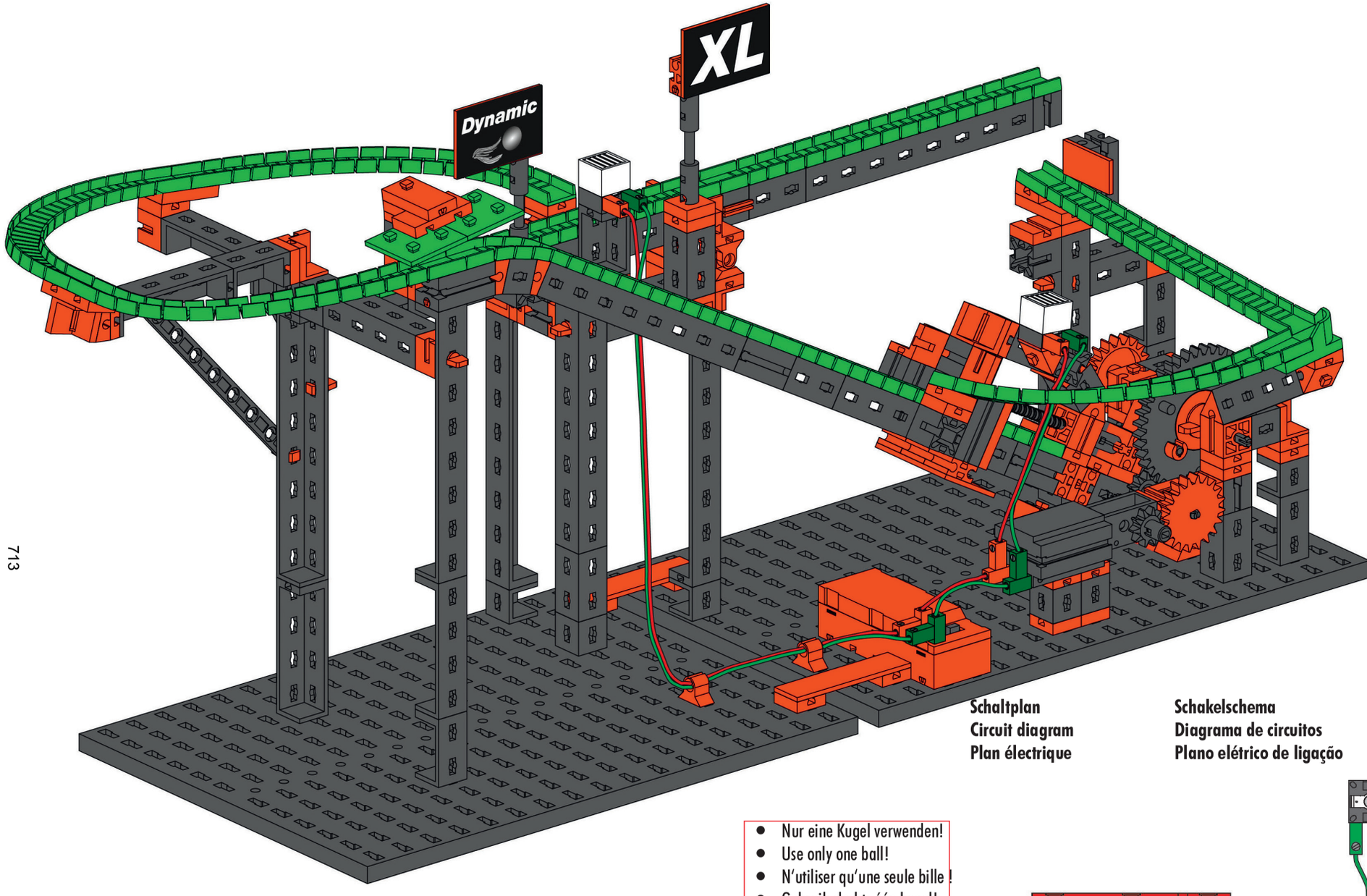

Schaltplan
Circuit diagram
Plan électrique

Schakelschema
Diagrama de circuitos
Plano elétrico de ligação

Schema elettrico
Схема подключения
电路图

- Nur eine Kugel verwenden!
- Use only one ball!
- N'utiliser qu'une seule bille !
- Gebruik slechts één kogel!
- ¡Emplear solo una bola!
- Utilize apenas uma esfera!
- Utilizzare una sola sfera!
- Используйте только один шарик!
- 只使用一个钢珠！

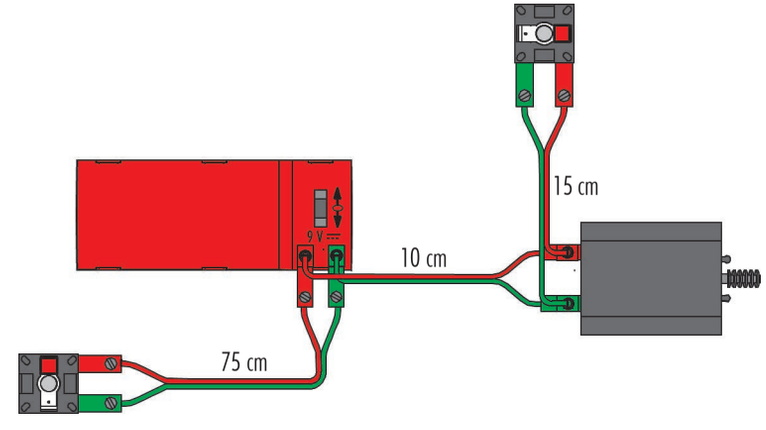

Ketten- und Schießförderer
Chain conveyor and spring launcher
Transporteur à chaîne lance-bille
Kettingtransporteur en schietmechanisme
Transportador de cadena y de disparo
Transportadora de corrente e de arremesso
Convogliatore a catena e a tiro
Цепной и выстреливающий транспортёр
链式和弹射式输送机混合搭配

1-18 **Schießförderer**
Spring launcher
Lance-bille
Schietmechanisme
Transportador de disparo
Transportadora de arremesso
Convogliatore a tiro
Выстреливающий транспортёр
弹射式输送机

Seite	75
Page	75
Page	75
Bladzijde	75
Página	75
Pagina	75
Pagina	75
Страница	75
页次	75

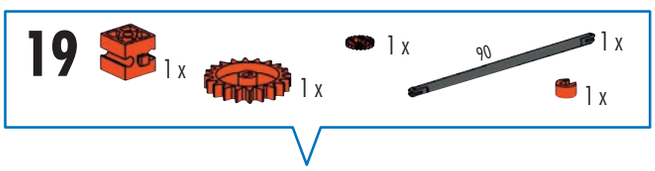

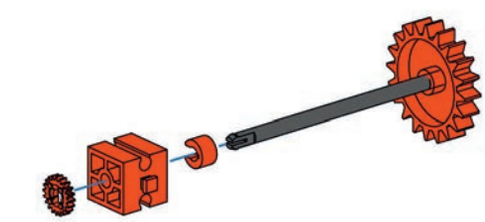

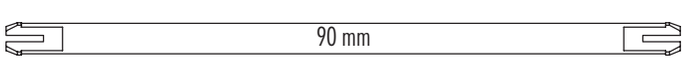

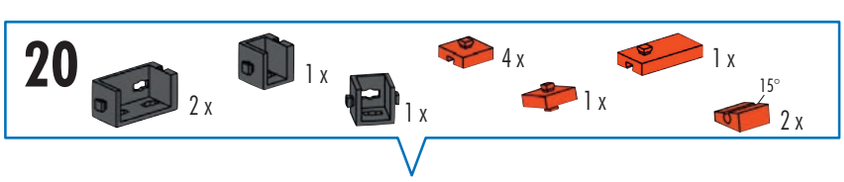

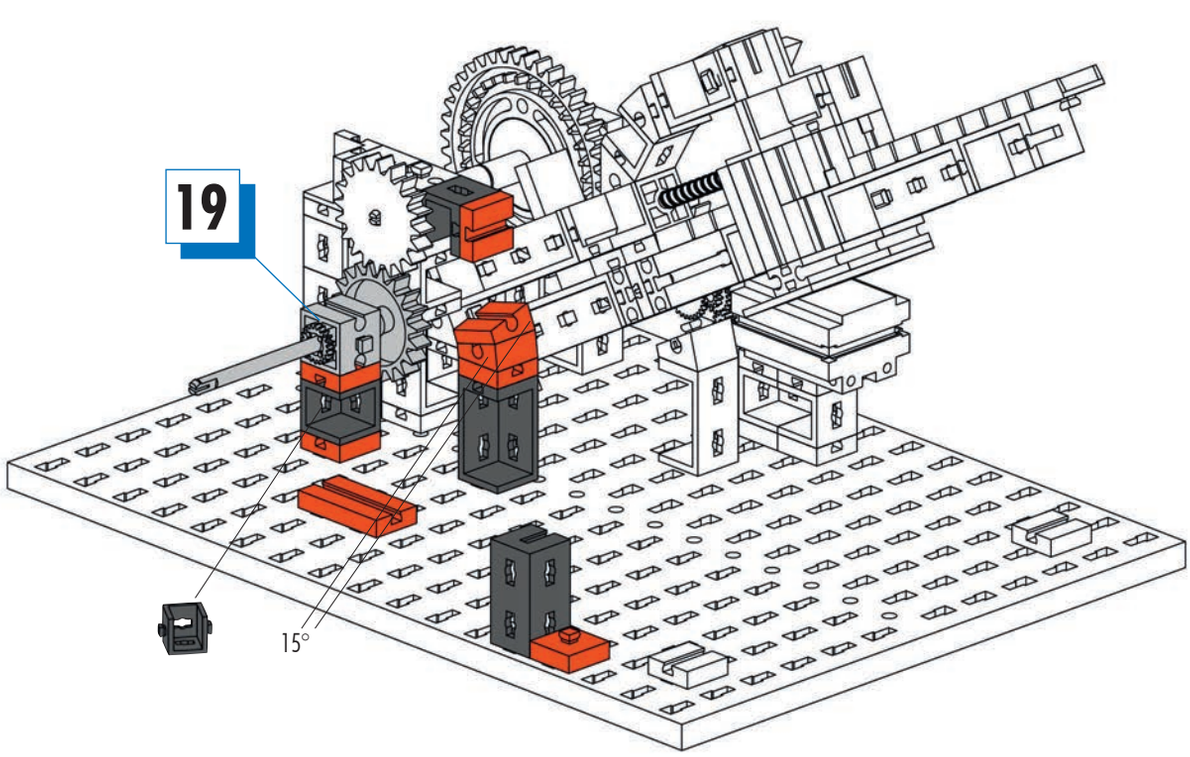

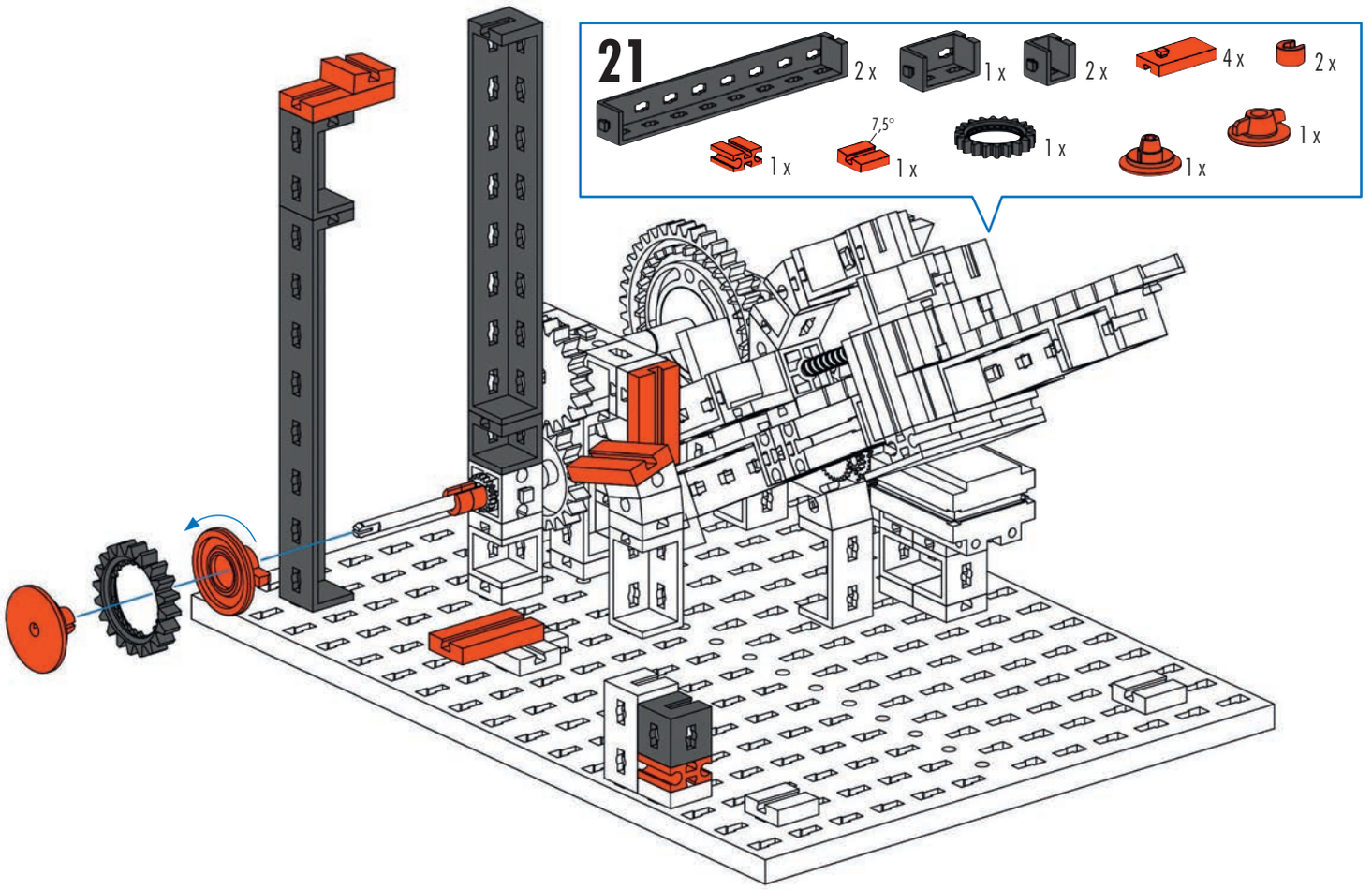

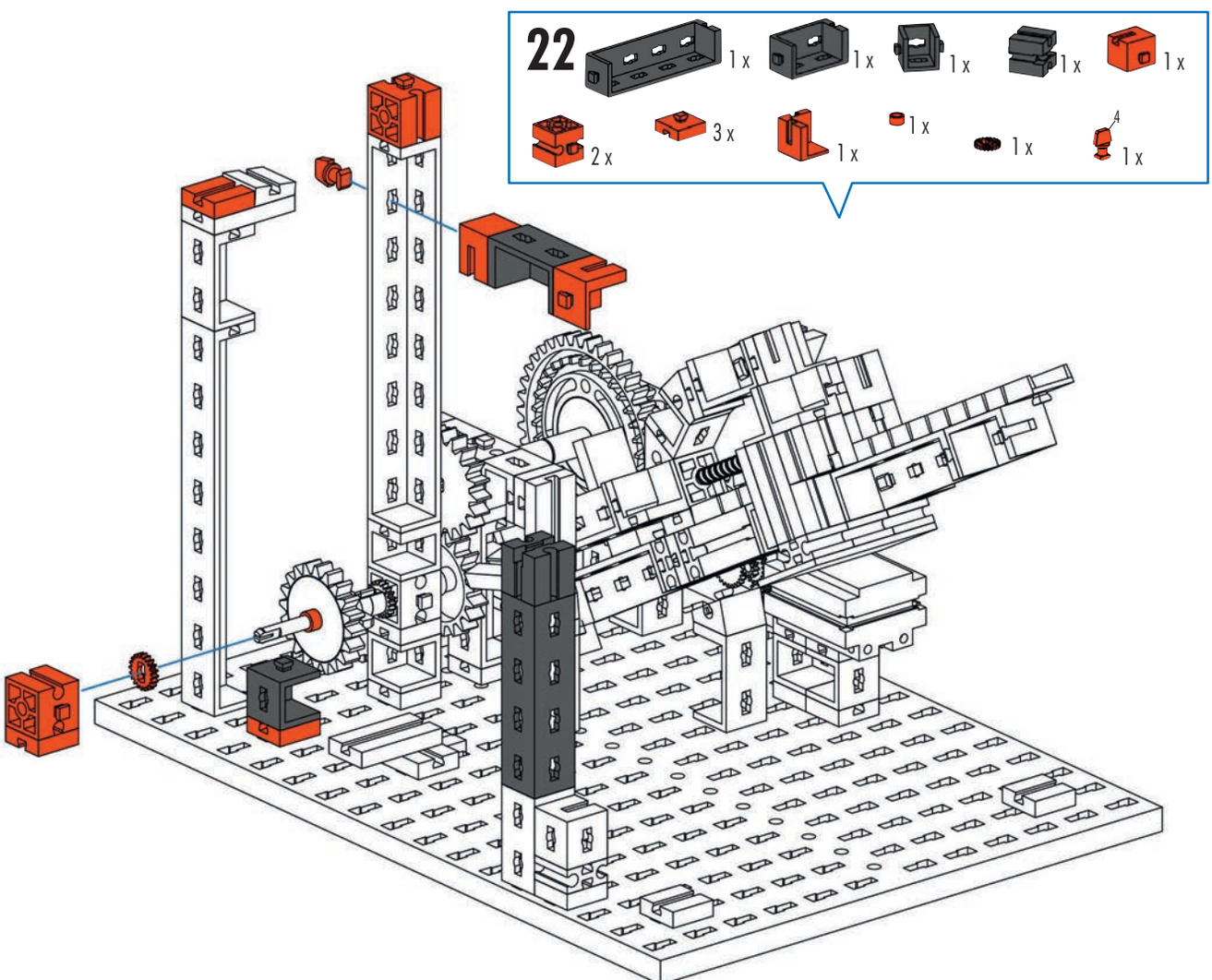

715

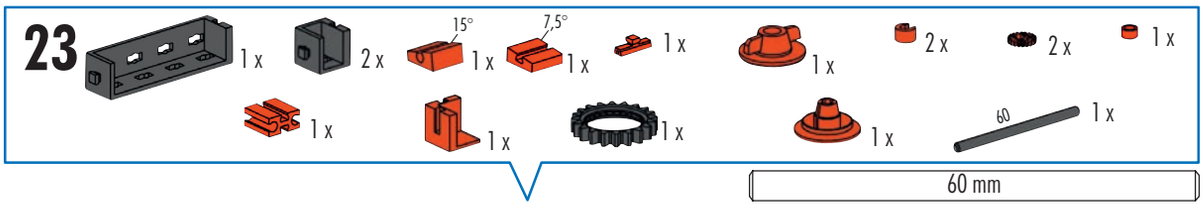
23
1 x
2 x
15°
1 x
7,5°
1 x
1 x
1 x
2 x
2 x
1 x
1 x
1 x
1 x
1 x
60
1 x
60 mm

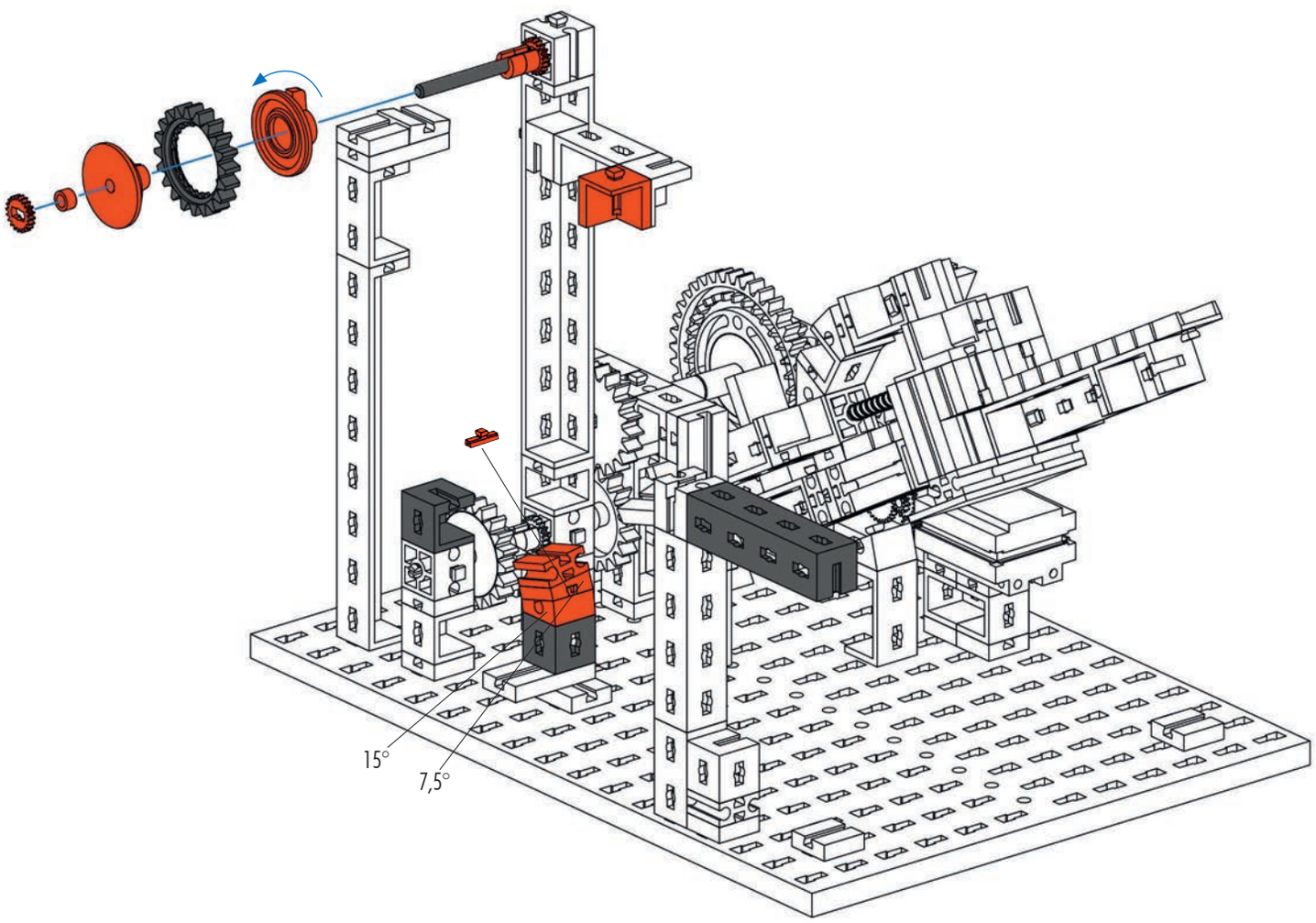
15°
7,5°

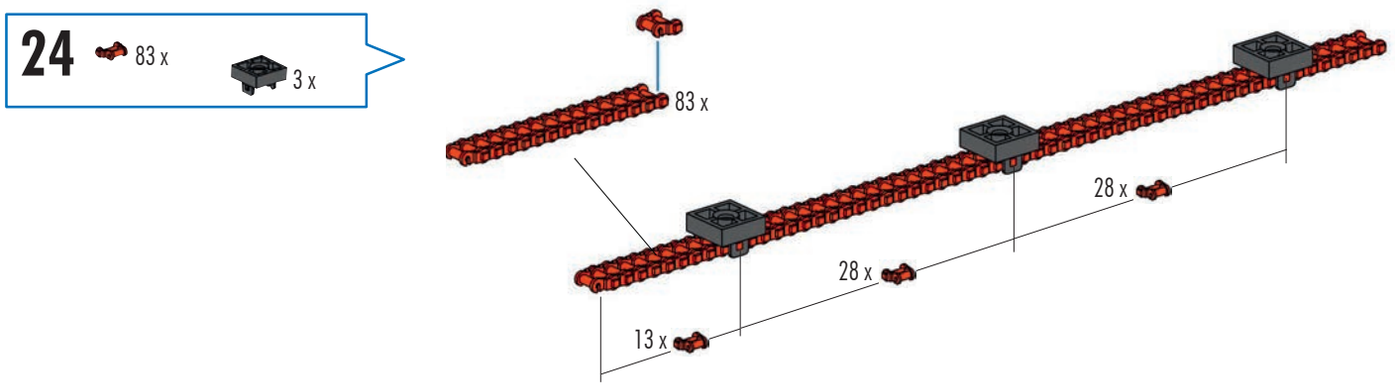
24
83 x
3 x
83 x
28 x
28 x
13 x

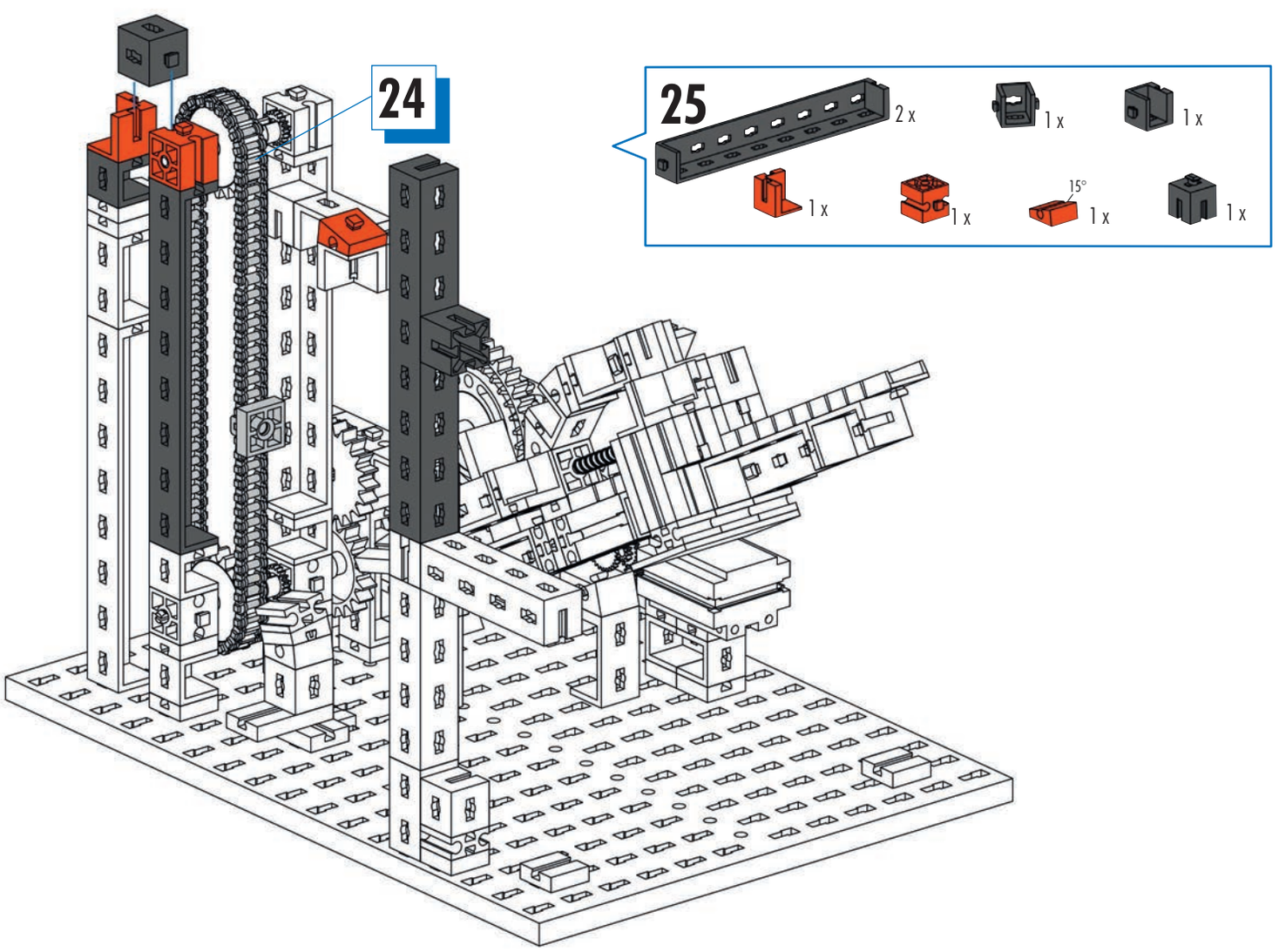
24
25
2 x
1 x
1 x
1 x
1 x
15°
1 x
1 x

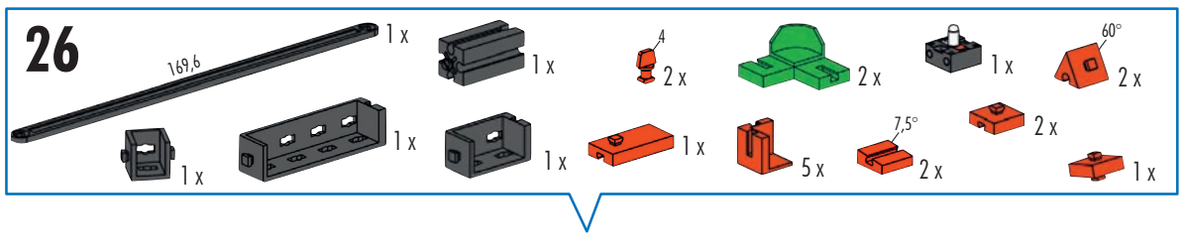
26
169,6
1 x
1 x
4
2 x
2 x
1 x
60°
2 x
1 x
1 x
1 x
1 x
5 x
7,5°
2 x
2 x
1 x

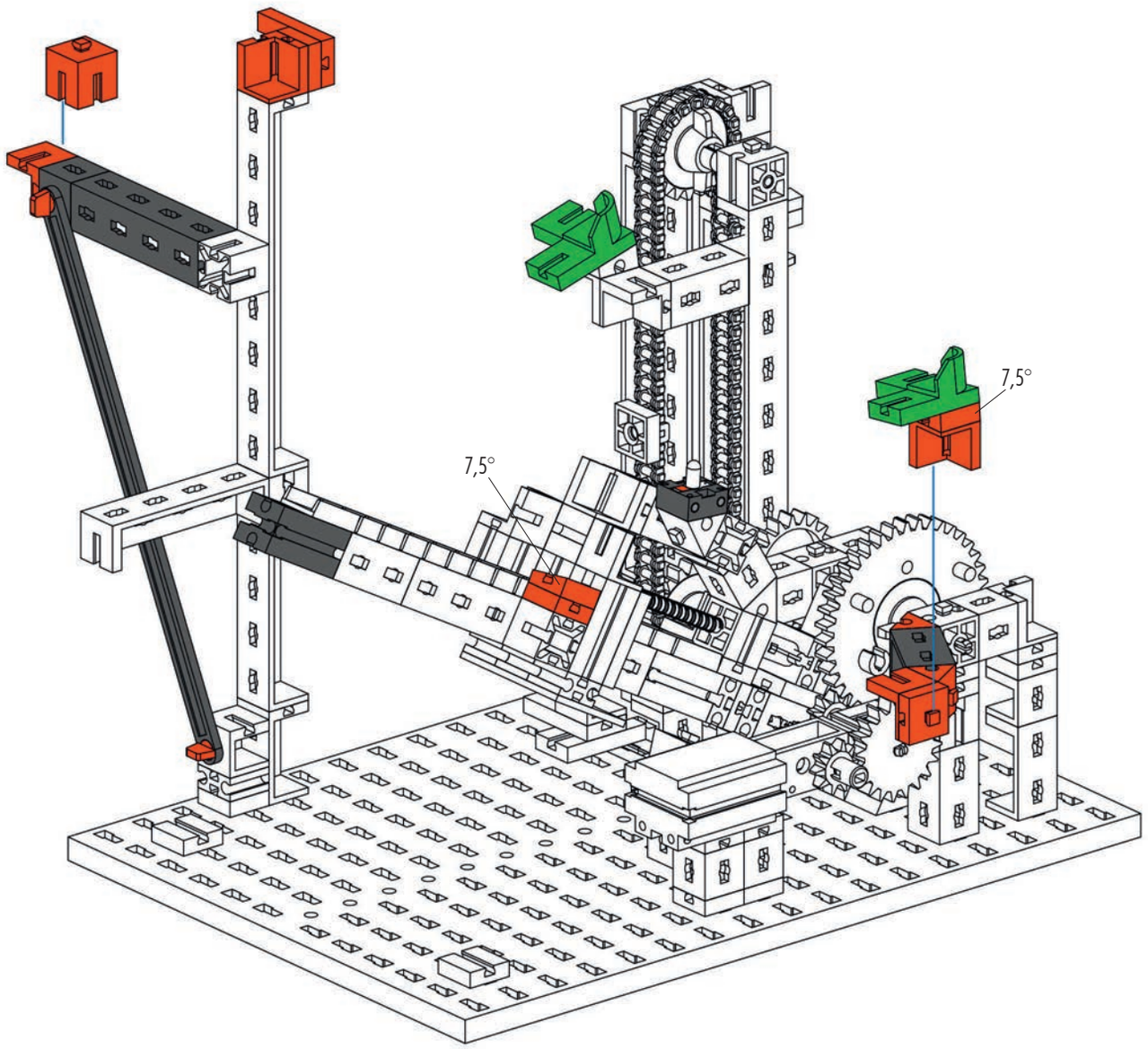
7,5°
7,5°

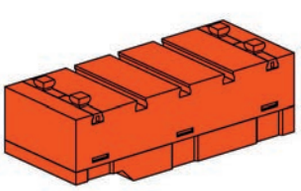

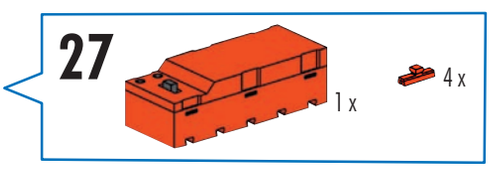
27
1 x
4 x

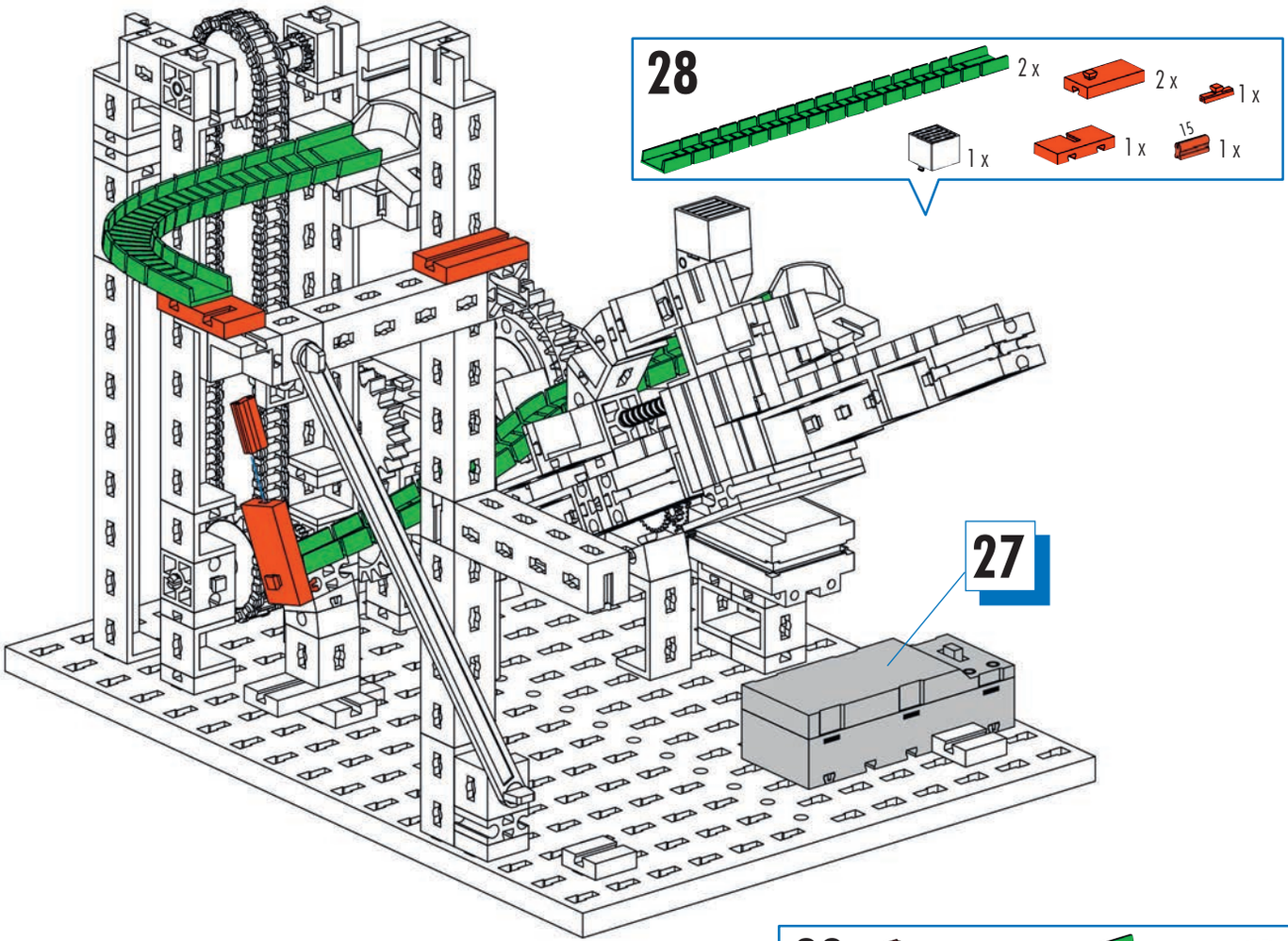
28
2 x
2 x
1 x
1 x
1 x
15
1 x
27

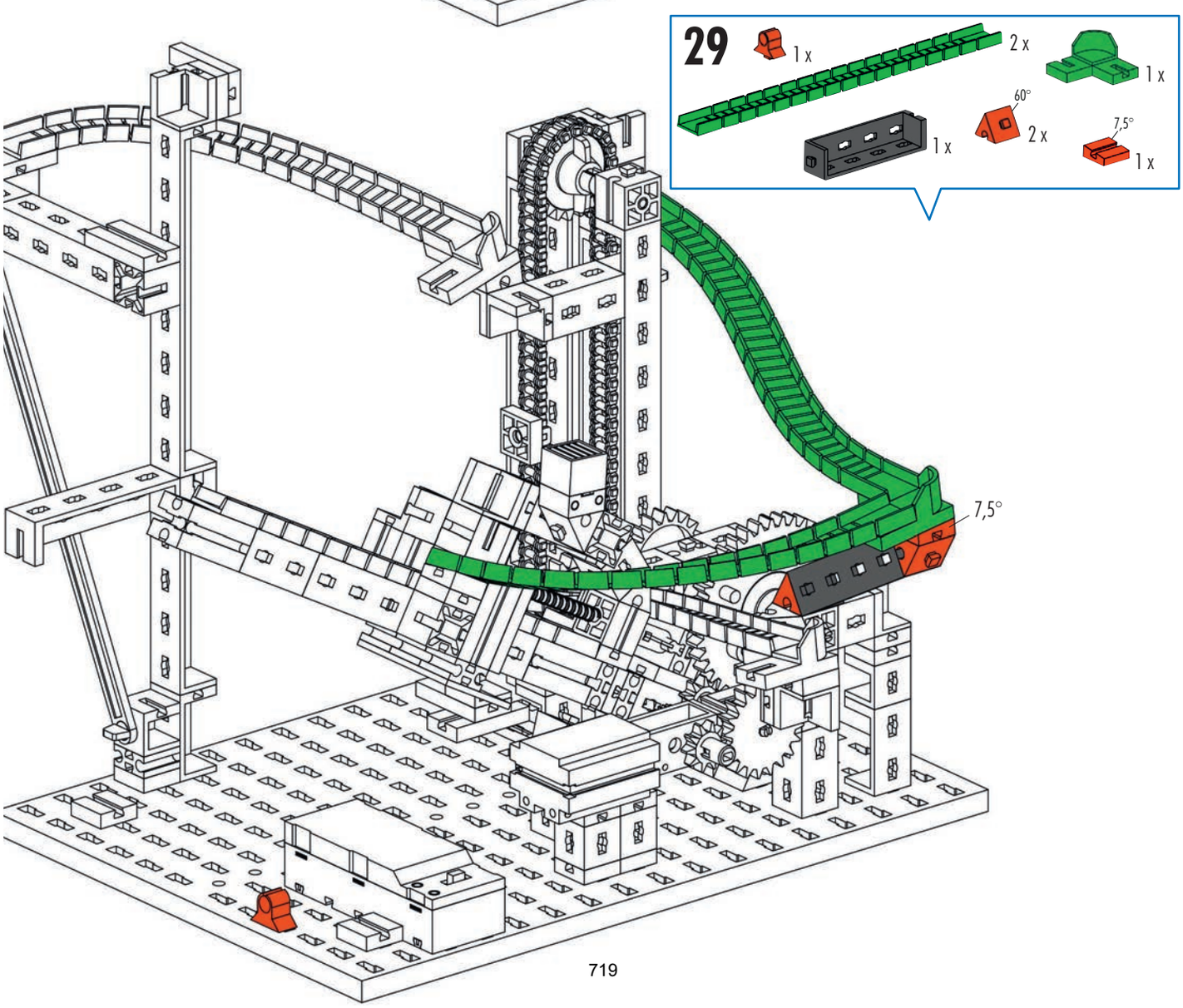
29
1 x
2 x
1 x
60°
2 x
1 x
7,5°
1 x
7,5°

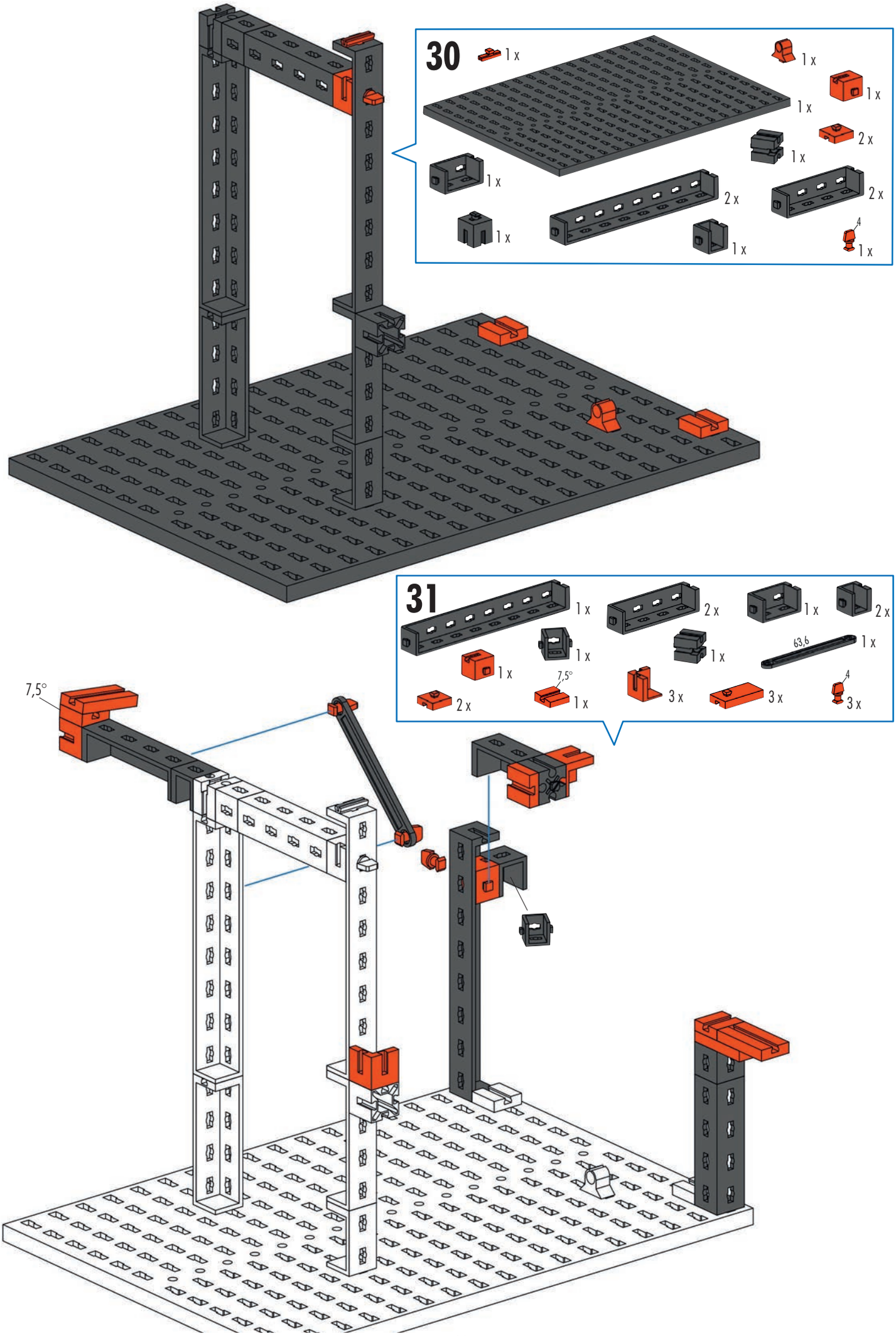
30
1 x
1 x
1 x
1 x
2 x
1 x
1 x
2 x
2 x
1 x
4
1 x
31
1 x
2 x
1 x
2 x
1 x
1 x
63,6
1 x
1 x
7,5°
2 x
1 x
3 x
3 x
4
3 x
7,5°

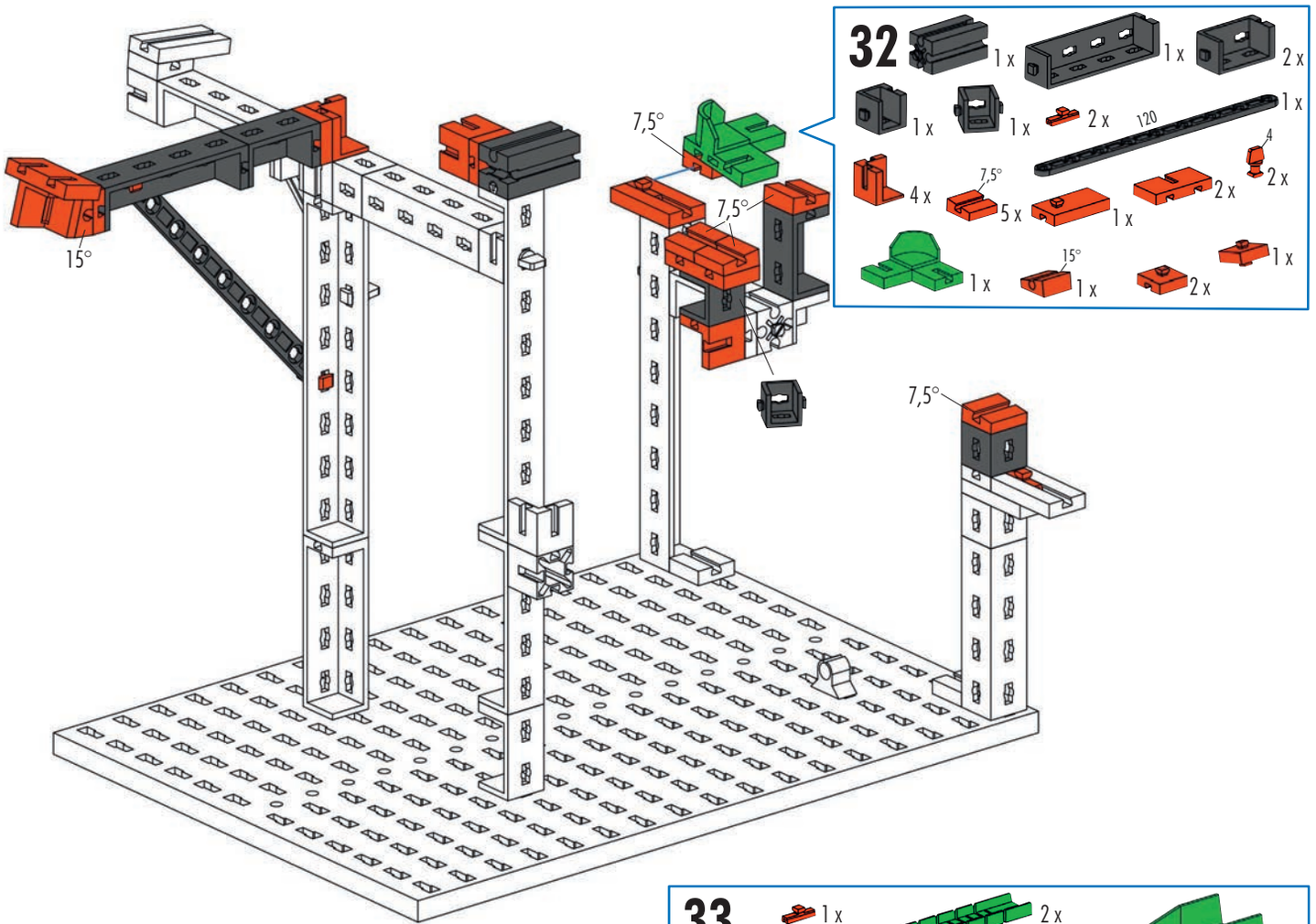
32
1 x
1 x
2 x
1 x
1 x
1 x
2 x
120
1 x
4
2 x
4 x
7,5°
5 x
1 x
2 x
1 x
15°
1 x
2 x
1 x
7,5°
7,5°
7,5°
15°

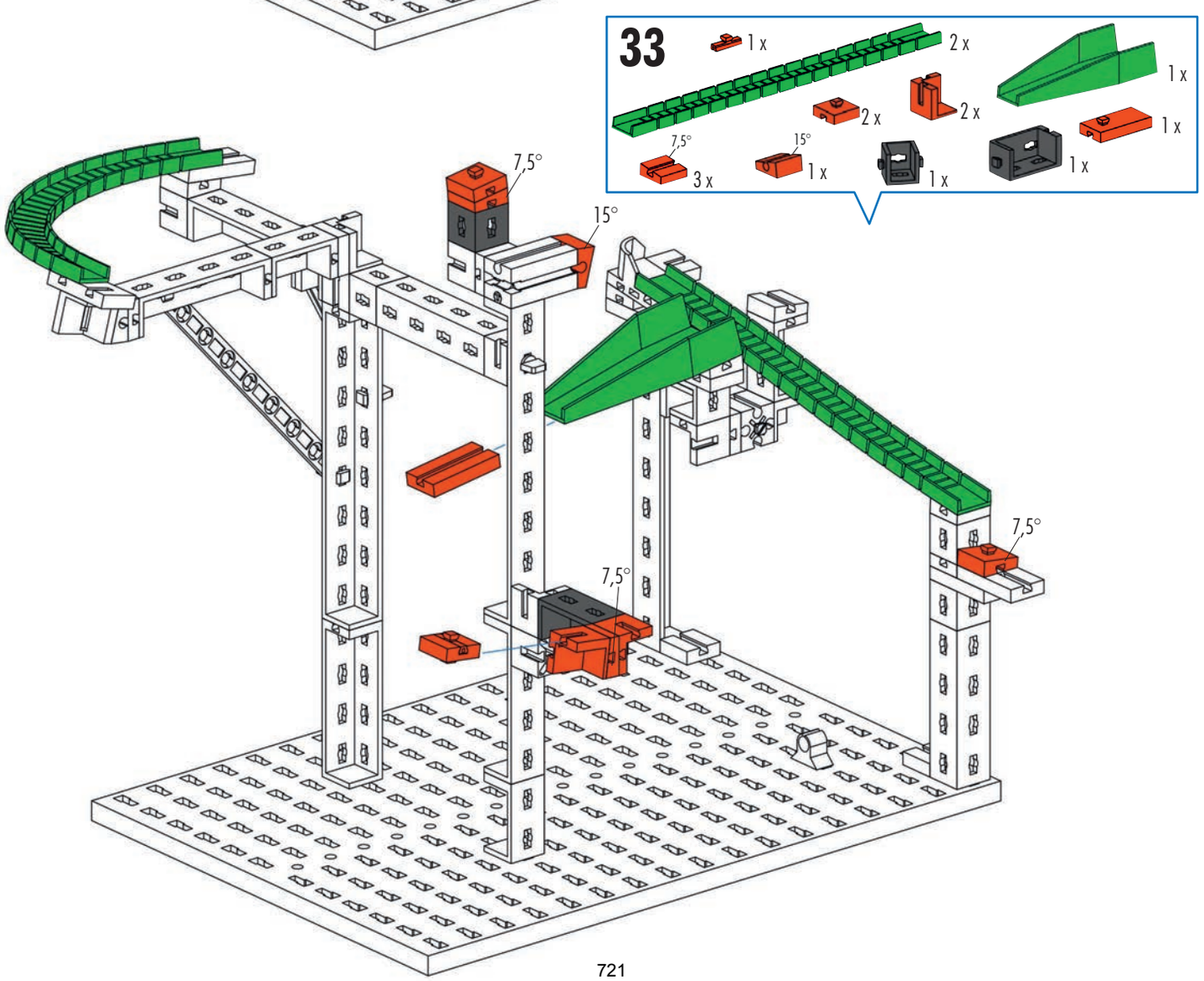
33
1 x
2 x
1 x
2 x
2 x
1 x
7,5°
3 x
15°
1 x
1 x
1 x
7,5°
15°
7,5°
7,5°

721

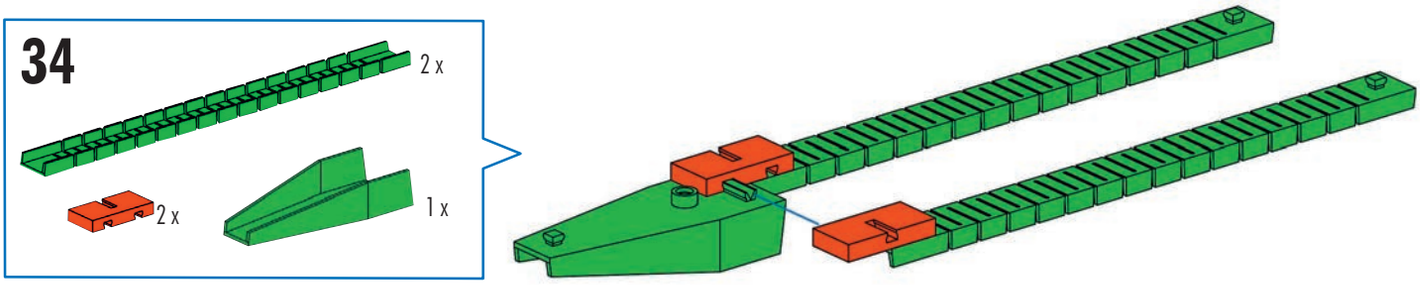
34
2 x
2 x
1 x

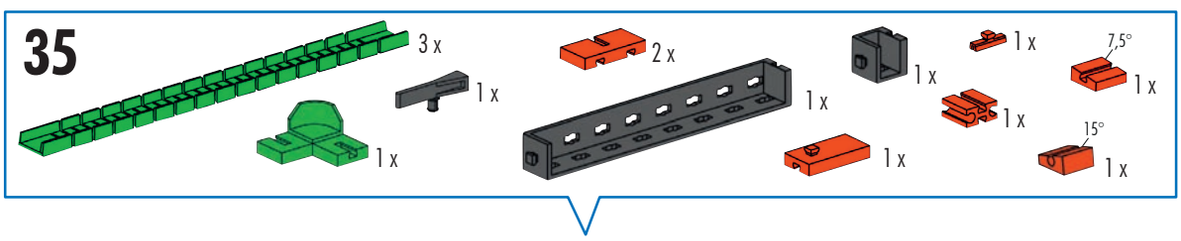
35
3 x
1 x
1 x
2 x
1 x
1 x
1 x
1 x
7,5°
1 x
1 x
15°
1 x

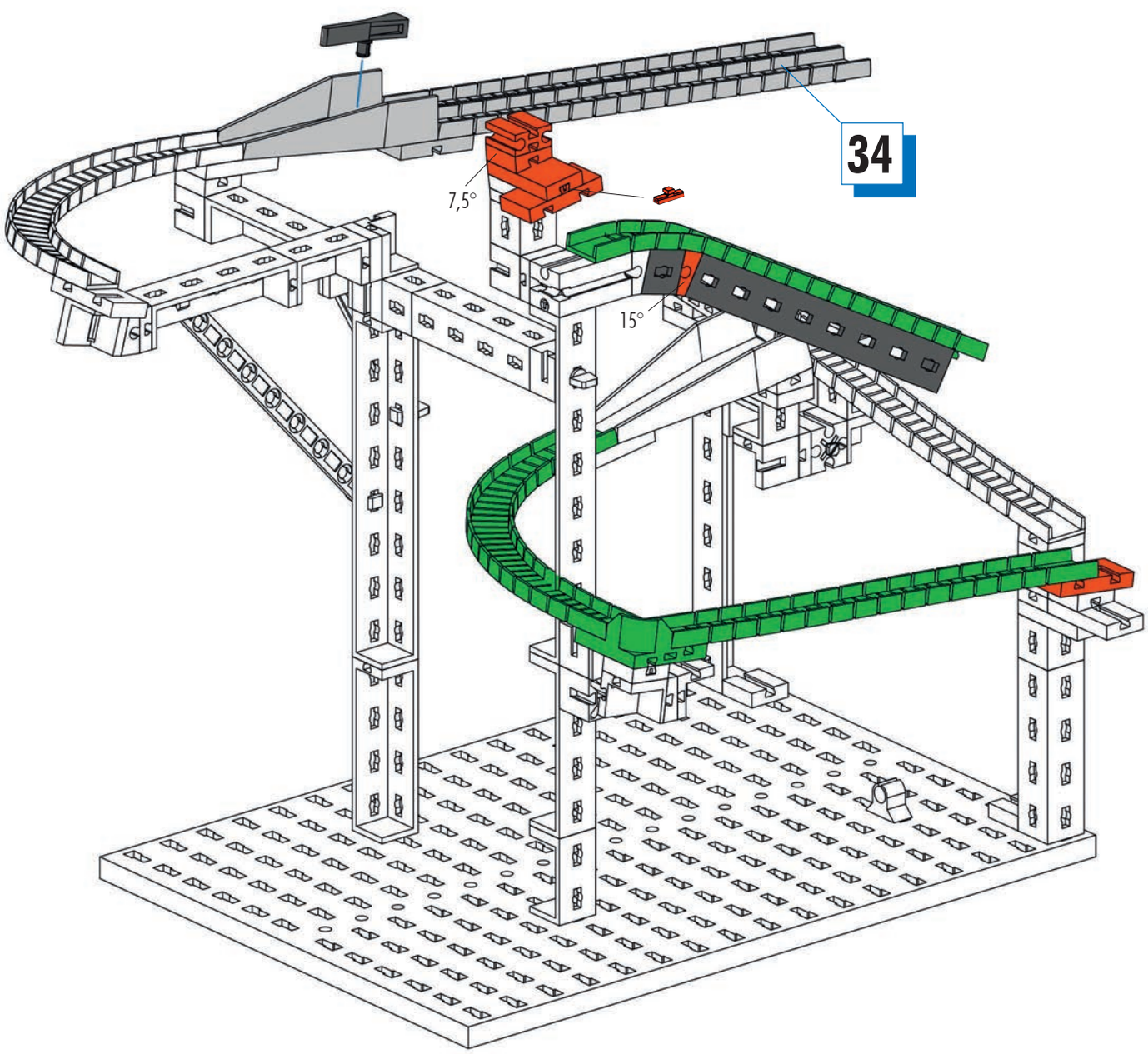
34
7,5°
15°

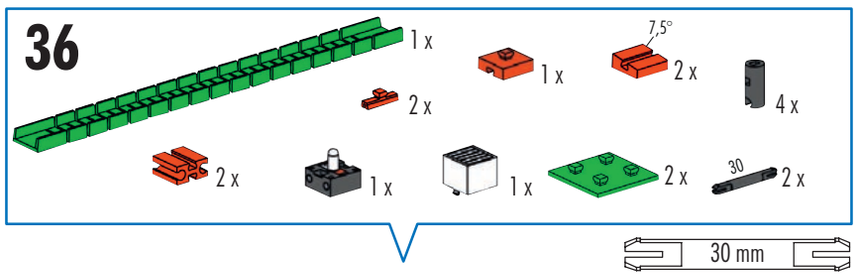
36
1 x
2 x
1 x
7,5°
2 x
4 x
2 x
1 x
1 x
2 x
30
2 x
30 mm

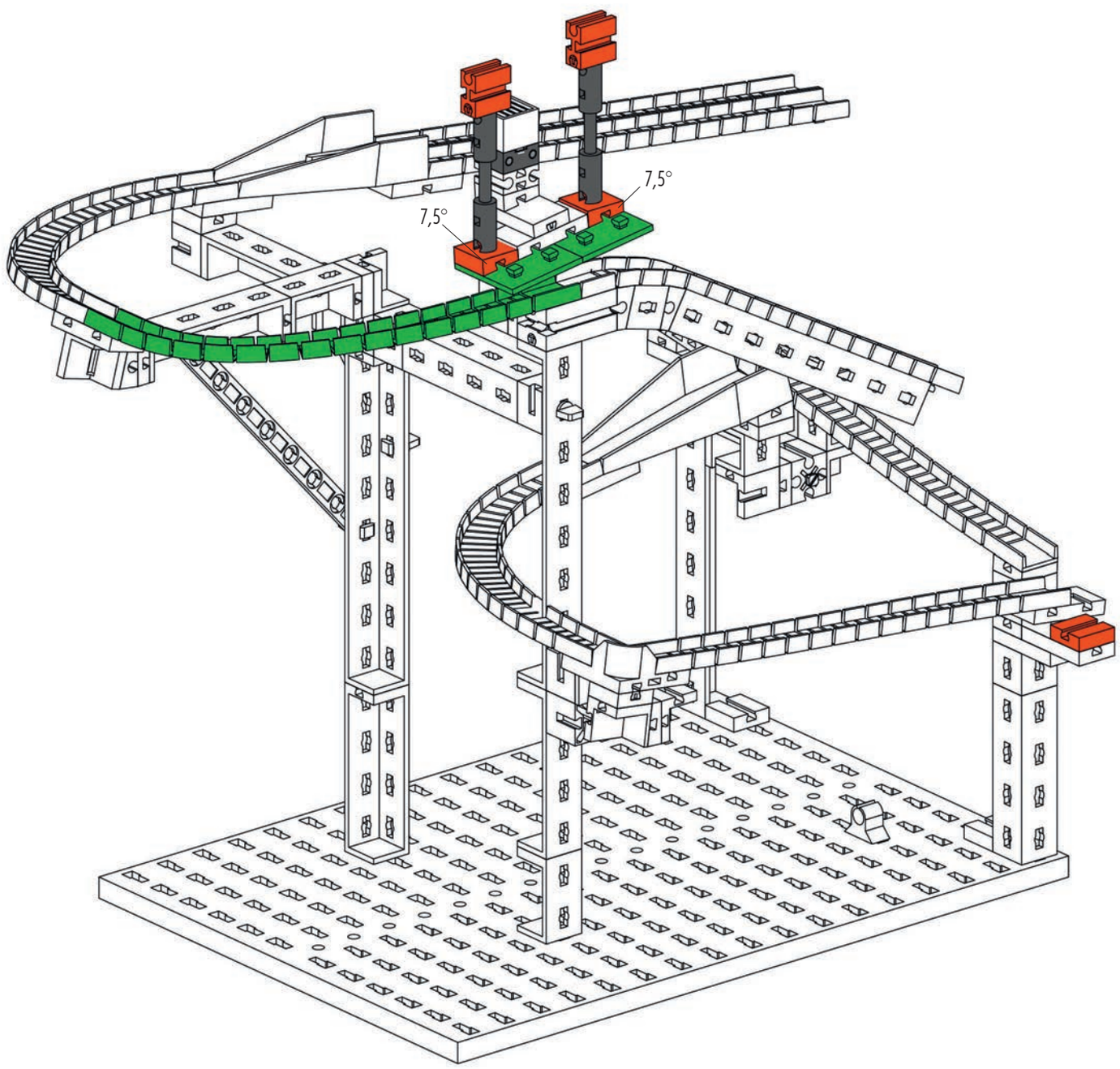
7,5°
7,5°

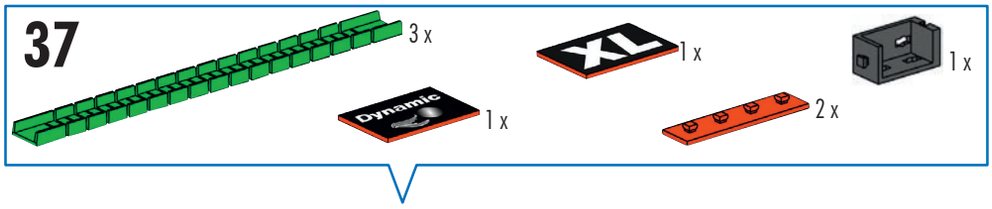
37
3 x
XL
1 x
1 x
Dynamic
1 x
2 x

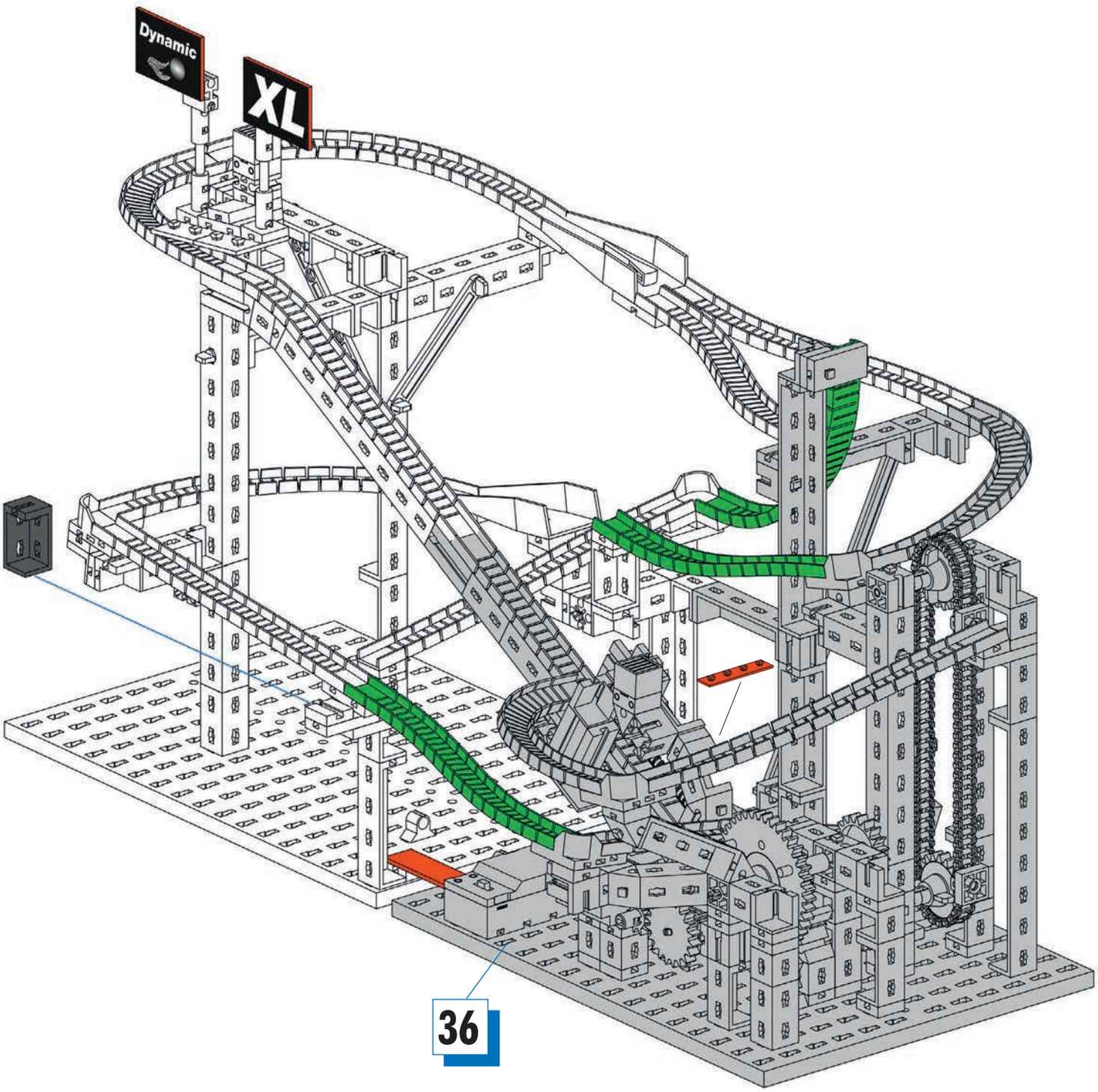
Dynamic
XL
36

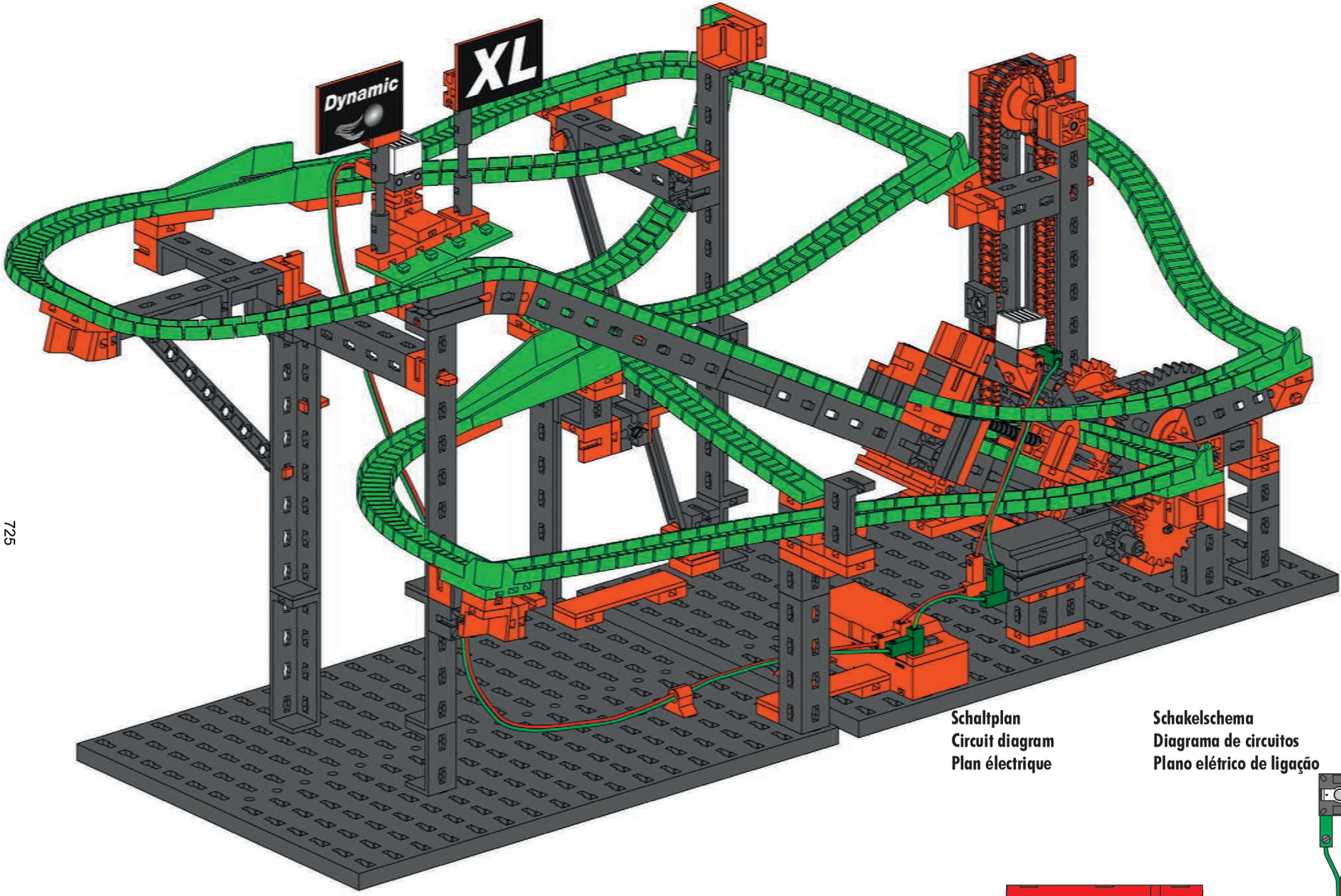

Schaltplan
Circuit diagram
Plan électrique

Schakelschema
Diagrama de circuitos
Plano elétrico de ligação

Schema elettrico
Схема подключения
电路图

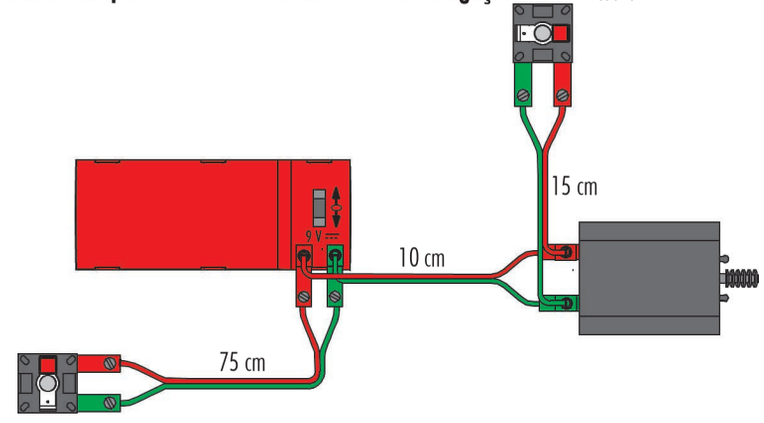

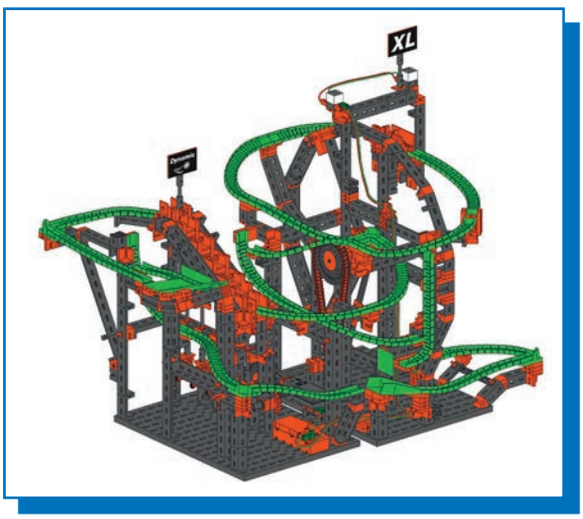

Rad- und Treppenförderer
Wheel and stair step conveyor
Transporteur à roue monte-escalier

Wiel- en trapsgewijze transporteur
Transportador de ruedas y de escalera
Transportadora de roda e de corrente

Convogliatore a ruota e a scala
Роторный и лестничный транспортёр
斗轮式和阶梯式输送机混合搭配

1-20

Treppenförderer
Stair step conveyor
Monte-escalier

Trapsgewijze transporteur
Transportador de escalera
Transportadora de escada

Convogliatore a scala
Лестничный транспортёр
阶梯式输送机

Seite	33
Page	33
Page	33
Bladzijde	33
Página	33
Pagina	33
Pagina	33
Страница	33
页次	33

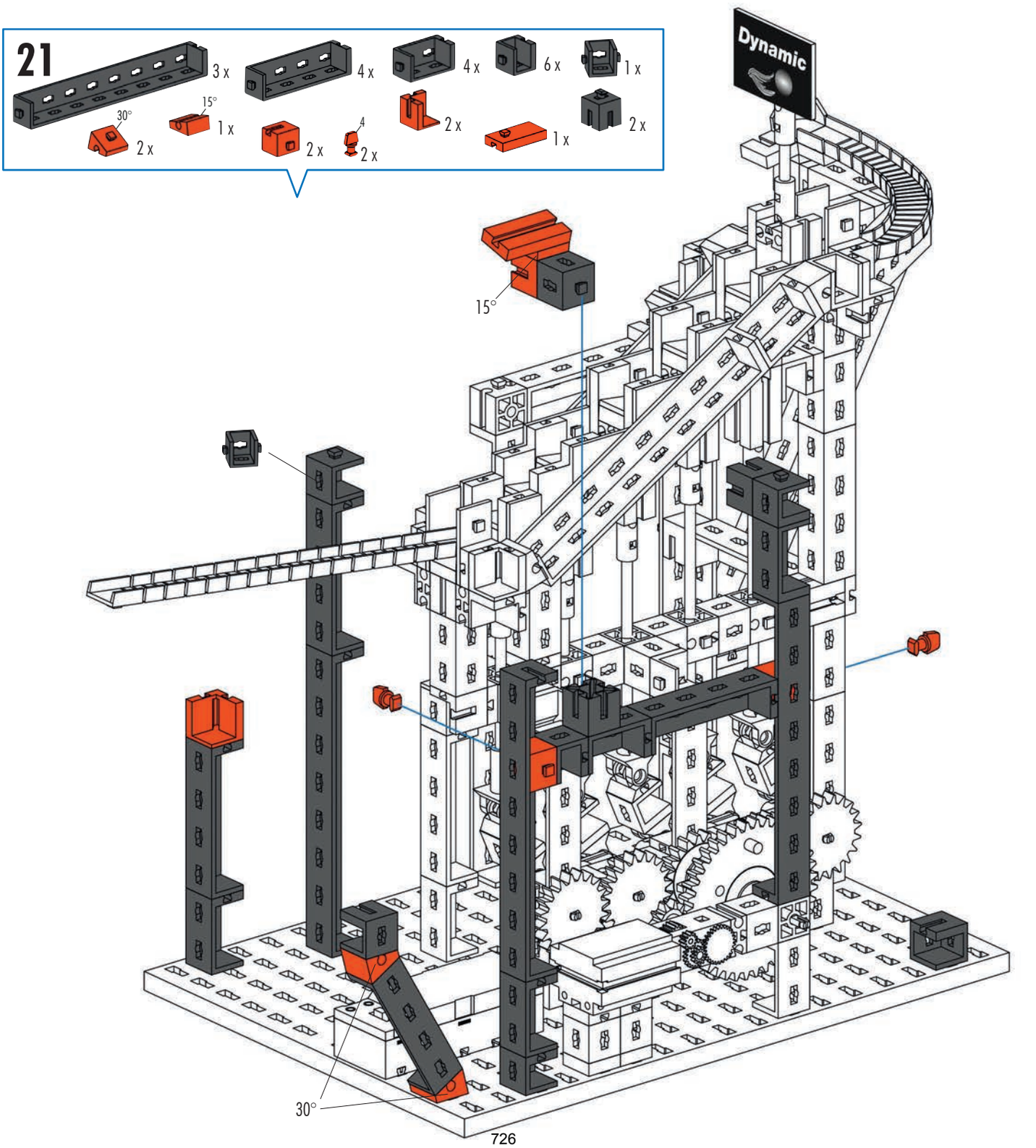

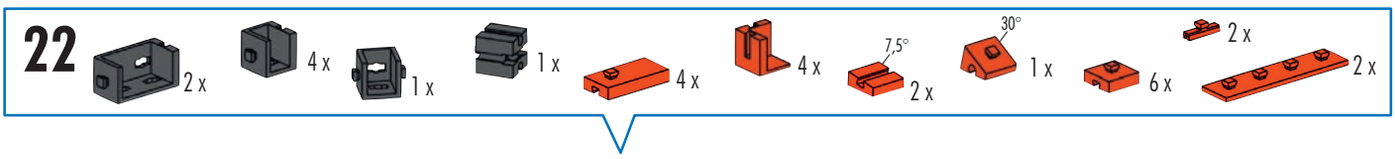
22
2 x
4 x
1 x
1 x
4 x
4 x
7,5°
2 x
30°
1 x
6 x
2 x
2 x

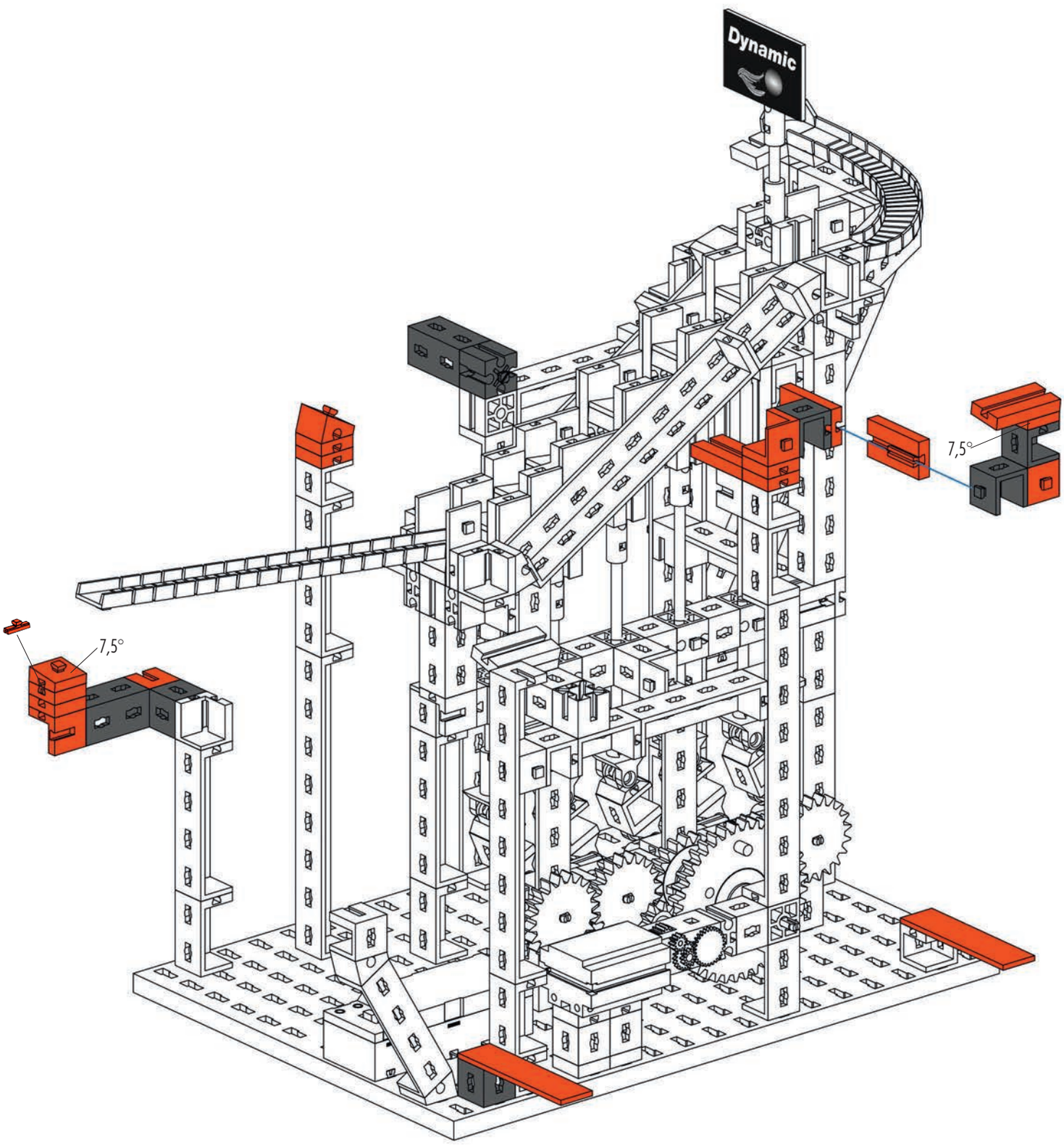
Dynamic
7,5°
7,5°

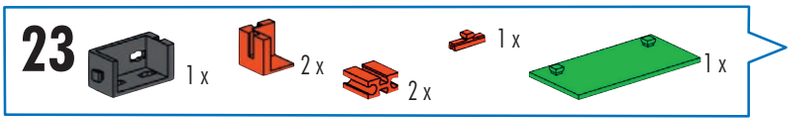
23
1 x
2 x
2 x
1 x
1 x

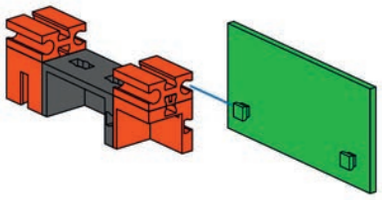

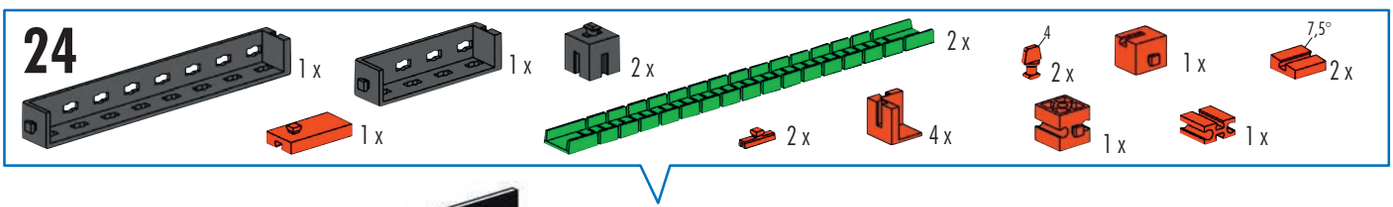
24
1 x
1 x
1 x
2 x
2 x
4 x
4
2 x
1 x
7,5°
2 x
1 x
1 x

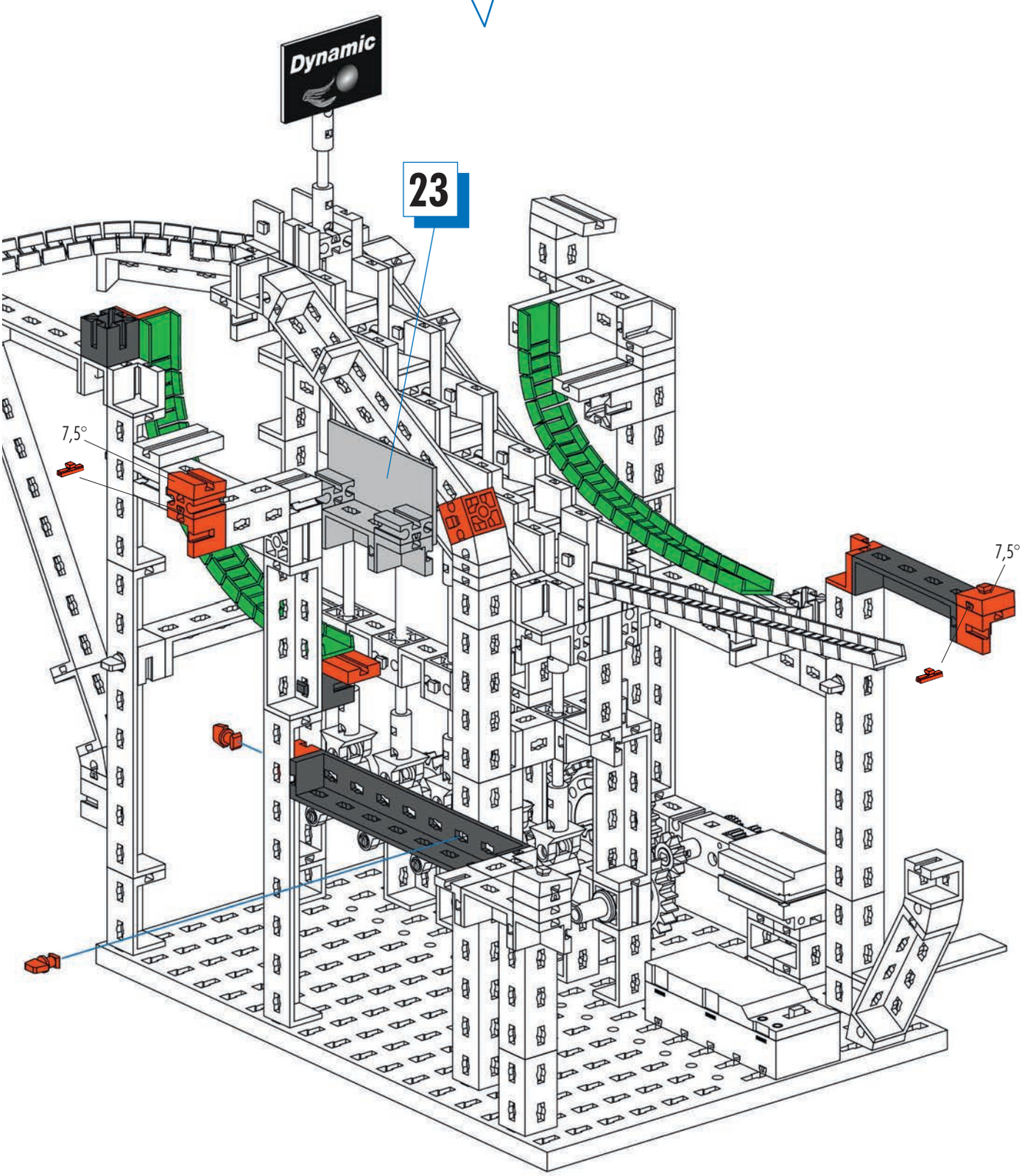
Dynamic
23
7,5°
7,5°

728

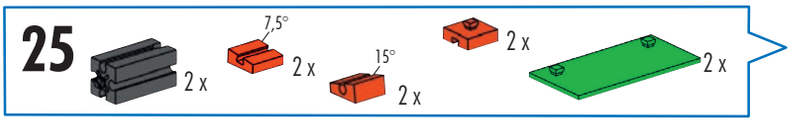
25
2 x
7,5°
2 x
15°
2 x
2 x
2 x

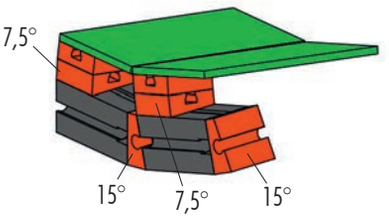
7,5°
15°
7,5°
15°

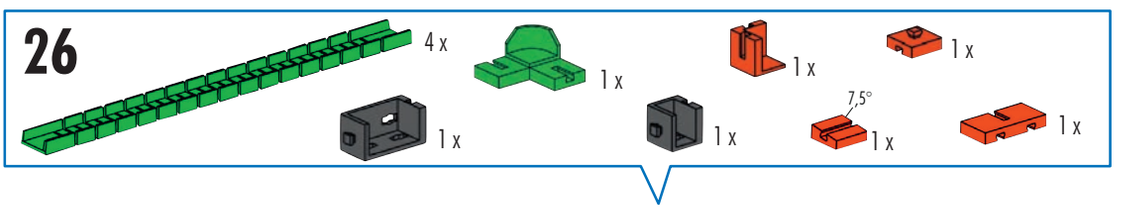
26
4 x
1 x
1 x
1 x
1 x
7,5°
1 x
1 x

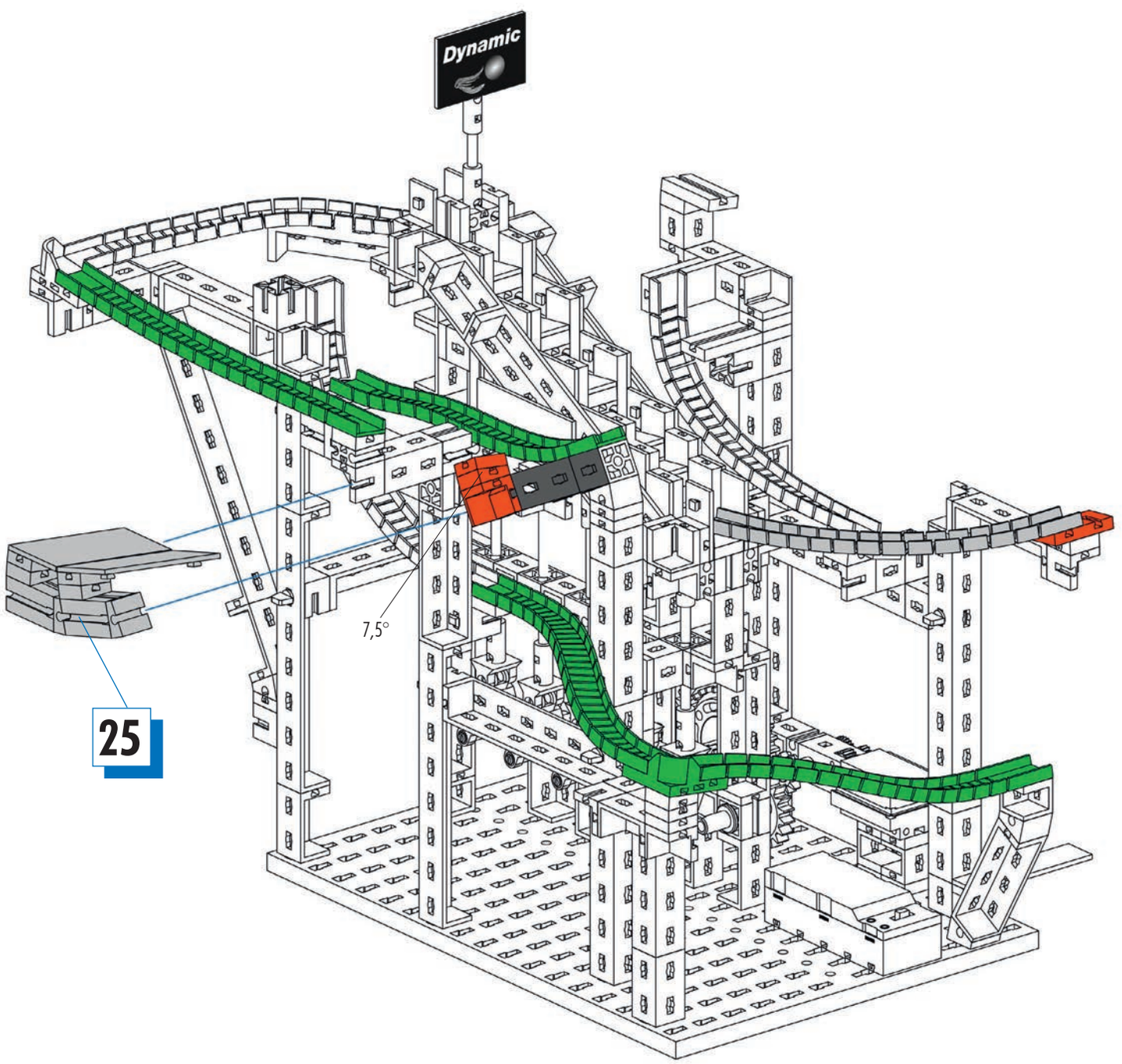
Dynamic
7,5°
25

1-24

Radförderer
Wheel conveyor
Transporteur à roue

Wieltransporteur
Transportador de ruedas
Transportadora de roda

Convogliatore a ruota
Роторный транспортёр
斗轮输送机

Seite	15
Page	15
Page	15
Bladzijde	15
Página	15
Pagina	15
Pagina	15
Страница	15
页次	15

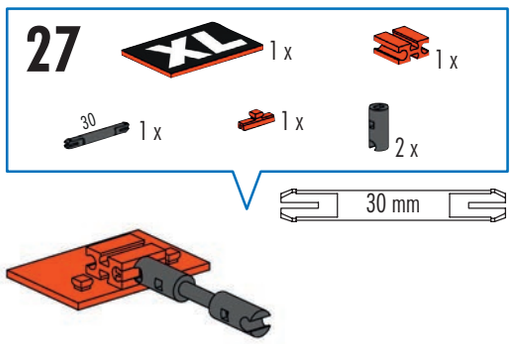

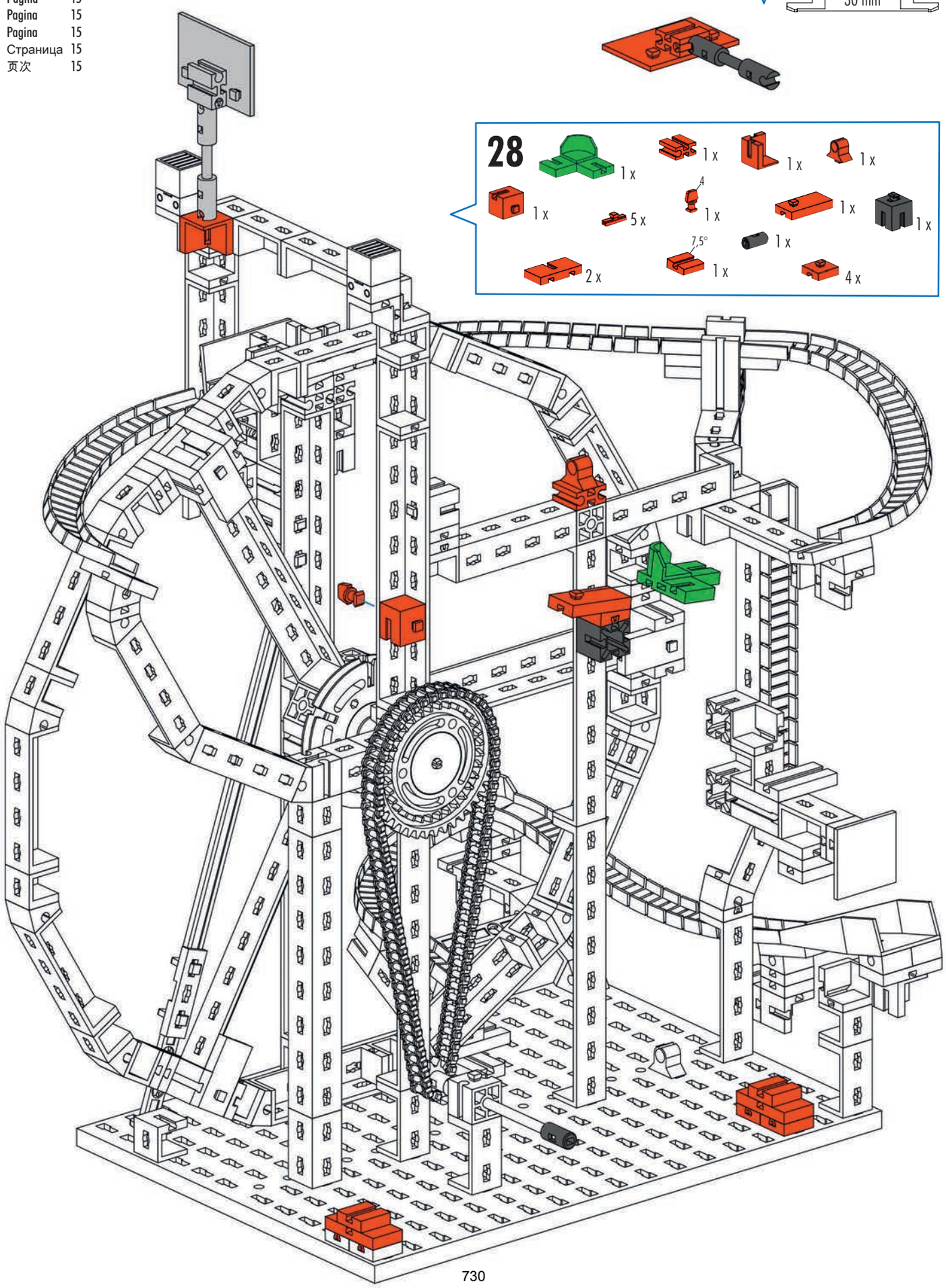

730

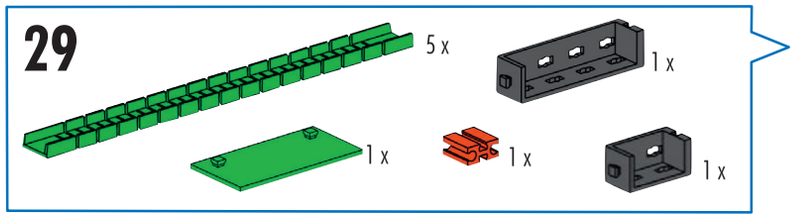
29
5 x
1 x
1 x
1 x
1 x

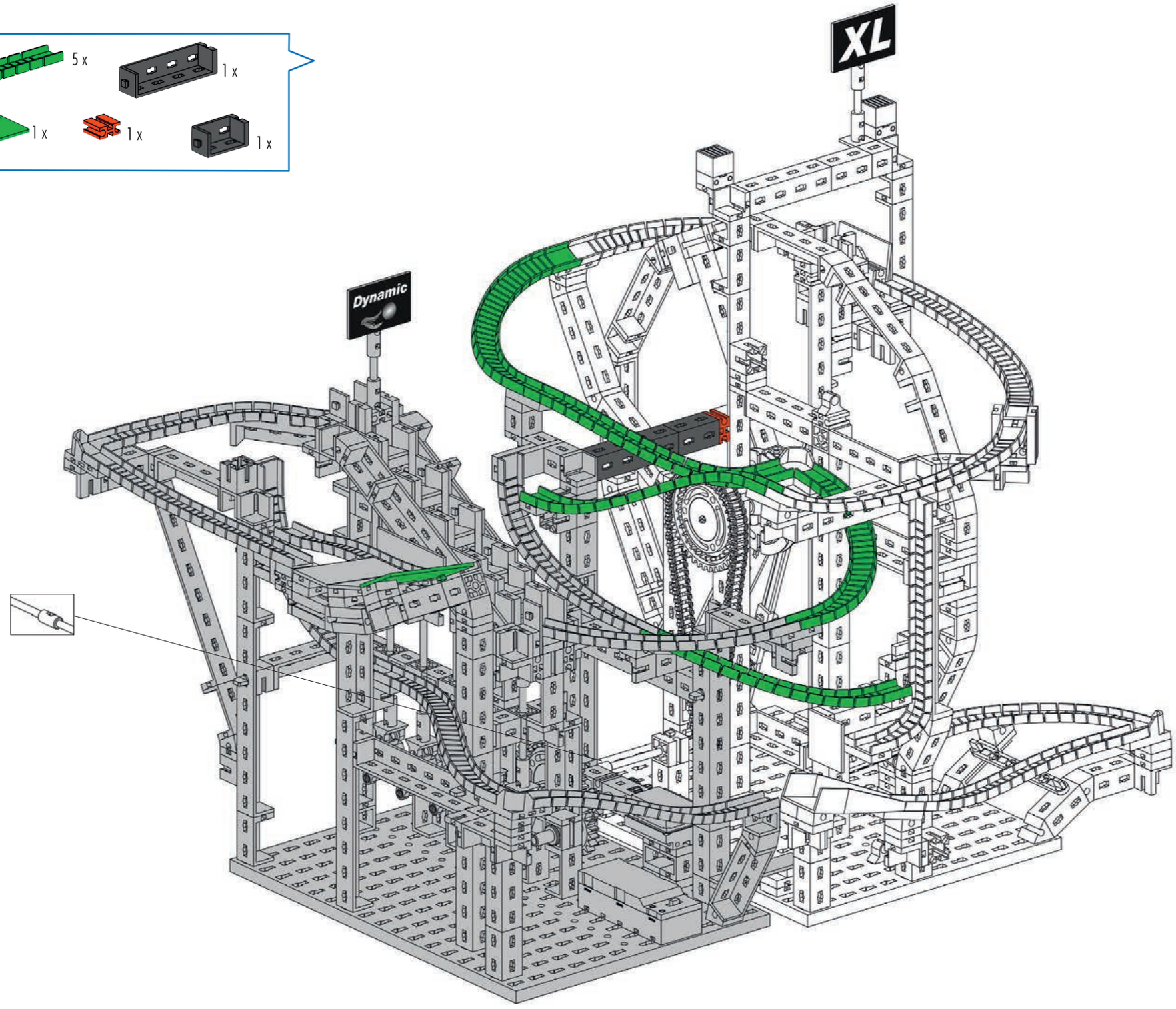
XL
Dynamic

Schaltplan
Circuit diagram
Plan électrique

Schakelschema
Diagrama de circuitos
Plano elétrico de ligação

Schema elettrico
Схема подключения
电路图

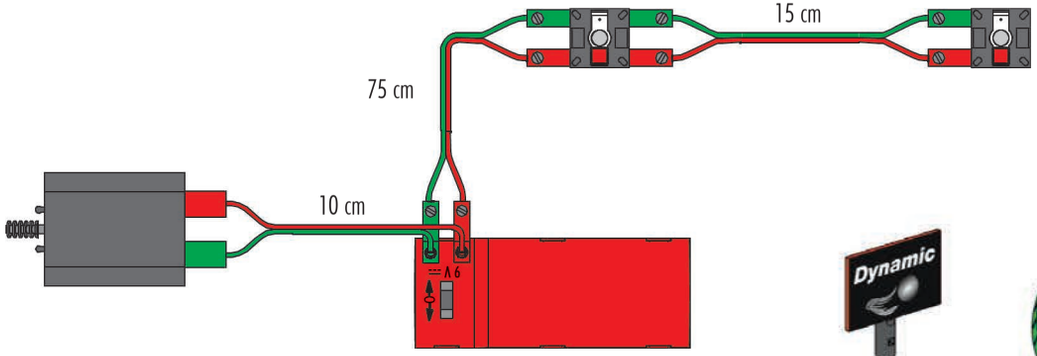

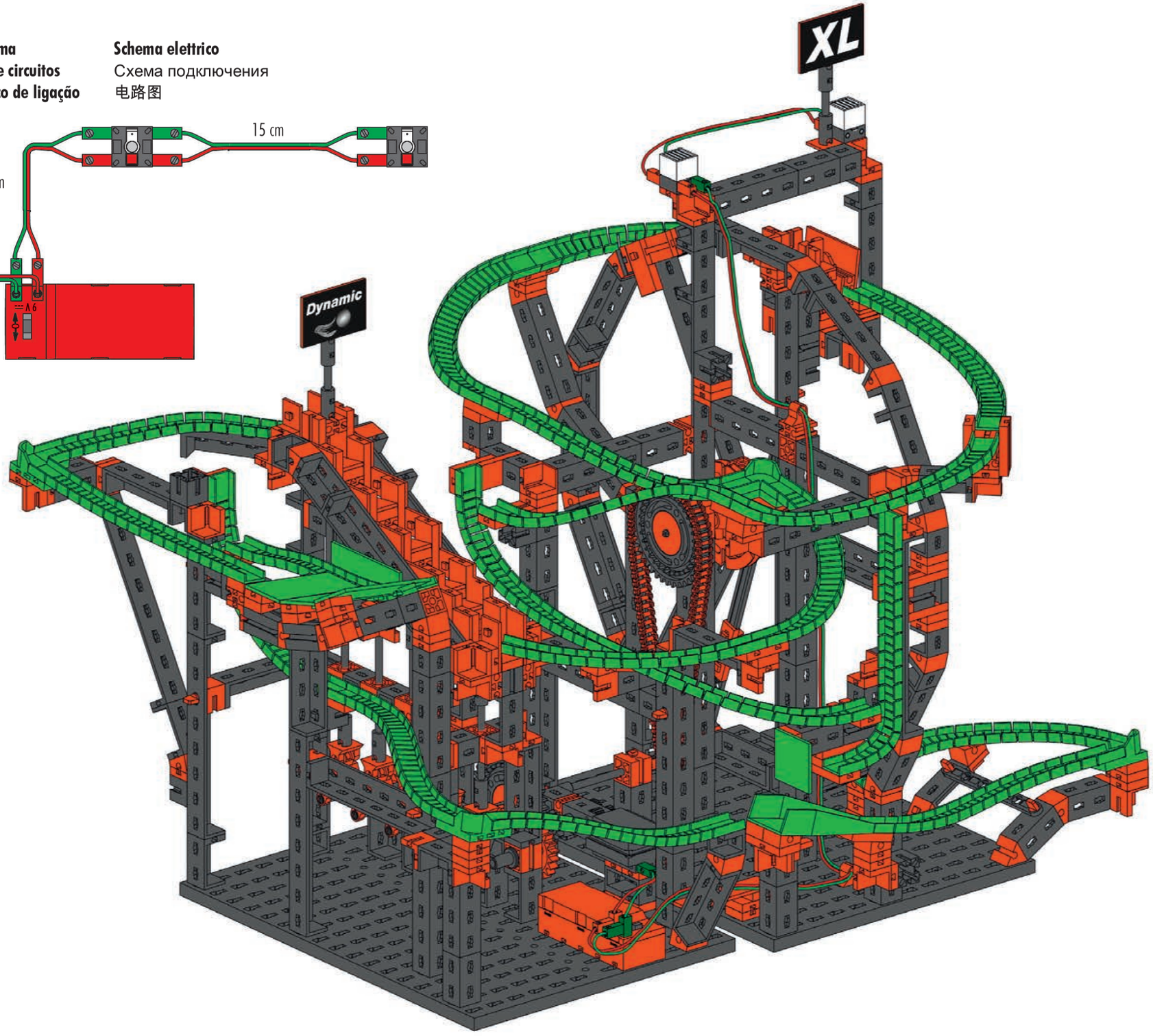

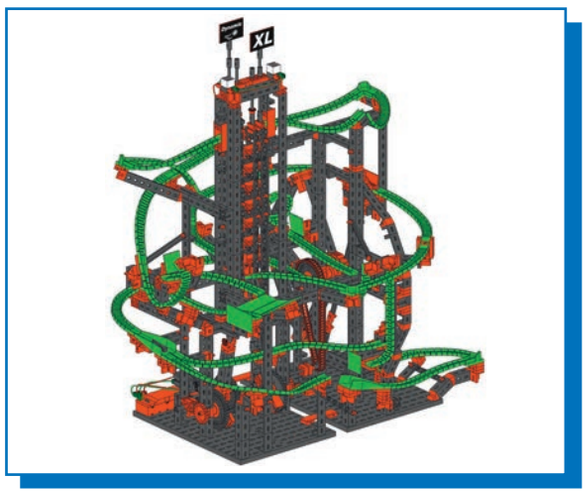

Rad- und Stufenförderer
Wheel and stage conveyor
Transporteur à roue vertical

Wieltransporteur en paternosterlift
Transportador de ruedas y de escalones
Transportadora de roda e de degraus

Convogliatore a ruota e a gradini
Роторный и ступенчатый транспортёр
斗轮式和矿井升降机式输送机混合搭配

1-19

Seite	15
Page	15
Page	15
Bladzijde	15
Página	15
Pagina	15
Pagina	15
Страница	15
页次	15

Radförderer
Wheel conveyor
Transporteur à roue

Wieltransporteur
Transportador de ruedas
Transportadora de roda

Convogliatore a ruota
Роторный транспортёр
斗轮输送机

20

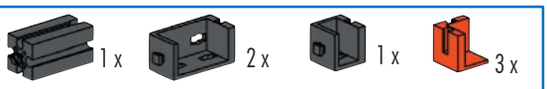

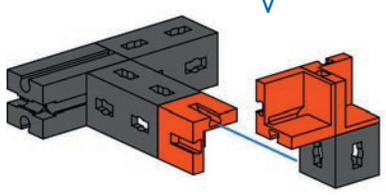

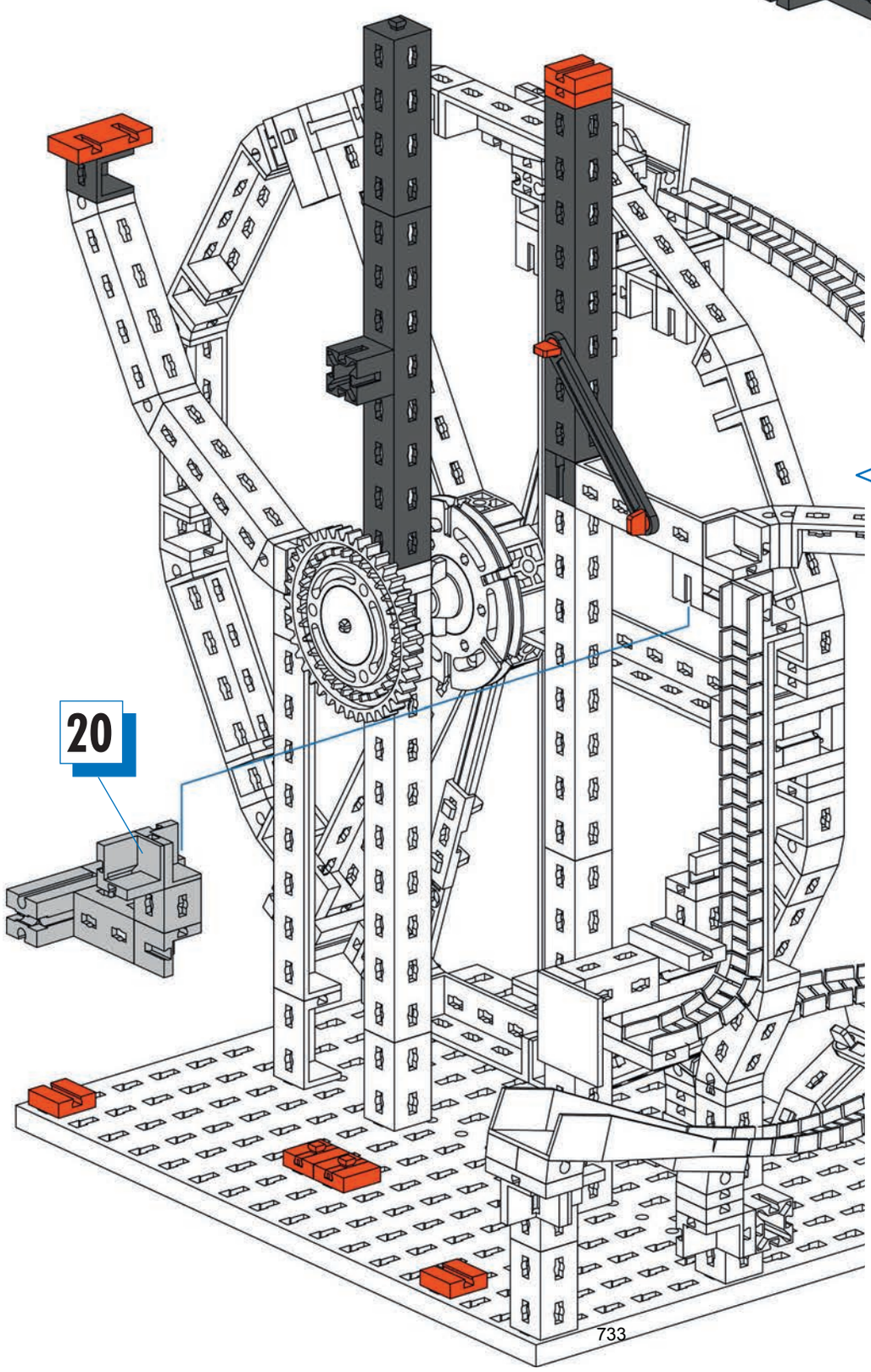

21

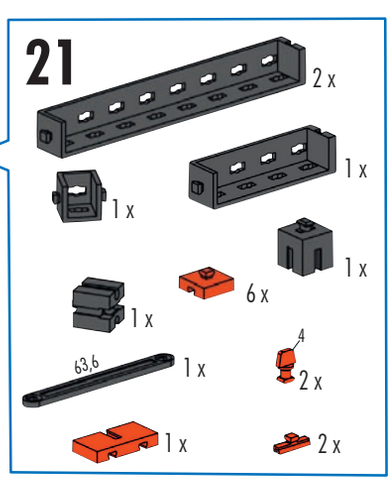

22

1 x

1 x

2 x

2 x

2 x

2 x

1 x

1 x

2 x

4

2 x

60°

1 x

1 x

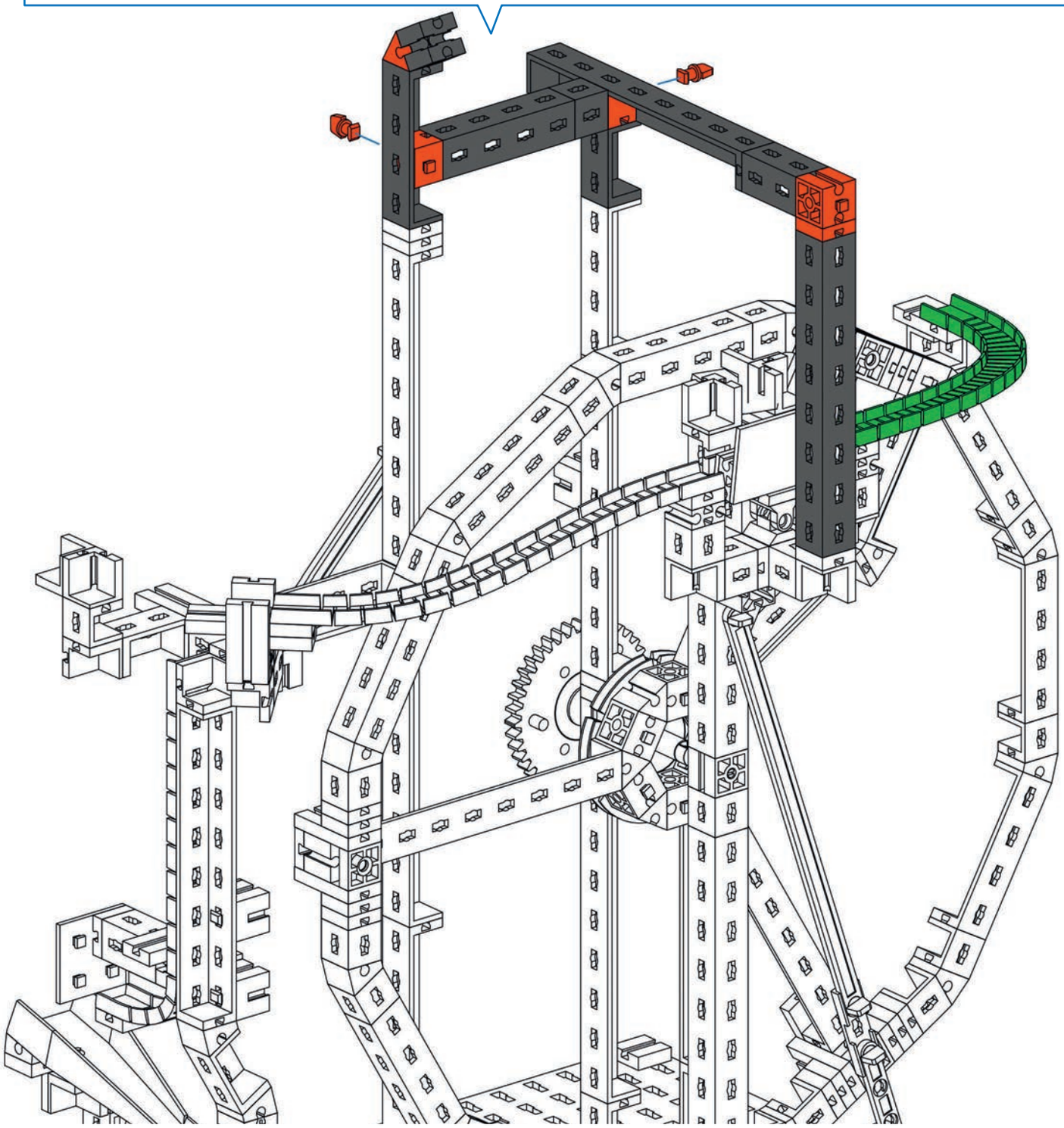

23

1 x

1 x

1 x

1 x

7,5°

2 x

2 x

1 x

1 x

1 x

1 x

1 x

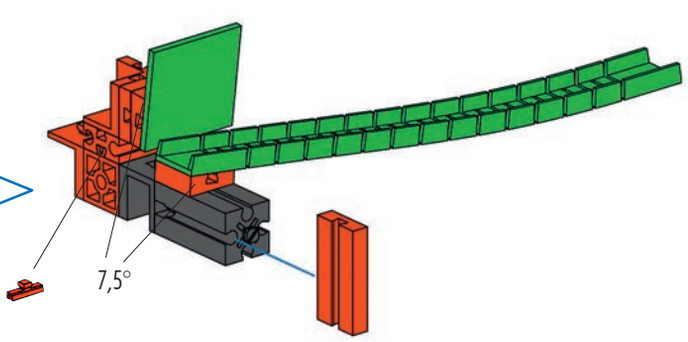

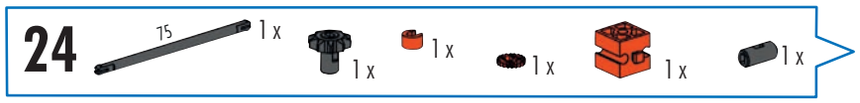
24
75
1 x
1 x
1 x
1 x
1 x
1 x

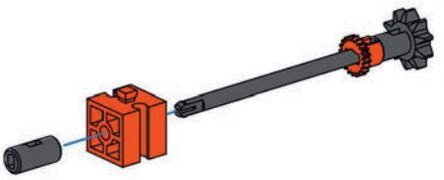

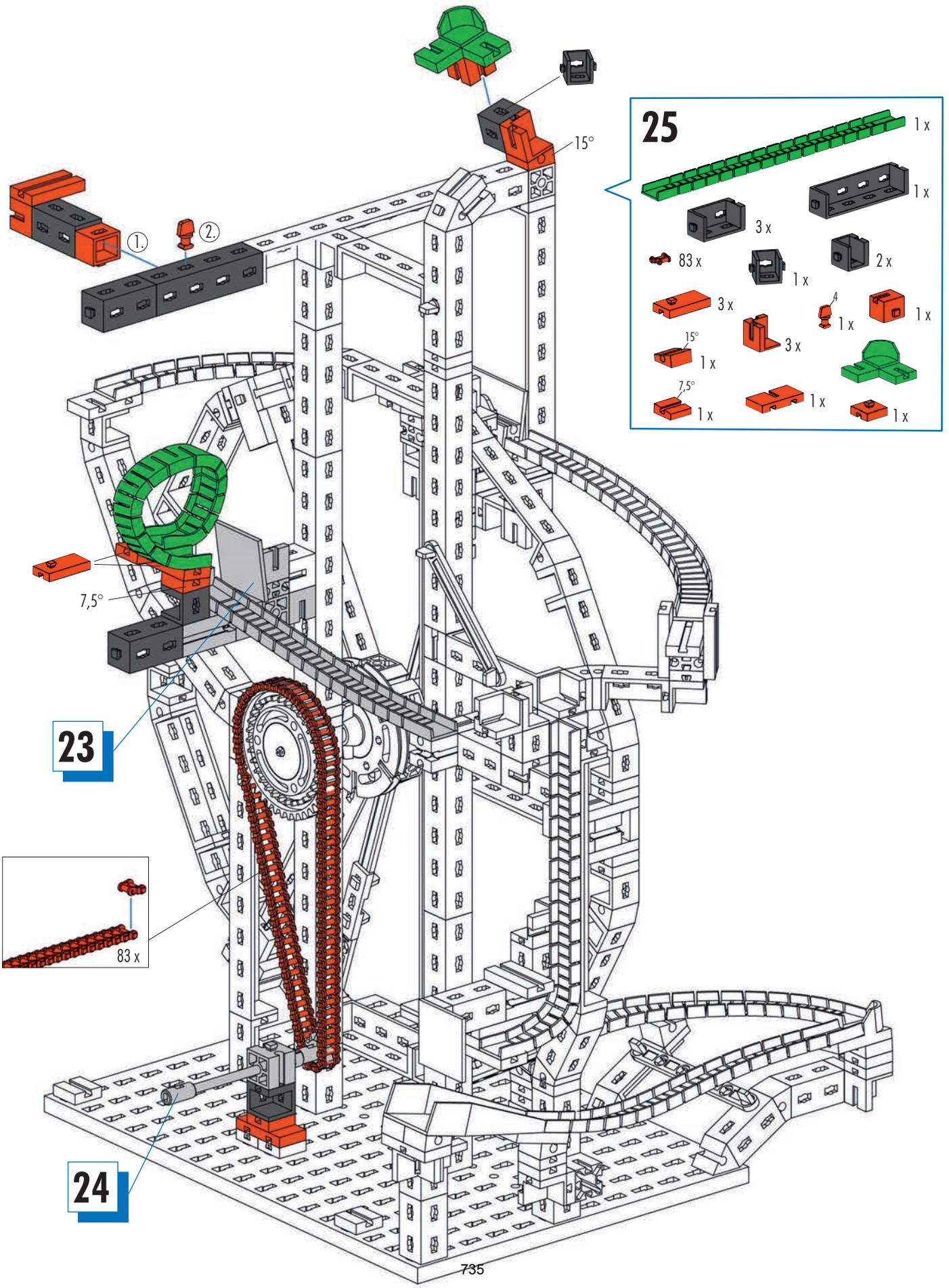
15°
1.
2.
7,5°
23
83 x
24
735

25
1 x
1 x
3 x
83 x
2 x
1 x
3 x
4
1 x
1 x
15°
1 x
3 x
7,5°
1 x
1 x
1 x

1-27

Seite	47
Page	47
Page	47
Bladzijde	47
Página	47
Pagina	47
Pagina	47
Страница	47
页次	47

Stufenförderer
Stage conveyor
Transporteur vertical

Paternosterlift
Transportador de escalones
Transportadora de degraus

Convogliatore a gradini
Ступенчатый транспортёр
矿井升降机式输送机

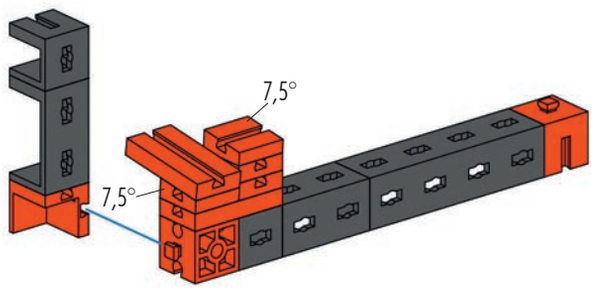

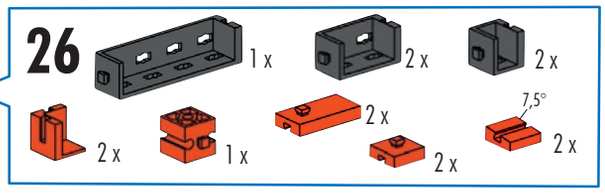

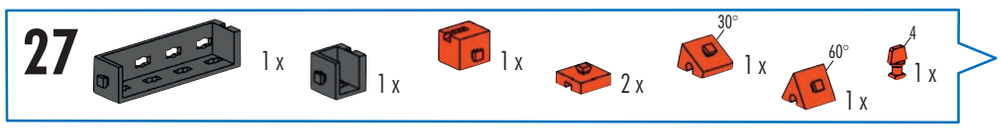

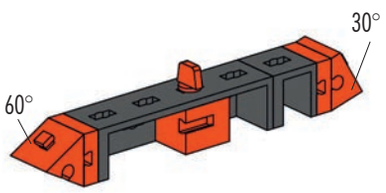

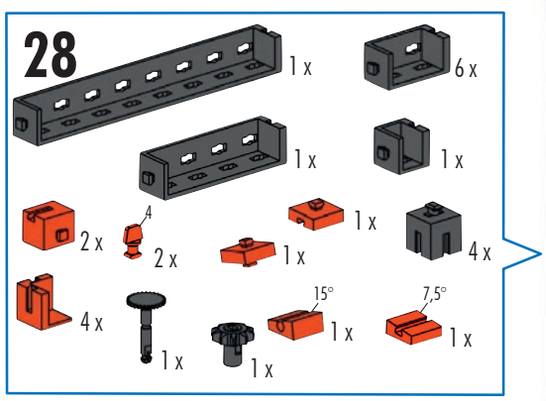

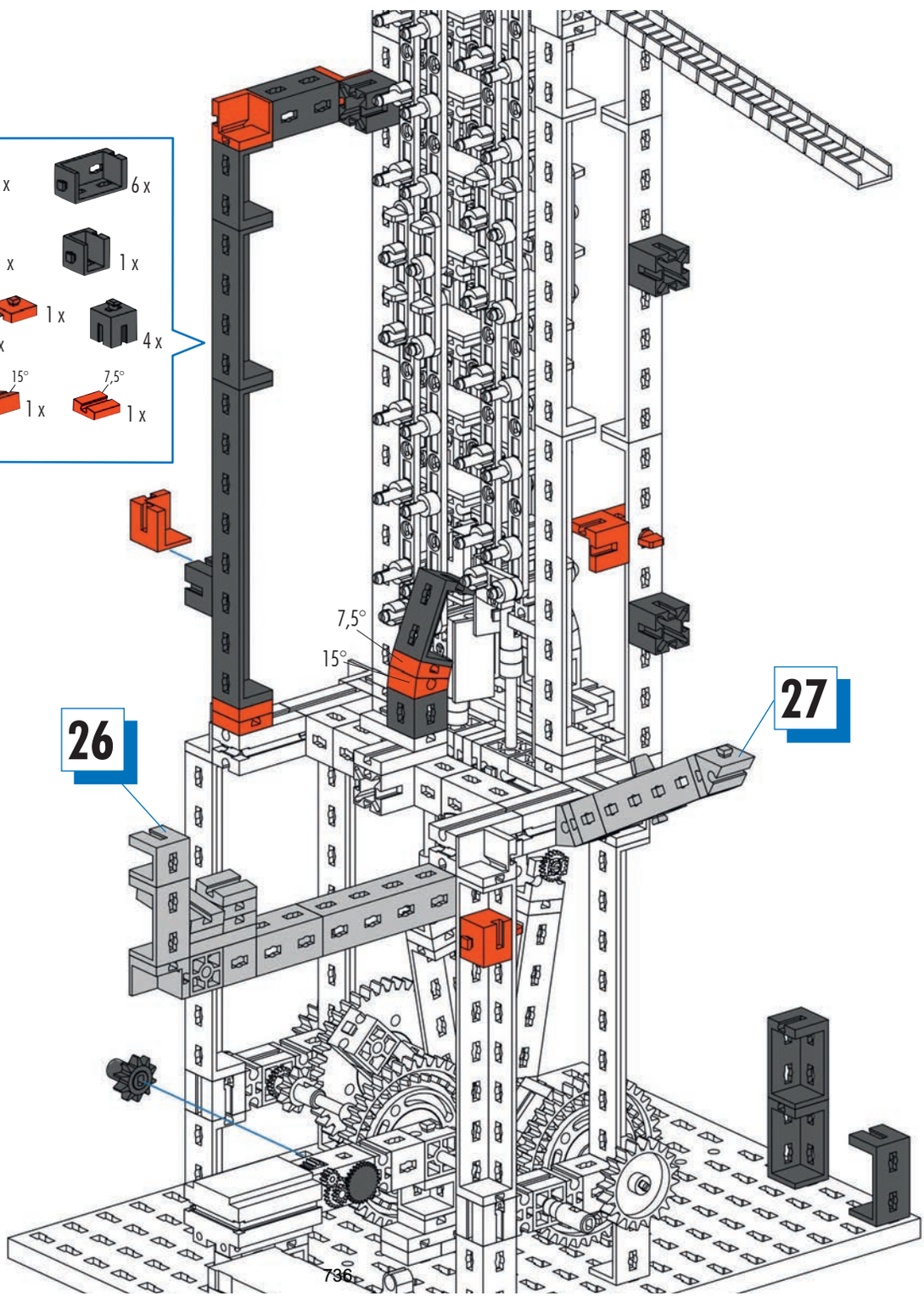

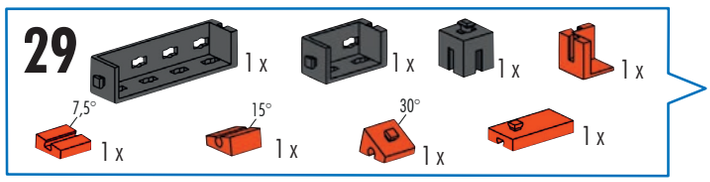
29
1 x
1 x
1 x
1 x
7,5°
1 x
15°
1 x
30°
1 x
1 x

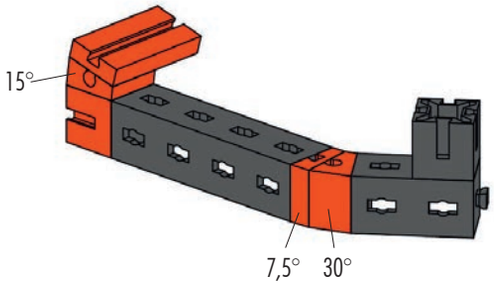
15°
7,5°
30°

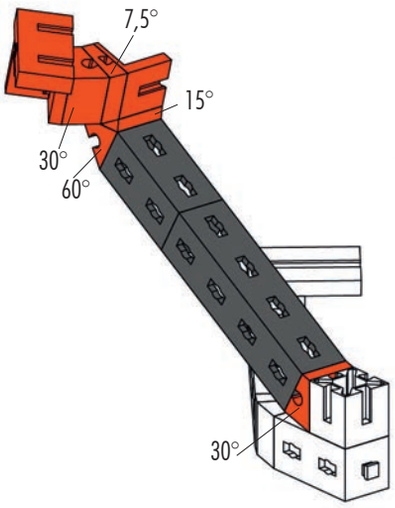
7,5°
15°
30°
60°
30°

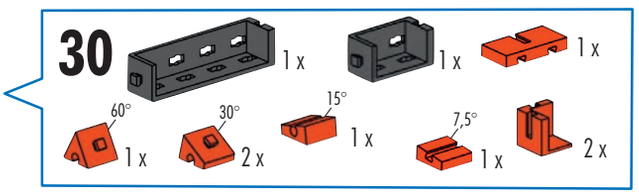
30
1 x
1 x
1 x
60°
1 x
30°
2 x
15°
1 x
7,5°
1 x
2 x

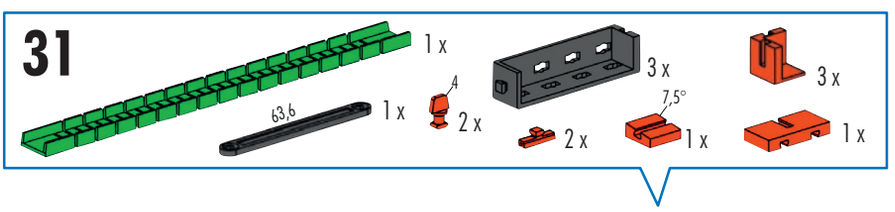
31
1 x
63,6
1 x
4
2 x
3 x
2 x
7,5°
1 x
3 x
1 x

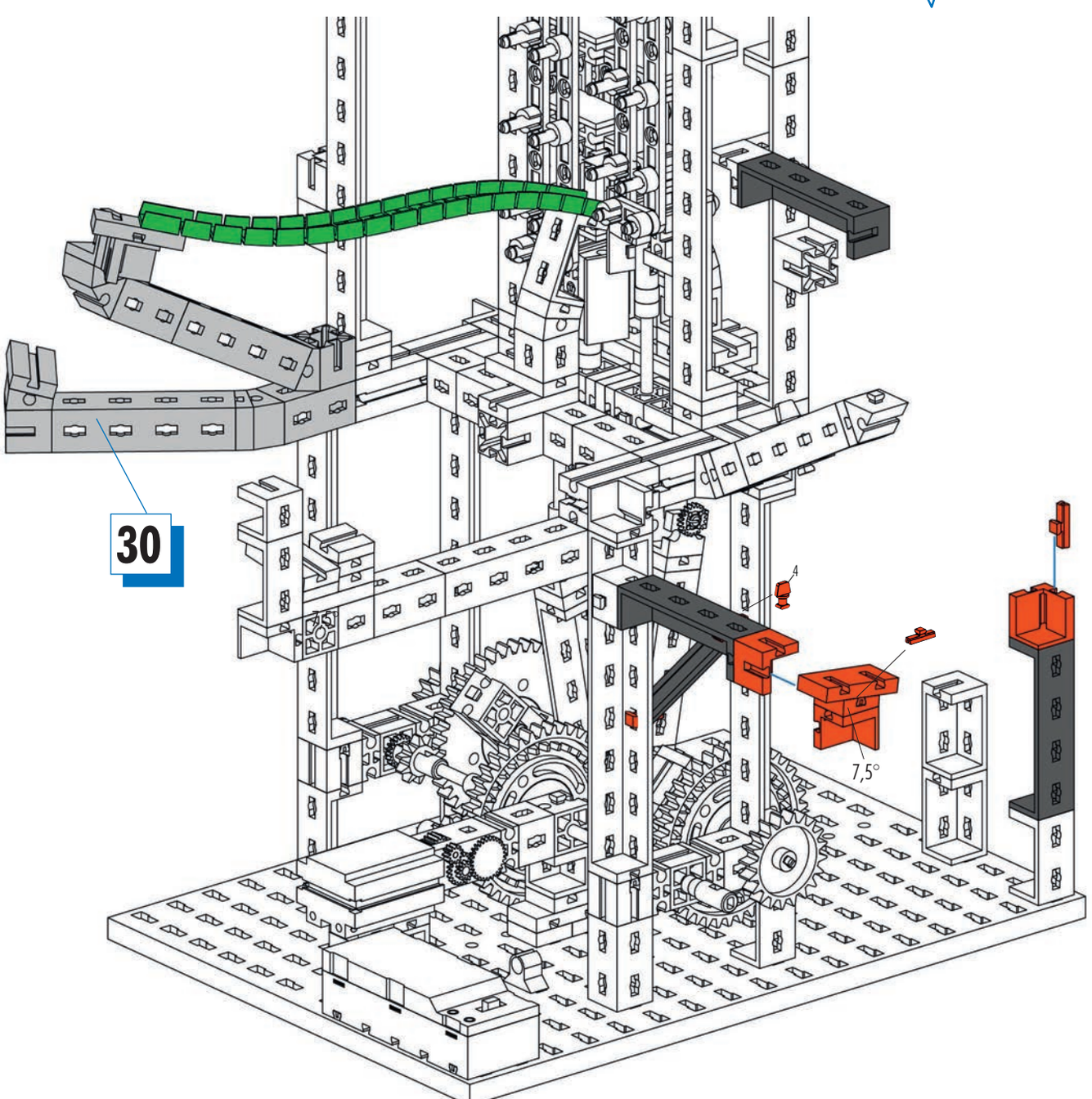
30
4
7,5°

737

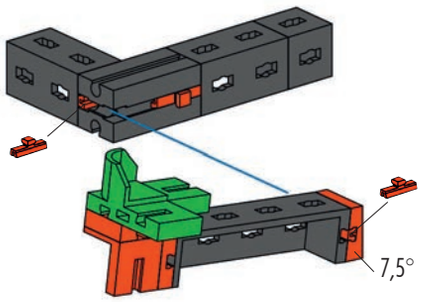
7,5°

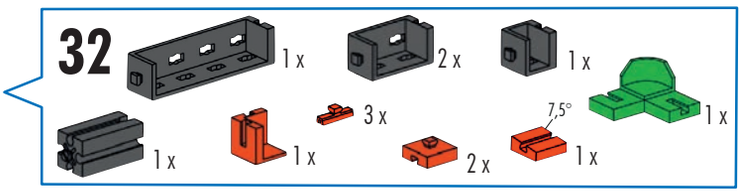
32
1 x
2 x
1 x
1 x
3 x
7,5°
1 x
1 x
1 x
2 x
1 x

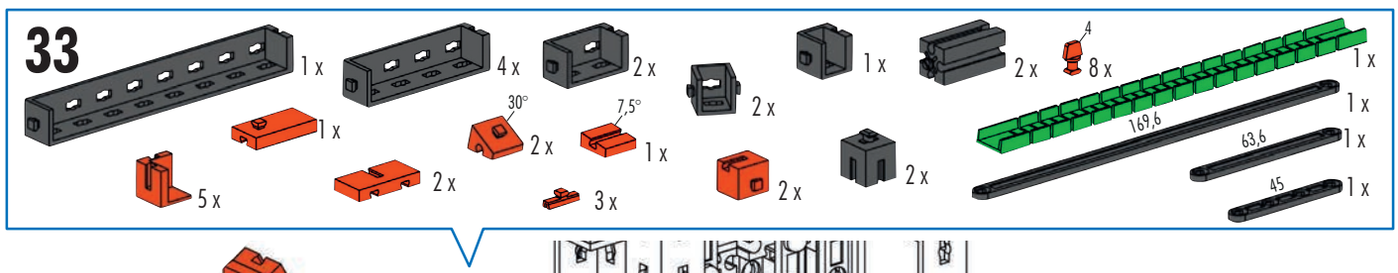
33
1 x
4 x
2 x
1 x
2 x
30°
7,5°
2 x
1 x
5 x
2 x
3 x
2 x
2 x
2 x
4
8 x
1 x
169,6
1 x
63,6
1 x
45
1 x

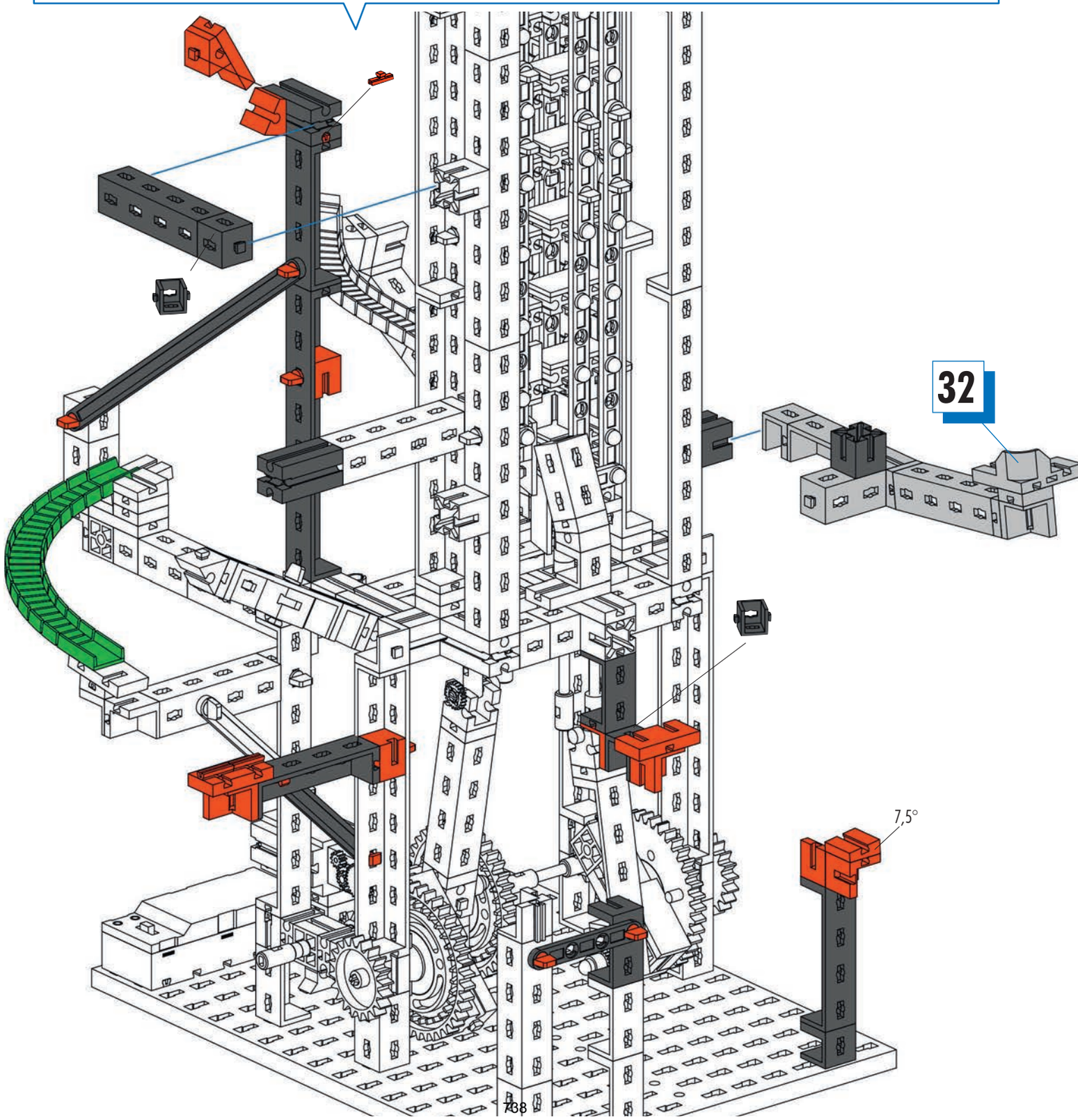
32
7,5°

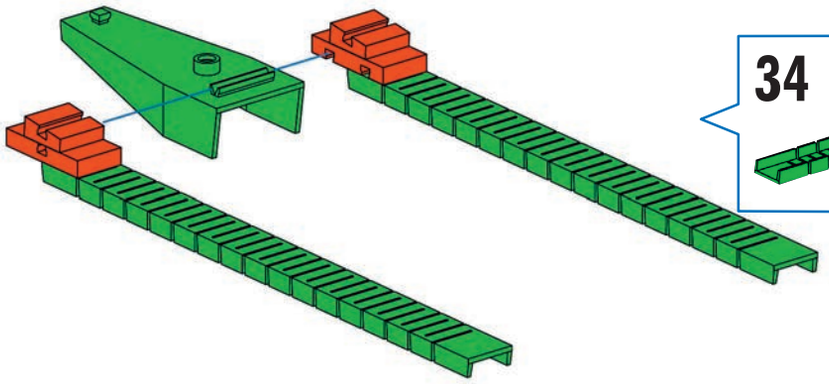

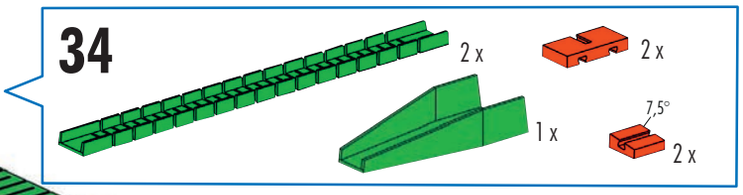
34
2 x
2 x
1 x
7,5°
2 x

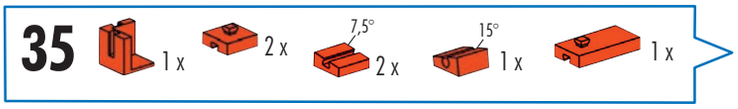
35
1 x
2 x
7,5°
2 x
15°
1 x
1 x

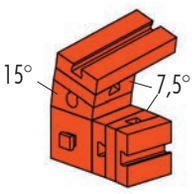
15°
7,5°

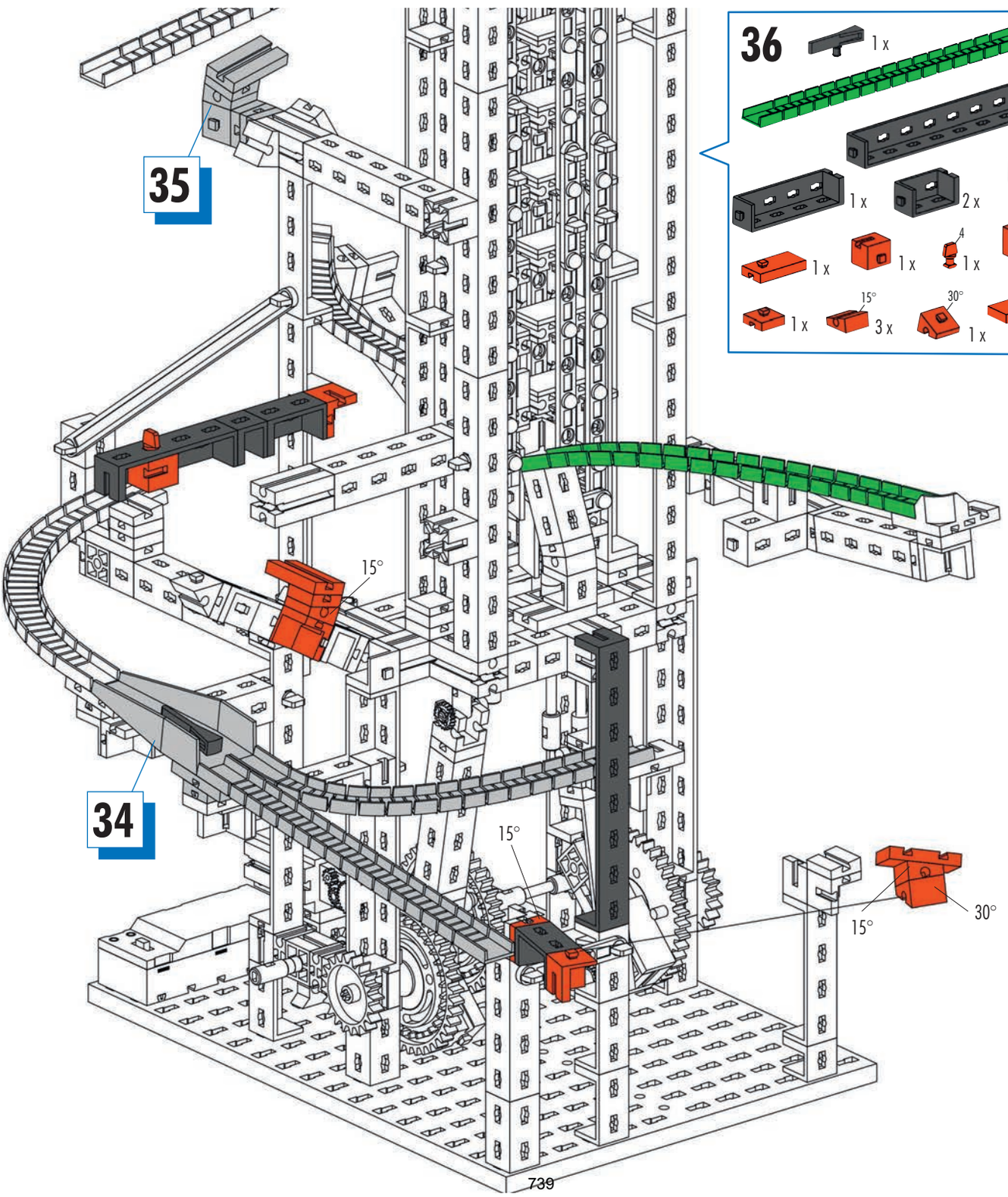
35
34
15°
15°
15°
30°

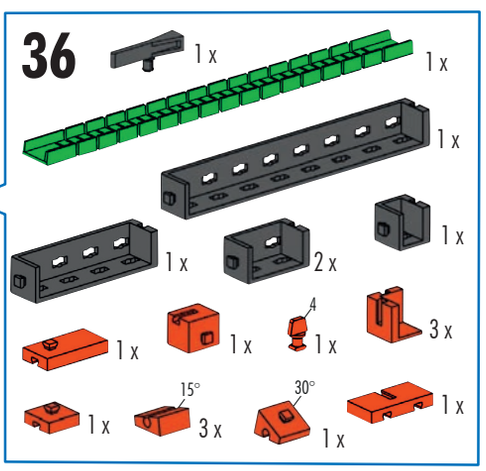
36
1 x
1 x
1 x
1 x
2 x
1 x
1 x
1 x
1 x
3 x
1 x
15°
3 x
30°
1 x
1 x

739

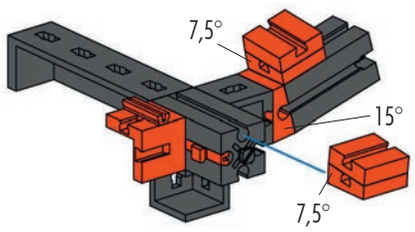
7,5°
15°
7,5°

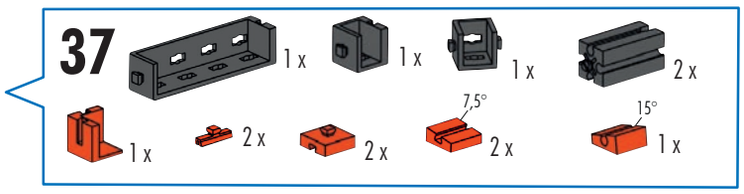
37
1 x
1 x
1 x
2 x
1 x
2 x
2 x
7,5°
2 x
15°
1 x

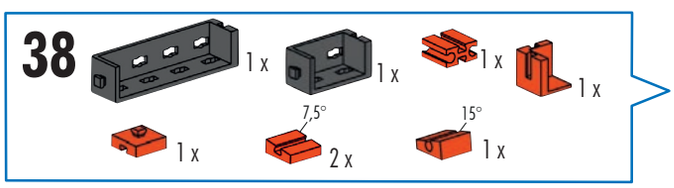
38
1 x
1 x
1 x
1 x
1 x
7,5°
2 x
15°
1 x

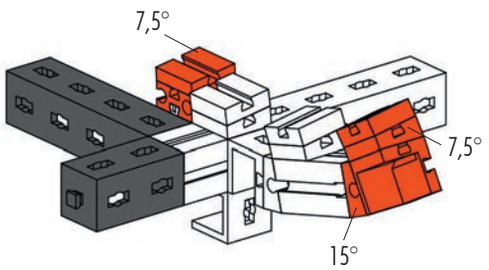
7,5°
7,5°
15°

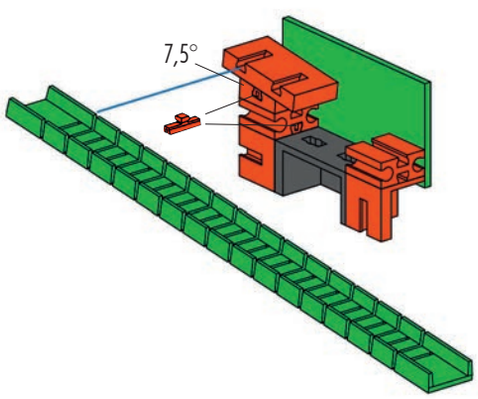
7,5°

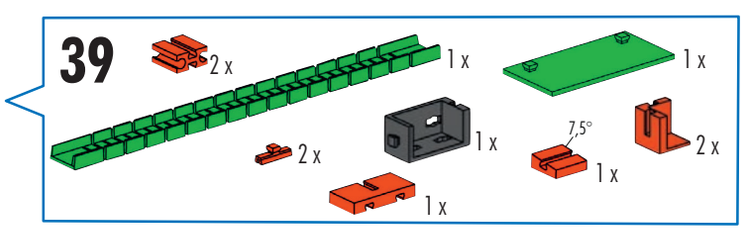
39
2 x
1 x
1 x
2 x
1 x
7,5°
1 x
2 x
1 x

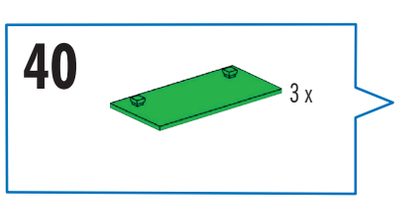
40
3 x

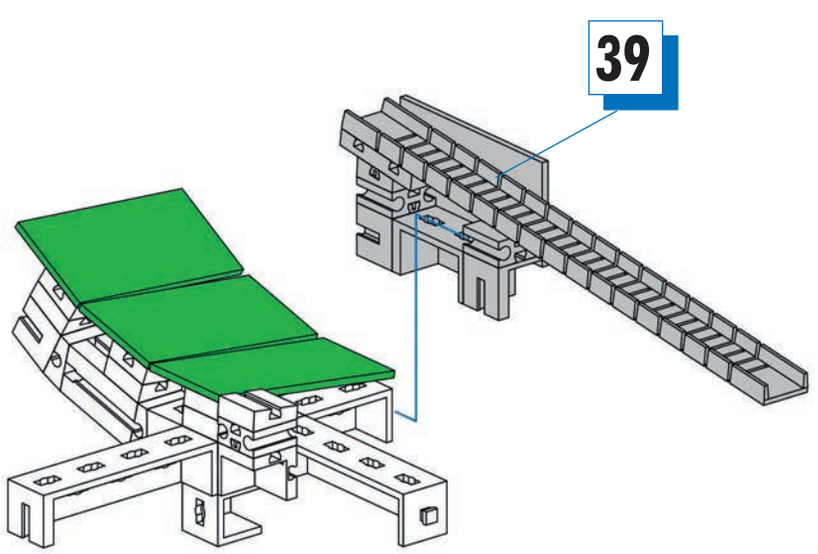
39

41

1 x

1 x

1 x

2 x

15°
3 x

30°
3 x

60°
2 x

1 x

4 x

1 x

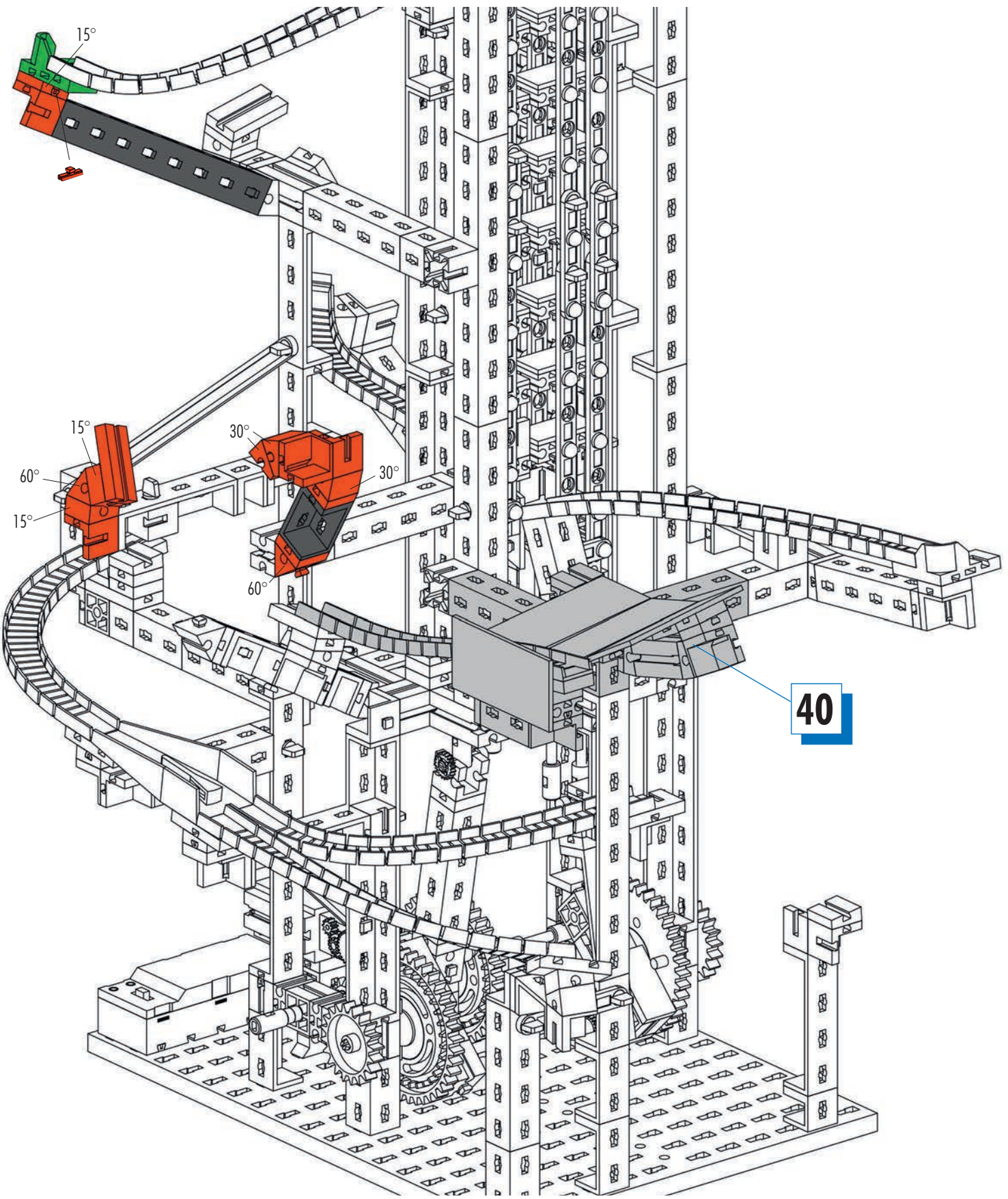

741

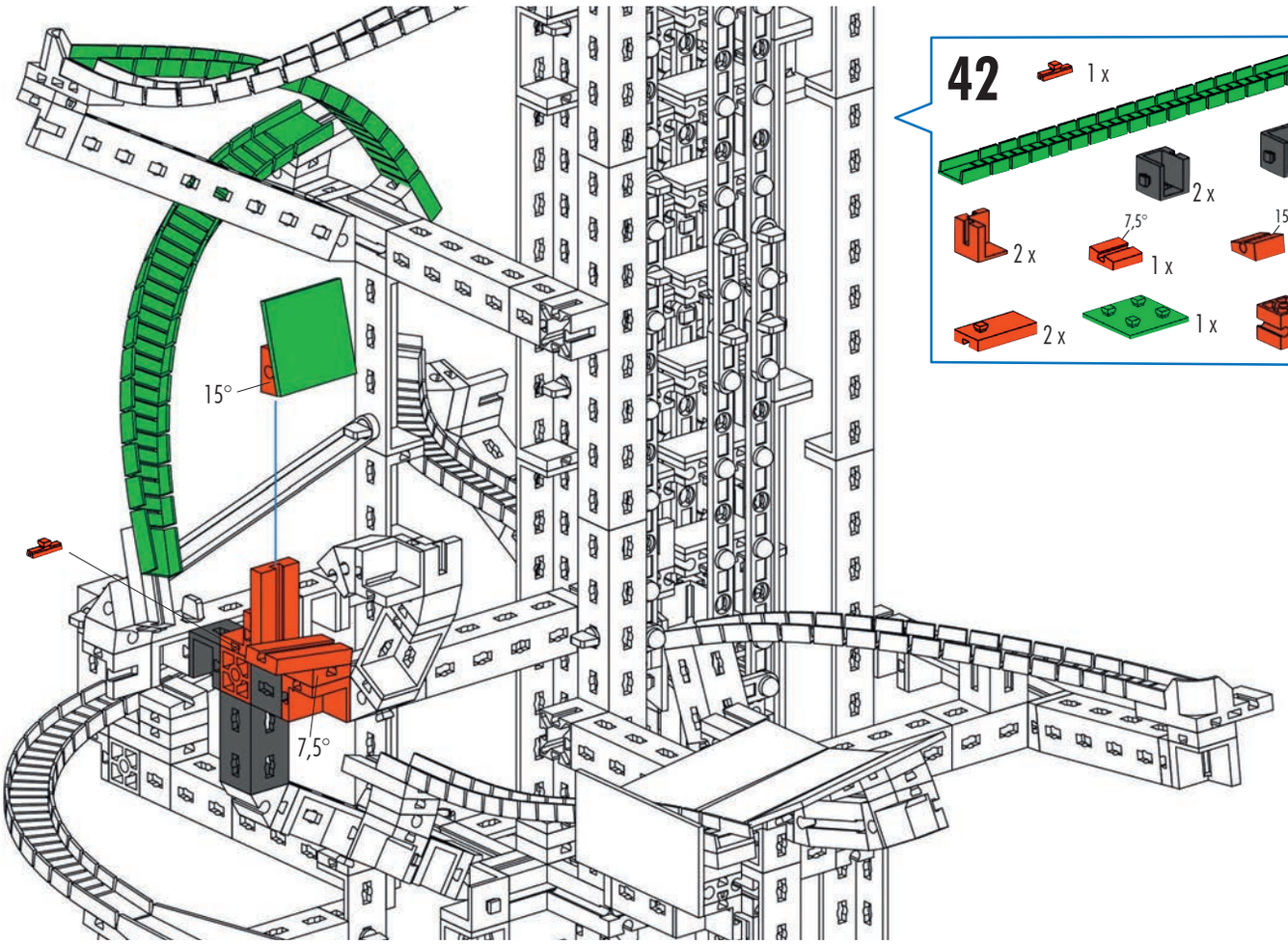

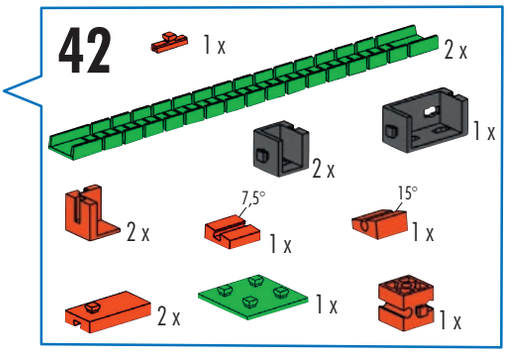

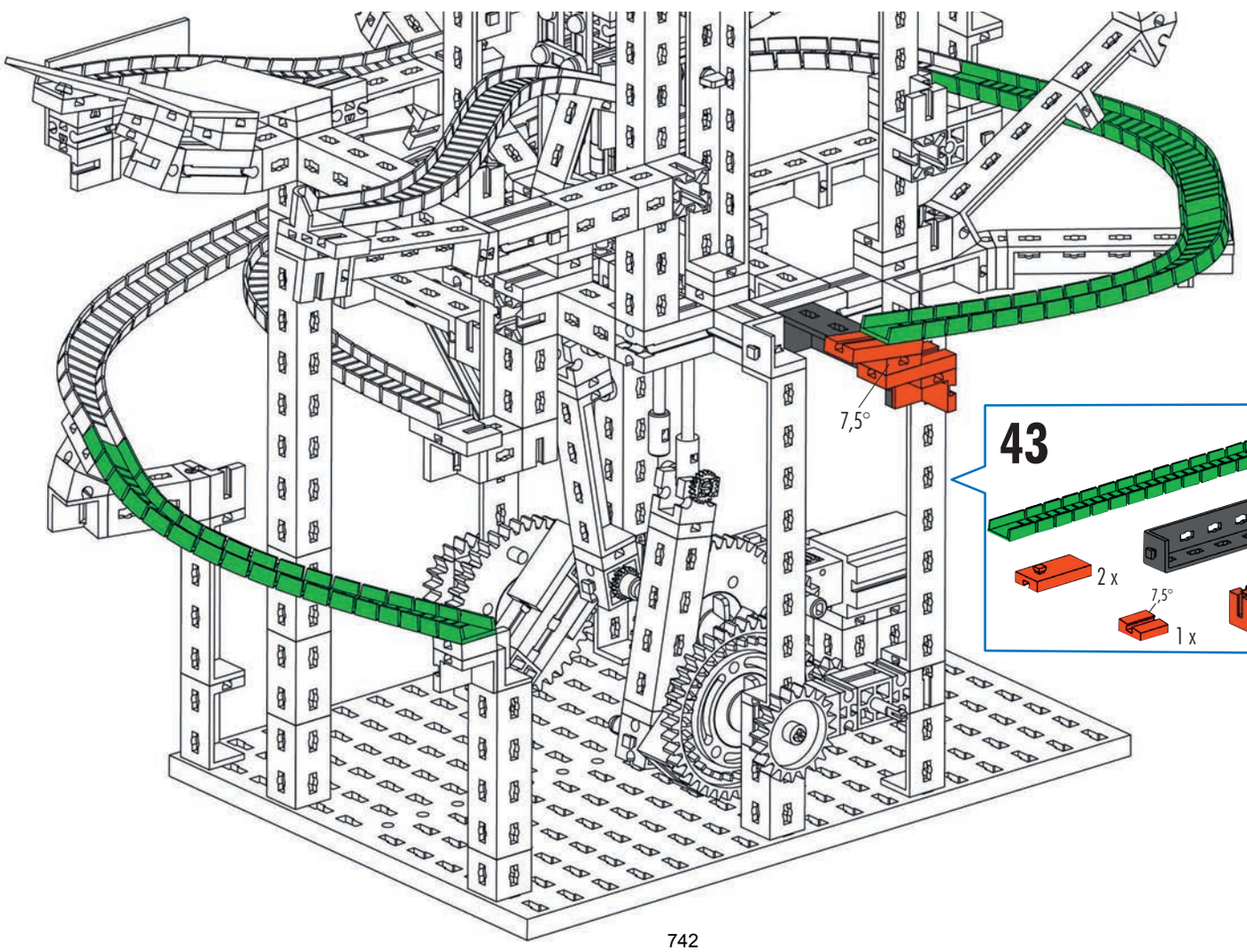

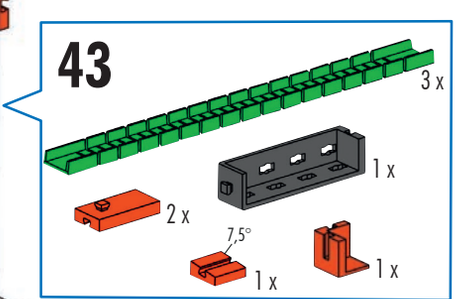

742

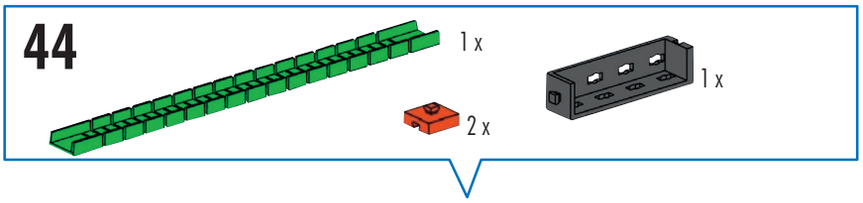
44
1 x
1 x
2 x

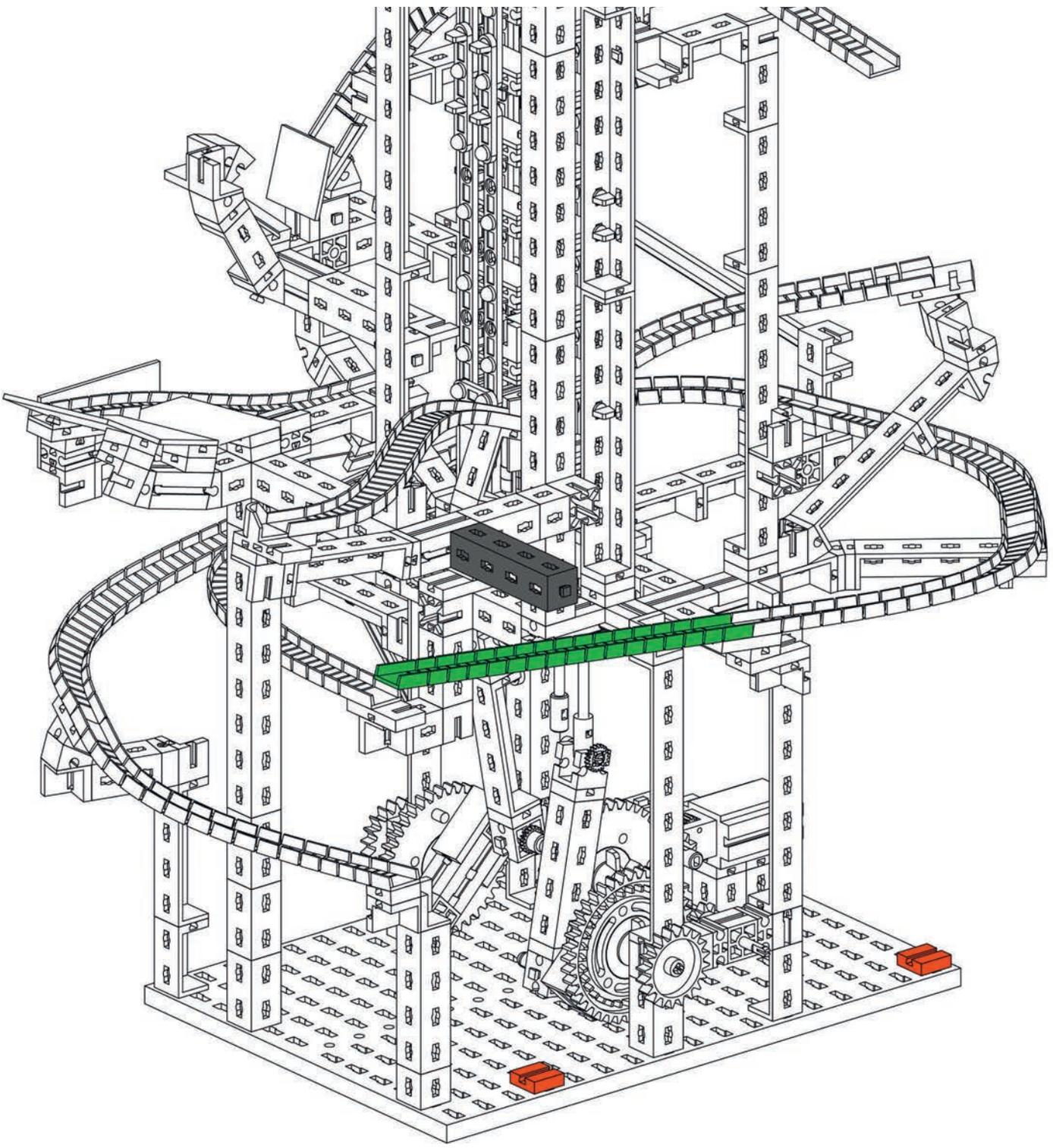

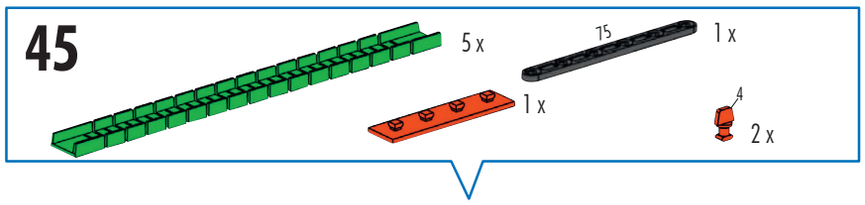
45
5 x
15
1 x
1 x
4
2 x

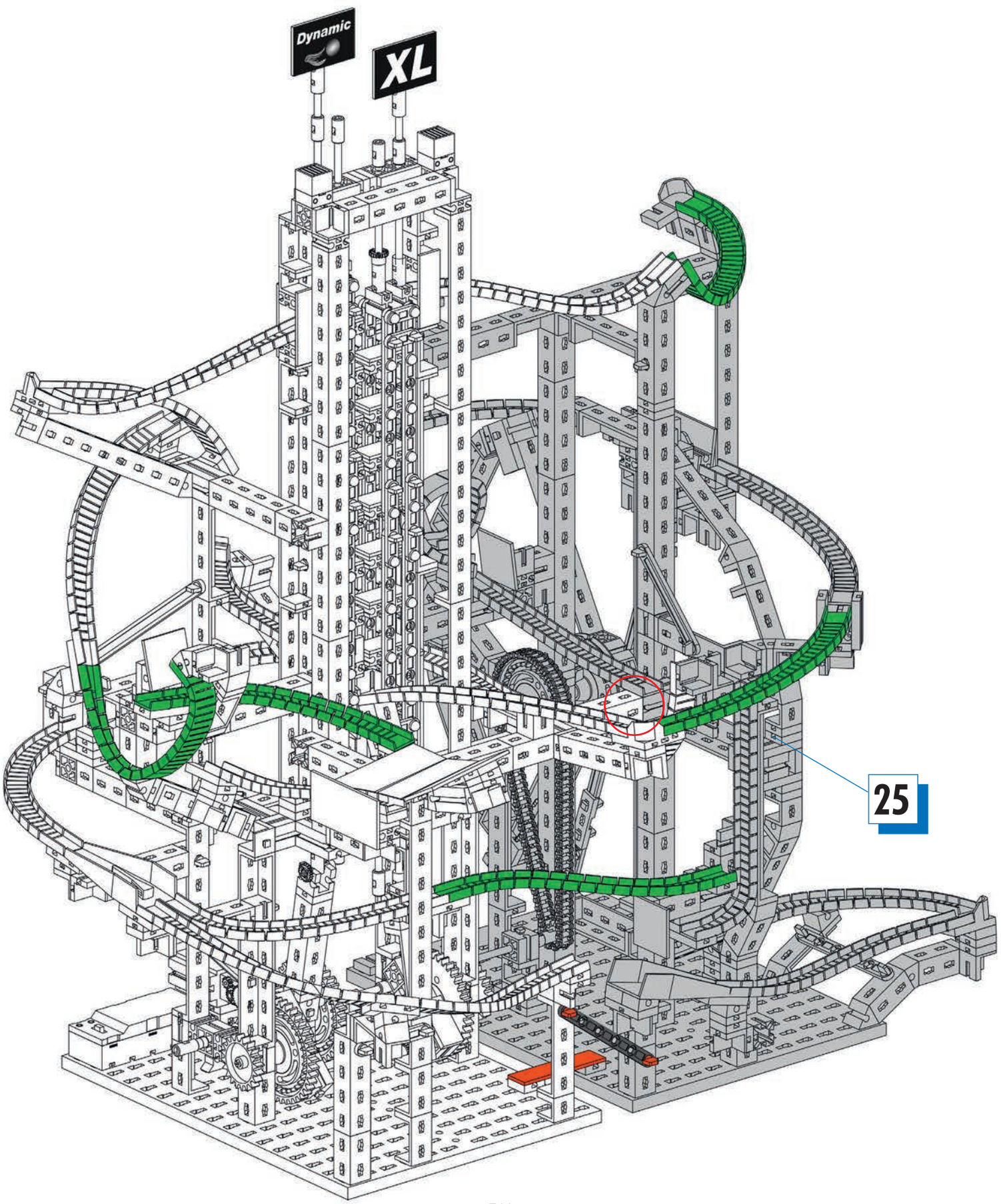
Dynamic
XL
25

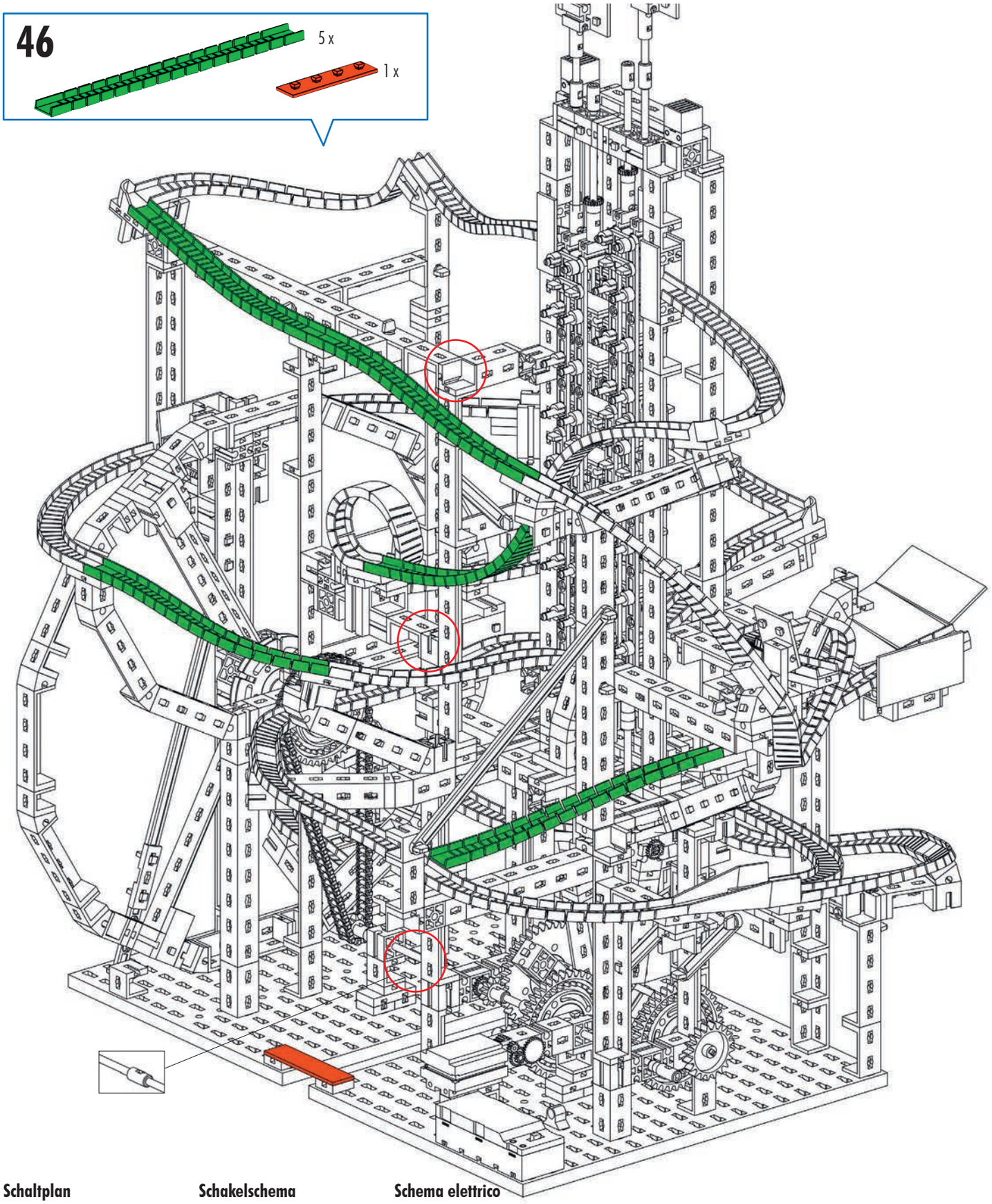

Schaltplan
Circuit diagram
Plan électrique

Schakelschema
Diagrama de circuitos
Plano elétrico de ligação

Schema elettrico
Схема подключения
电路图

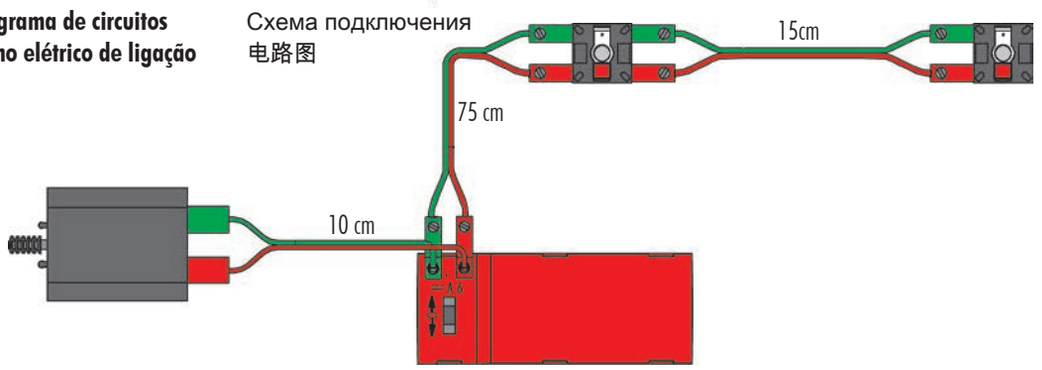

745

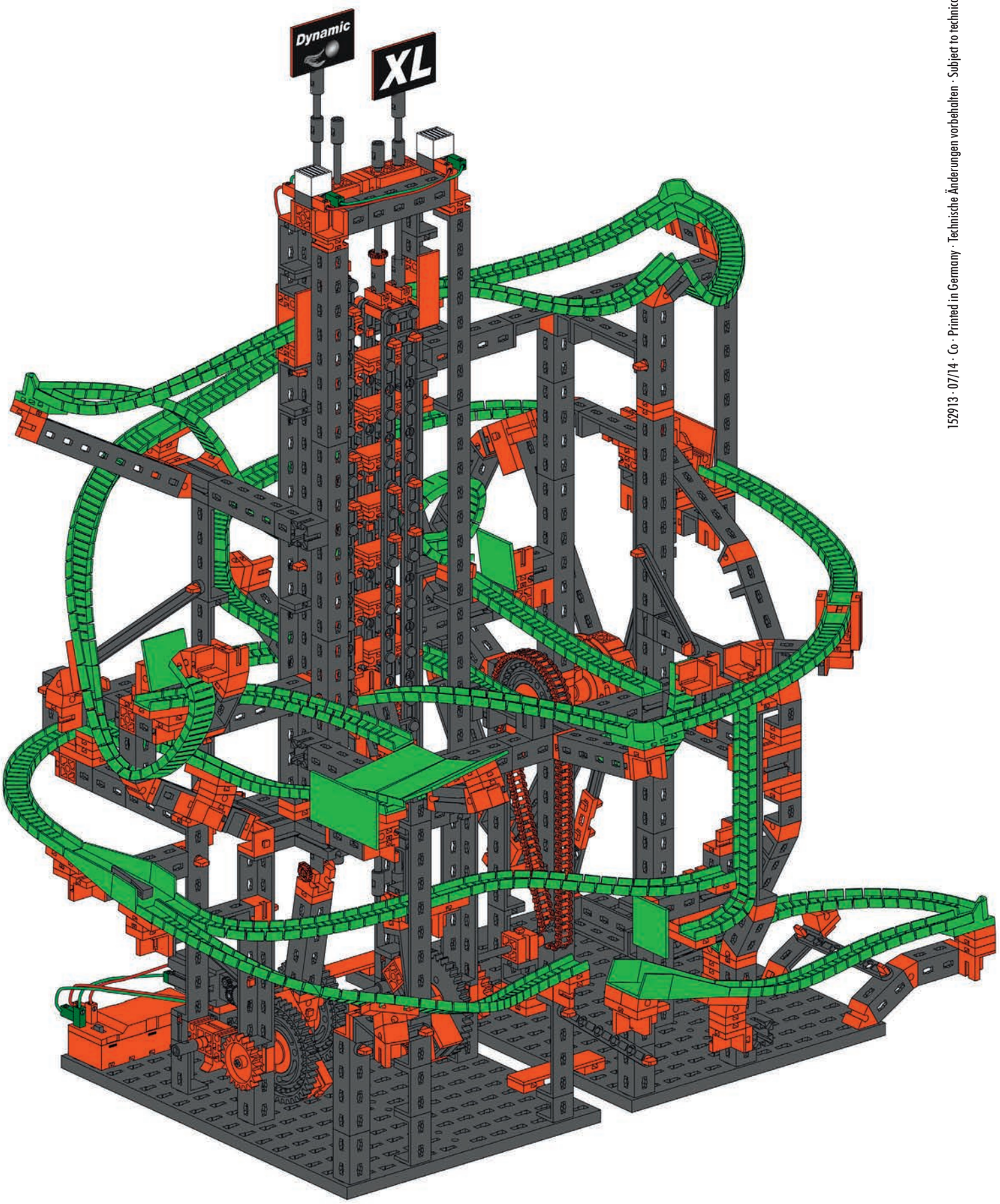

152913 · 07/14 · Co · Printed in Germany · Technische Änderungen vorbehalten · Subject to technical modifications

fischertechnik

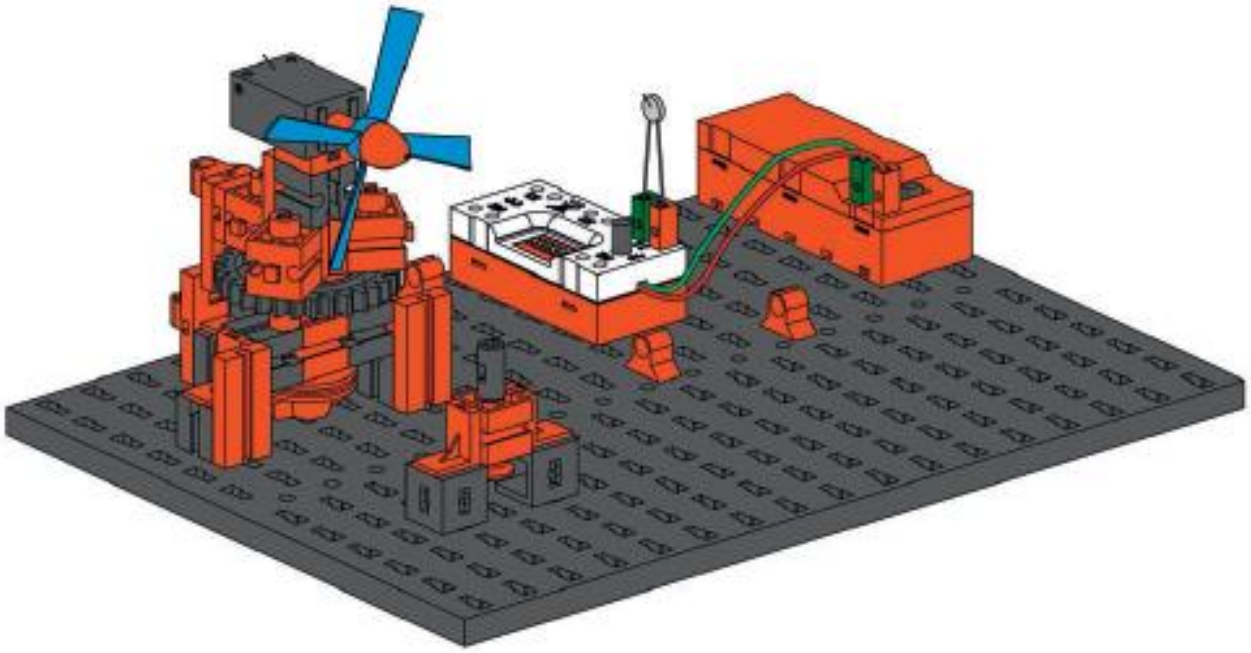

Electronics

Inhalt
Contents
Contenu
Inhoud
Contenido
Conteúdo
Contenuto
Содержание
目录

Einzelteilübersicht / Spare parts list / Liste des pièces détachées / Onderdelenoverzicht / Lista da piezas / Resumo de peça individual / Singoli componenti / Перечень деталей / 零件概览 2
Montagetipps / Tips for assembly / Tuyaux pour le montage / Montagetips / Consejos para el montaje / "Dicas" para montagem / Consigli per il montaggio / Советы по сборке / 装配建议 3

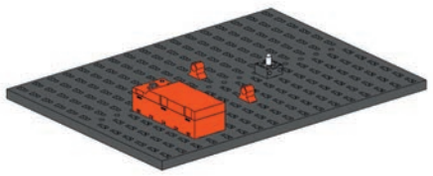

Einfacher Stromkreis / Simple electrical circuit / Simple circuit électrique / Eenvoudig stroomcircuit / Circuito de corriente simple / Circuito elétrico simples / Circuito elettrico semplice / Простая электрическая цепь / 简单电路 6

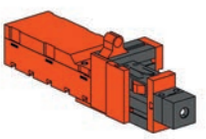

Taschenlampe / Flashlight / Lampe de poche / Zaklamp / Linterna / Lanterna / Torcia elettrica / Настольная лампа / 手电筒.....7

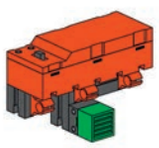

Durchgangsprüfer / Continuity tester / Contrôleur de continuité / Ohmmeter / Probador de continuidad / Dispositivo de teste de continuidade / Misuratore di continuità / Тестер / 断路检测仪 8

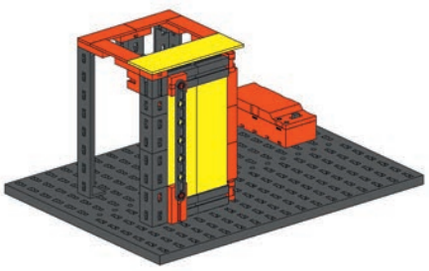

Kühlschrankbeleuchtung / Refrigerator light / Éclairage d'un réfrigérateur / Koelkastverlichting / Iluminación de refrigerador / Iluminação de refrigerador / Illuminazione frigorifero / Освещение холодильника / 冰箱照明灯 9

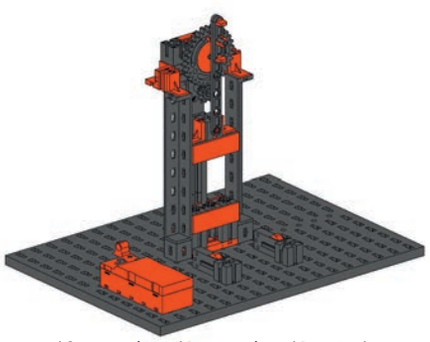

Stanze / Punch / Estampe / Stansmachine / Punzonadora / Punção / Pressa per coniare / Высечной пресс / 冲床 13

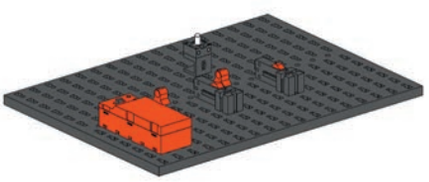

Parallelschaltung/ Parallel connection / Montage parallèle / Parallelschakeling / Conexión en paralelo / Conexão em paralelo / Collegamento in parallelo / Параллельное соединение / 并联 19

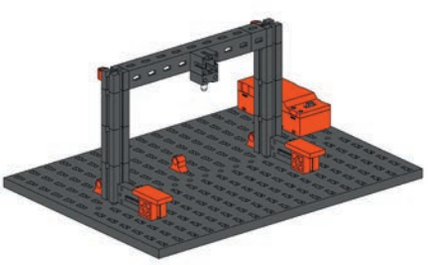

Flurbeleuchtung / Hallway lighting / Éclairage d'un couloir / Vloerverlichting / Iluminación se pasillo / Iluminação de corredor / Illuminazione corridoio / Освещение коридора / 走廊照明灯 21

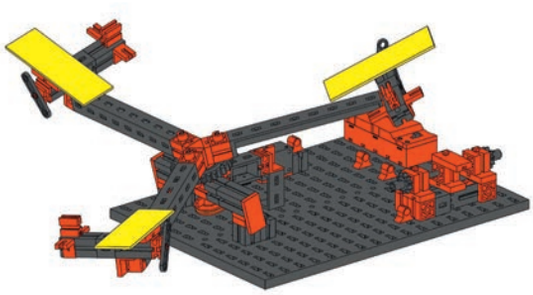

Karussell mit Polwendeschalter / Merry-go-round with pole reversing switch / Manège avec commutateur de polarité / Draaimolen met poolomkeerschakelaar / Tiovivo con interruptor conmutador de polos / Carrossel com comutador / Giostra con invertitore di polarità / Карусель с переключателем полюсов / 配备极性转换开关的旋转木马 23

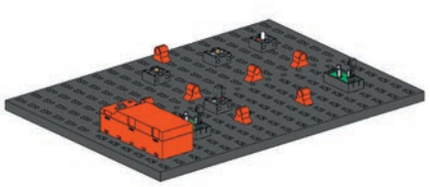

Einfacher Blinker / Simple flasher / Clignotant simple / Eenvoudig knipperlicht / Intermitente sencillo / Pisca-pisca simples / Lampeggiatore semplice / Простая мигалка / 单个闪烁灯 28

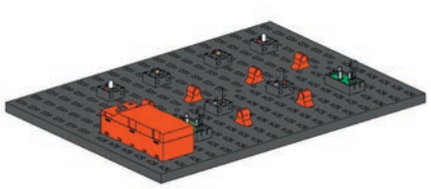

Wechselblinker / Alternating flasher / Clignotant alternant / Knipperlichtwisselaar / Intermitente alternado / Pisca-pisca comutável / Lampeggiatore alternato / Переменная мигалка / 两个交替的闪烁灯 30

Inhalt
Contents
Contenu

Inhoud
Contenido
Conteúdo

Contenuto
Содержание
目录

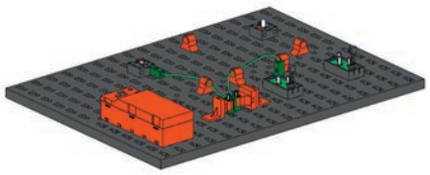

Berührungsschalter / Touch switch / Commutateur tactile / Contactschakelaar / Interruptor de contacto / Interruptor de toque / Interruttore a sfioramento / Сенсорный выключатель / 触摸式开关 32

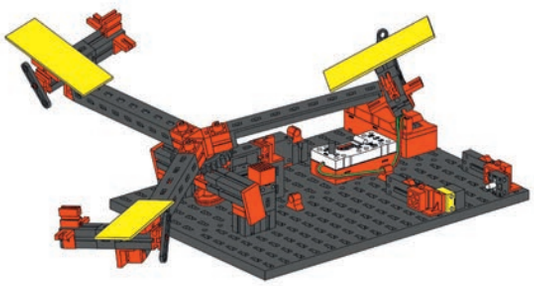

Karussell mit Lichtschranke / Merry-go-round with light barrier / Manège avec barrière lumineuse / Draaimolen met fotocel / Tiovivo con barrera fotoeléctrica / Carrossel com célula fotoelétrica / Giostra con barriera fotoelettrica / Карусель с фоторелейным барьером / 配备光栅的旋转木马.....36

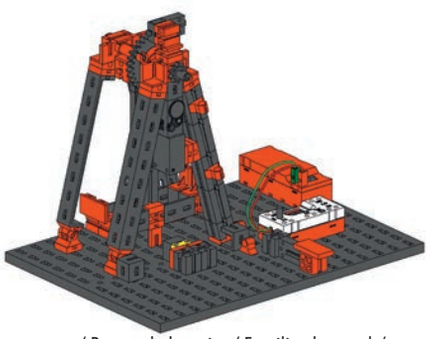

Schiffschaukel / Ship see-saw / Bateau-balançoire / Familieschommel / Columpio de barco / Balanço de barco / Altalena a gondola / Качели / 船形秋千 42

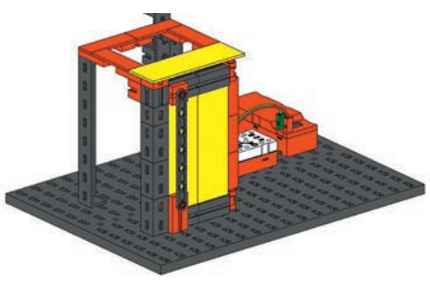

Alarmanlage / Alarm system / Système d'alarme / Alarminstallatie / Instalación de alarma / Equipamento de alarme / Impianto di allarme / Сигнализация / 报 / 警装置.....50

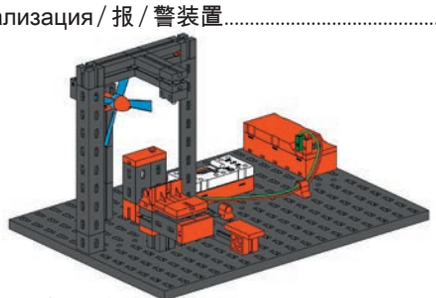

Badezimmerlüftung / Bathroom fan / Ventilation de la salle de bain / Badkamer-verlichting / Ventilación de cuarto de baño / Ventilação de banheiro / Aeratore per bagno / Вентиляция ванной комнаты / 浴室换气扇 57

Karussell / Merry-go-round / Manège / Draaimolen / Tiovivo / Carrossel / Giostra / Карусель / 旋转木马 34

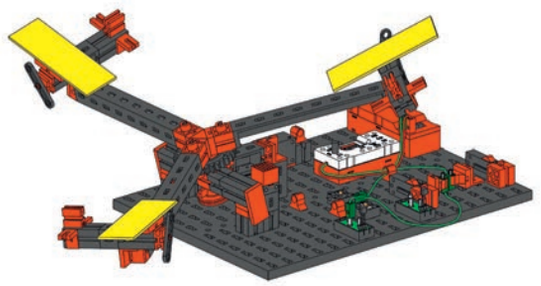

Karussell mit Berührungsschalter / Merry-go-round with touch switch / Manège avec commutateur tactile / Draaimolen met contactschakelaar / Tiovivo con interruptor de contacto / Carrossel com interruptor de toque / Giostra con interruttore a sfioramento / Карусель с сенсорным выключателем / 配备触摸式开关的旋转木马 39

Schiffschaukel mit Wechselblinker/ Ship see-saw with alternating flasher/ Bateau-balançoire avec clignotant alternant / Familieschommel met knipperlicht-wisselaar / Columpio de barco con intermitente alternado / Balanço de barco com pisca-pisca comutável / Altalena a gondola con lampeggiatore alternato / Качели с переменной мигалкой / 配备单个闪烁灯的船形秋千 ..48

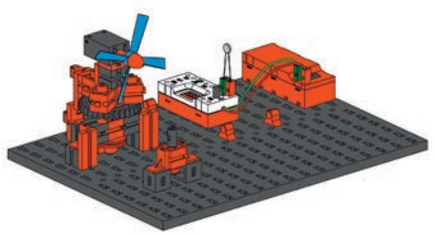

Ventilator / Ventilating fan / Ventilateur / Ventilator / Ventilador / Ventilador / Ventilatore / Вентилятор / 风扇 54

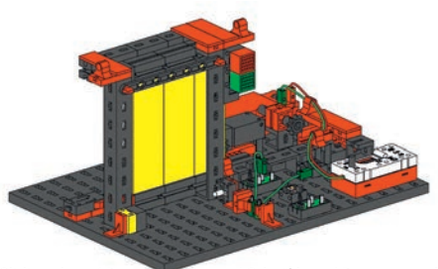

Schiebetür / Sliding door / Porte coulissante / Schuifdeur / Puerta corrediza / Porta corrediça / Porta scorrevole / Сдвижная дверь / 滑门 60

Einzelteilübersicht
Spare parts list
Liste des pièces détachées

Onderdelenoverzicht
Lista da piezas
Resumo de peça individual

Singoli componenti
Перечень деталей
零件概览

	31 053 2 x
	31 058 2 x
	31 078 1 x
	31 082 1 x
	31 336 30 x
	31 337 22 x
	31 426 2 x
	31 436 2 x
	31 597 2 x
	31 848 3 x
	31 918 1 x
	31 981 7 x
	31 982 16 x
	31 983 2 x
	32 064 11 x
	32 330 2 x
	32 850 2 x
	32 879 8 x
	32 881 8 x
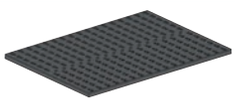	32 985 1 x
	35 031 2 x
	35 049 5 x
	35 063 1 x
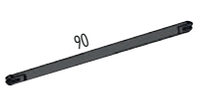	35 066 1 x
	35 073 1 x
	35 079 1 x
	35 084 1 x
	35 945 2 x
	35 969 8 x
	36 134 1 x
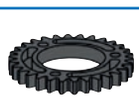	36 264 1 x
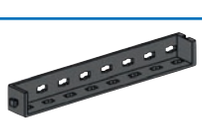	36 293 3 x
	36 323 2 x
	36 337 1 x
	36 437 1 x
	36 443 1 x
	36 532 1 x
	36 912 3 x
	36 920 4 x
	36 922 5 x
	36 981 1 x
	37 237 11 x
	37 468 8 x
	37 679 7 x
	37 681 1 x
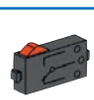	37 783 2 x
	37 875 1 x
	38 216 8 x
	38 240 4 x
	38 241 3 x
	38 242 4 x
	38 413 3 x
	38 414 1 x
	38 423 8 x
	38 428 6 x
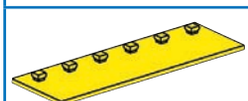	38 485 3 x
	38 543 1 x
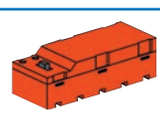	135 719 1 x
	136 775 1 x
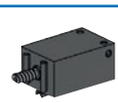	137 096 1 x
	152 059 2 x
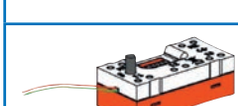	152 063 1 x
	152 218 2 x
	152 219 2 x
	152 220 2 x
	152 222 1 x
	152 223 2 x
	152 860 2 x

	152 948 1 x		152 949 1 x				

Ratschläge an überwachende Erwachsene
Advice for supervising adults
Recommandations à l'attention des adultes chargés de la surveillance

- Ausschließlich für Kinder von mindestens 8 Jahren geeignet. Die Anleitungen sollen den Erwachsenen befähigen die Experimente im Hinblick auf die Eignung für das betreffende Kind abzuschätzen.
- Not intended for children under 8 years of age. The instructions are intended to enable adults to assess the experiment's suitability for the child concerned.
- Boîte exclusivement appropriée aux enfants de plus de 8 ans. Les instructions devraient permettre aux adultes d'évaluer si l'enfant concerné est apte à effectuer les essais respectifs.

Adviezen voor de volwassene die toezicht houdt
Consejos de supervisión para adultos
Conselhos para os adultos vigilantes

- Uitsluitend geschikt voor kinderen vanaf minimaal 8 jaar. De gebruiksaanwijzingen dienen als hulp voor de volwassene om te kunnen beoordelen of de experimenten geschikt zijn voor het desbetreffende kind.
- Adecuado exclusivamente para niños de mínimo de 8 años. Las instrucciones deben facultar al adulto de evaluar el experimento con miras a su adecuación para el niño afectado.
- Adequado exclusivamente para crianças com, no mínimo, 8 anos. As instruções devem capacitar os adultos a avaliar os experimentos em relação à sua adequação para a criança pertinente.

Consigli per gli adulti che sorvegliano
Советы контролирующим взрослым
给进行监督的成人的建议

- Adatti esclusivamente per bambini di almeno 8 anni di età. I manuali devono consentire all'adulto di saper valutare gli esperimenti in merito alla loro adeguatezza per il bambino in questione.
- Только для детей старше 8 лет. Эти инструкции дают взрослым возможность оценить эксперименты с точки зрения их пригодности для ребёнка.
- 只适合于 8 岁以上的儿童 说明书应该能让成人判断该实验是否适合想做实验的孩子玩。

Montagetipps
Tips for assembly
Tuyaux pour le montage
Montagetips
Consejos para el montaje
"Dicas" para montagem
Consigli per il montaggio
Советы по сборке
装配建议

Kabel und Stecker
Plugs and cables
Fiches et des câbles
Stekkers en cables
Enchufes en cables
Cabos e contatos
Cavi e connettori
Провода и штекеры
电缆和插头

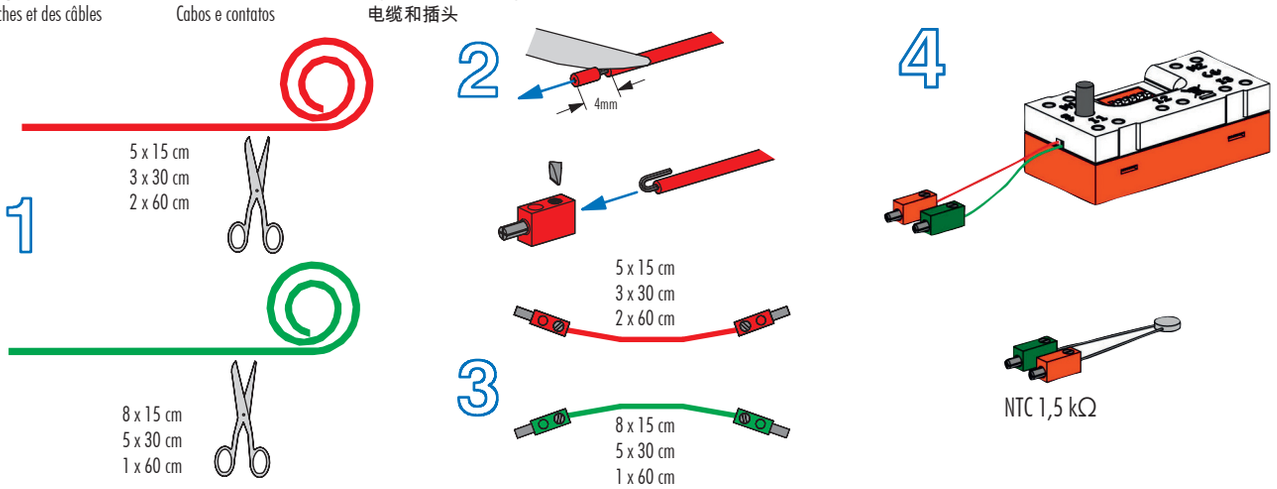

Fototransistor
Phototransistor
Phototransistor
Fototransistor
Fototransistores
Fototransistor
Fototransistor
Фототранзистор
光电晶体管

9V ⎓

Kondensator 10µF/35V
Capacitor 10µF/35V
Condensateur 10 µF / 35 V
Condensator 10µF/35V
Condensador 10µF/35V
Condensador 10µF/35V
Condensatore 10µF/35V
Конденсатор 10 мкФ/35 В
电容 10µF/35V

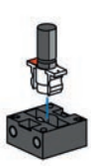
2 x

LED
LED
DEL
LED
LED
LED
LED
Светодиод
LED

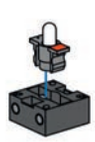
2 x

Achtung: Beim Anschluß auf richtige Polung achten. Rot = +
Caution: Make sure the terminals are connected correctly. Red = +
Attention: lors du raccordement, veiller à ce que la polarisation soit exacte, rouge = +
Pas op: let bij het aansluiten op de juiste polariteit, rood = +
Atencioón: al conectar, procurar que los polos estén correctamente colocados, roja = +
Atenção: Por ocasião da conexão atentar para a polaridade correta. Vermelho = +
Attenzione: nel collegamento osservare la corretta polarità. Rosso = +
Внимание: при подключении соблюдать полярность. Красный = +
注意：连接时应注意极性正确。红色 = +

Montagetipps
Tips for assembly
Tuyaux pour le montage

Montagetips
Consejos para el montaje
"Dicas" para montagem

Consigli per il montaggio
Советы по сборке
装配建议

Linsenlampe
Lens tip lamp
Ampoule lentille
Lenslampje
Lampada lenticolare
Lâmpada de formato lenticular
Lampada lenticolare
Лампа с линзой
透镜灯

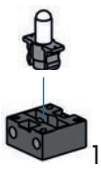

≠

LED
LED
DEL
LED
LED
LED
LED
Светодиод
LED

Transistor BC 547 C
flache Seite nach außen
flat side outward
côté plat vers l'extérieur
vlakke zijde naar buiten
lado plano hacia fuera
face plana virada para fora
lato piatto verso l'esterno
Транзистор BC 547 C
плоская сторона наружу
晶体管 BC 547 C
扁平侧朝外

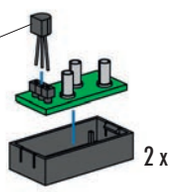

Widerstand 100kΩ, Sockel grau
100kΩ Resistor, gray base
Résistance 100 kΩ, socle gris
Weerstand 100kΩ, sokkel grijs
Resistencia 100kΩ, zócalo gris
Resistor 100kΩ, casquilho cinza
Resistore 100kΩ, base grigia
Сопротивление 100 кОм, серый цоколь
电阻 100kΩ, 灰色底座

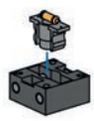

Widerstand 10kΩ, Sockel weiß
10kΩ Resistor, white base
Résistance 10 kΩ, socle blanc
Weerstand 10kΩ, sokkel wit
Resistencia 100kΩ, zócalo blanco
Resistor 100kΩ, casquilho branco
Resistore 100kΩ, base bianca
Сопротивление 10 кОм, белый цоколь
电阻 10kΩ, 白色底座

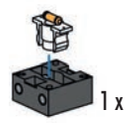

1

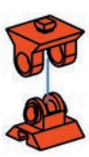

2

Sicherheitshinweise
Safety Information
Consignes de sécurité

- Lies die Anleitung vor Versuchsbeginn, befolge sie und halte sie nachschlagebereit.
- Bewahre den Experimentierkasten außerhalb der Reichweite von kleinen Kindern auf.
- Alle Einzelteile, insbesondere bewegliche Teile sind falls notwendig zu warten und zu reinigen.
- Achtung! Verletzungsgefahr an Bauteilen mit funktionsbedingten scharfen Kanten und Spitzen!

- Read these instructions before starting experiments; ensure they are followed and kept readily available for reference.
- Keep the experiment kit out of reach of small children.
- All components, especially moving parts, should be maintained and cleaned as necessary.
- Caution! Be careful not to hurt yourself on components with sharp or pointed edges!

- Lisez le mode d'emploi avant de commencer les essais, suivez-le et maintenez-le à disposition afin que vous puissiez le consulter à tout moment.
- Rangez la boîte expérimentation hors de portée de mains des enfants en bas âge.
- Toutes les pièces détachées et en particulier les pièces mobiles, sont, si nécessaire, à entretenir et à nettoyer.
- Attention! Risque de blessure sur les élements comportant des arêtes et o pointes vives indispensables au bon fonctionnement!

Veiligheidsrichtlijnen
Indicaciones de seguridad
Observações sobre segurança

- Lees de gebruiksaanwijzing voor het begin van het experiment door, volg de aanwijzingen erin op en houd haar binnen handbereik voor als u het niet meer weet.
- Houd de experimenteerdoos uit de buurt van kleine kinderen.
- Alle onderdelen, vooral de bewegende delen, kunnen, indien noodzakelijk, onderhouden en gereinigd worden.
- Let op! U kunt zich bezeren aan bouwstenen met sherpe randen of punten!

- Lee estas instrucciones antes de iniciar el ensayo, cúmplelas y tenlas a mano para consultas.
- Guarda la caja de experimentación fuera del alcance de niños pequeños.
- Es necesario limpiar y mantener en buen estado todas las diferentes piezas - especialmente las piezas móviles.
- Attenzione! Esiste il pericolo di lesione con i pezzi di costruzione che hanno bordi e punte spigolosi necessari per la funzionalita del pezzo!

- Leia as instruções antes do início do experimento, observe-as e mantenha-as sempre à mão para verificação.
- Guarde a caixa de experimentos fora do alcance de crianças pequenas.
- Caso necessário, todas as peças individuais, especialmente peças móveis, tem que ser submetidas à manutenção e ser limpadas.
- Atenção! Perigo de ferimentos em peças componentes com cantos vivos e pontas obrigatórios para o funcionamento !

Informazioni per la sicurezza
Указания по технике безопасности
安全指南

- Leggi le istruzioni prima di iniziare l'esperimento, rispettale e tienile a portata di mano per poterle consultare in caso di bisogno.
- Conserva la cassetta di sperimentazione lontano dalla portata dei bambini piccoli.
- Se necessario, tutti i singoli componenti, soprattutto le parti mobili, si devono eventualmente sottoporre a manutenzione e pulizia.
- Attenzione! Pericolo di lesioni dovute a componenti con spigoli vivi e punte per motivi funzionali!

- Прочитай инструкцию до начала эксперимента, выполняй её требования и держи наготове, чтобы обратиться к ней при необходимости.
- Храни набор для экспериментов в месте, недоступном для маленьких детей.
- Все детали, особенно подвижные, требуют ухода и чистки.
- Будьте осторожны! Об острые края деталей и и наконечники можно порезаться!

- 请在使用前阅读说明书，并遵守及妥善保管，以备将来参考。
- 实验构件要存放在幼儿够不到的地方。
- 必要时应保养和清洁所有零件，尤指运动部件。
- 注意！因功能需要而带有锋利的棱边和尖角的部件可能会带来受伤危险！

Sicherheitshinweise
Safety Information
Consignes de sécurité
Veiligheidsrichtlijnen
Indicaciones de seguridad
Observações sobre segurança
Informazioni per la sicurezza
Указания по технике безопасности
安全指南

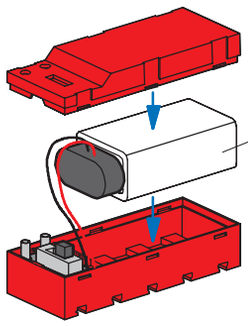

9V E-Block
6F22 / 6R61
⎓

Batterie ist nicht Inhalt der Packung
Battery not included
Batterie non comprise
De batterij wordt niet meegeleverd
La bateria no está incluida en el suministro
A bateria não é o conteúdo da embalagem
La batteria non è inclusa nella confezione
Батарея в комплект не входит
包装中不含电池

1 Batterie 9Volt-Block Alkaline oder 1 NiMH-Akku 9V

- Nicht wiederaufladbare Batterien dürfen nicht geladen werden
- Aufladbare Batterien dürfen nur von Erwachsenen geladen werden
- Aufladbare Batterien sind aus dem Batteriehalter herauszunehmen, bevor sie geladen werden.
- Batterien müssen mit der richtigen Polarität eingelegt werden.
- Leere Batterien müssen aus dem Spielzeug herausgenommen werden
- Die Anschlussklemmen dürfen nicht kurzgeschlossen werden.
- Verbrauchte Batterien dem Sondermüll zuführen.
- Drähte nicht in Steckdose einführen!
- Ladegerät regelmäßig auf Schäden überprüfen.Bei einen Schaden darf das
- Ladegerät bis zur vollständigen Reparatur nicht mehr verwendet werden.
- Alle elektrischen Bauteile (Motoren, Lampen) dürfen ausschließlich an Stromversorgungen von fischertechnik angeschlossen werden.
- Achtung! Durch (Schaltungs-) Fehler oder unzulässige Veränderungen können Temperaturerhöhungen an berührbaren Oberflächen die zulässigen Grenzwerte überschreiten.
- Durch eine zu hohe Spannung oder durch einen Kurzschluss können elektronische Bauteile zerstört werden.

9V rechargeable battery or 9 V alkaline dry cell

- Do not attempt to charge NON-rechargeable batteries.
- Rechargeable batteries are only to be charged by adults.
- Take rechargeable batteries out of the battery tray before charging them.
- Insert batteries with the correct polarity.
- Remove dead batteries from the toy.
- Do not short circuit the connecting terminals!
- Discard spent dry cells at special waste disposal centre.
- Do not insert the wires into an outlet!
- Regularly inspect battery charger for damage.If the battery charger has been damaged, it should not be used further until fully repaired.
- No electrical components (motors, lamps) are to be connected to any other power supply than that provided by fischertechnik.
- Caution! (Connection) errors or unauthorized changes can cause temperature increases on exposed surfaces that can exceed allowable limits.
- Impermissibly high voltage or a short circuit can destroy electronic components.

pile 9V où accu 9V

- Il est interdit de recharger des piles qui ne sont pas des accumulateurs
- Le chargement des accumulateurs doit toujours se faire par des adultes
- Retirer les accumulateurs du support de pile avant de les recharger.
- Veiller à la polarité correcte lors de la mise en place des piles.
- Retirer impérativement les piles ou accumulateurs vides du jouet.
- Il est interdit de court-circuiter les bornes de raccordement.
- Jeter les piles usagées dans un conteneur spécial réservé à cet effet.
- Ne pas introduire les fils dans une prise !
- Contrôlez régulièrement le chargeur en vue d'éventuelles détériorations
- En cas de détérioration, il est interdit d'utiliser le chargeur jusqu'à ce qu'il ait été intégralement réparé
- Tous les composants électriques (moteurs, lampes) ne doivent être branchés aux alimentations électriques uniquement que par la société Fischertechnik.
- Attention ! Les erreurs (de commutation) ou les modifications inadmissibles peuvent avoir pour effet d'augmenter la température des surfaces, qu'on peut toucher, au-delà des valeurs limites admissibles.
- Une tension trop élevée ou un court-circuit risque de détériorer les éléments de construction électroniques.

alkaline batterije of oplaadbare batterije (9Volt)

- Niet-oplaadbare batterijen mogen niet worden opgeladen.
- Oplaadbare batterijen mogen uitsluitend door volwassenen worden opgeladen.
- Oplaadbare batterijen moeten uit de batterijhouder worden verwijderd, voordat deze worden opgeladen.
- De batterijen moeten met de juiste polariteit worden geplaatst.
- Lege batterijen moeten uit het speelgoed worden verwijderd.
- De aansluitklemmen mogen niet worden kortgesloten.
- Afleveren gebruikte batterijen bij het klein chemisch afval (KCA).
- Geen draden in de contactdoos steken!
- Laadtoestel regelmatig controleren op schade.Bij schade mag het laadtoestel niet meer gebruikt worden tot het volledig hersteld is.
- Alle elektrische componenten (motoren, lampen) mogen uitsluitend op stroomvoorzieningen van fischertechnik worden aangesloten.
- Attentie! Door (schakel-)fouten of ontoelaatbare veranderingen kunnen temperatuurverhogingen ontstaan op aanraakbare oppervlakken die de toegestane grenswaarden overschrijden.
- Door een te hoge spanning of door kortsluiting kunnen elektronische componenten onherstelbaar worden beschadigd.

pila alcalina bloque de 9 Voltios o acumulador NiMH- de 9 Voltios

- Las pilas no recargables no pueden ser cargadas
- Las pilas recargables sólo pueden ser cargadas por un adulto
- Las pilas recargables deben ser extraídas del compartimiento de pilas antes de que sean cargadas.
- Las pilas deben ser colocadas con la polaridad correcta.
- Las pilas descargadas deben ser extraídas del juguete
- Los bornes de conexión no pueden ser puestos en cortocircuito.
- Retirar las baterías viejas, desechándolas en un depósito de basuras especiales.
- No introducir hilos en la toma de corriente!
- Comprobar con regularidad si el cargador presenta daños.En caso de presentar daños, el cargador no debe volver a ser utilizado hasta que esté completamente reparado.
- Todos los componentes eléctricos (motores, luces) deben conectarse a la alimentación de corriente de la técnica Fischer exclusivamente.
- ¡Atención! Debido a errores (de circuito) o modificaciones inadmisibles, los incrementos de temperatura en superficies de contacto pueden sobrepasar los valores límite admisibles.
- Debido a una tensión demasiado elevada o por un cortocircuito se pueden destruir componentes electrónicos.

Bateria alcalina de bloco de 9 V ou acumulador NiMH- de 9 V

- Pilhas não recarregáveis não devem ser novamente carregadas.
- Pilhas recarregáveis somente devem ser recarregadas por adultos.
- Pilhas recarregáveis devem ser retiradas do compartimento de pilhas antes de serem carregadas.
- As pilhas devem ser colocadas com a polaridade correta.
- As pilhas descarregadas devem ser retiradas do brinquedo.
- Os terminais de conexão não devem ser curto-circuitados.
- Eliminar as baterias esgotadas como desperdício perigoso
- Nunca introduzir fios na tomada!
- Verificar regularmente se o carregador apresenta danos.Em caso de dano, o carregador não deverá ser utilizado enquanto não estiver plenamente consertado.
- Todas as peças componentes elétricas (motores, lâmpadas) só podem ser exclusivamente conectadas em abastecimentos de corrente da Fischertechnik.
- Atenção! Através de erros (de conexão) ou alterações inadmissíveis, os aumentos de temperatura podem exceder os valores limite admissíveis em superfícies expostas a contato.
- Devido a uma tensão muito alta ou devido a um curto-circuito, os componentes podem ser destruídos.

1 batteria alcalina da 9 V o 1 batteria NiMH- ricaricabile da 9V

- Le batterie non ricaricabili non devono essere ricaricate
- Le batterie ricaricabili devono essere ricaricate da persone adulte
- Le batterie ricaricabili si devono estrarre dal supporto prima di ricaricarle.
- Le batterie si devono inserire rispettando la polarità.
- Togliere le batterie dal giocattolo quando sono scariche
- I morsetti di allacciamento non devono essere cortocircuitati.
- Smaltire le batterie usate negli appositi contenitori per la raccolta differenziata.
- Non inserire i fili nella presa elettrica.
- Controllare periodicamente se il caricabatterie presenta dei danni.In caso di danni, il caricabatterie non deve più essere utilizzato fino alla riparazione.
- Tutti i componenti elettrici (motori, lampadine) devono essere collegati esclusivamente ad alimentatori fischertechnik.
- Attenzione! Errori (di cablaggio) o modifiche non consentite possono fare aumentare oltre i limiti ammessi la temperatura delle superfici che si possono toccare.
- Una tensione troppo elevata o un cortocircuito possono distruggere i componenti elettronici.

1 алкалиновая батарейка на 9 В или 1 никель-кадмиевый аккумулятор, 9 В

- Не пытайтесь заряжать неперезаряжаемые батарейки.
- Зарядку перезаряжаемых аккумуляторов разрешается выполнять только взрослым.
- Перед зарядкой перезаряжаемых аккумуляторов извлеките их из аккумуляторного отсека.
- При установке аккумуляторов на место соблюдайте полярность.
- Разряженные батарейки необходимо извлечь из игрушки.
- Не замыкайте накоротко соединительные клеммы.
- Использованные батареи утилизовать как спецотходы.
- Не вставляйте в розетку провода!
- Регулярно проверяйте зарядное устройство на отсутствие повреждений.При налиРии повреждений использовать зарядное устройство до выполнения его полного ремонта не разрешается.
- Все электрические детали (электромоторы, лампочки.) можно подключать только к источникам электропитания от fischertechnik.
- Внимание! Из-за ошибок (в соединениях) или неразрешённых изменений возможен нагрев касаемых поверхностей выше допустимых значений.
- Из-за высокого напряжения или короткого замыкания может произойти разрушение электронных деталей.

1 个 9V 的碱性方电池或 1 个 9V 的 NiMH- 蓄电池

- 不得给非充电电池充电
- 只允许由成年人给充电电池充电
- 在充电前必须将充电电池从电池夹中取出。
- 必须按照正负极正确放入电池。
- 必须从玩具中取出没有电的电池
- 接线柱不允许被短路。
- 用完了的电池应作为特种垃圾处理。
- 禁止将金属丝插入插座！
- 经常检查充电器是否有损坏情况。如果充电器有损，直到完全修好为止不 可以再使用。
- 只允许将所有电气部件 (传感器，电机，灯泡) 与慧鱼技术产品的电源装置相连接
- 注意！由（接线）故障或未经允许的改装可能会使可接触表面的温度超过允许的极限值。
- 过高的电压或者短路可能会损坏电子部件。

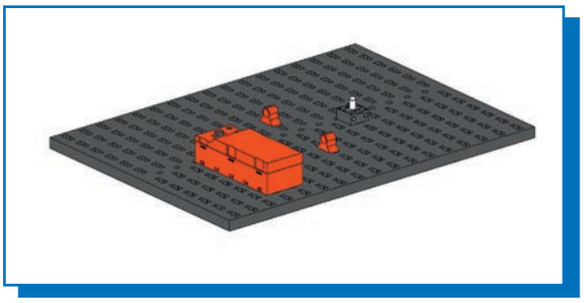

Einfacher Stromkreis
Simple electrical circuit
Simple circuit électrique
Eenvoudig stroomcircuit
Circuito de corriente simple
Circuito elétrico simples
Circuito elettrico semplice
Простая электрическая цепь
简单电路

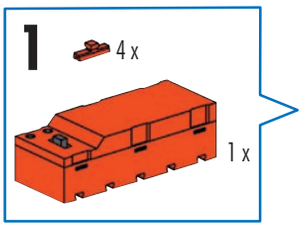

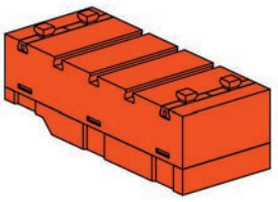

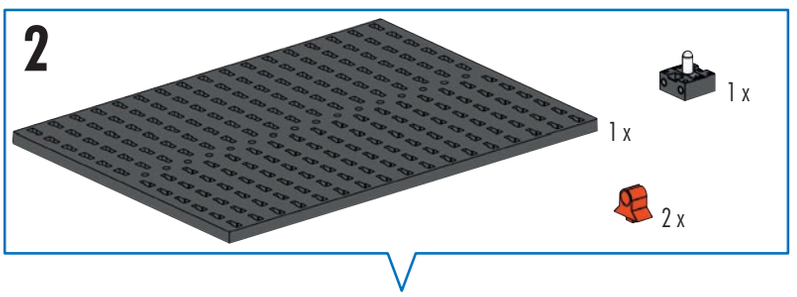

Linsenlampe
Lens tip lamp
Ampoule lentille
Lenslampje
Lampada lenticolare
Lâmpada de formato lenticular
Lampada lenticolare
Лампа с линзой
透镜灯

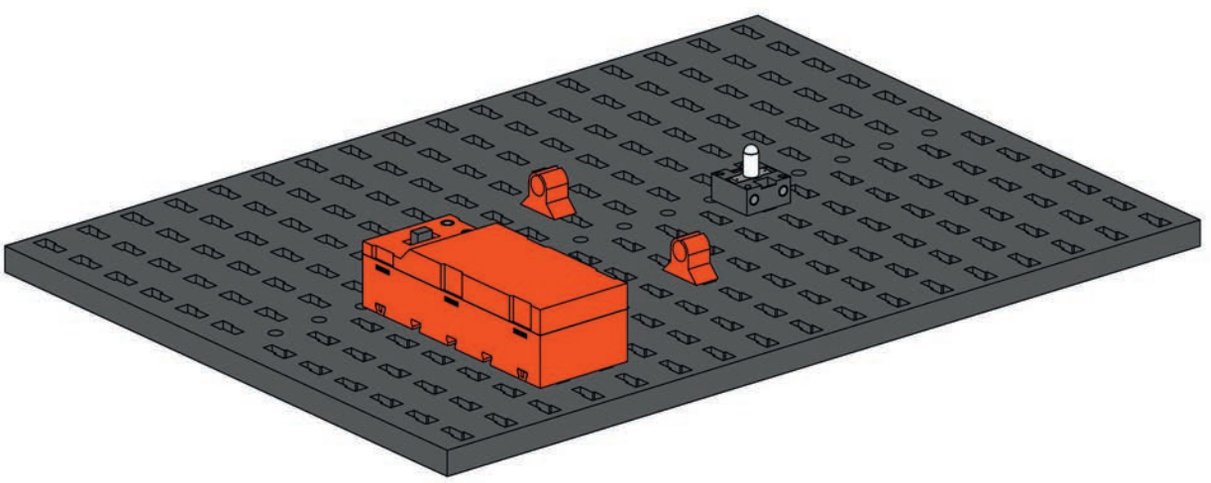

Schaltplan
Circuit diagram
Plan électrique

Schakelschema
Diagrama de circuitos
Plano elétrico de ligação

Schema elettrico
Схема подключения
电路图

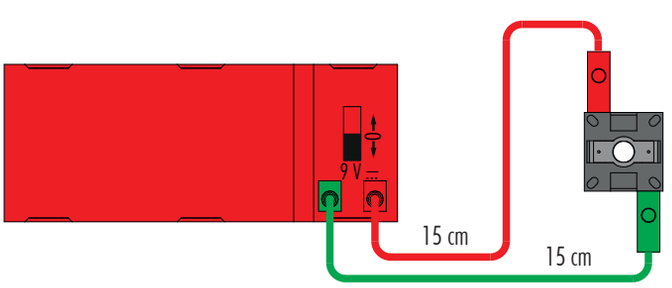

Linsenlampe
Lens tip lamp
Ampoule lentille
Lenslampje
Lampada lenticolare
Lâmpada de formato lenticular
Lampada lenticolare
Лампа с линзой
透镜灯

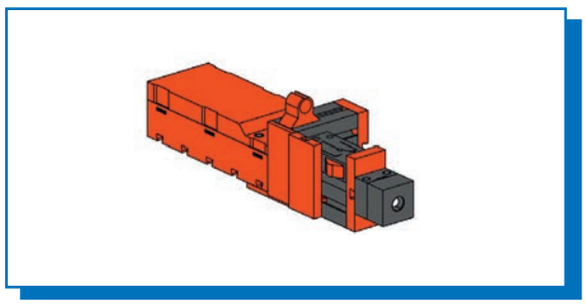

Taschenlampe
Flashlight
Lampe de poche
Zaklamp
Linterna
Lanterna
Torcia elettrica
Настольная лампа
手电筒

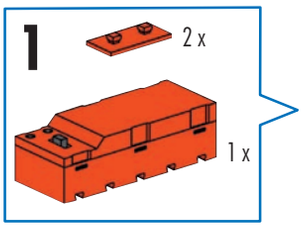

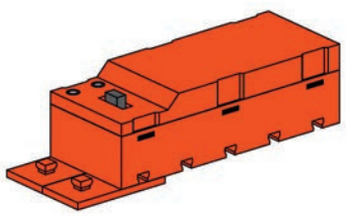

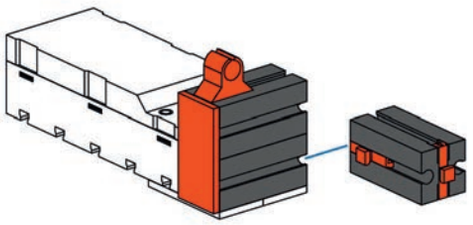

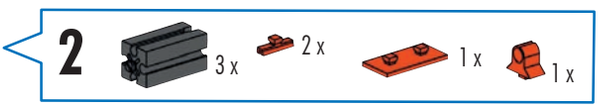

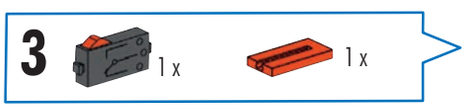

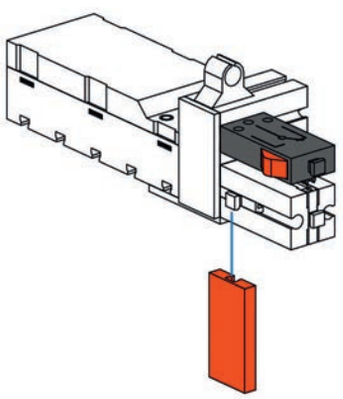

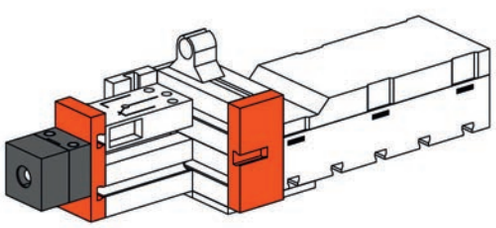

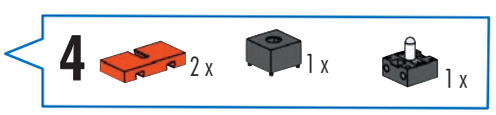

Linsenlampe
Lens tip lamp
Ampoule lentille
Lenslampje
Lampada lenticolare
Lâmpada de formato lenticular
Lampada lenticolare
Лампа с линзой
透镜灯

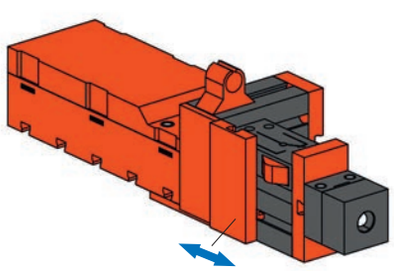

Schaltplan
Circuit diagram
Plan électrique

Schakelschema
Diagrama de circuitos
Plano elétrico de ligação

Schema elettrico
Схема подключения
电路图

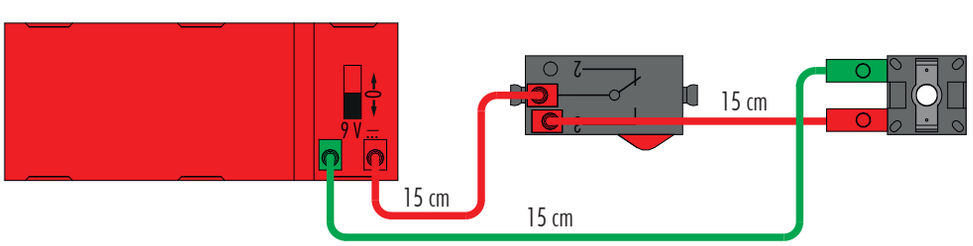

Linsenlampe
Lens tip lamp
Ampoule lentille
Lenslampje
Lampada lenticolare
Lâmpada de formato lenticular
Lampada lenticolare
Лампа с линзой
透镜灯

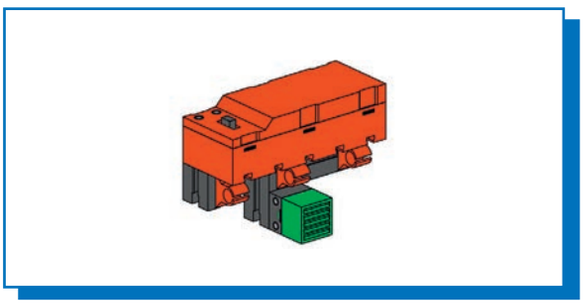

Durchgangsprüfer
Continuity tester
Contrôleur de continuité

Ohmmeter
Probador de continuidad
Dispositivo de teste de continuidade

Misuratore di continuità
Тестер
断路检测仪

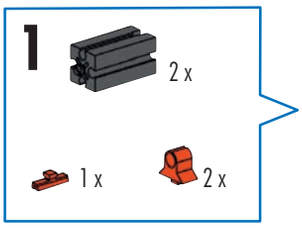

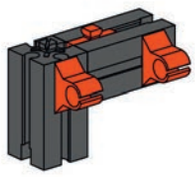

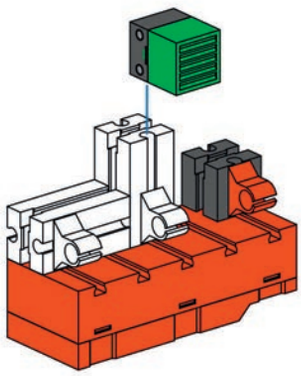

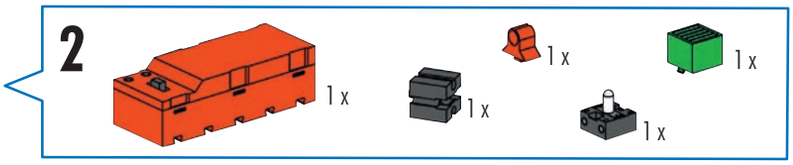

Linsenlampe
Lens tip lamp
Ampoule lentille
Lenslampje
Lampada lenticolare
Lâmpada de formato lenticular
Lampada lenticolare
Лампа с линзой
透镜灯

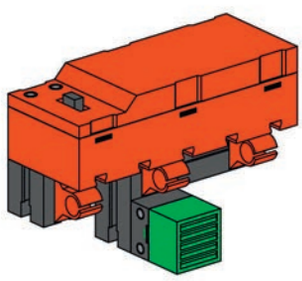

Schaltplan
Circuit diagram
Plan électrique

Schakelschema
Diagrama de circuitos
Plano elétrico de ligação

Schema elettrico
Схема подключения
电路图

Linsenlampe
Lens tip lamp
Ampoule lentille
Lenslampje
Lampada lenticolare
Lâmpada de formato lenticular
Lampada lenticolare
Лампа с линзой
透镜灯

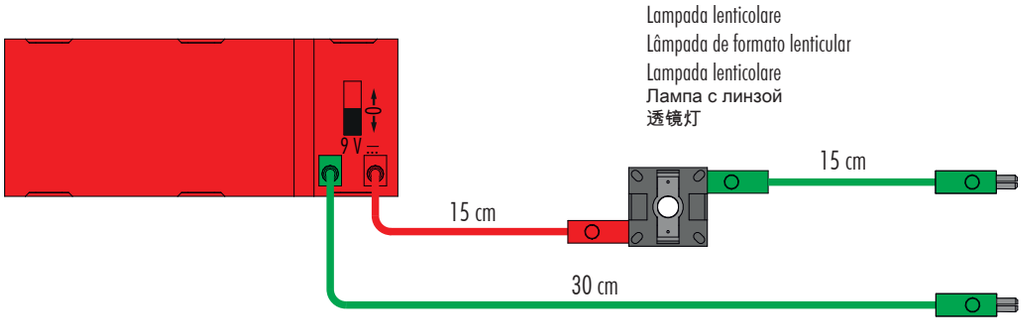

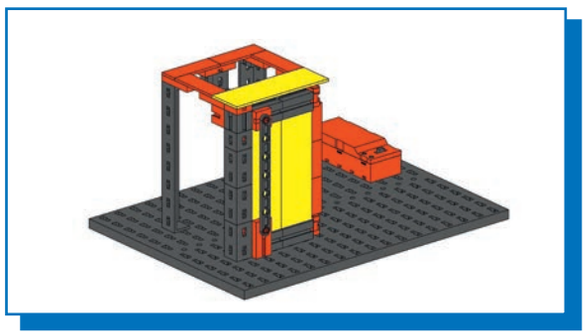

Kühlschrankbeleuchtung
Refrigerator light
Éclairage d'un réfrigérateur
Koelkastverlichting
Iluminación de refrigerador
Iluminação de refrigerador
Illuminazione frigorifero
Освещение холодильника
冰箱照明灯

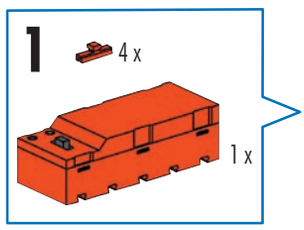

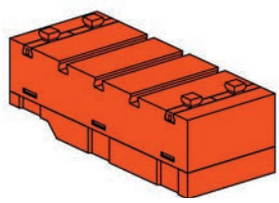

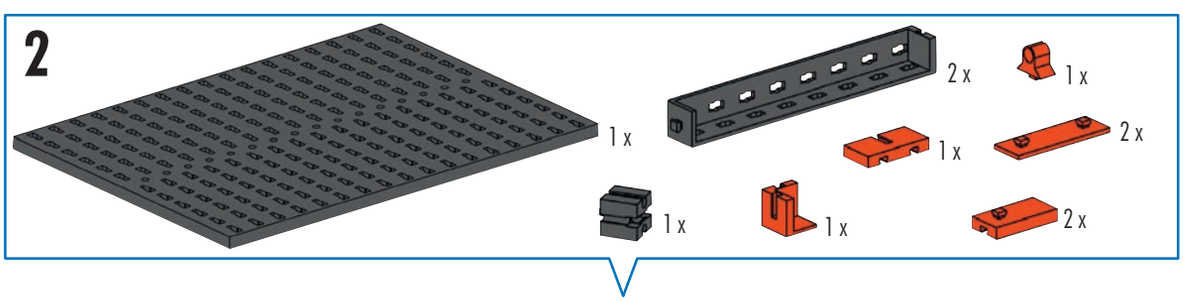

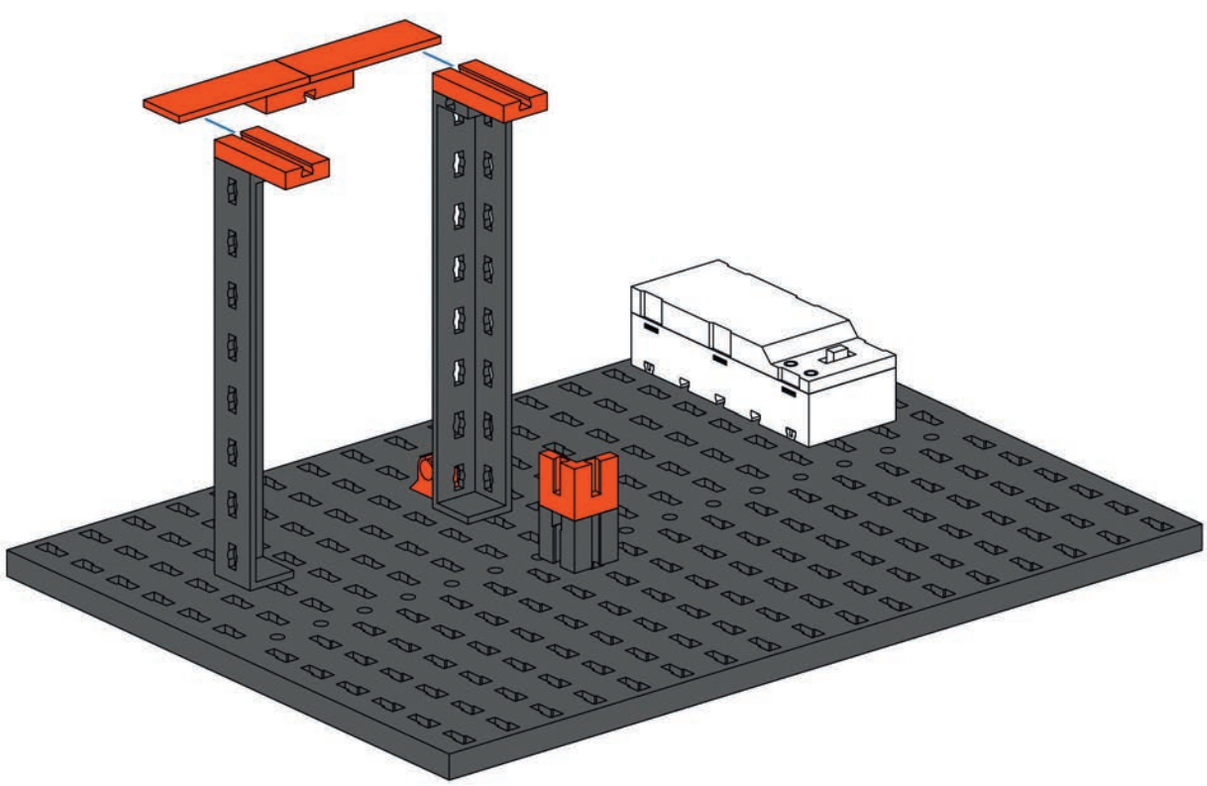

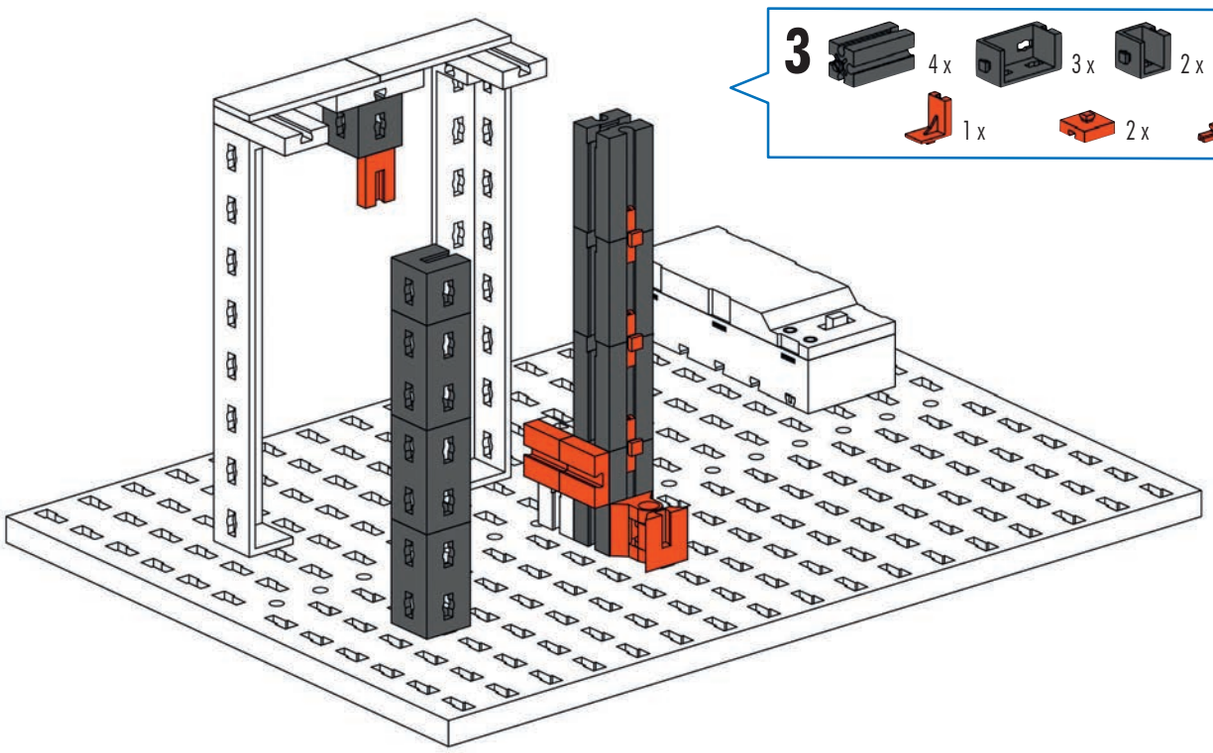

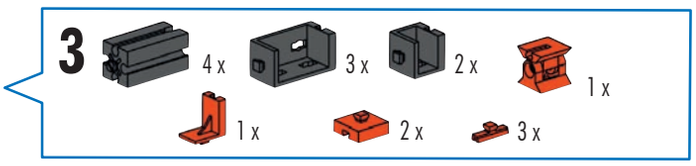

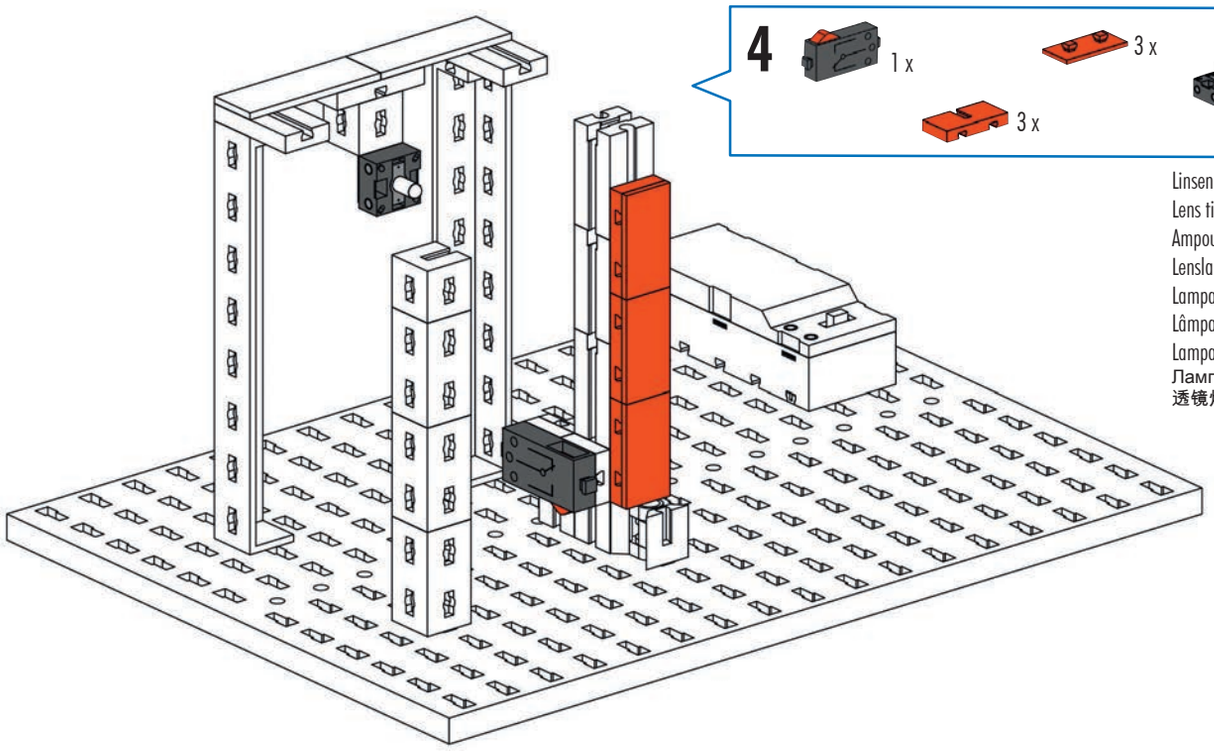

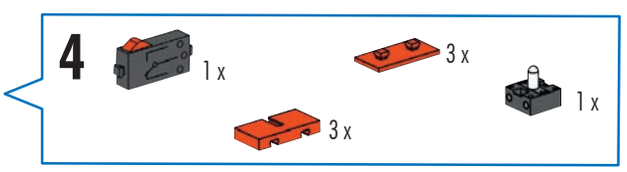

Linsenlampe
Lens tip lamp
Ampoule lentille
Lenslampje
Lampada lenticolare
Lâmpada de formato lenticular
Lampada lenticolare
Лампа с линзой
透镜灯

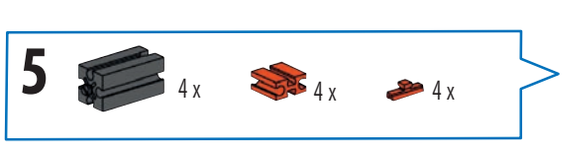

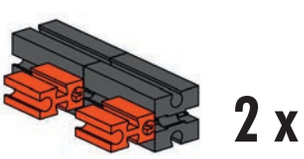

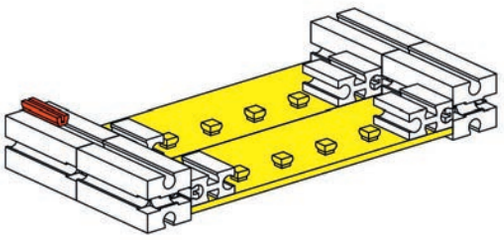

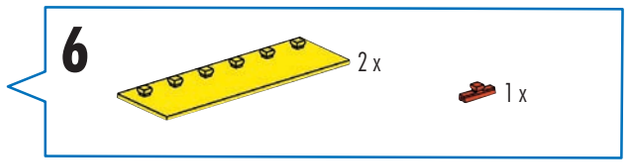
6
2 x
1 x

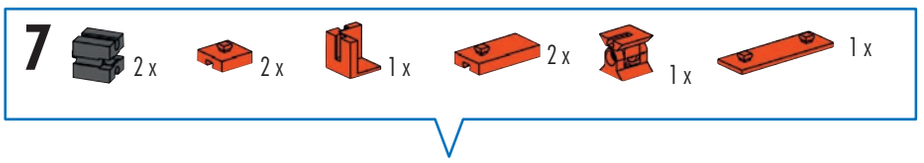
7
2 x
2 x
1 x
2 x
1 x
1 x

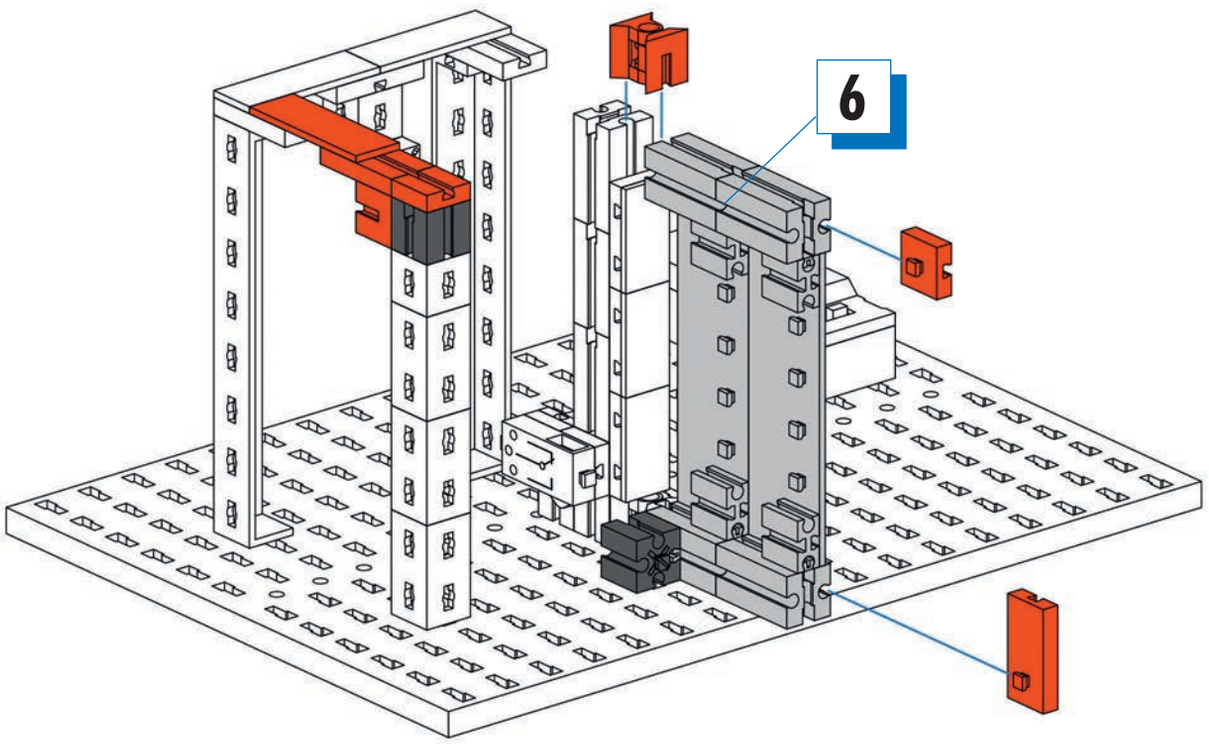
6

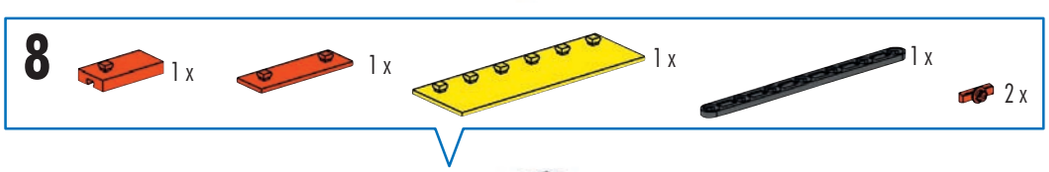
8
1 x
1 x
1 x
1 x
2 x

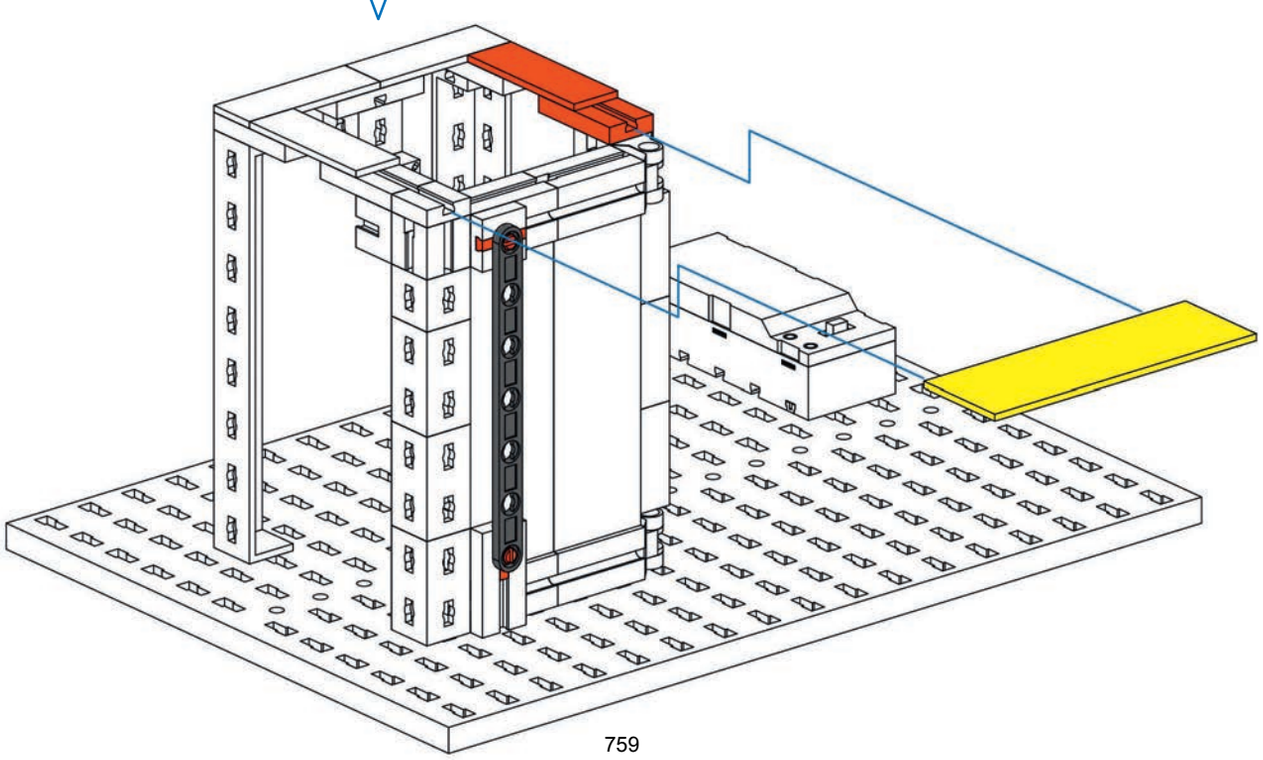

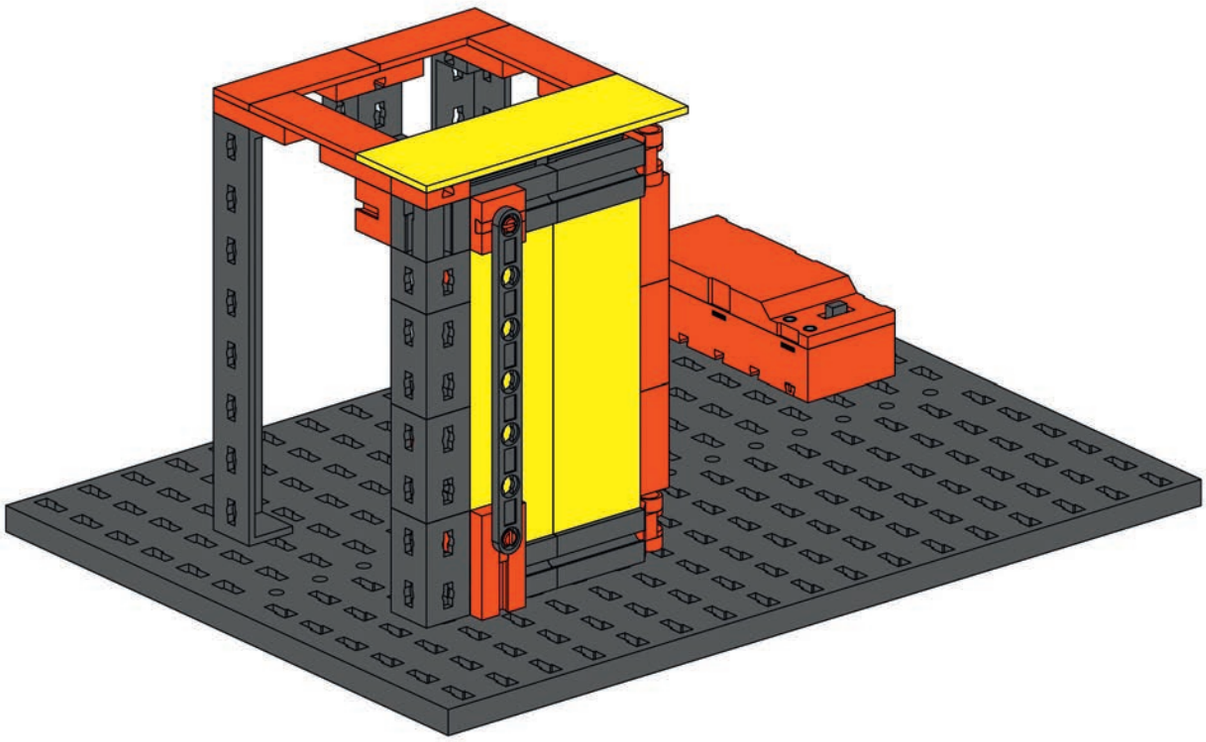

Schaltplan
Circuit diagram
Plan électrique

Schakelschema
Diagrama de circuitos
Plano elétrico de ligação

Schema elettrico
Схема подключения
电路图

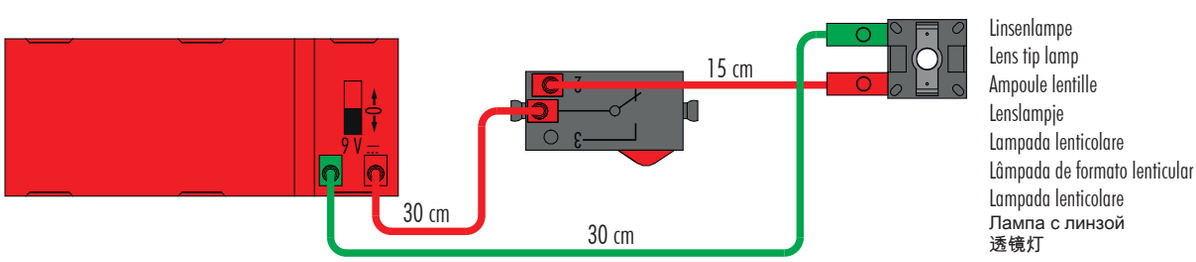

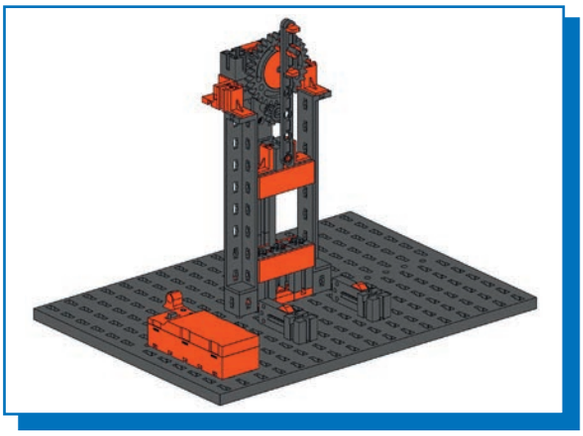

Stanze
Punch
Estampe
Stansmachine
Punzonadora
Punção
Pressa per coniare
Высечной пресс
冲床

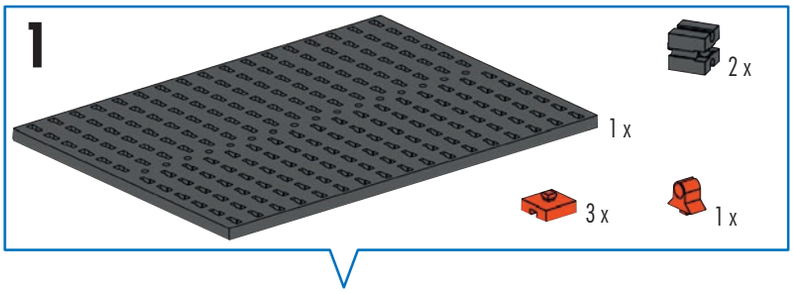

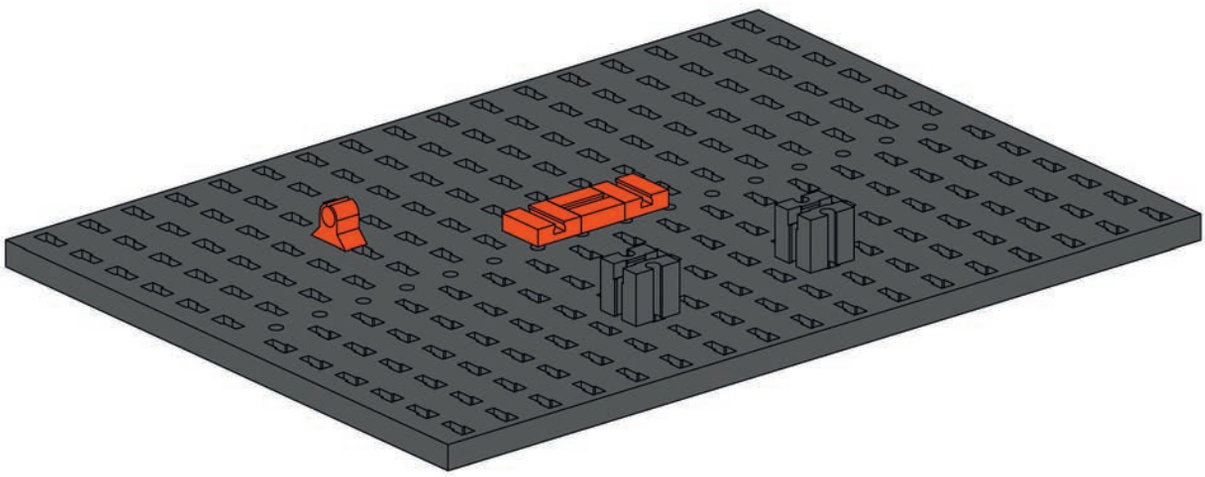

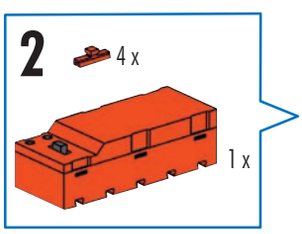

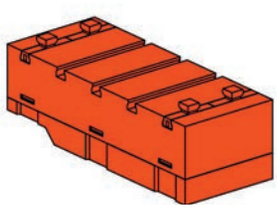

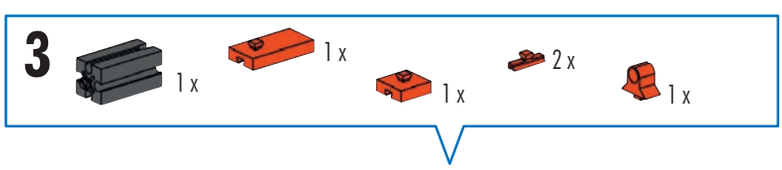

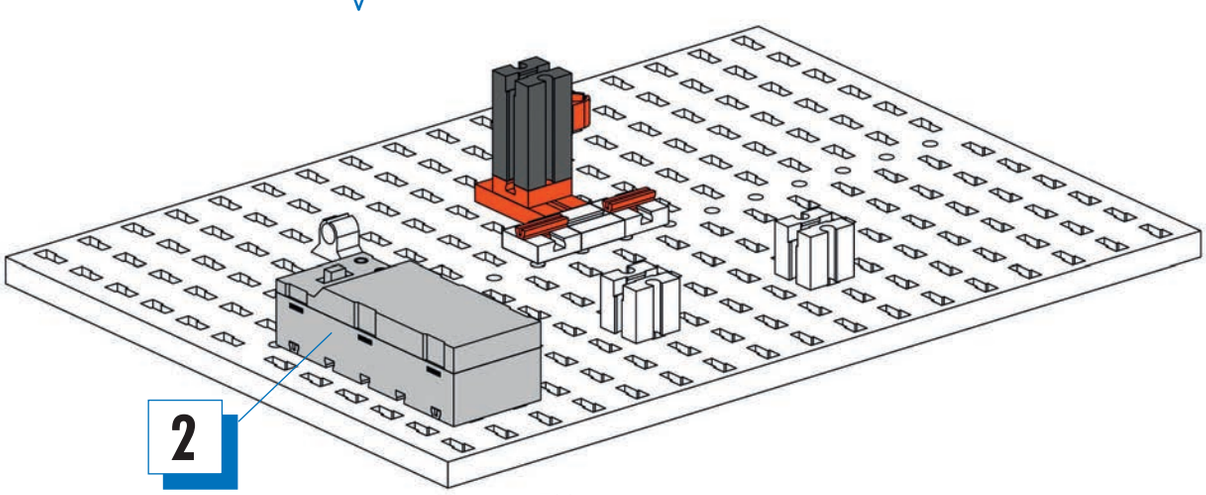

761

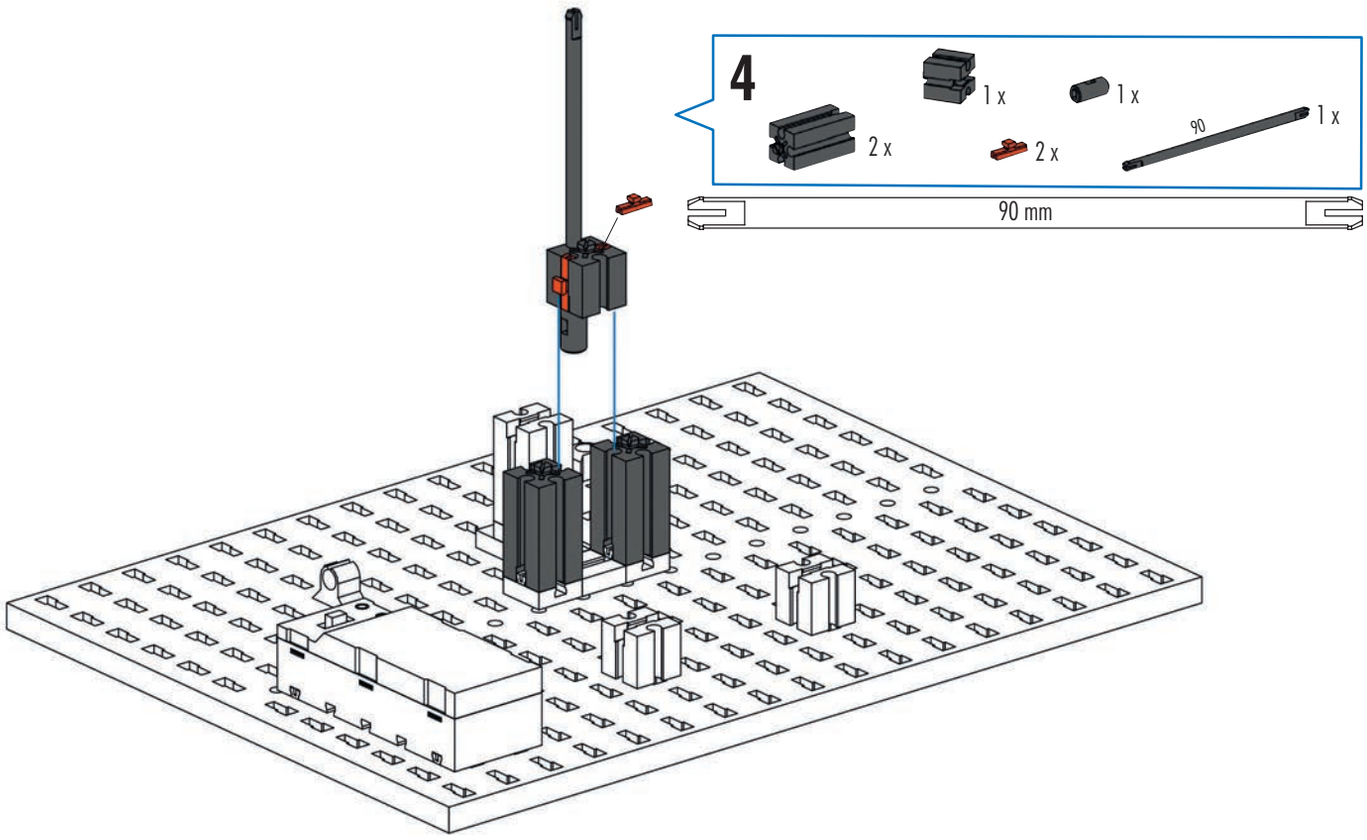
4
1 x
1 x
2 x
2 x
90
1 x
90 mm

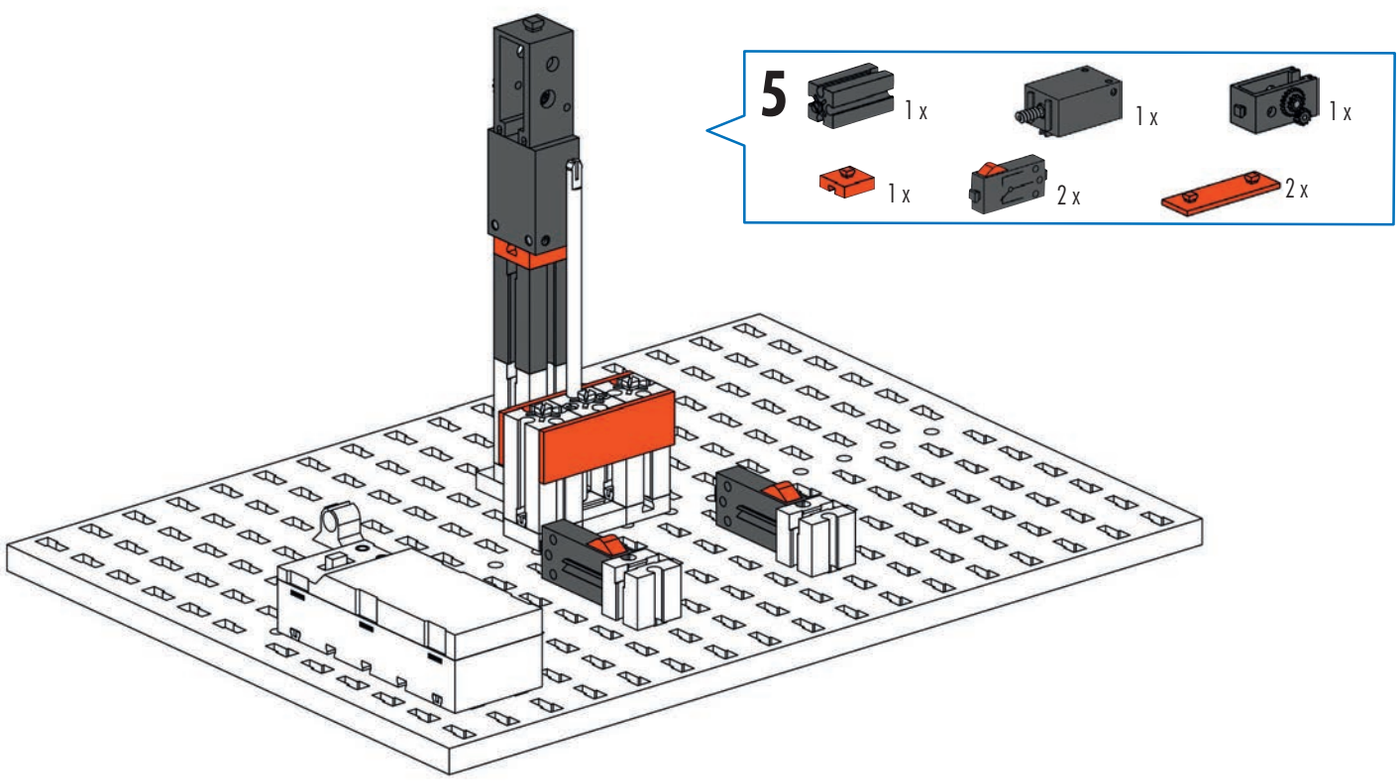
5
1 x
1 x
1 x
1 x
2 x
2 x

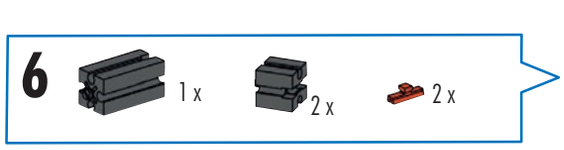
6
1 x
2 x
2 x

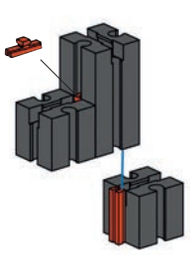

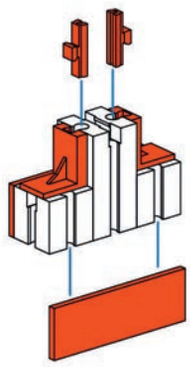

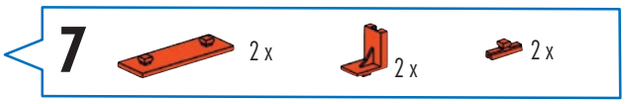
7
2 x
2 x
2 x

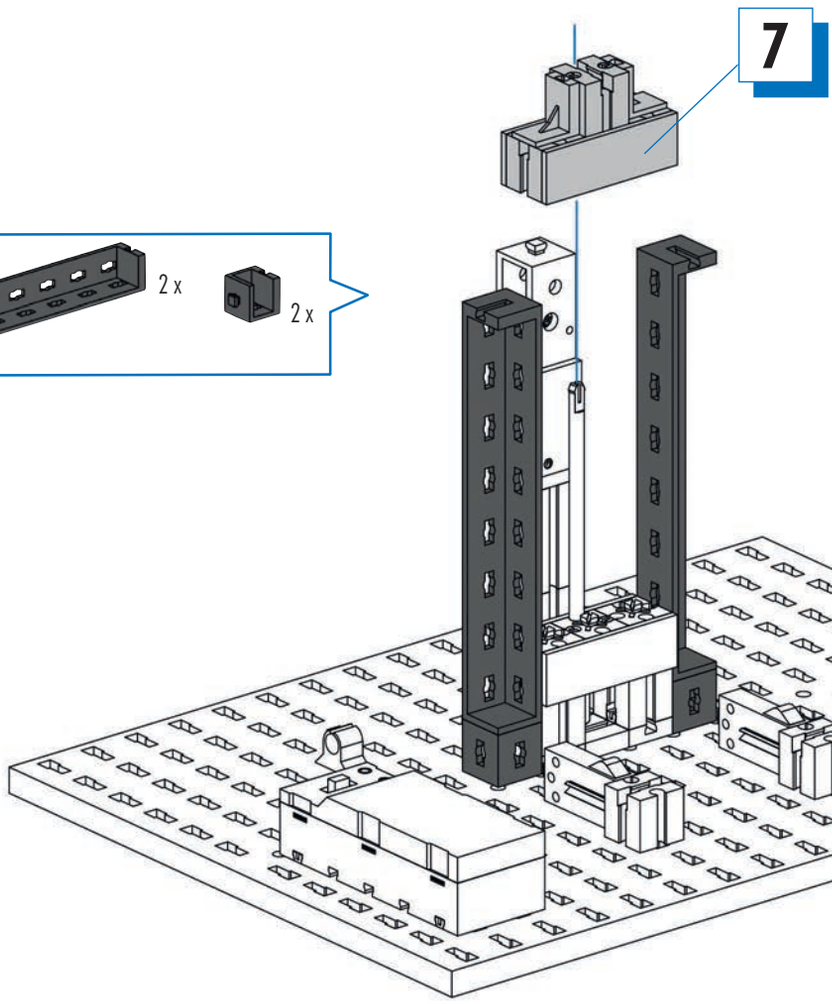
7

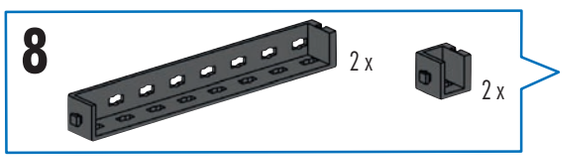
8
2 x
2 x

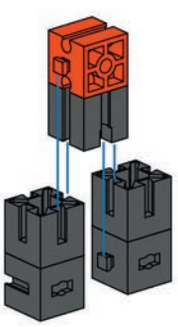

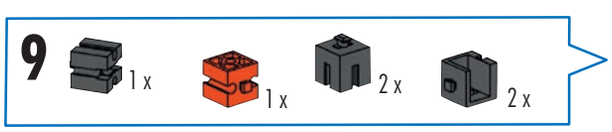
9
1 x
1 x
2 x
2 x

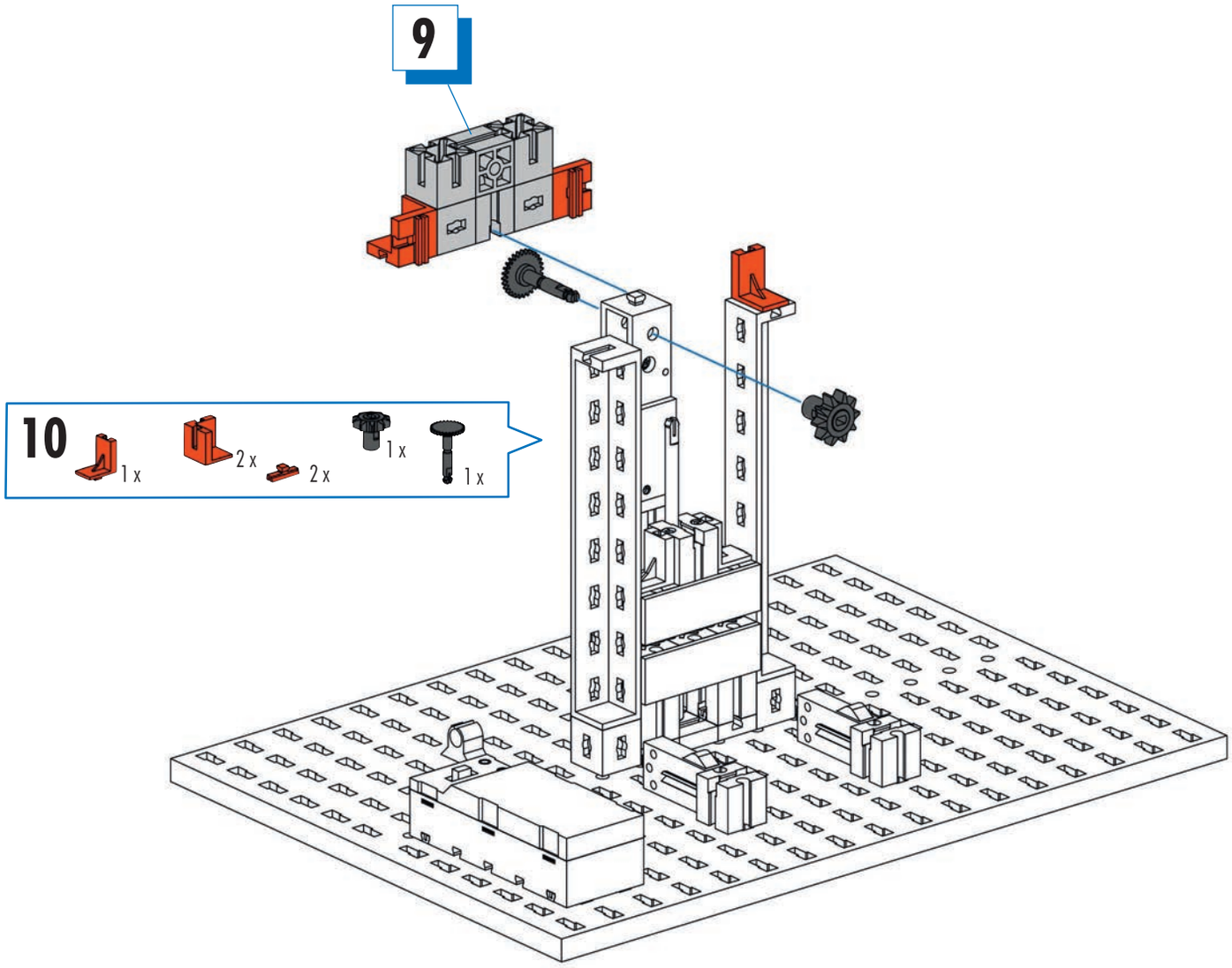

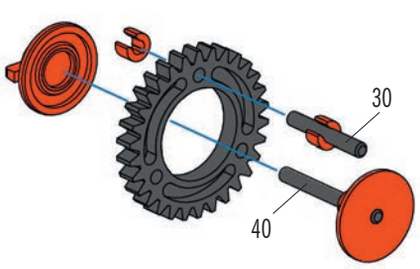

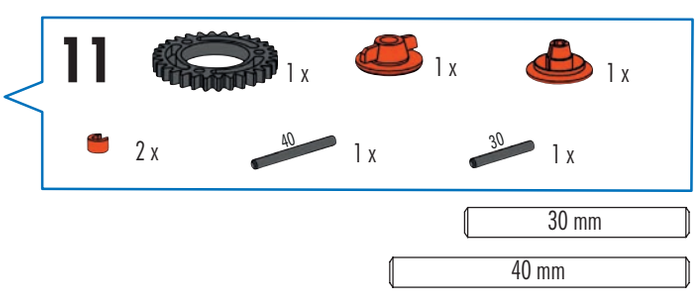

30 mm

40 mm

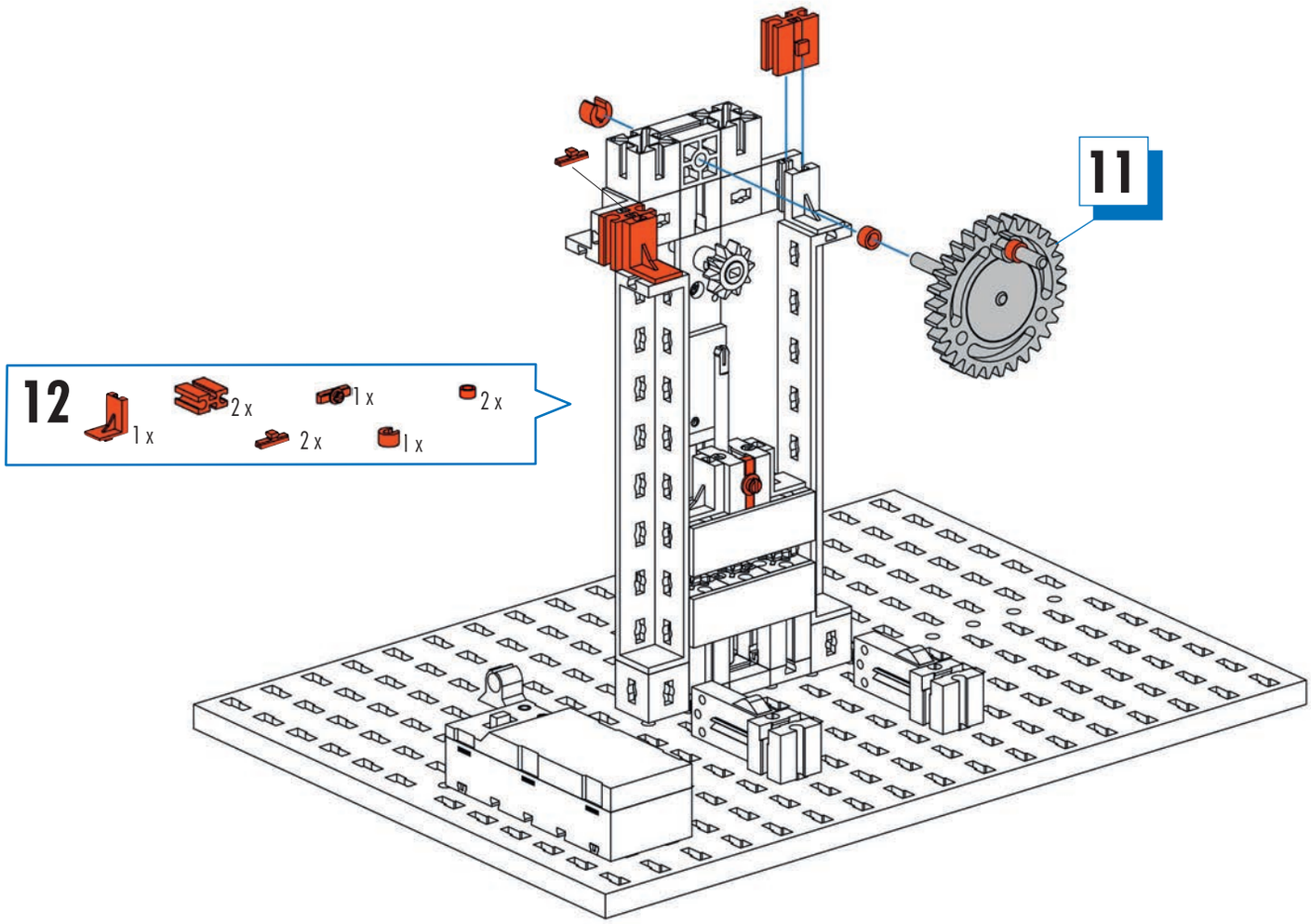
11
12
1 x
2 x
1 x
2 x
2 x
1 x

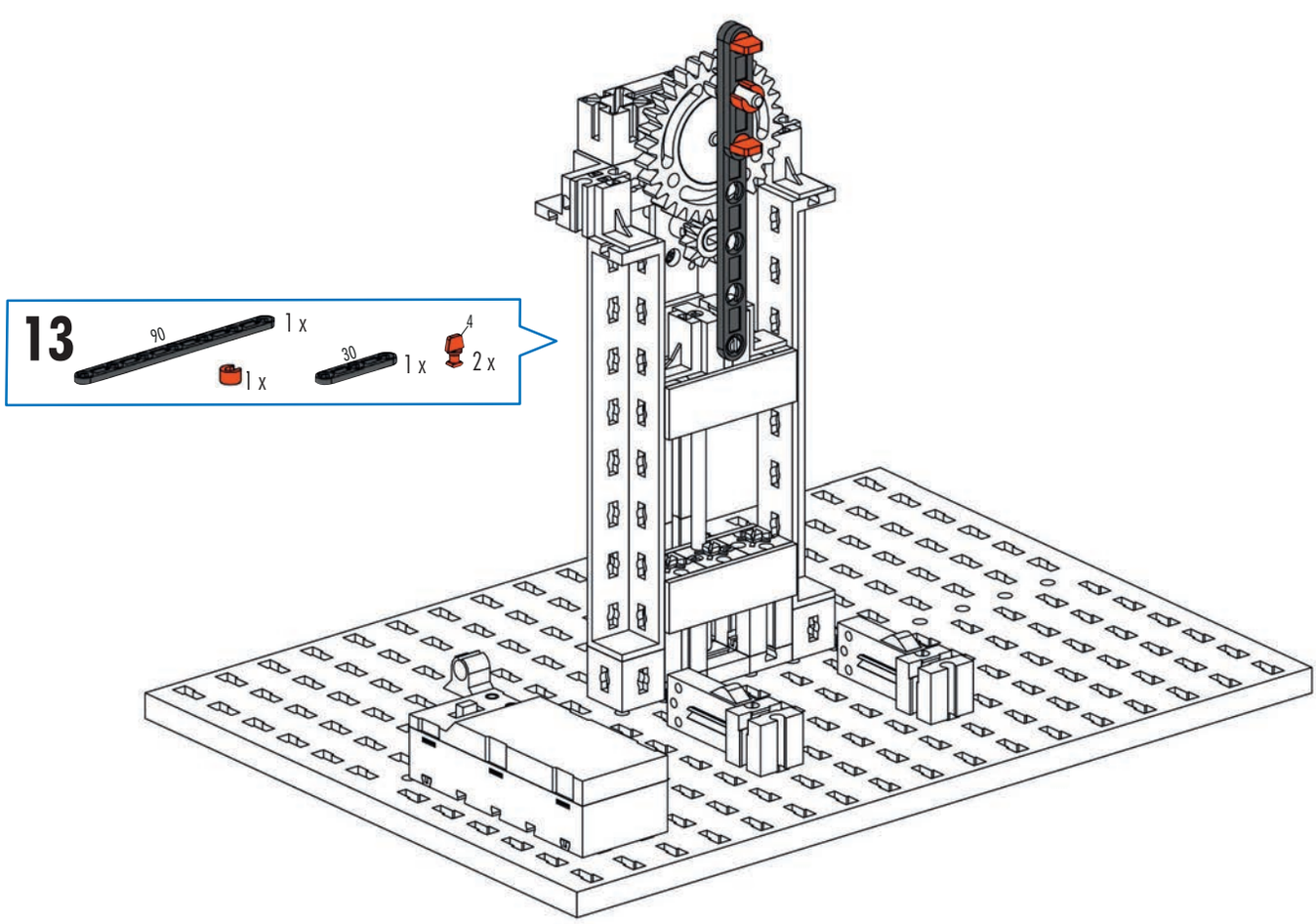
13
90
1 x
1 x
30
1 x
4
2 x

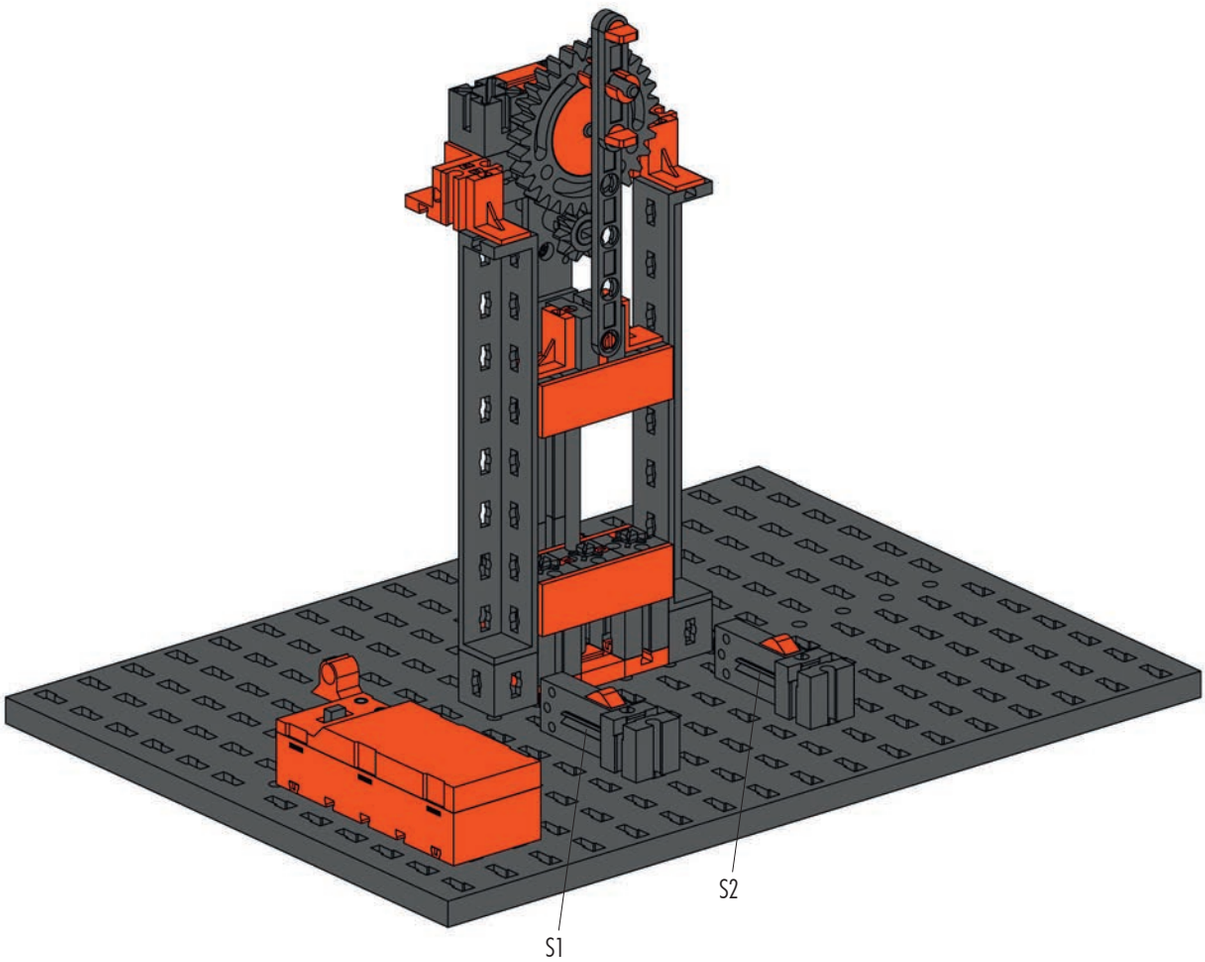

Schaltplan
Circuit diagram
Plan électrique

Schakelschema
Diagrama de circuitos
Plano elétrico de ligação

Schema elettrico
Схема подключения
电路图

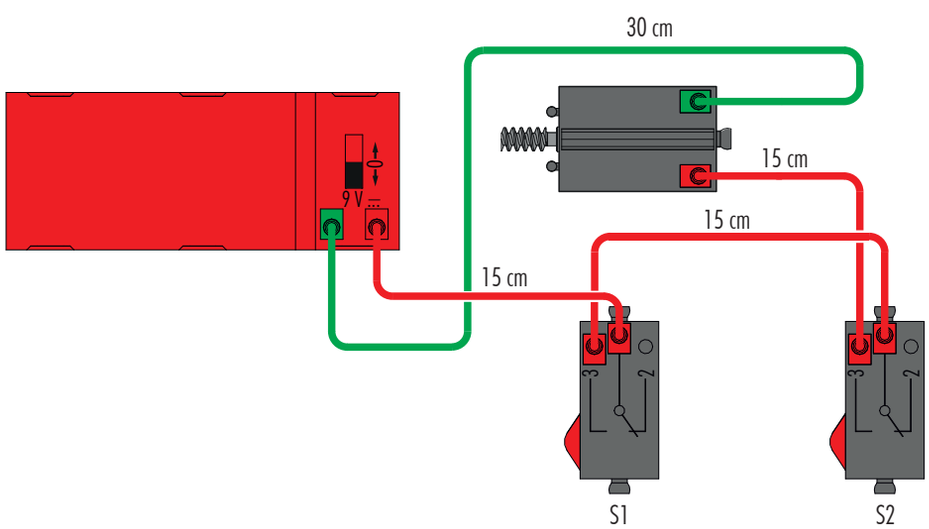

766

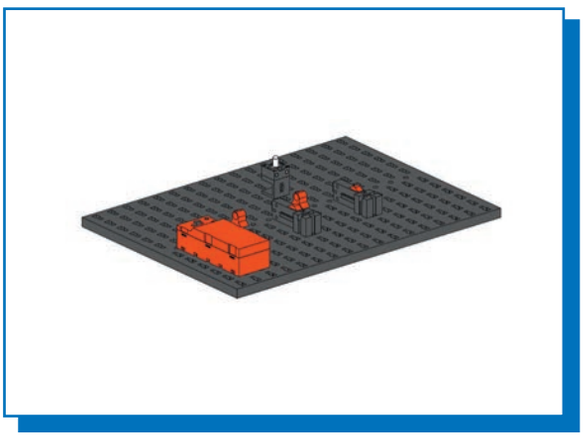

Parallelschaltung
Parallel connection
Montage parallèle

Parallelschakeling
Conexión en paralelo
Conexão em paralelo

Collegamento in parallelo
Параллельное соединение
并联

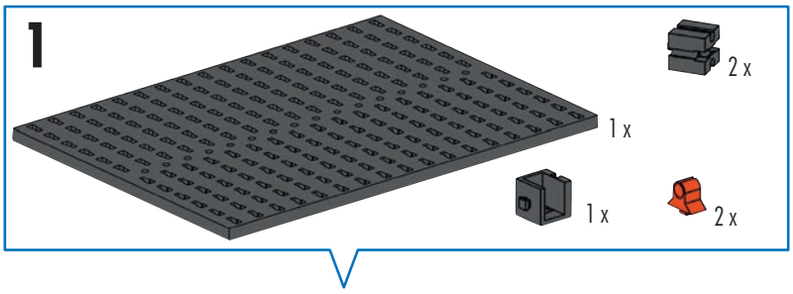

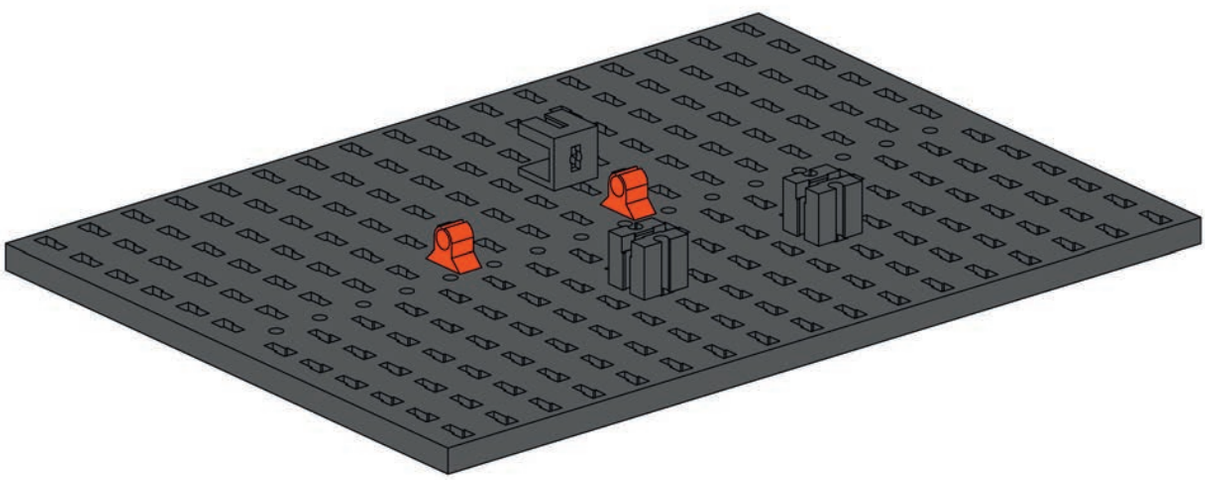

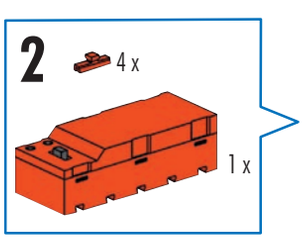

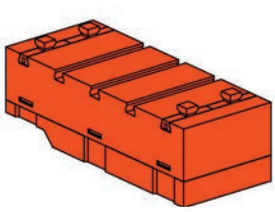

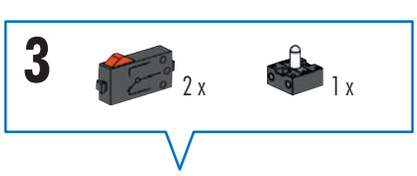

Linsenlampe
Lens tip lamp
Ampoule lentille
Lenslampje
Lampada lenticolare
Lâmpada de formato lenticular
Lampada lenticolare
Лампа с линзой
透镜灯

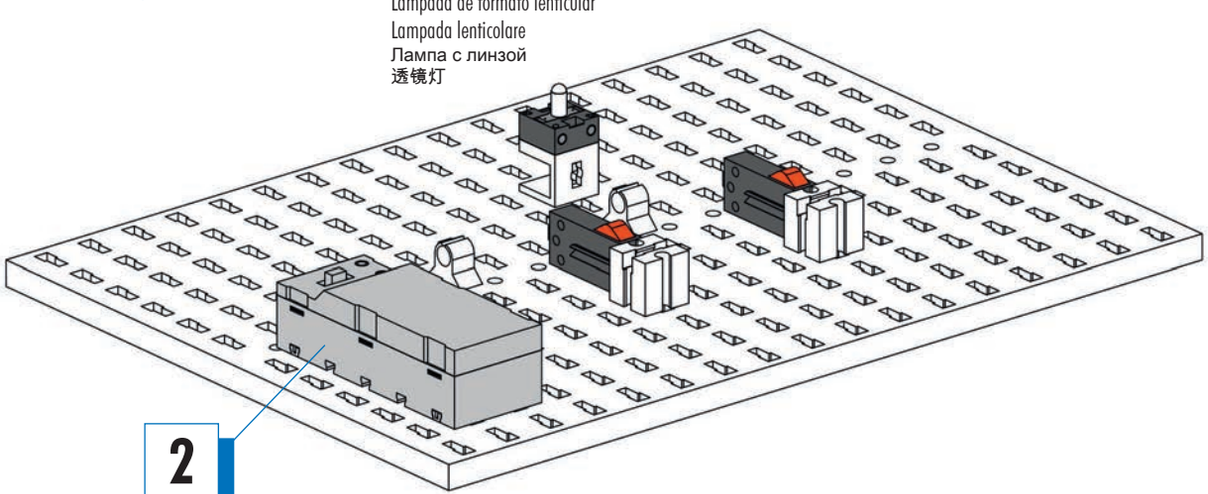

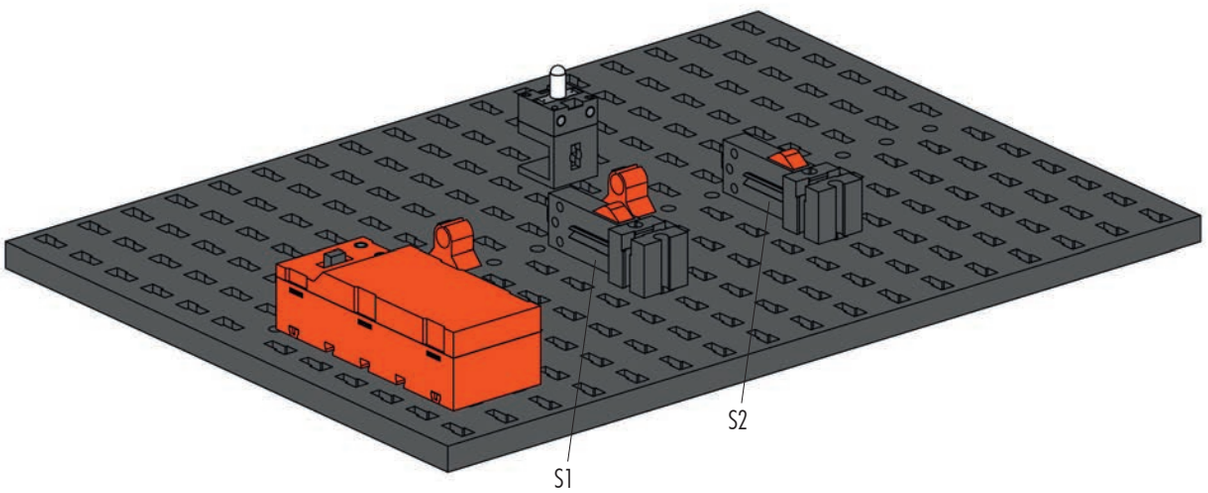

Schaltplan
Circuit diagram
Plan électrique

Schakelschema
Diagrama de circuitos
Plano elétrico de ligação

Schema elettrico
Схема подключения
电路图

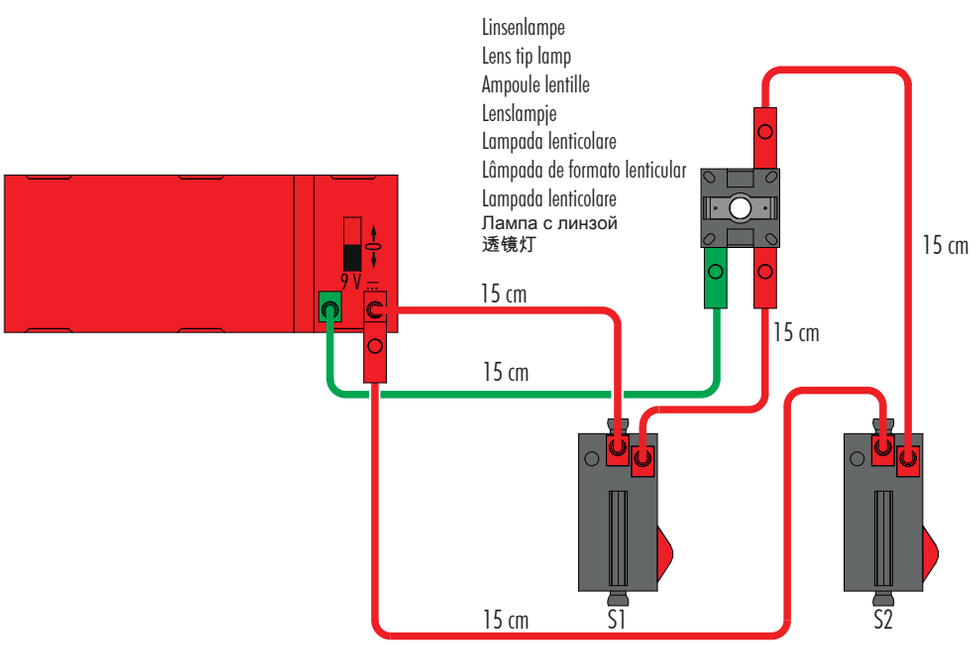

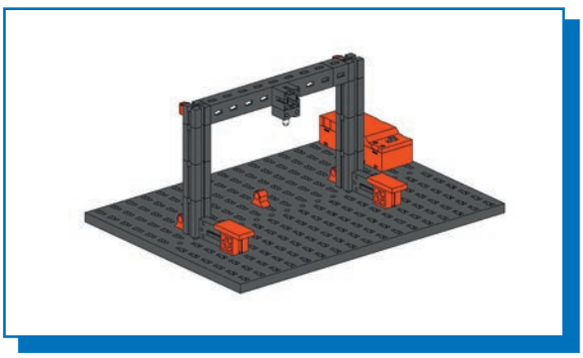

Flurbeleuchtung
Hallway lighting
Éclairage d'un couloir

Vloerverlichting
Iluminación se pasillo
Iluminação de corredor

Illuminazione corridoio
Освещение коридора
走廊照明灯

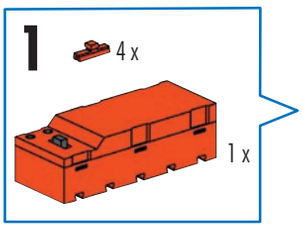

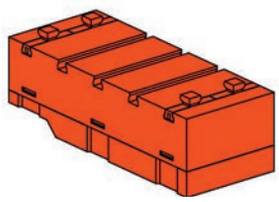

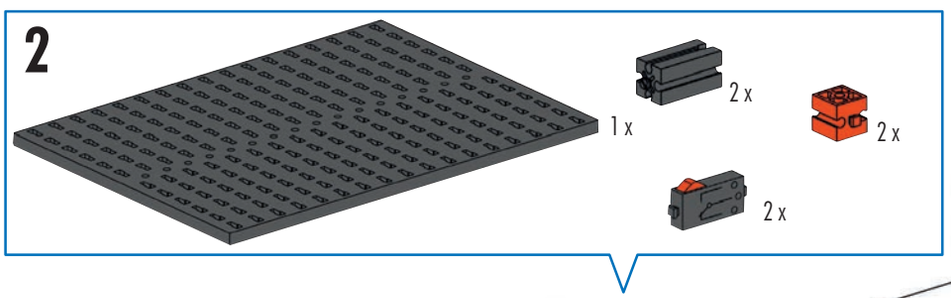

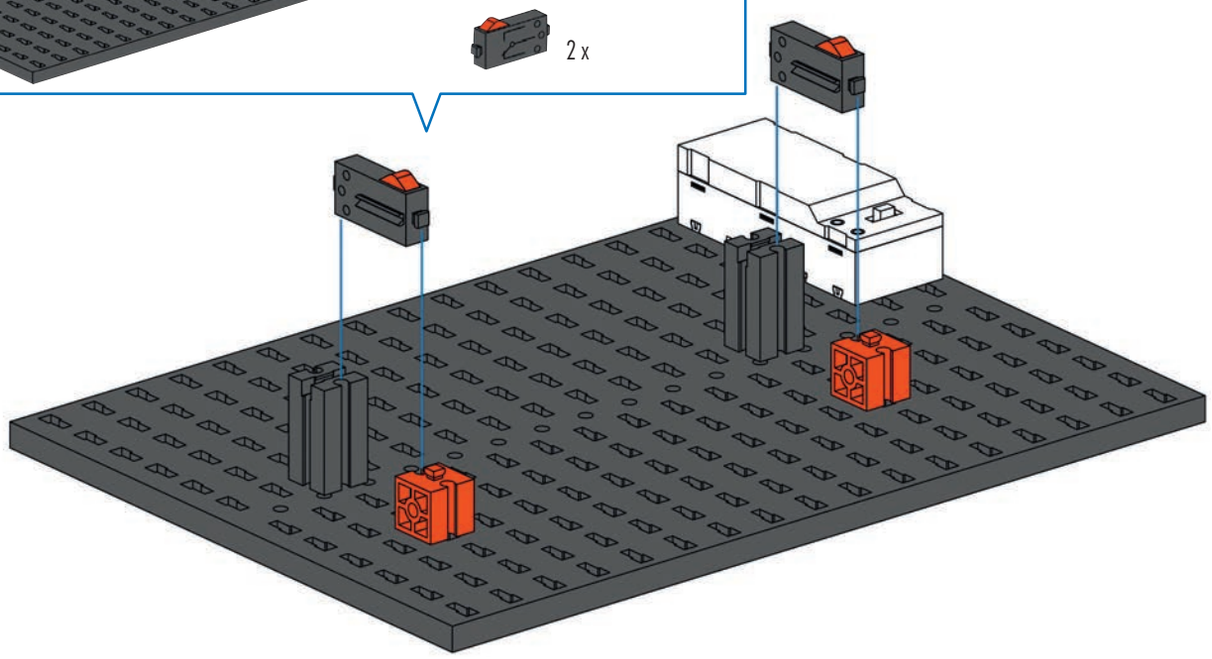

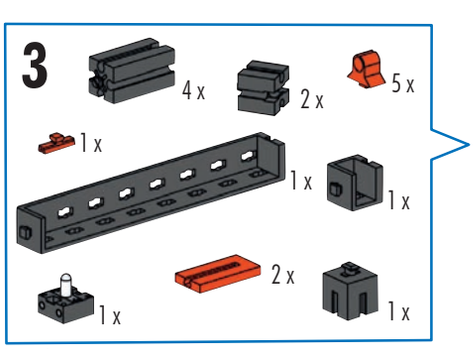

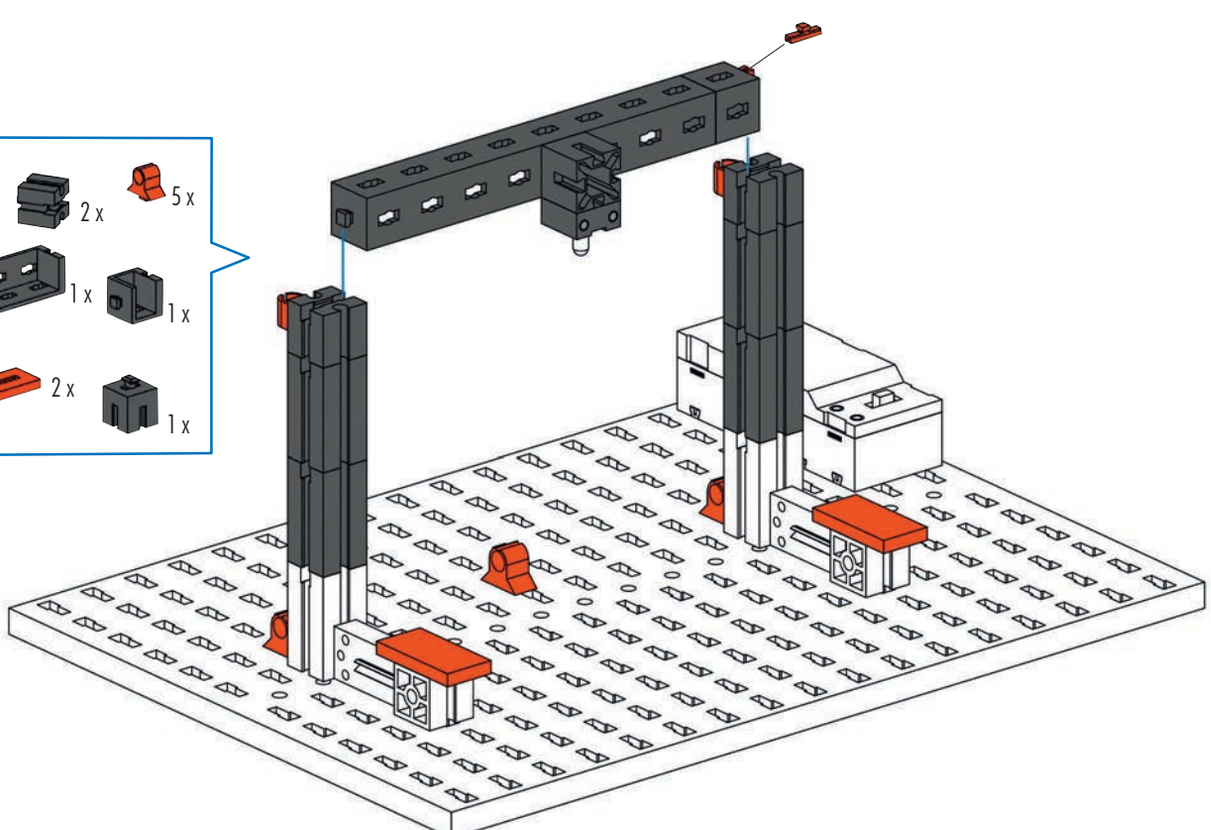

Linsenlampe
Lens tip lamp
Ampoule lentille
Lenslampje
Lampada lenticolare
Lâmpada de formato lenticular
Lampada lenticolare
Лампа с линзой
透镜灯

769

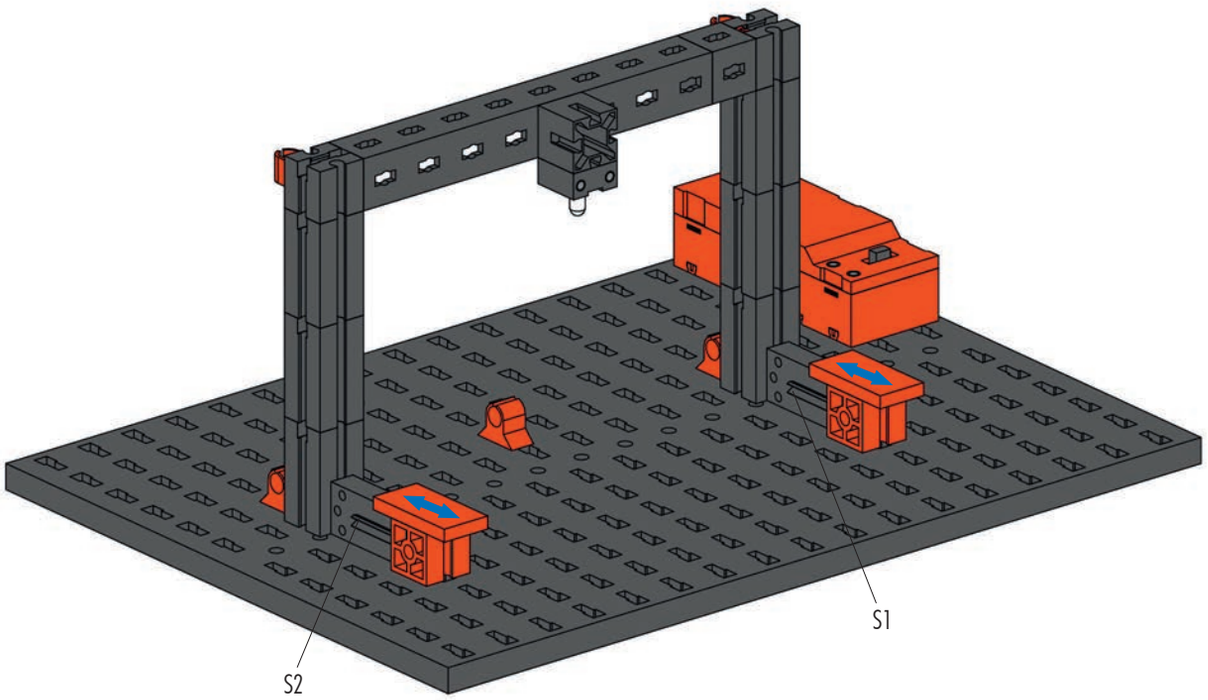

Schaltplan
Circuit diagram
Plan électrique

Schakelschema
Diagrama de circuitos
Plano elétrico de ligação

Schema elettrico
Схема подключения
电路图

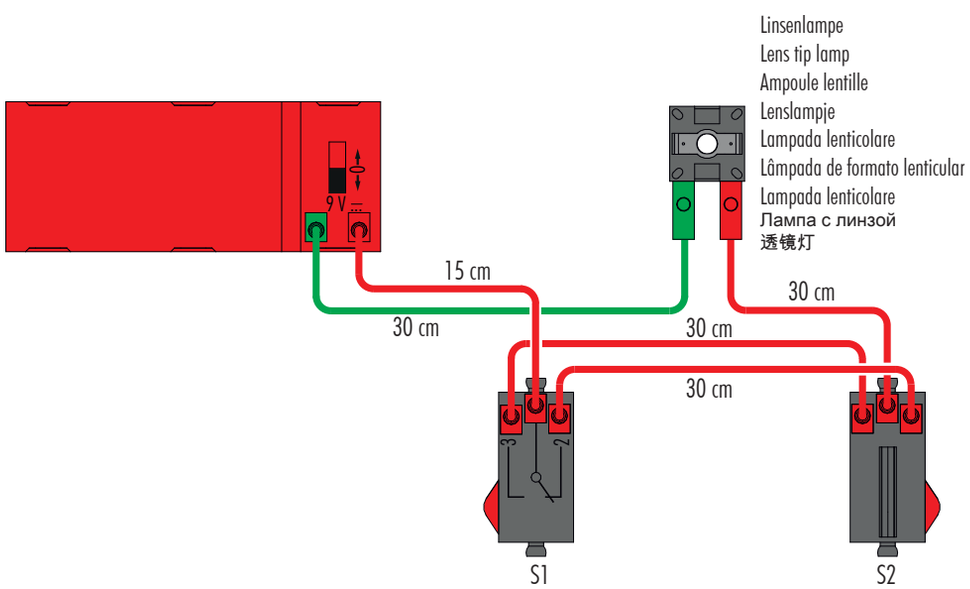

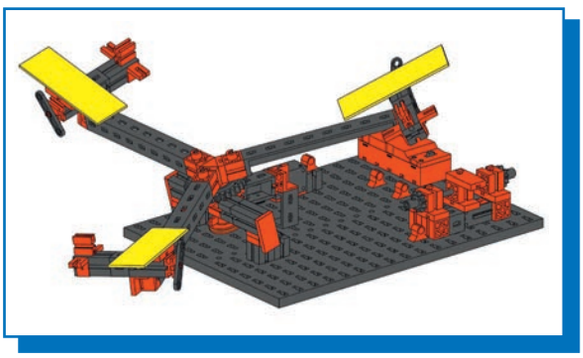

Karussell mit Polwendeschalter
Merry-go-round with pole reversing switch
Manège avec commutateur de polarité
Draaimolen met poolomkeerschakelaar
Tiovivo con interruptor conmutador de polos
Carrossel com comutador
Giostra con invertitore di polarità
Карусель с переключателем полюсов
配备极性转换开关的旋转木马

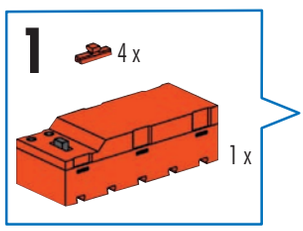

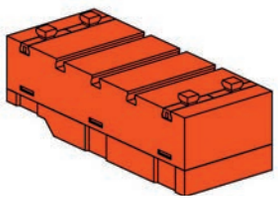

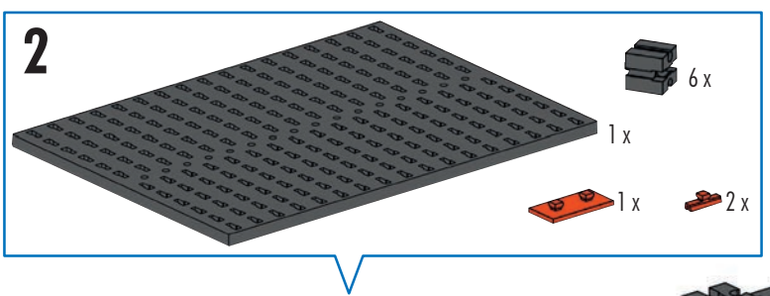

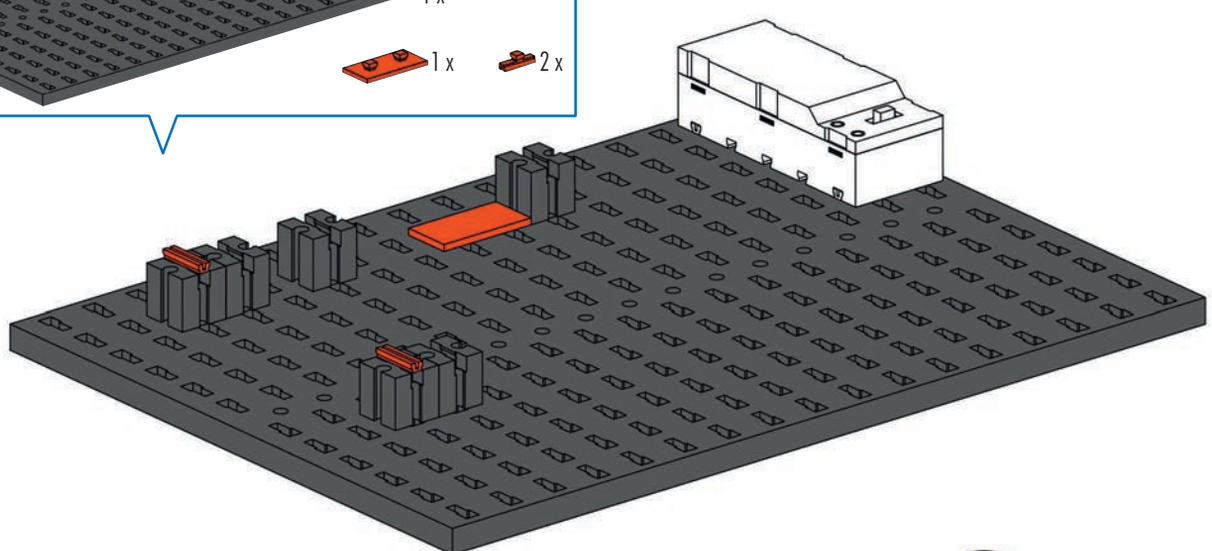

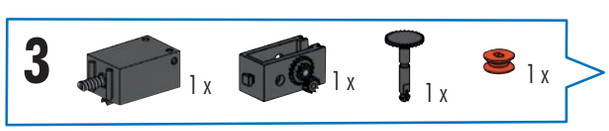

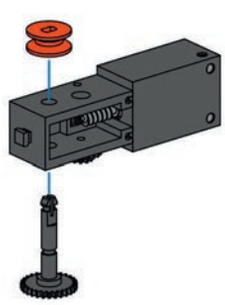

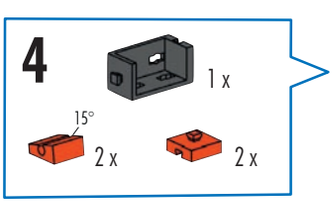

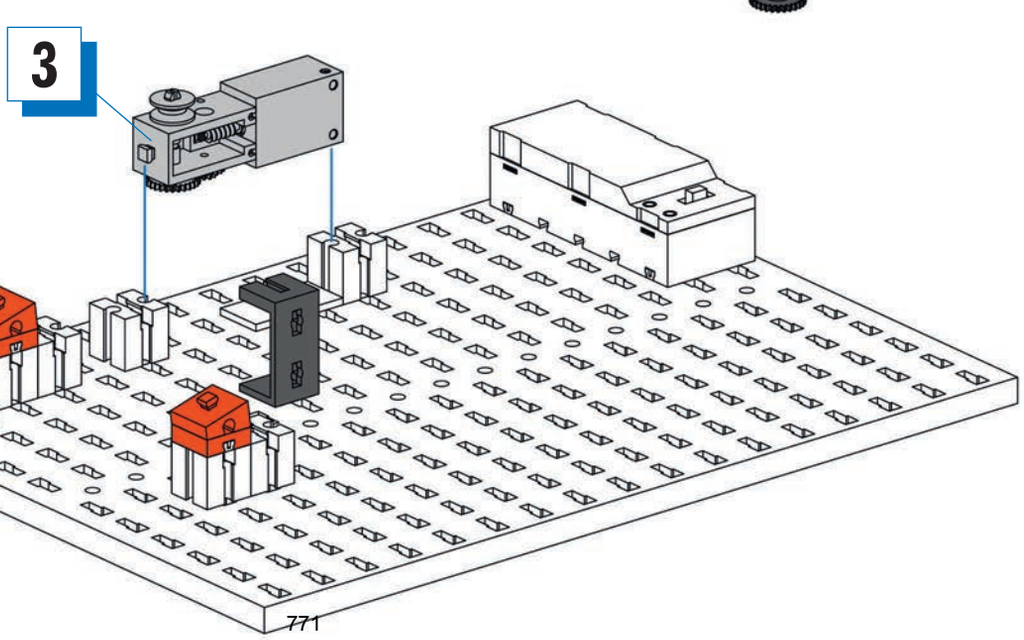

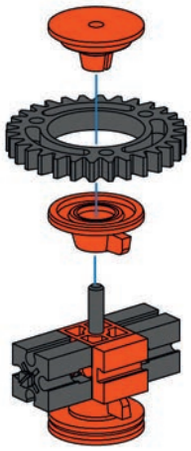

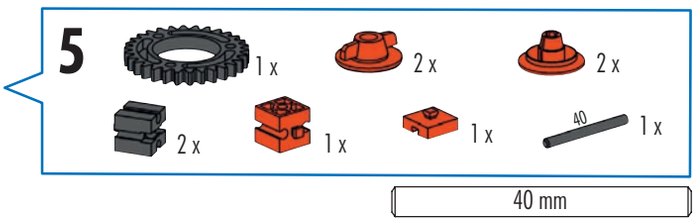
5
1 x
2 x
2 x
2 x
1 x
1 x
40
1 x
40 mm

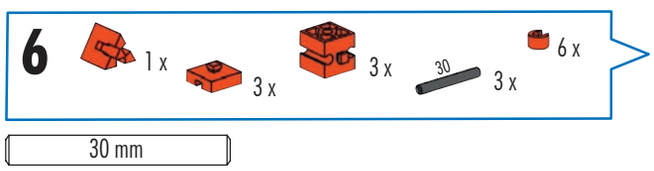
6
1 x
3 x
3 x
30
3 x
6 x
30 mm

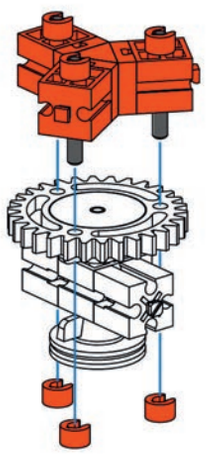

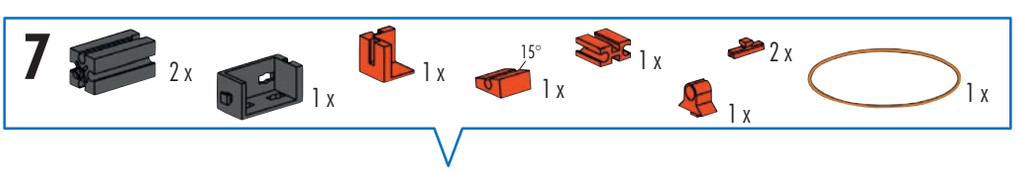
7
2 x
1 x
1 x
15°
1 x
1 x
2 x
1 x
1 x

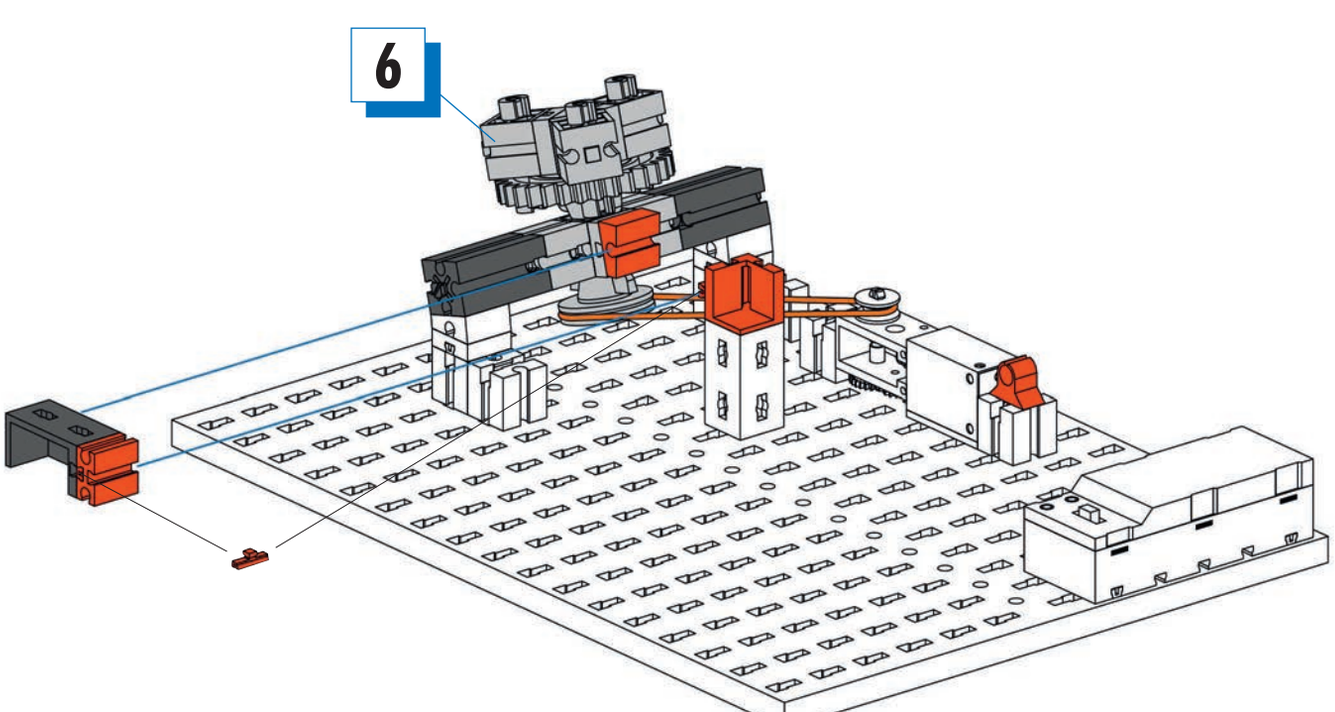
6

772

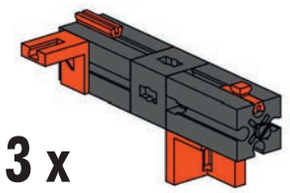

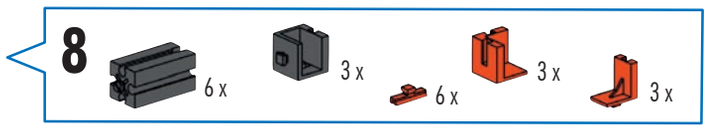

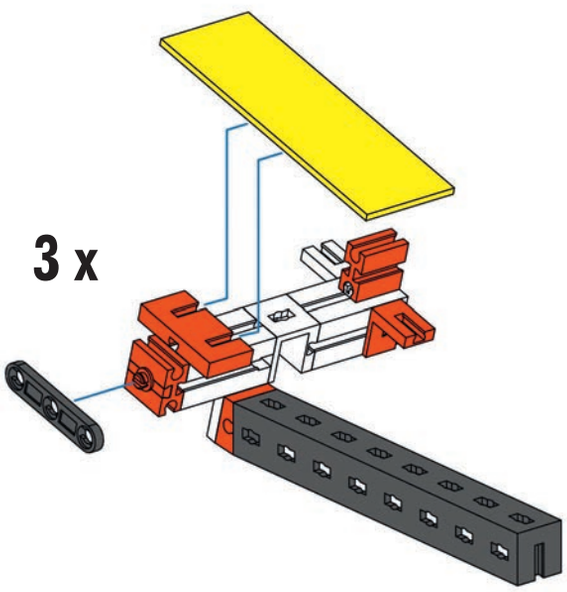

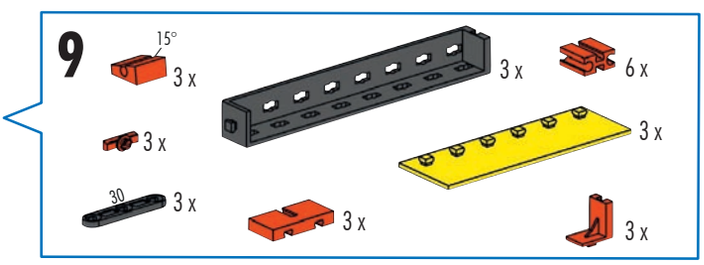

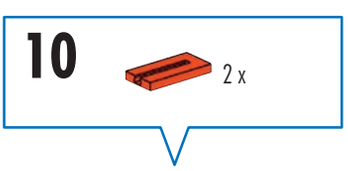

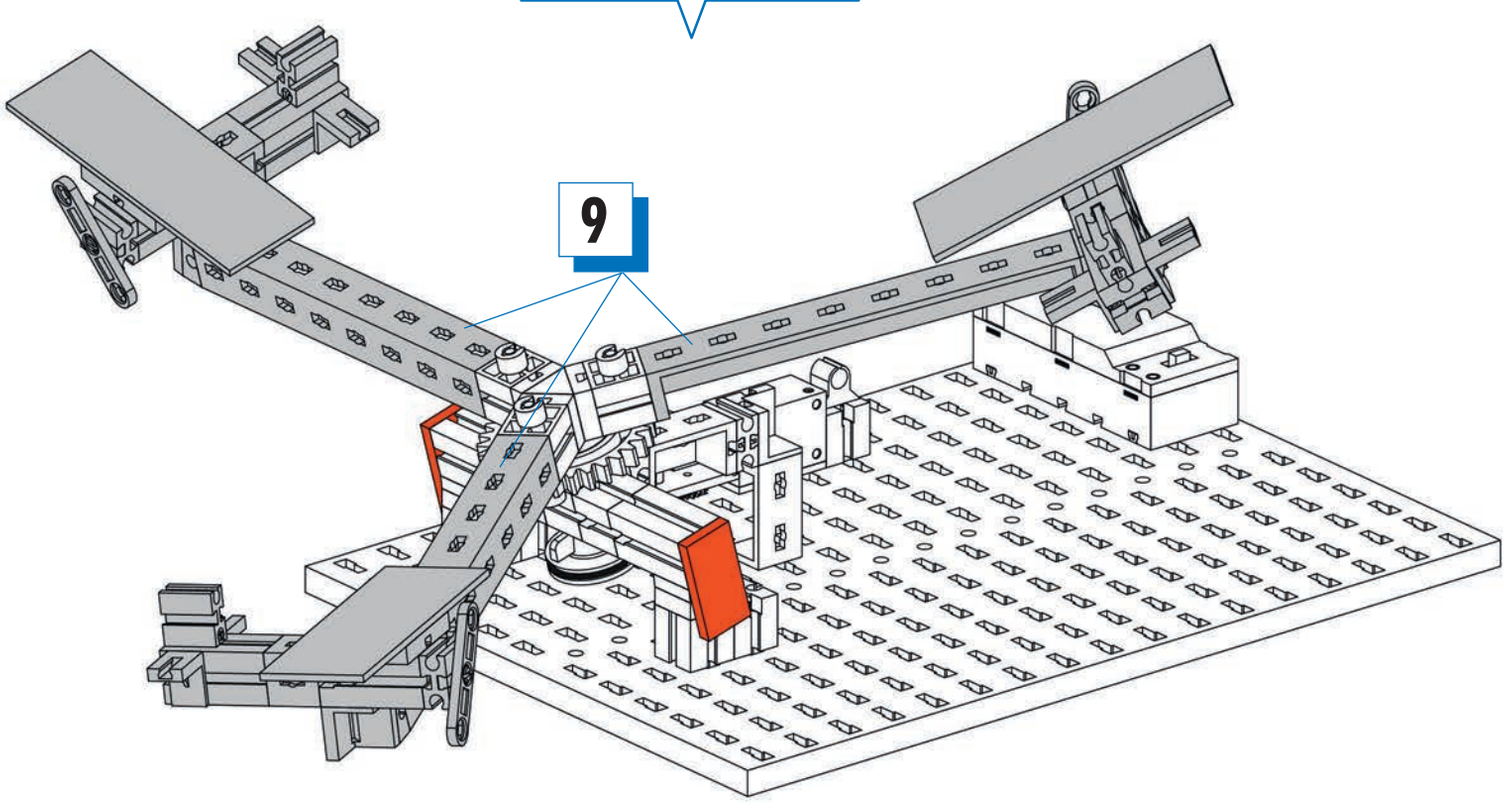

773

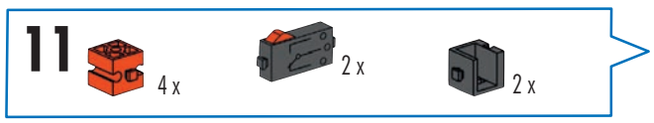

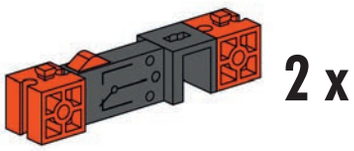

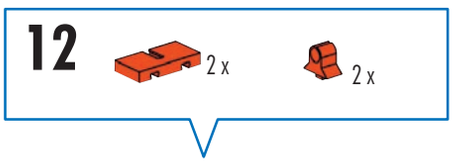

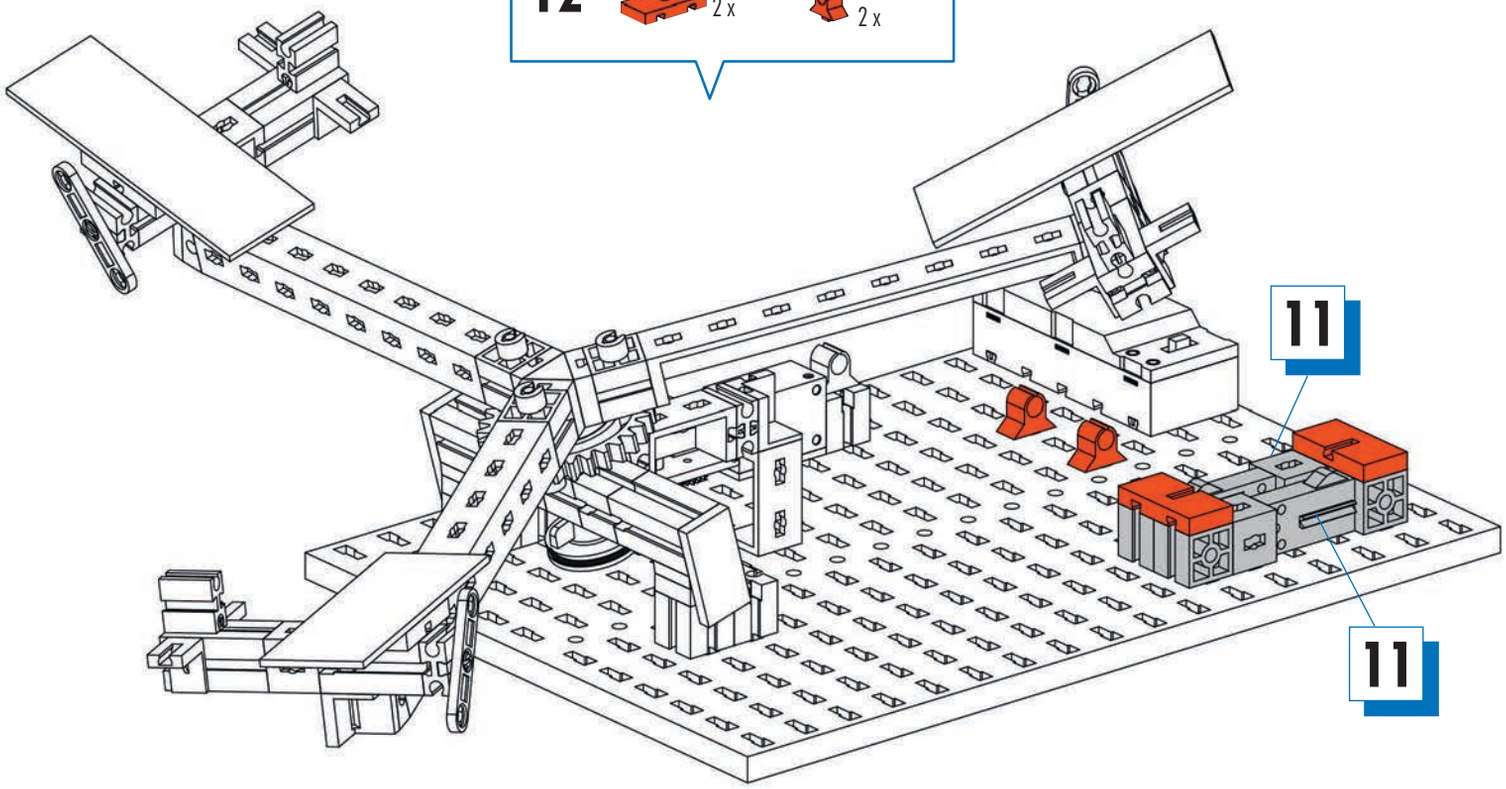

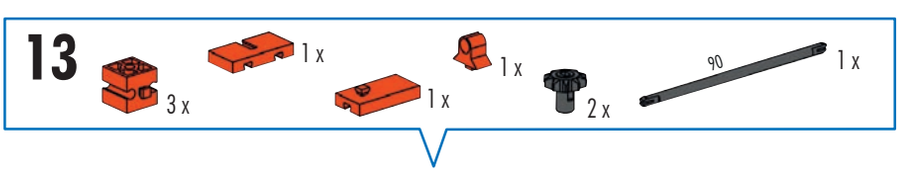

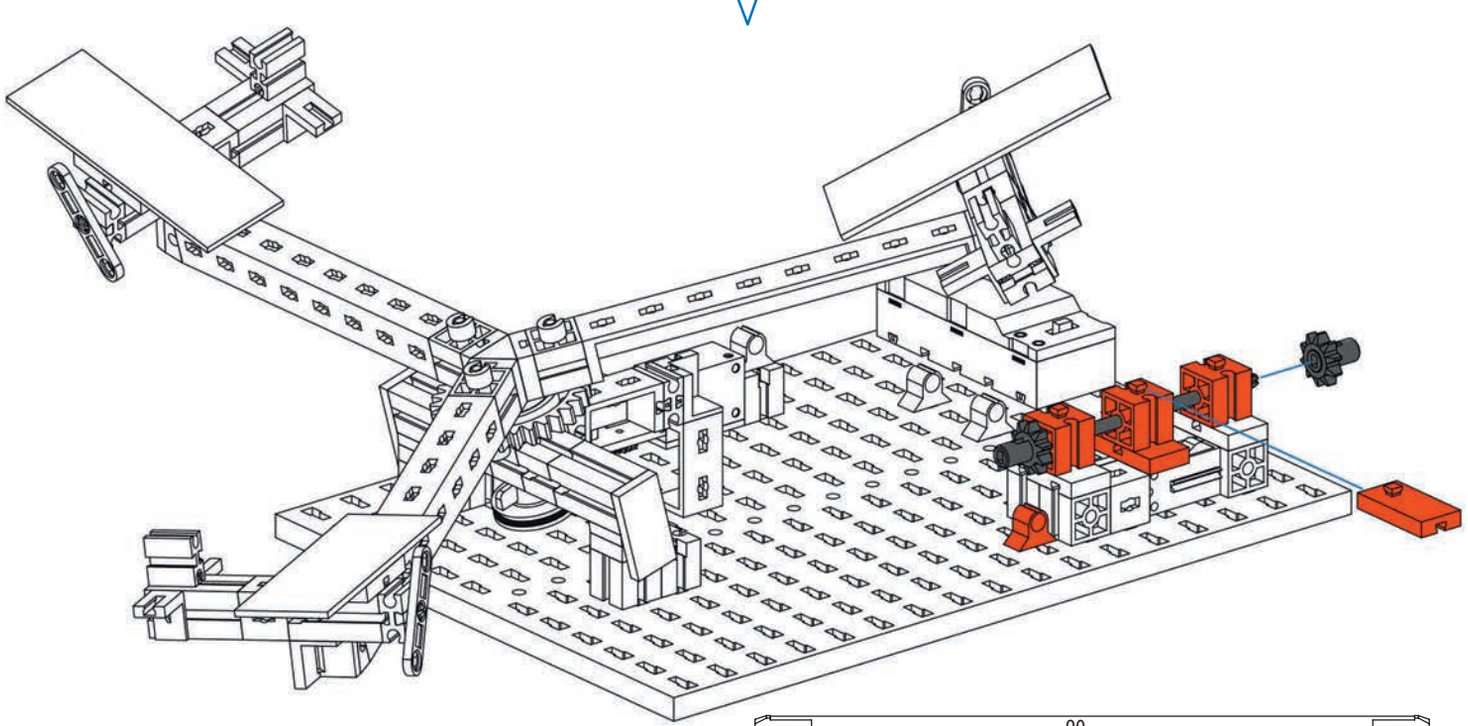

774

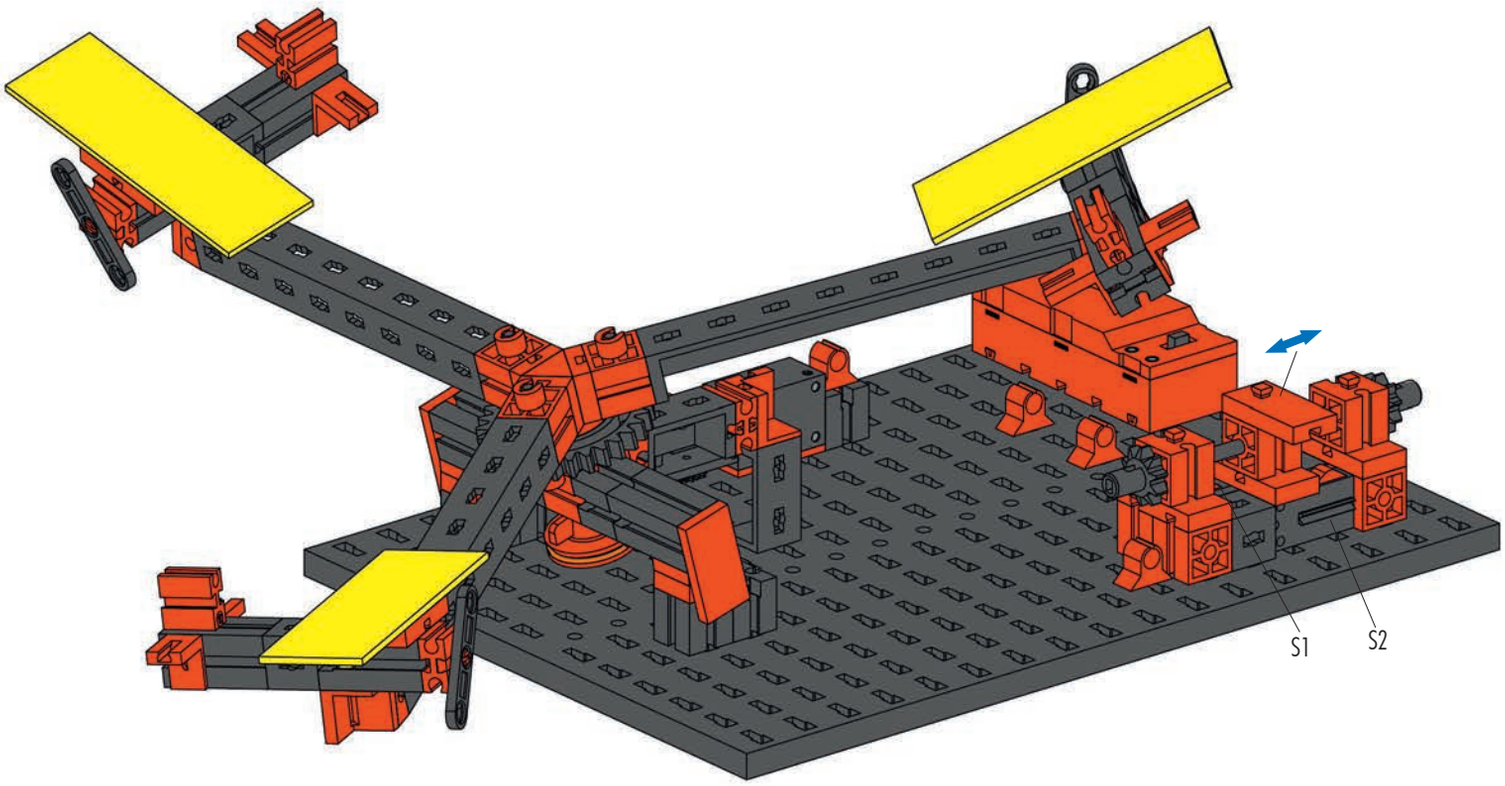

Schaltplan
Circuit diagram
Plan électrique

Schakelschema
Diagrama de circuitos
Plano elétrico de ligação

Schema elettrico
Схема подключения
电路图

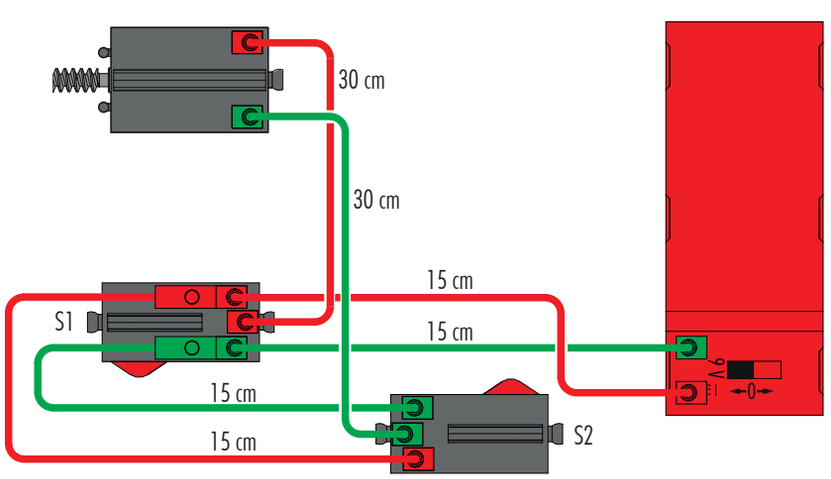

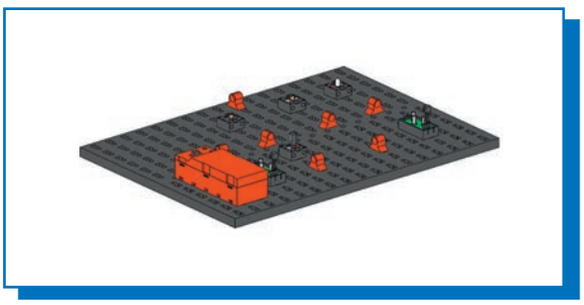

Einfacher Blinker
Simple flasher
Clignotant simple

Eenvoudig knipperlicht
Intermitente sencillo
Pisca-pisca simples

Lampeggiatore semplice
Простая мигалка
单个闪烁灯

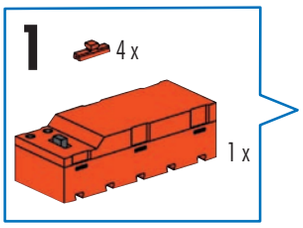

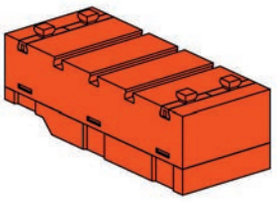

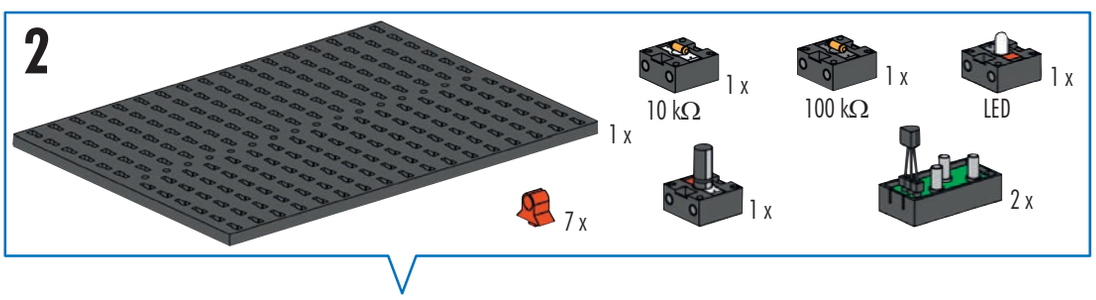

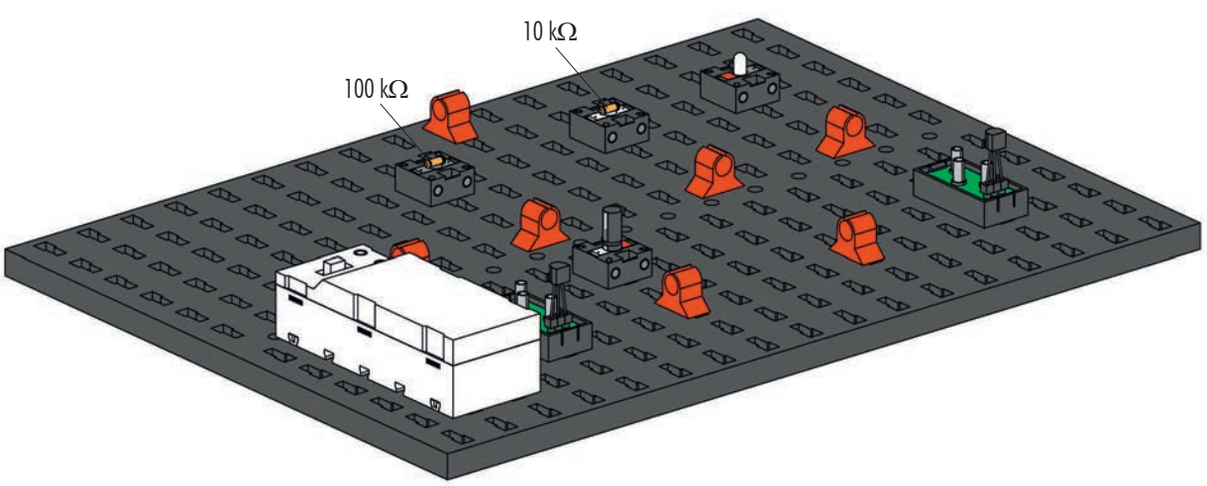

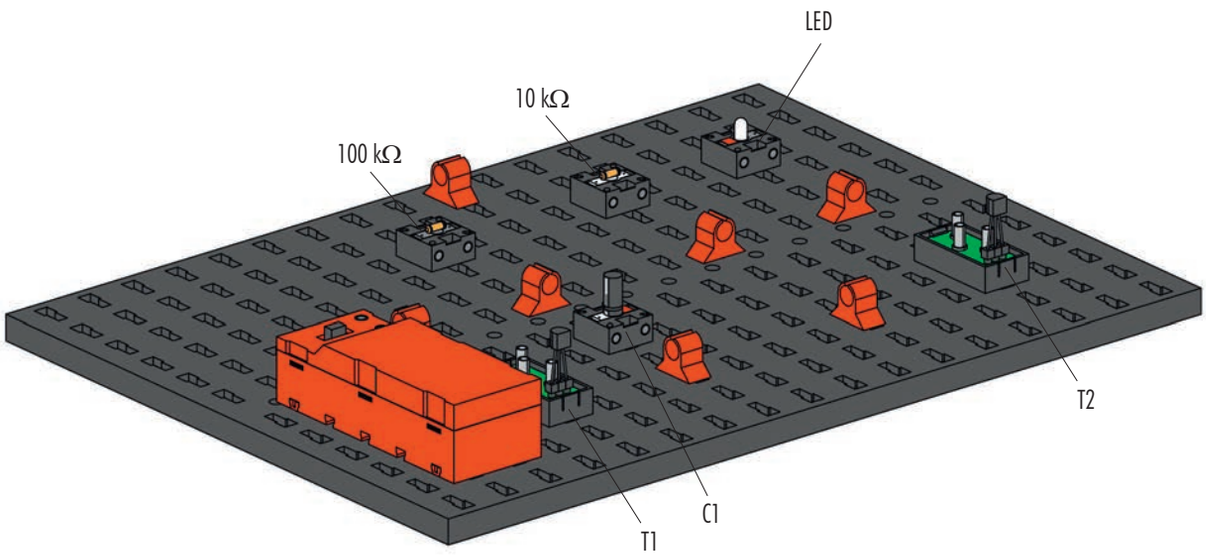

Schaltplan
Circuit diagram
Plan électrique

Schakelschema
Diagrama de circuitos
Plano elétrico de ligação

Schema elettrico
Схема подключения
电路图

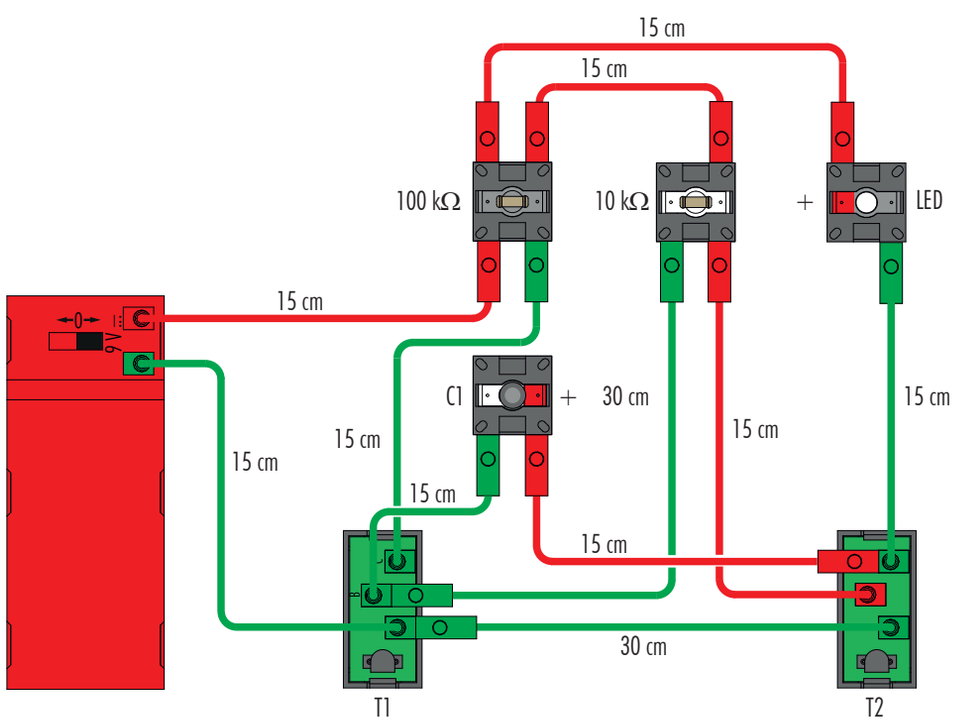

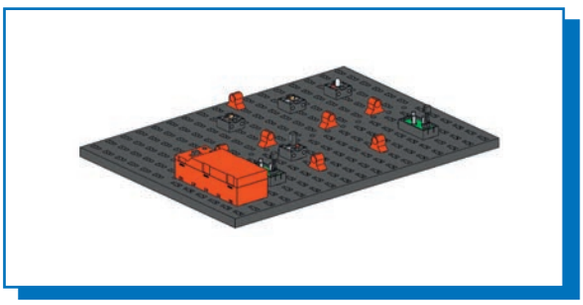

Wechselblinker
Alternating flasher
Clignotant alternant
Knipperlichtwisselaar
Intermitente alternado
Pisca-pisca comutável
Lampeggiatore alternato
Переменная мигалка
两个交替的闪烁灯

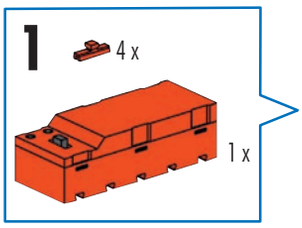

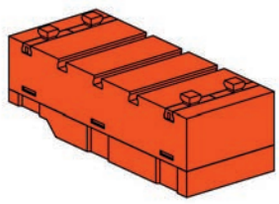

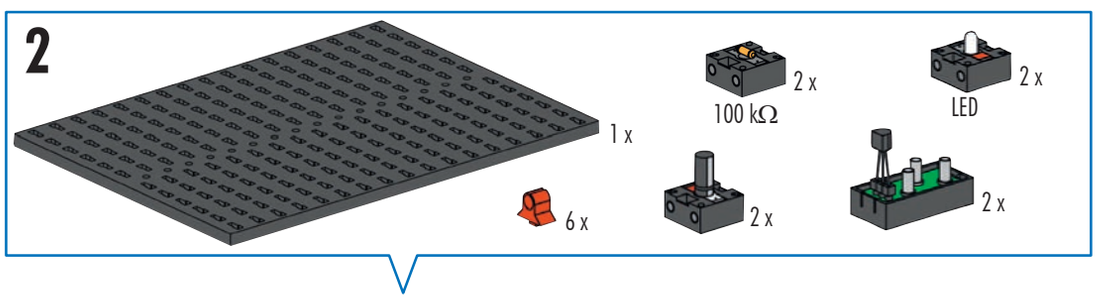

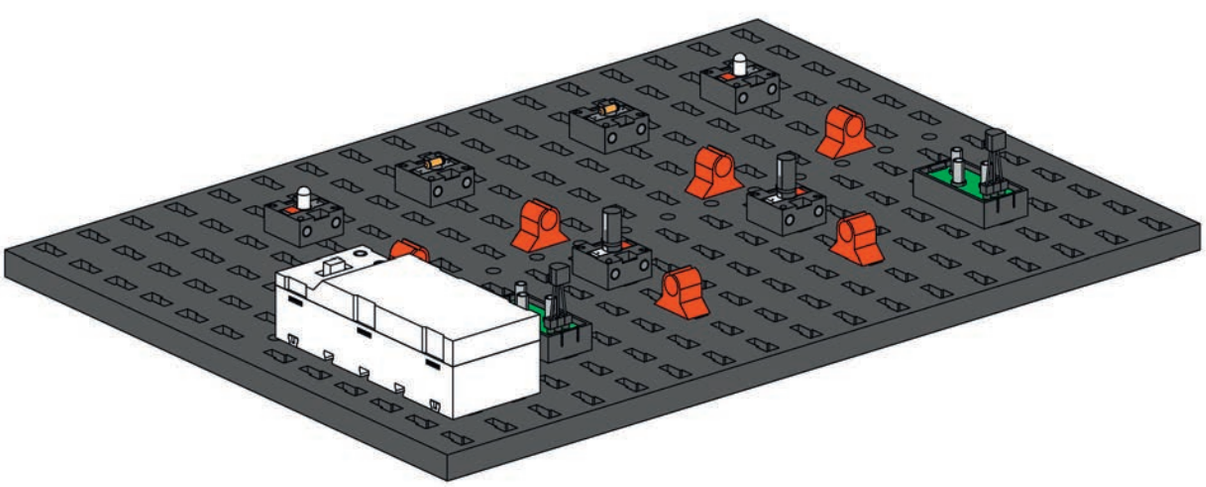

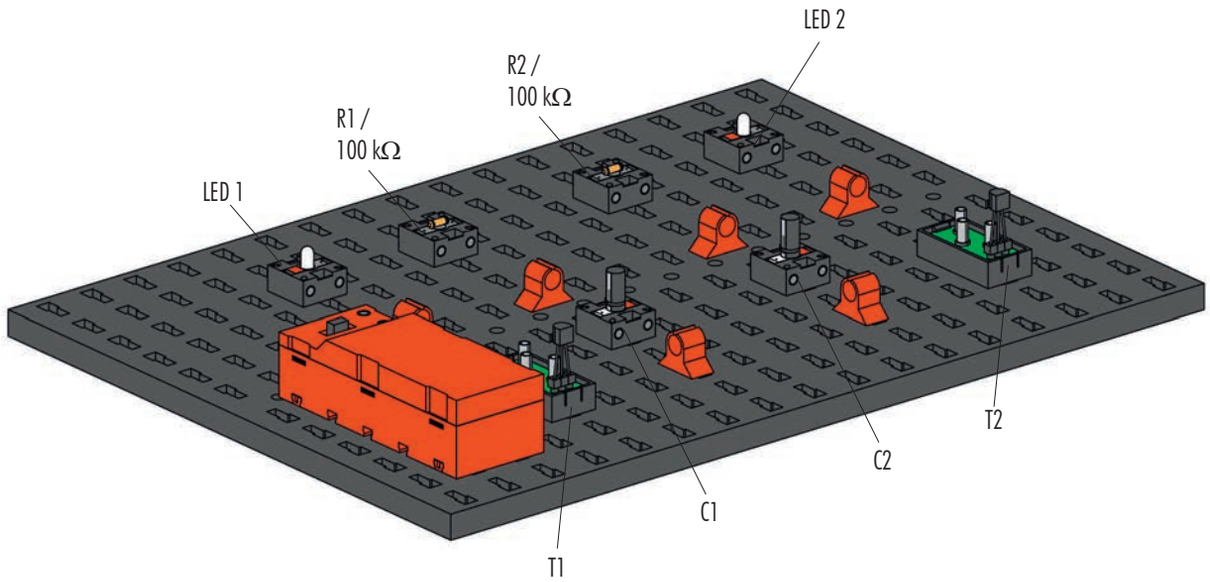

Schaltplan
Circuit diagram
Plan électrique

Schakelschema
Diagrama de circuitos
Plano elétrico de ligação

Schema elettrico
Схема подключения
电路图

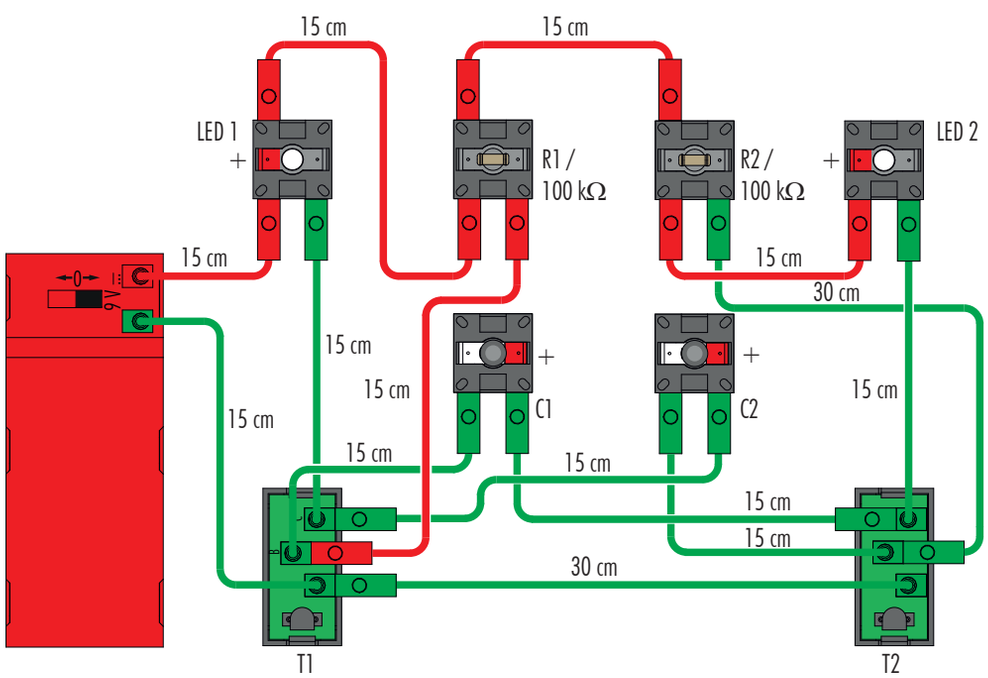

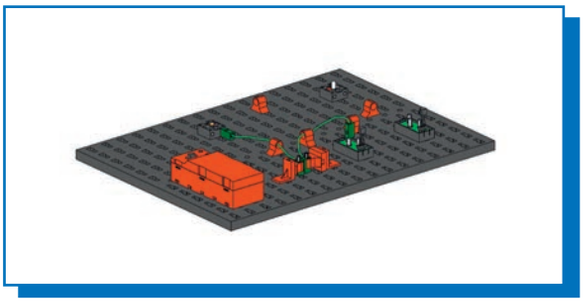

Berührungsschalter
Touch switch
Commutateur tactile
Contactschakelaar
Interruptor de contacto
Interruptor de toque
Interruttore a sfioramento
Сенсорный выключатель
触摸式开关

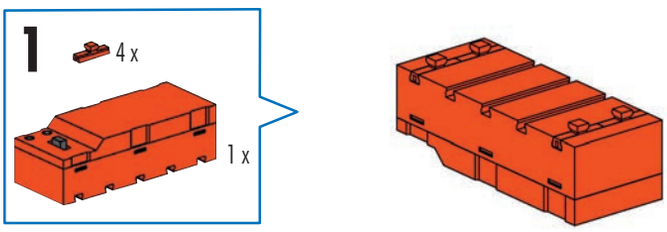

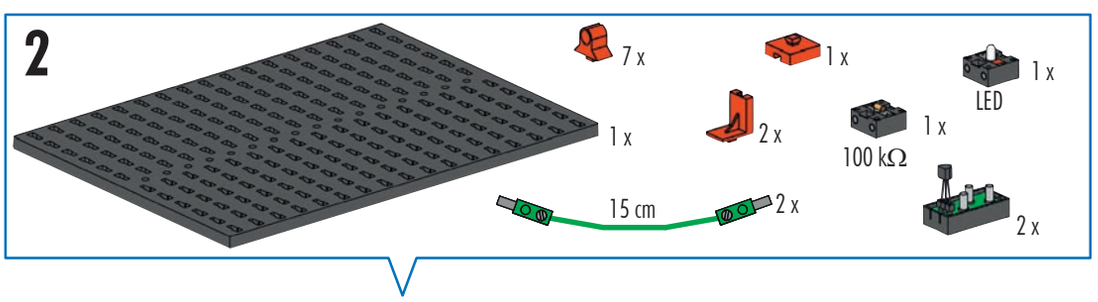

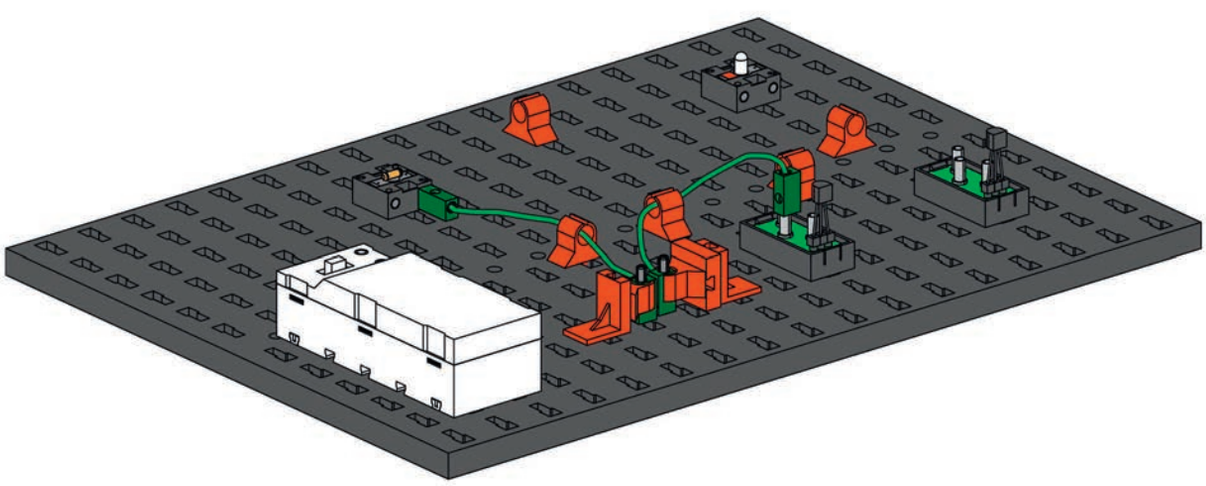

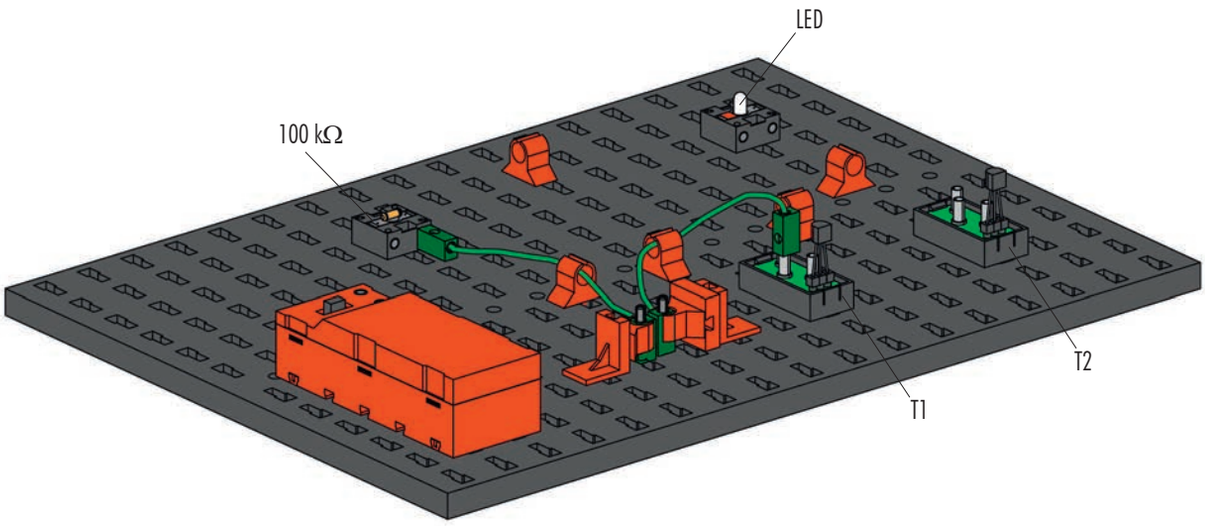

Schaltplan
Circuit diagram
Plan électrique

Schakelschema
Diagrama de circuitos
Plano elétrico de ligação

Schema elettrico
Схема подключения
电路图

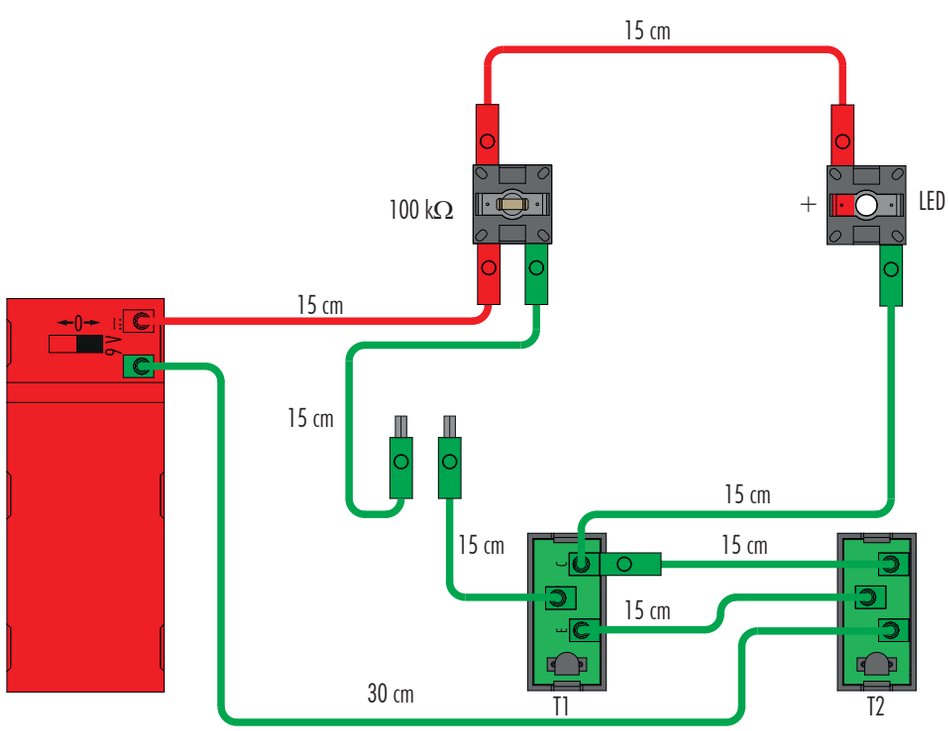

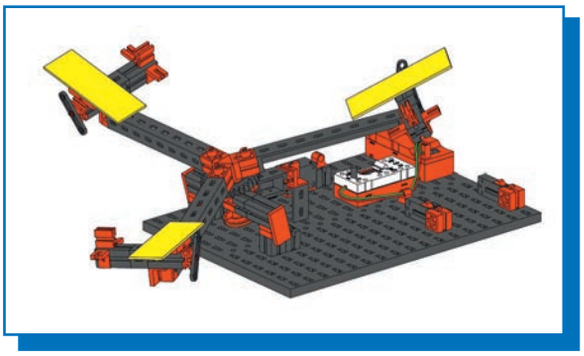

Karussell
Merry-go-round
Manège
Draaimolen
Tiovivo
Carrossel
Giostra
Карусель
旋转木马

1-10

Seite 23
Page 23
Page 23
Bladzijde 23
Página 23
Pagina 23
Страница 23
页次 23

11

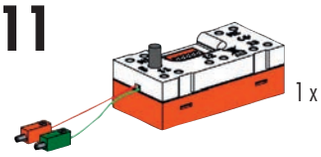
1 x

2 x

2 x

1 x

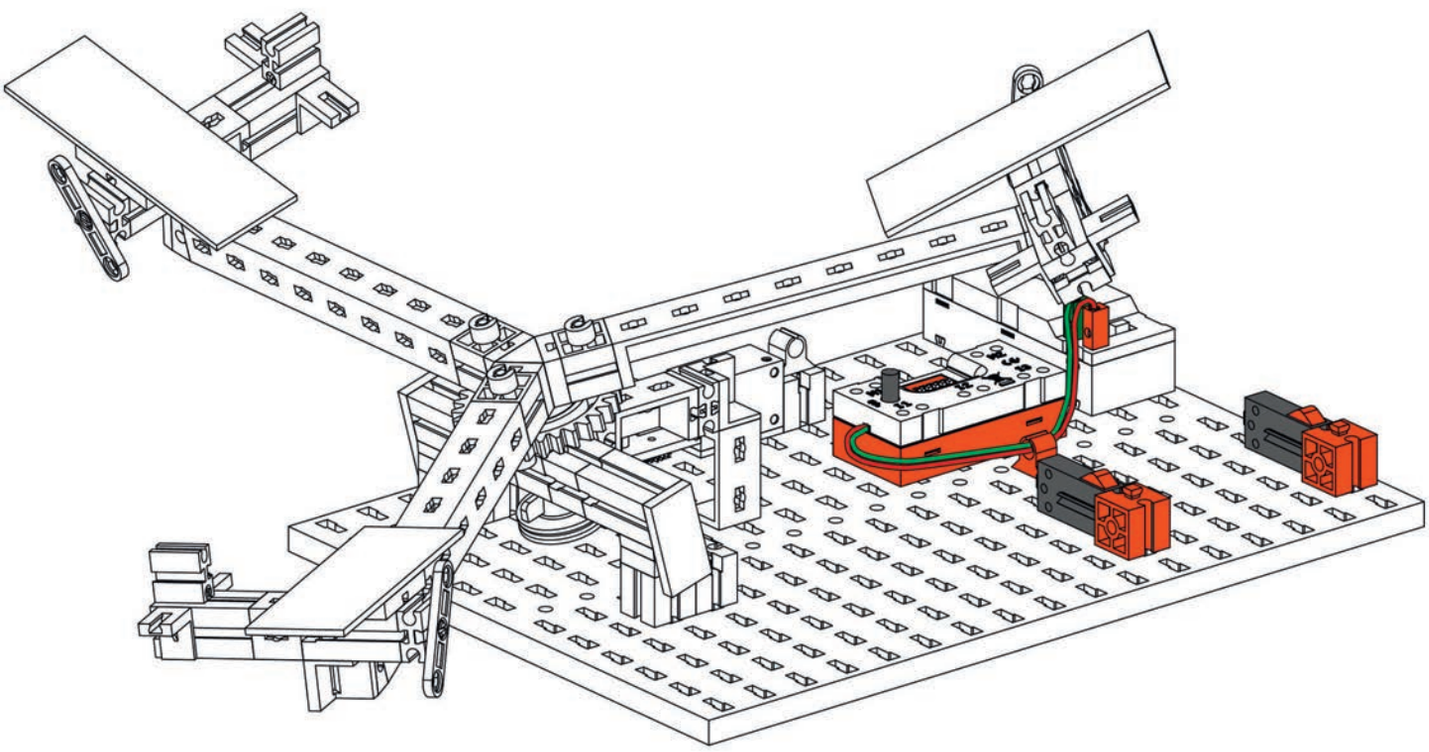

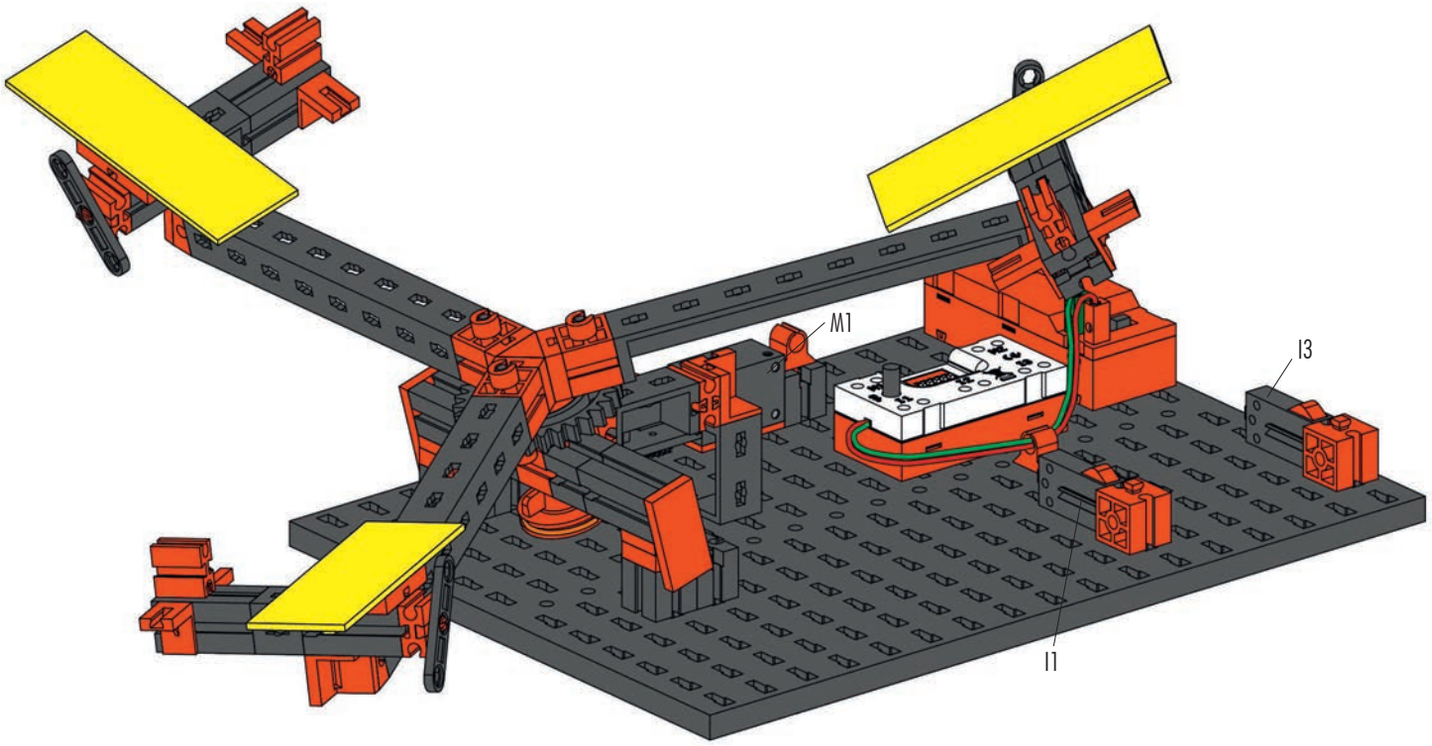

Schaltplan
Circuit diagram
Plan électrique

Schakelschema
Diagrama de circuitos
Plano elétrico de ligação

Schema elettrico
Схема подключения
电路图

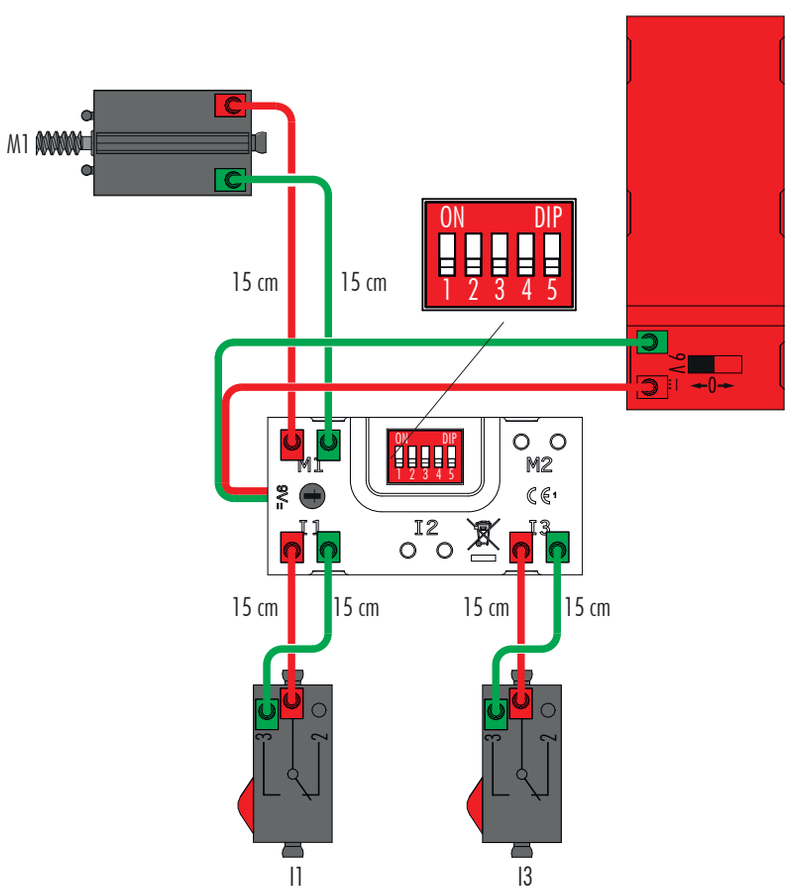

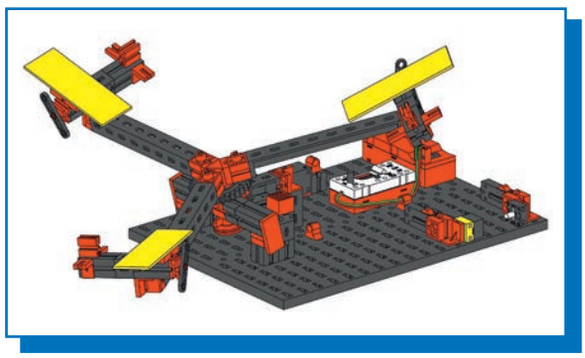

Karussell mit Lichtschranke
Merry-go-round with light barrier
Manège avec barrière lumineuse
Draaimolen met fotocel
Tiovivo con barrera fotoeléctrica
Carrossel com célula fotoelétrica
Giostra con barriera fotoelettrica
Карусель с фоторелейным барьером
配备光栅的旋转木马

1-10

Seite 23
Page 23
Page 23
Bladzijde 23
Página 23
Pagina 23
Страница 23
页次 23

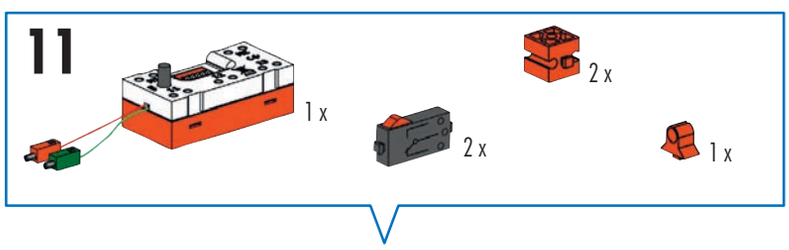

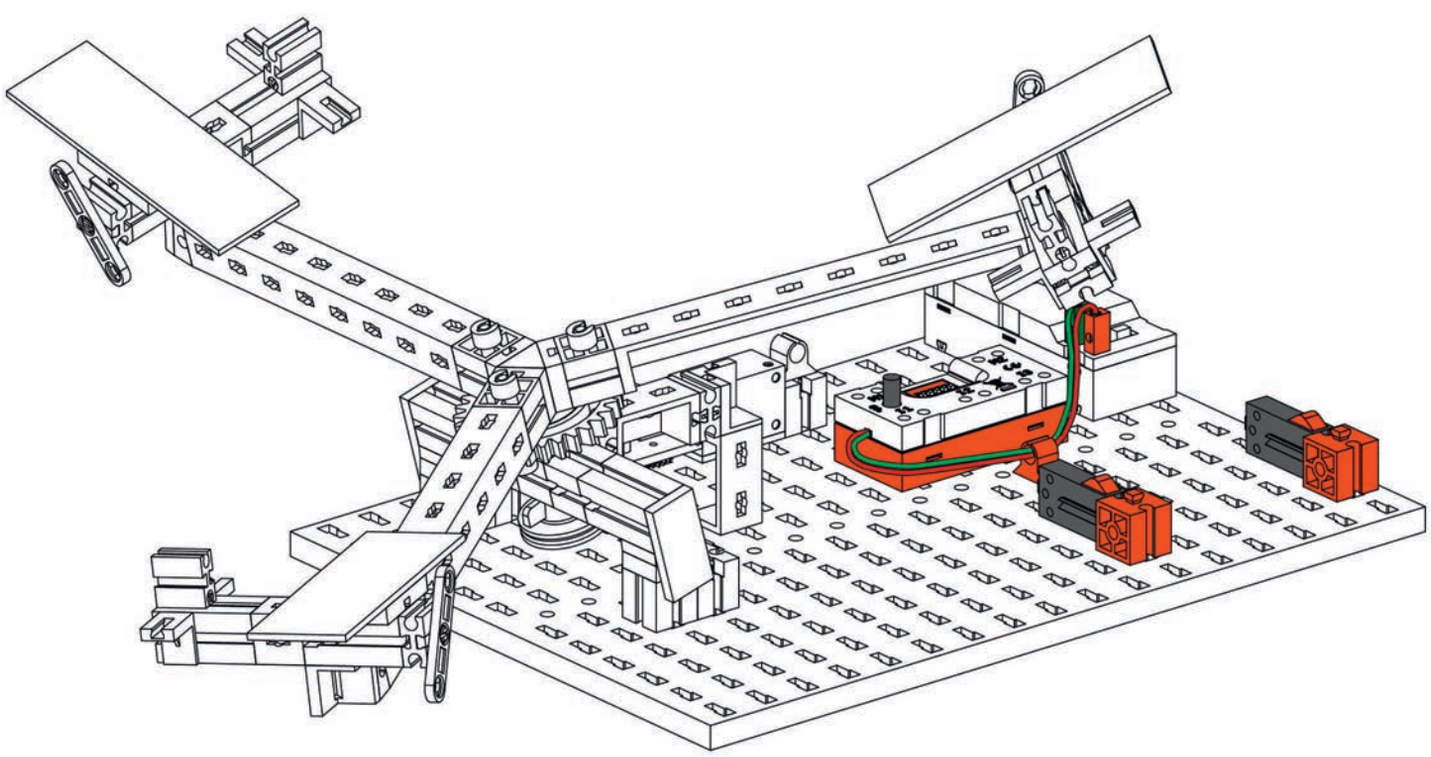

12 2 x 2 x 1 x 1 x 1 x 3 x 1 x 2 x LED 1 x

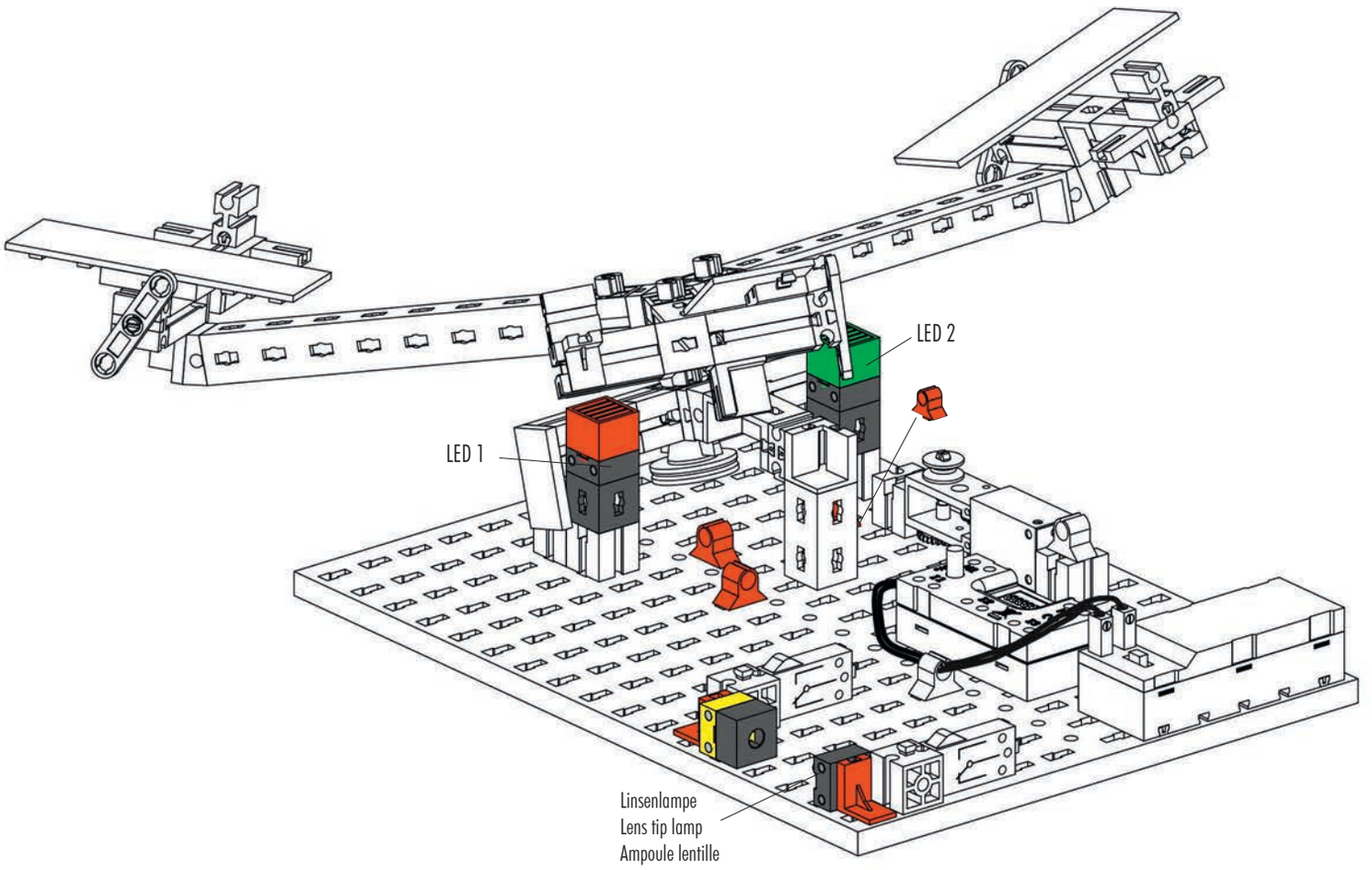

Linsenlampe
Lens tip lamp
Ampoule lentille
Lenslampje
Lampada lenticolare
Lâmpada de formato lenticular
Lampada lenticolare
Лампа с линзой
透镜灯

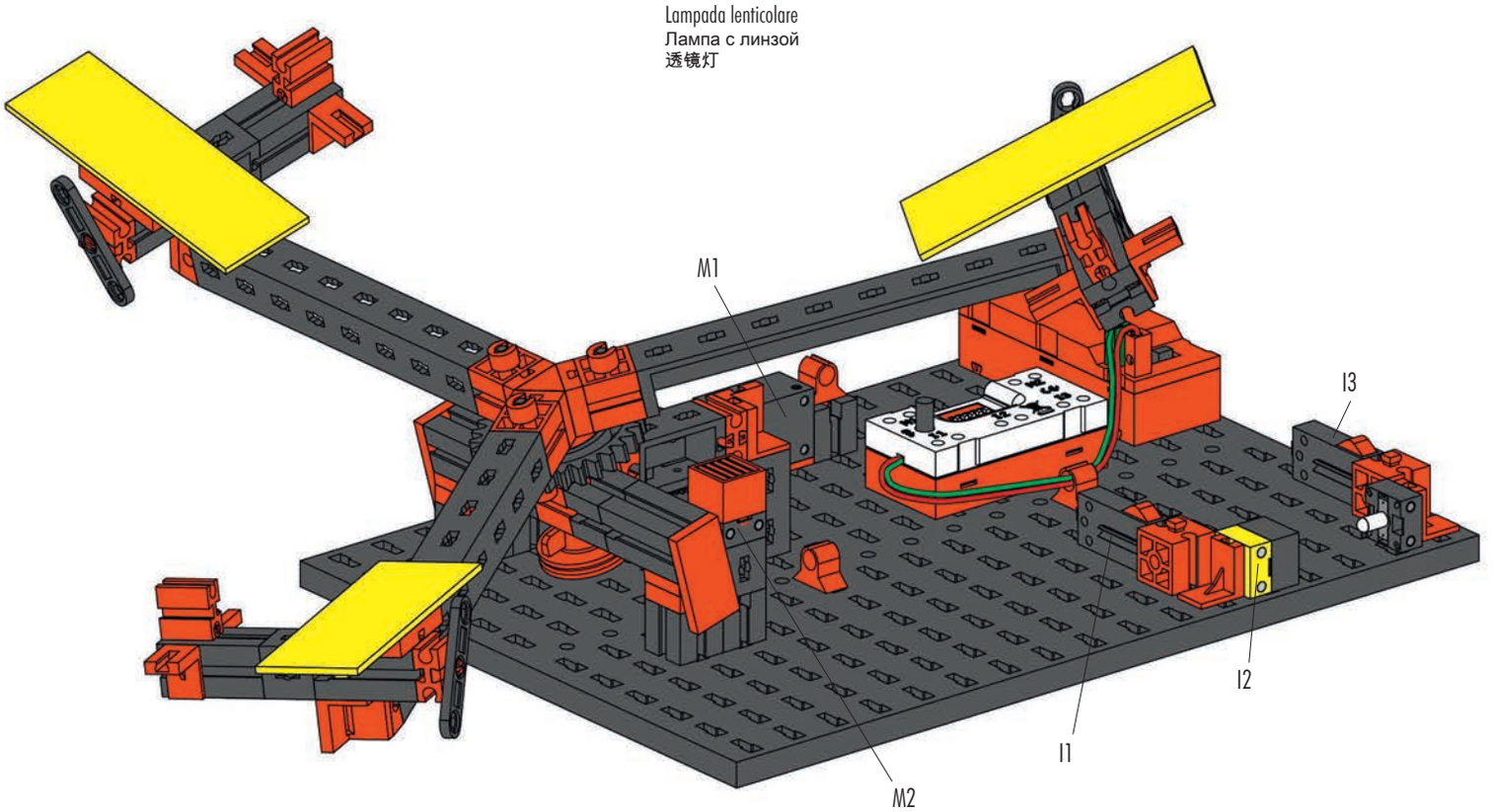

785

Schaltplan
Circuit diagram
Plan électrique

Schakelschema
Diagrama de circuitos
Plano elétrico de ligação

Schema elettrico
Схема подключения
电路图

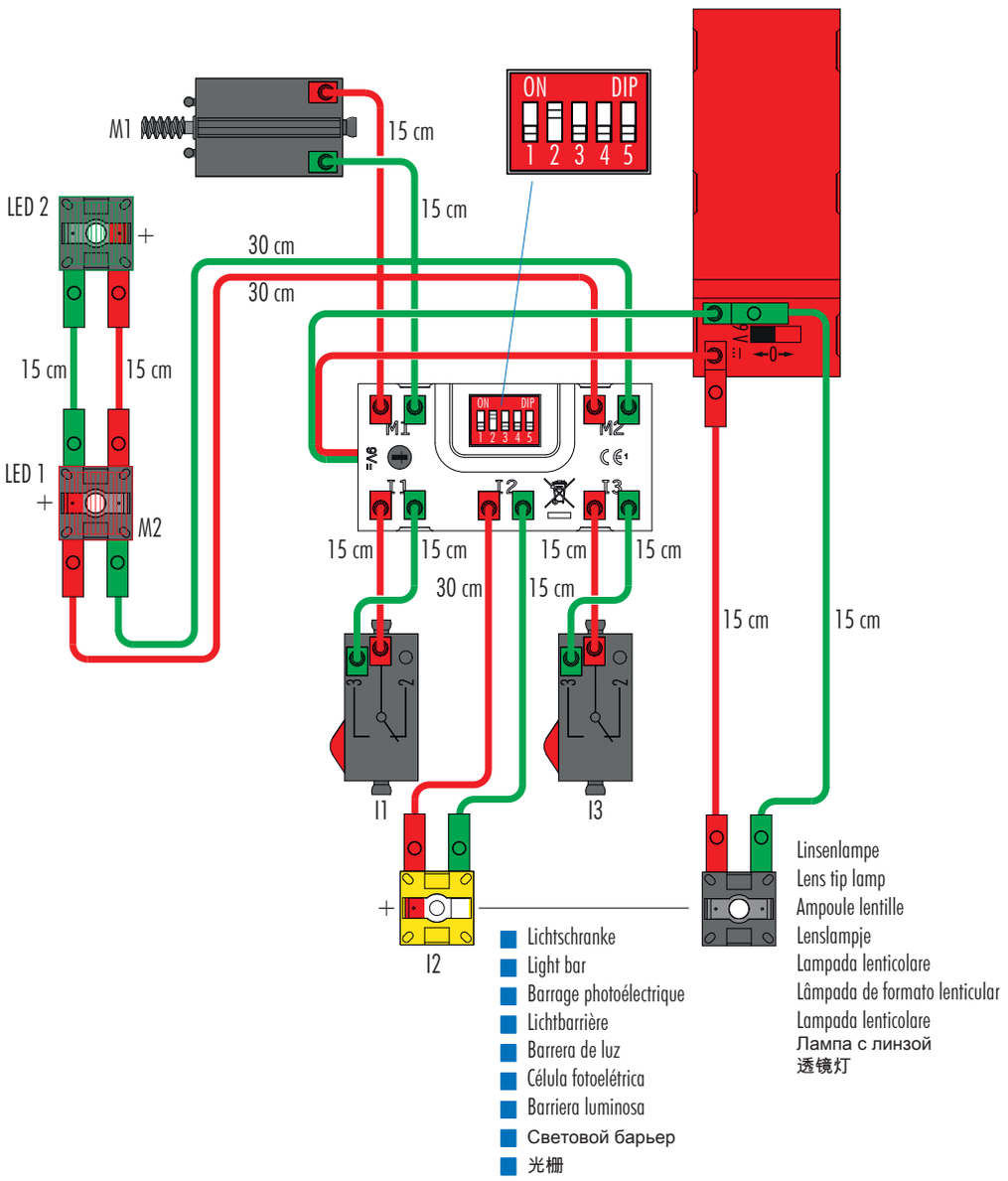

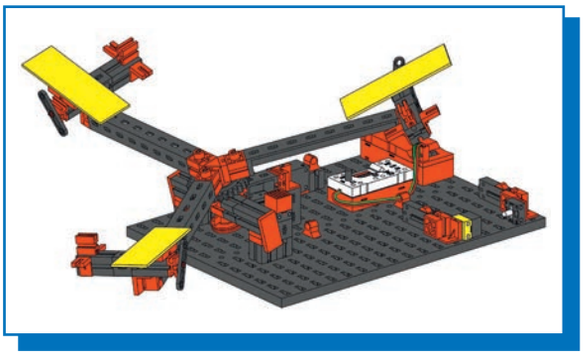

Karussell mit Berührungsschalter
Merry-go-round with touch switch
Manège avec commutateur tactile
Draaimolen met contactschakelaar
Tiovivo con interruptor de contacto
Carrossel com interruptor de toque
Giostra con interruttore a sfioramento
Карусель с сенсорным выключателем
配备触摸式开关的旋转木马

1-10

Seite 23
Page 23
Page 23
Bladzijde 23
Página 23
Pagina 23
Страница 23
页次 23

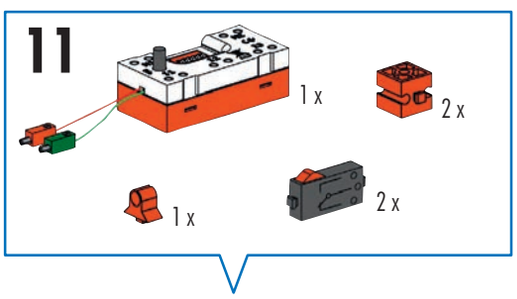

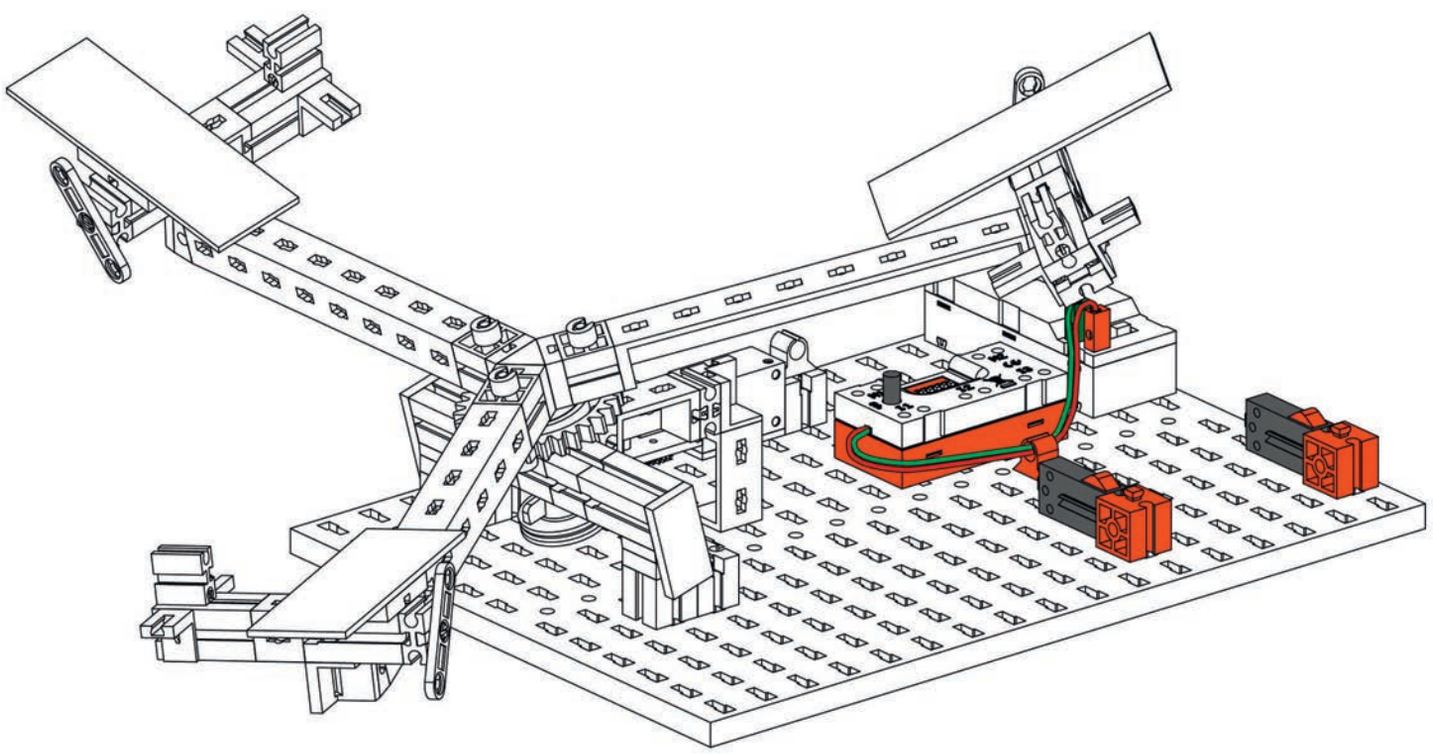

12

2 x

2 x

1 x

1 x

1 x

2 x

1 x
100 kΩ

1 x
10 kΩ

6 x

1 x 15 cm
1 x 30 cm

2 x
LED

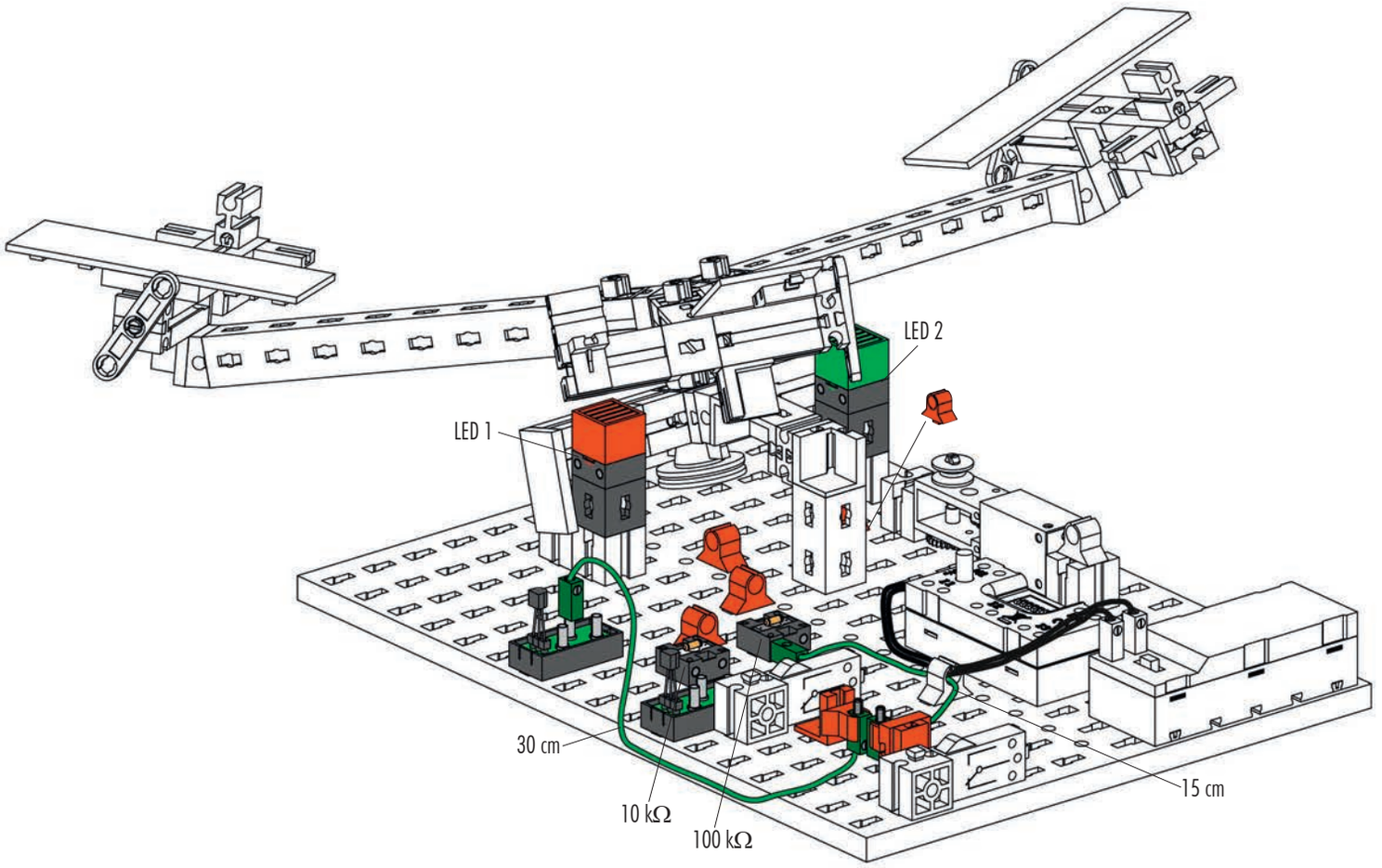

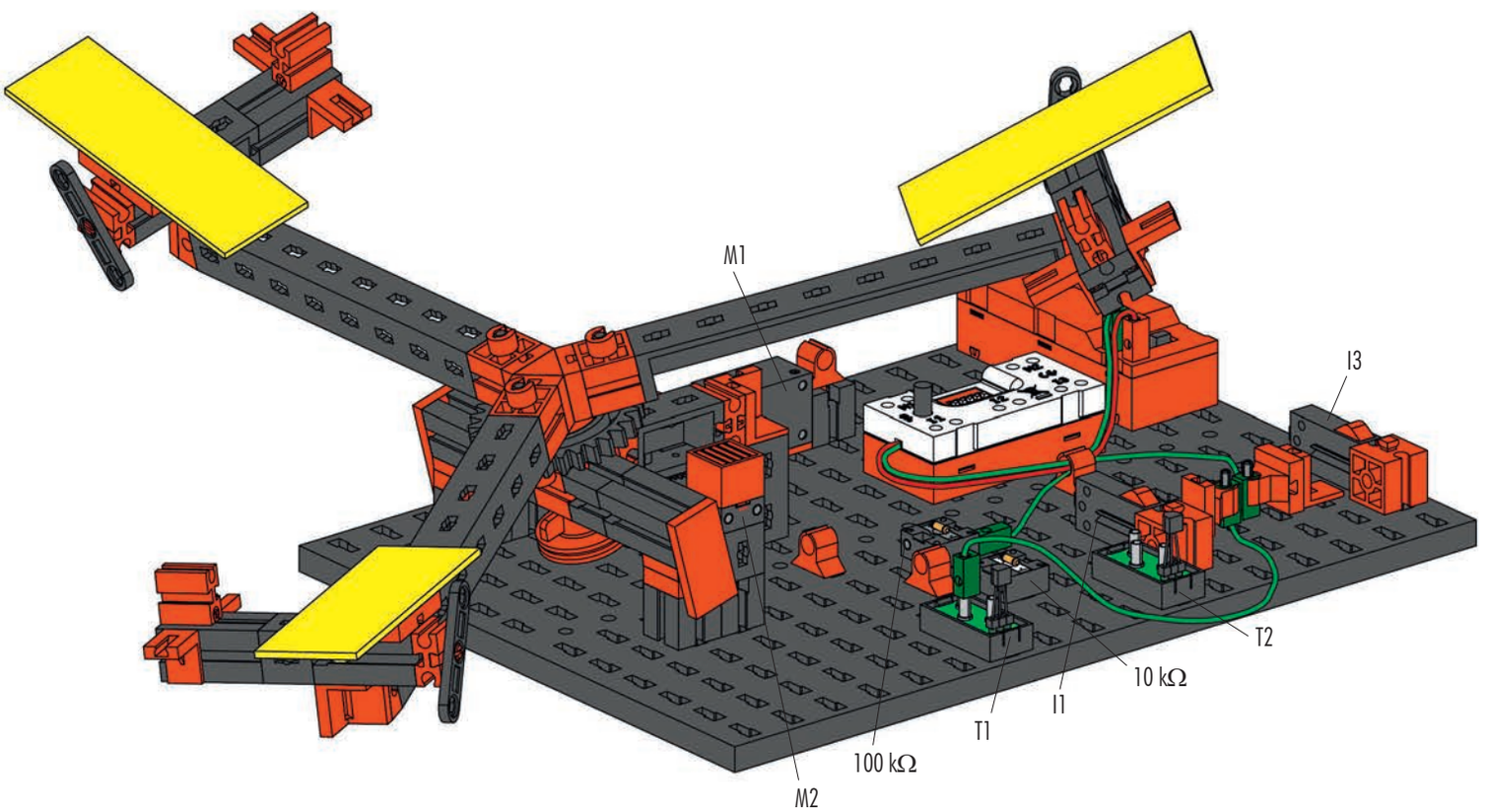

Schaltplan
Circuit diagram
Plan électrique

Schakelschema
Diagrama de circuitos
Plano elétrico de ligação

Schema elettrico
Схема подключения
电路图

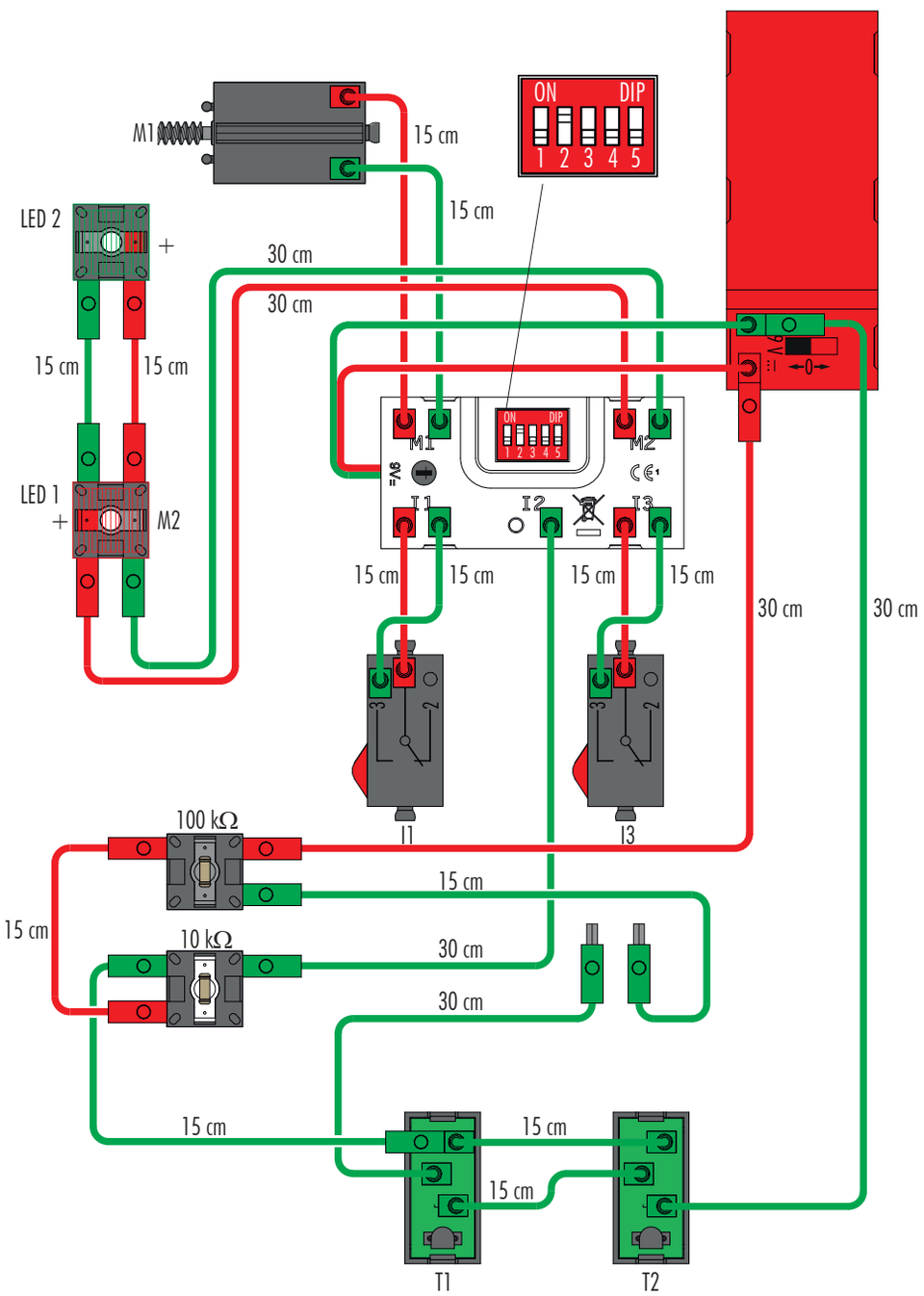

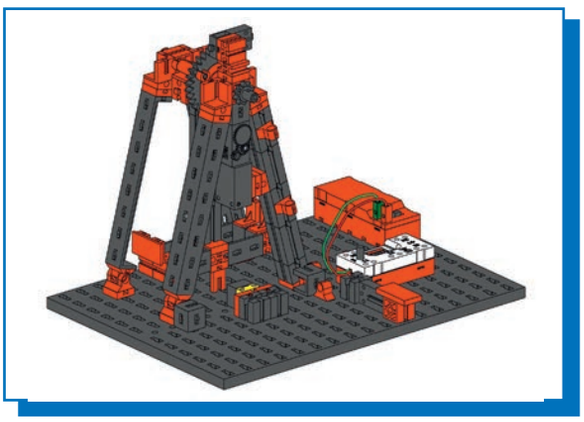

Schiffschaukel
Ship see-saw
Bateau-balançoire

Familieschommel
Columpio de barco
Balanço de barco

Altalena a gondola
Качели
船形秋千

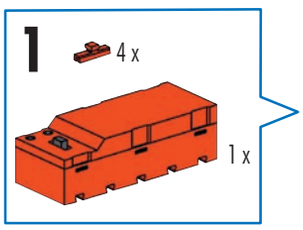

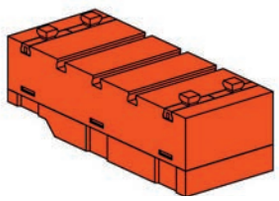

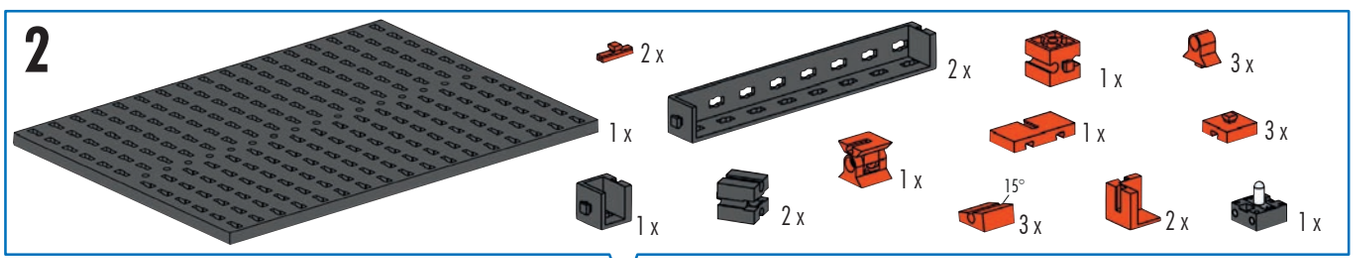

Linsenlampe
Lens tip lamp
Ampoule lentille
Lenslampje
Lampada lenticolare
Lâmpada de formato lenticular
Lampada lenticolare
Лампа с линзой
透镜灯

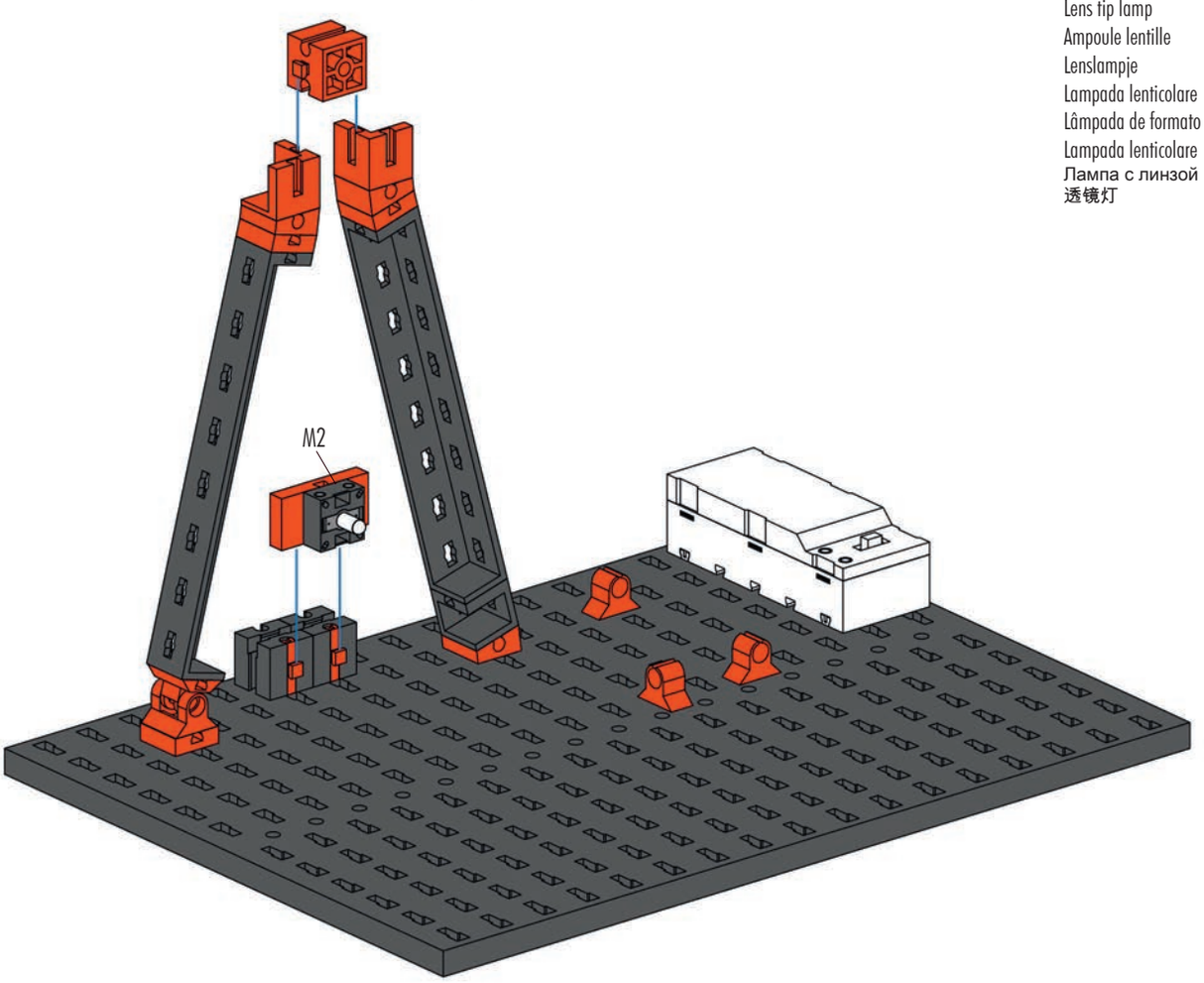

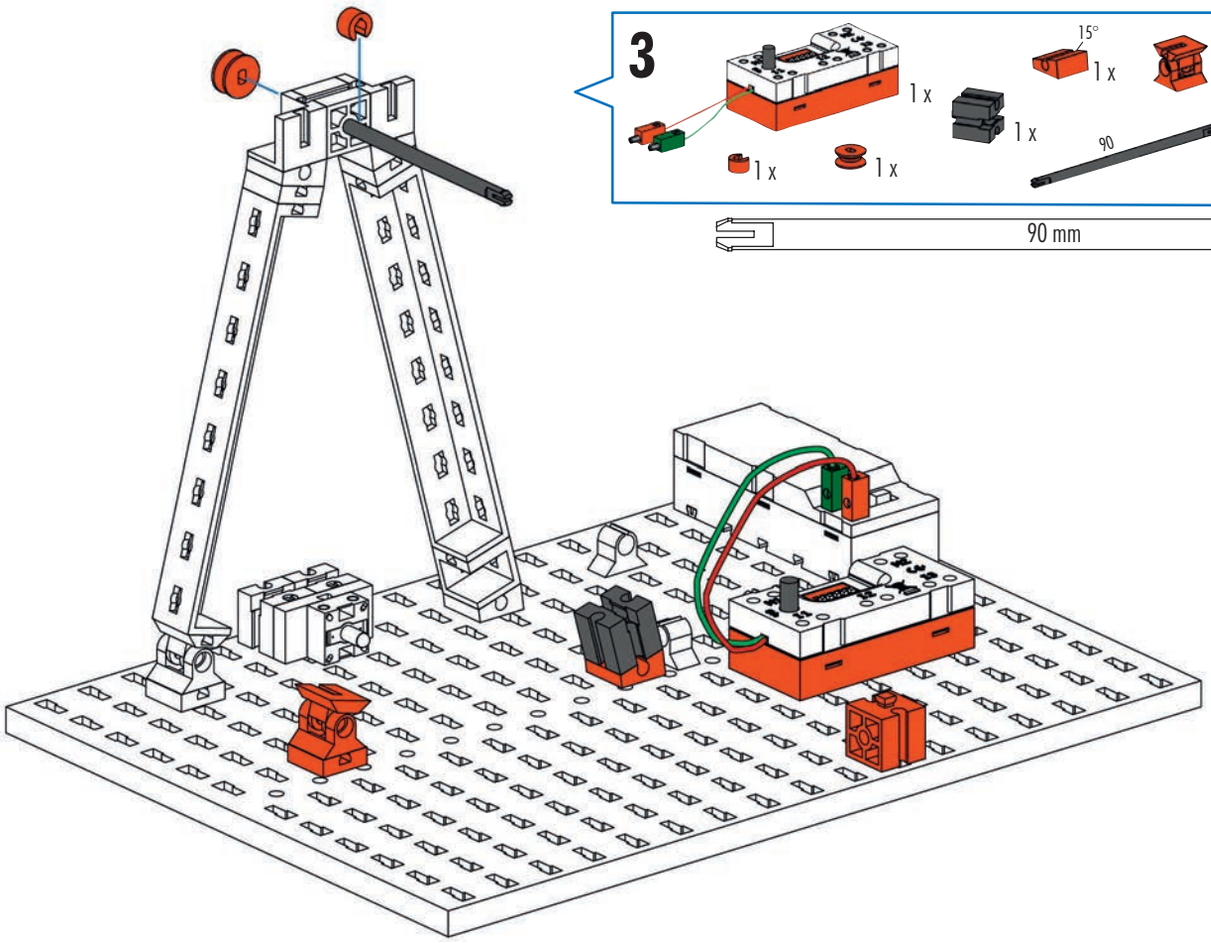

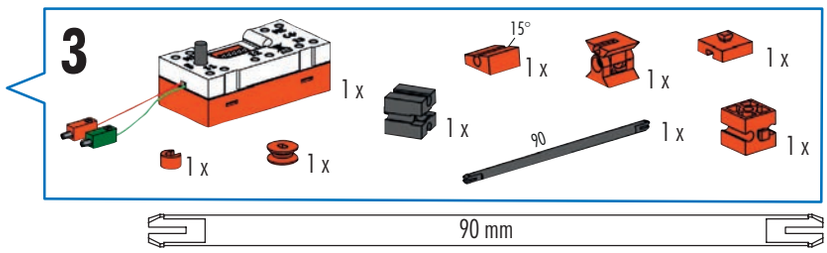
3
1 x
15°
1 x
1 x
1 x
1 x
1 x
90
1 x
1 x
1 x
90 mm

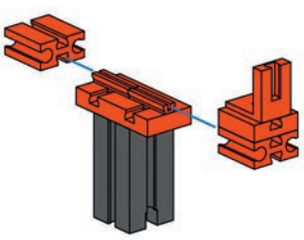

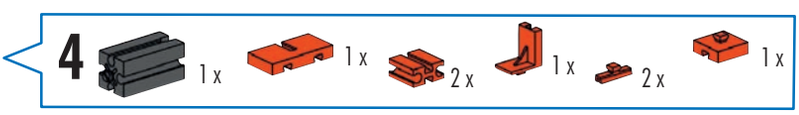
4
1 x
1 x
2 x
1 x
2 x
1 x

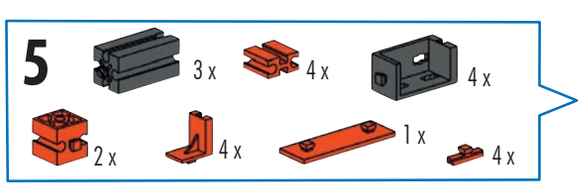
5
3 x
4 x
4 x
2 x
4 x
1 x
4 x

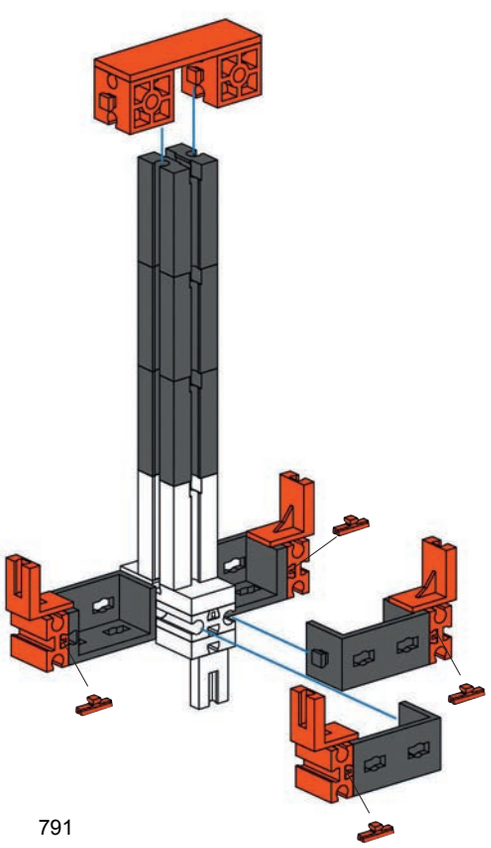

791

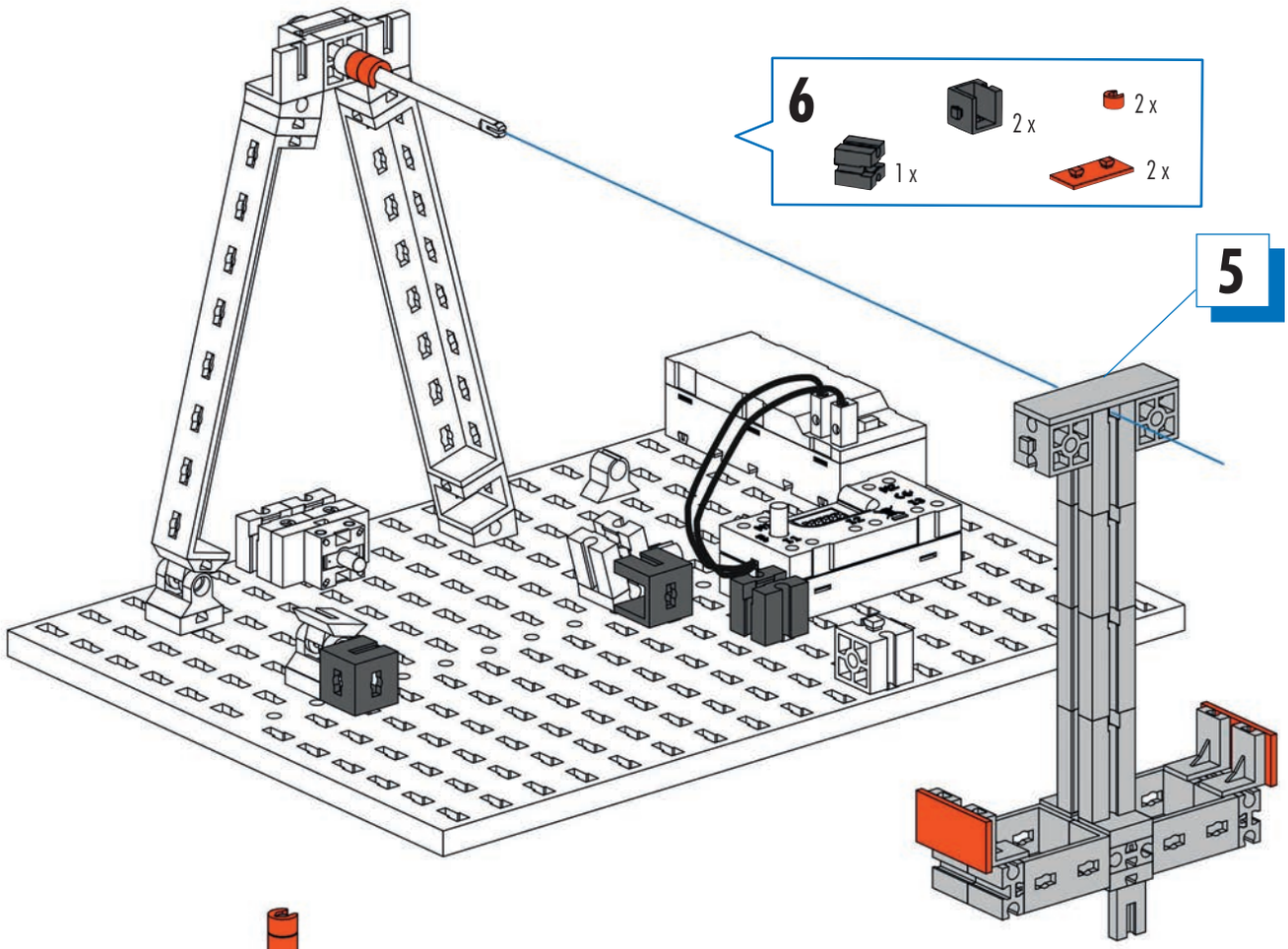
6
2 x
2 x
1 x
2 x
5

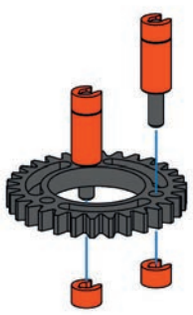

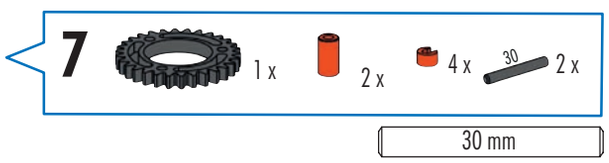
7
1 x
2 x
4 x
30
2 x
30 mm

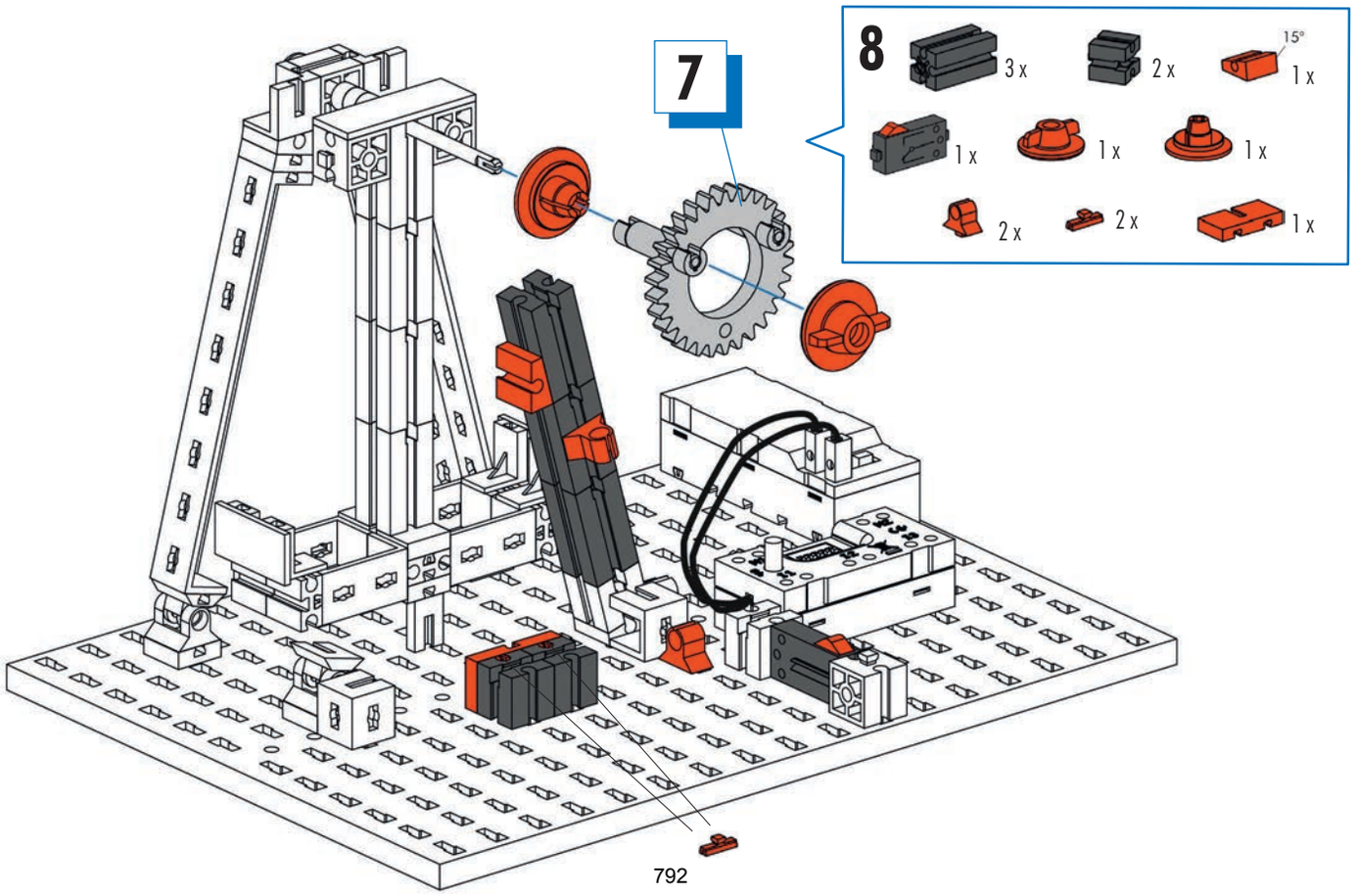
7
8
3 x
2 x
15°
1 x
1 x
1 x
1 x
2 x
2 x
1 x
792

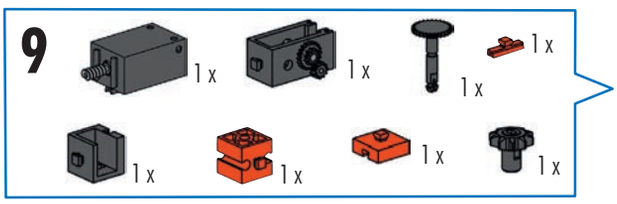
9
1 x
1 x
1 x
1 x
1 x
1 x
1 x

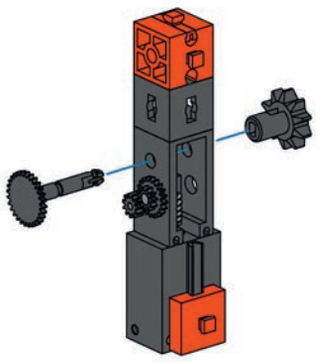

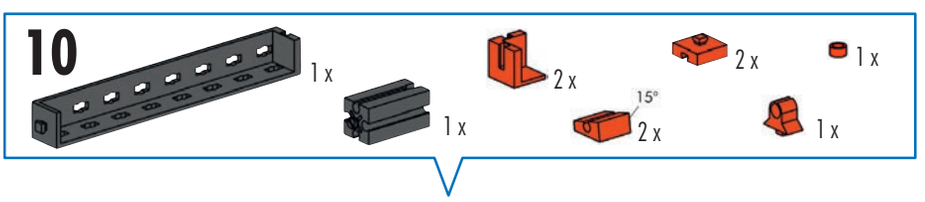
10
1 x
1 x
2 x
2 x
1 x
15°
2 x
1 x

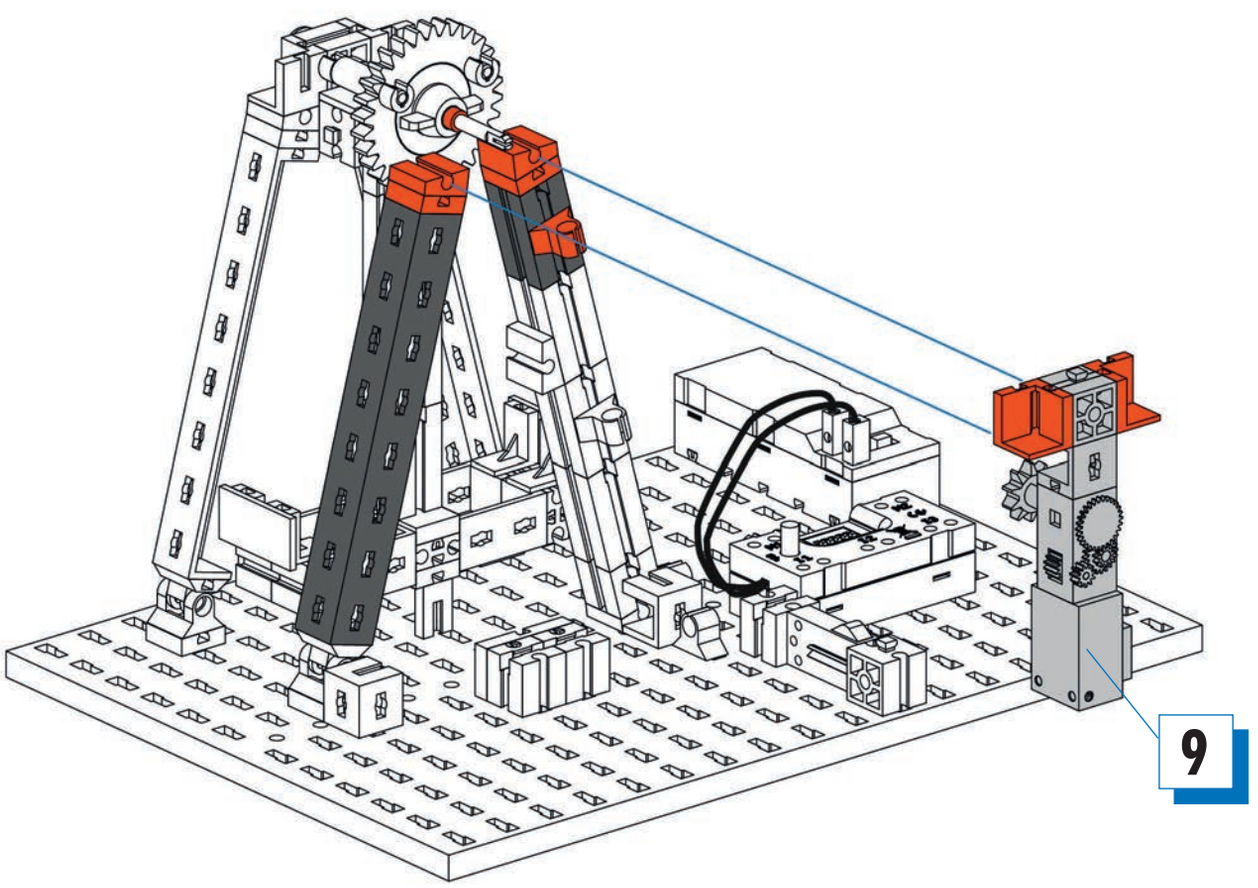
9

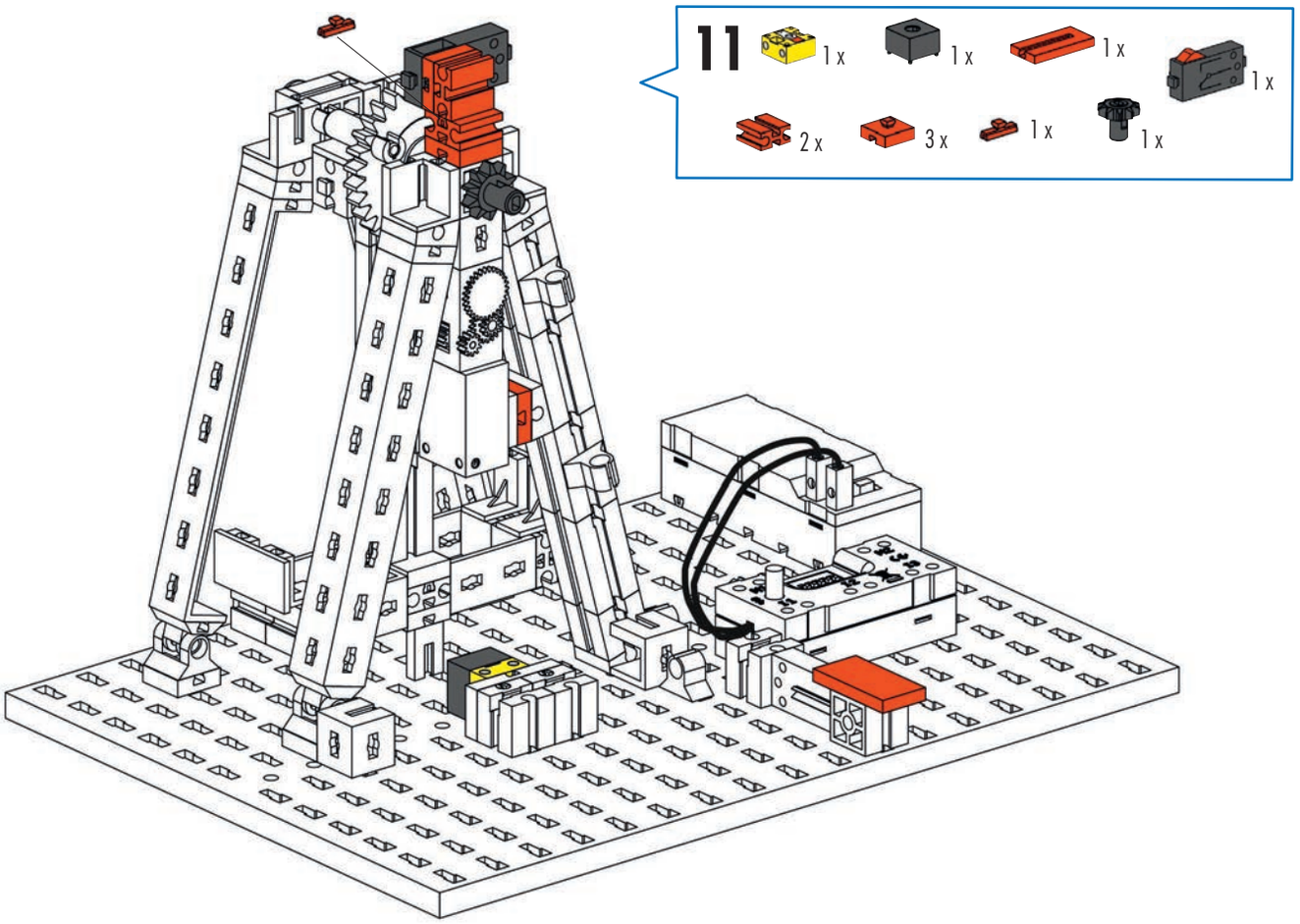
11
1 x
1 x
1 x
1 x
2 x
3 x
1 x
1 x

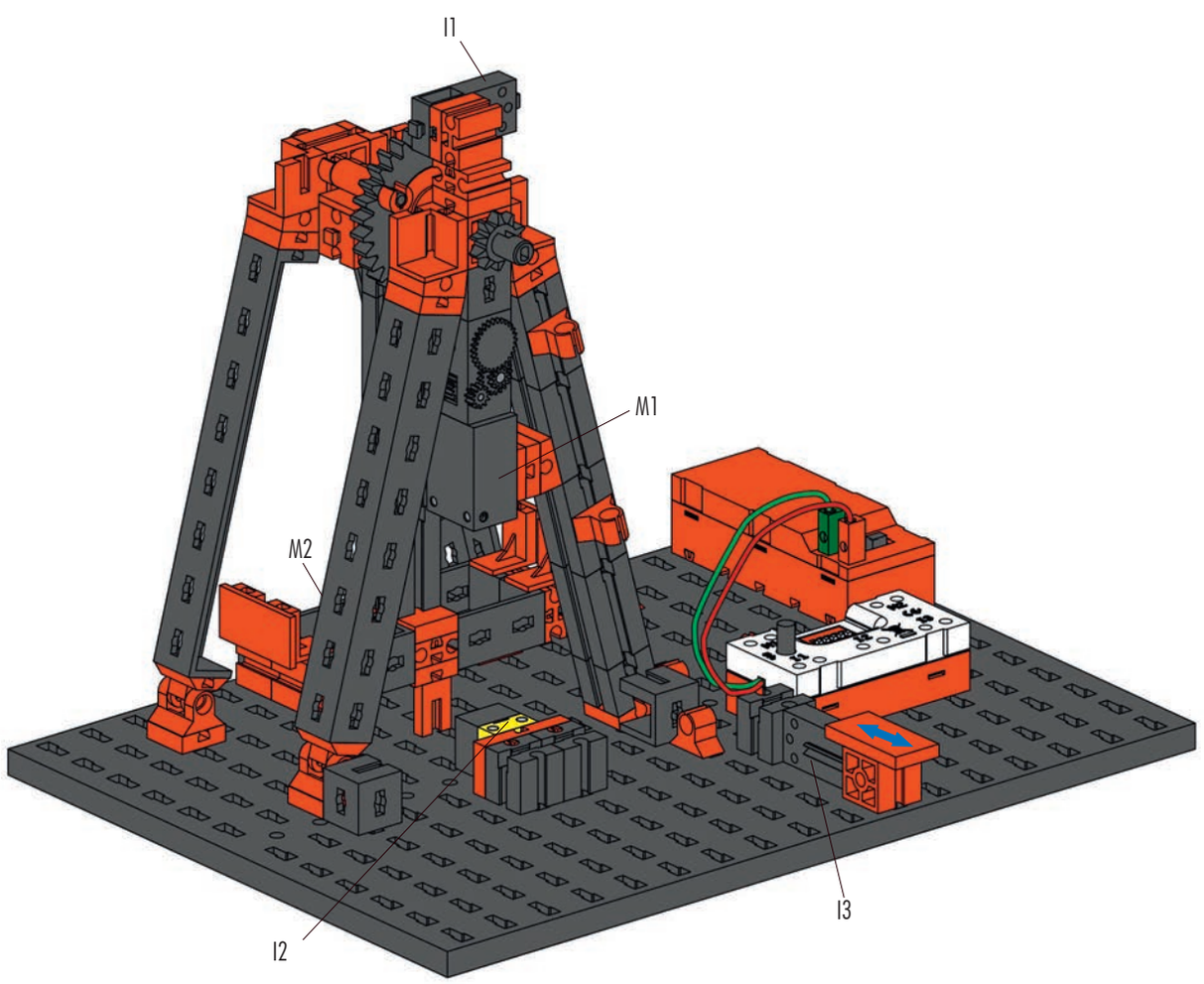
I1
M1
M2
I2
I3

Schaltplan
Circuit diagram
Plan électrique

Schakelschema
Diagrama de circuitos
Plano elétrico de ligação

Schema elettrico
Схема подключения
电路图

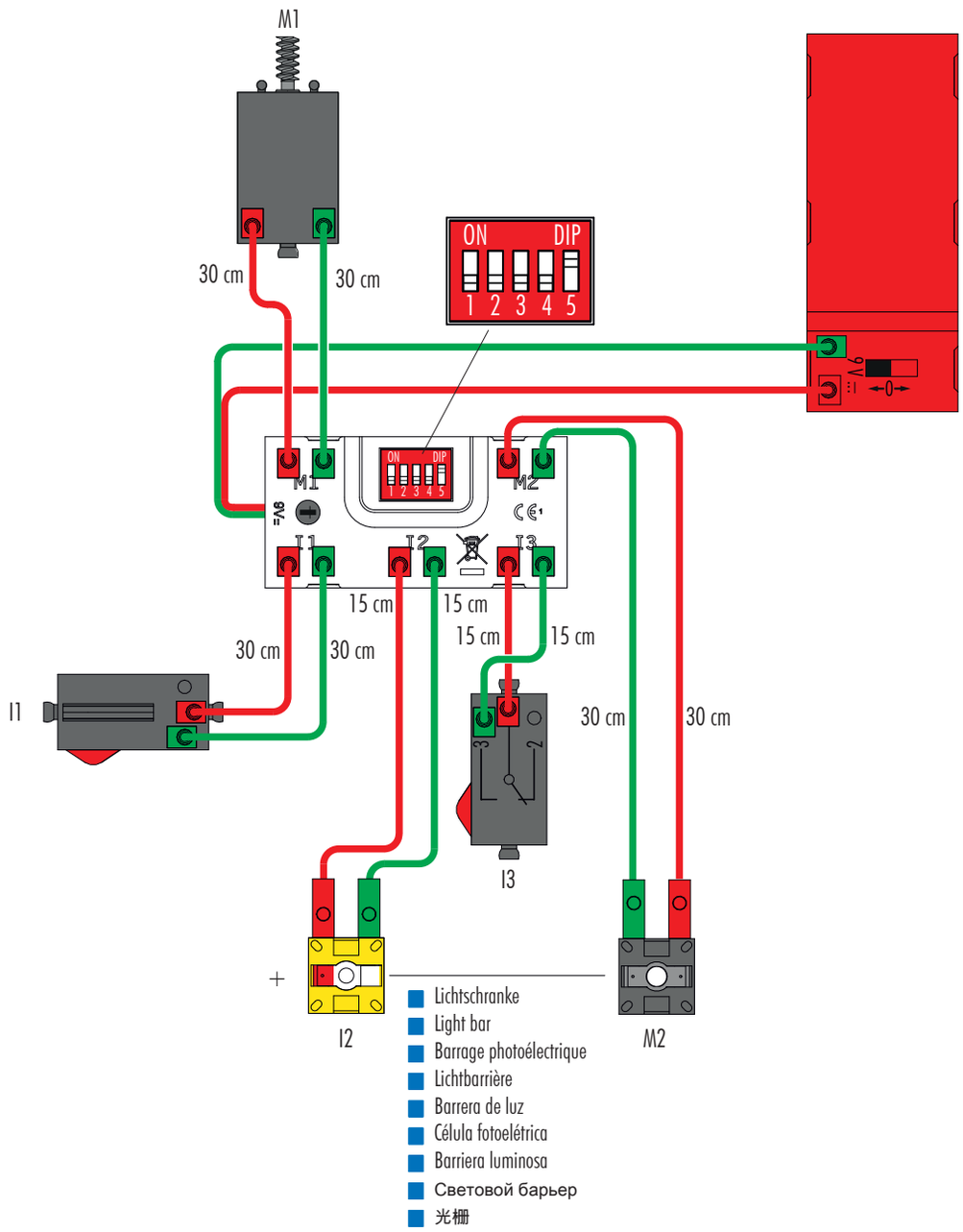

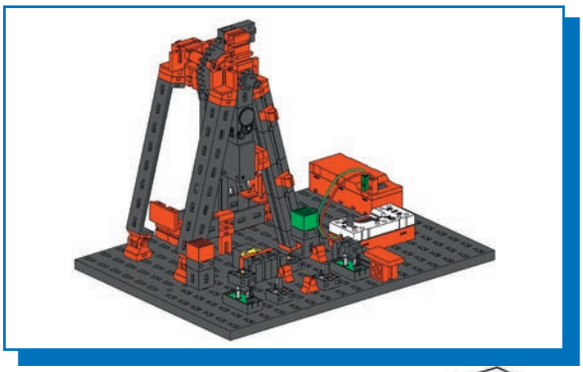

Schiffschaukel mit Wechselblinker
Ship see-saw with alternating flasher
Bateau-balançoire avec clignotant alternant

Familieschommel met knipperlichtwisselaar
Columpio de barco con intermitente alternado
Balanço de barco com pisca-pisca comutável

Altalena a gondola con lampeggiatore alternato
Качели с переменной мигалкой
配备单个闪烁灯的船形秋千

1-11

Seite	42
Page	42
Page	42
Bladzijde	42
Página	42
Pagina	42
Страница	42
页次	42

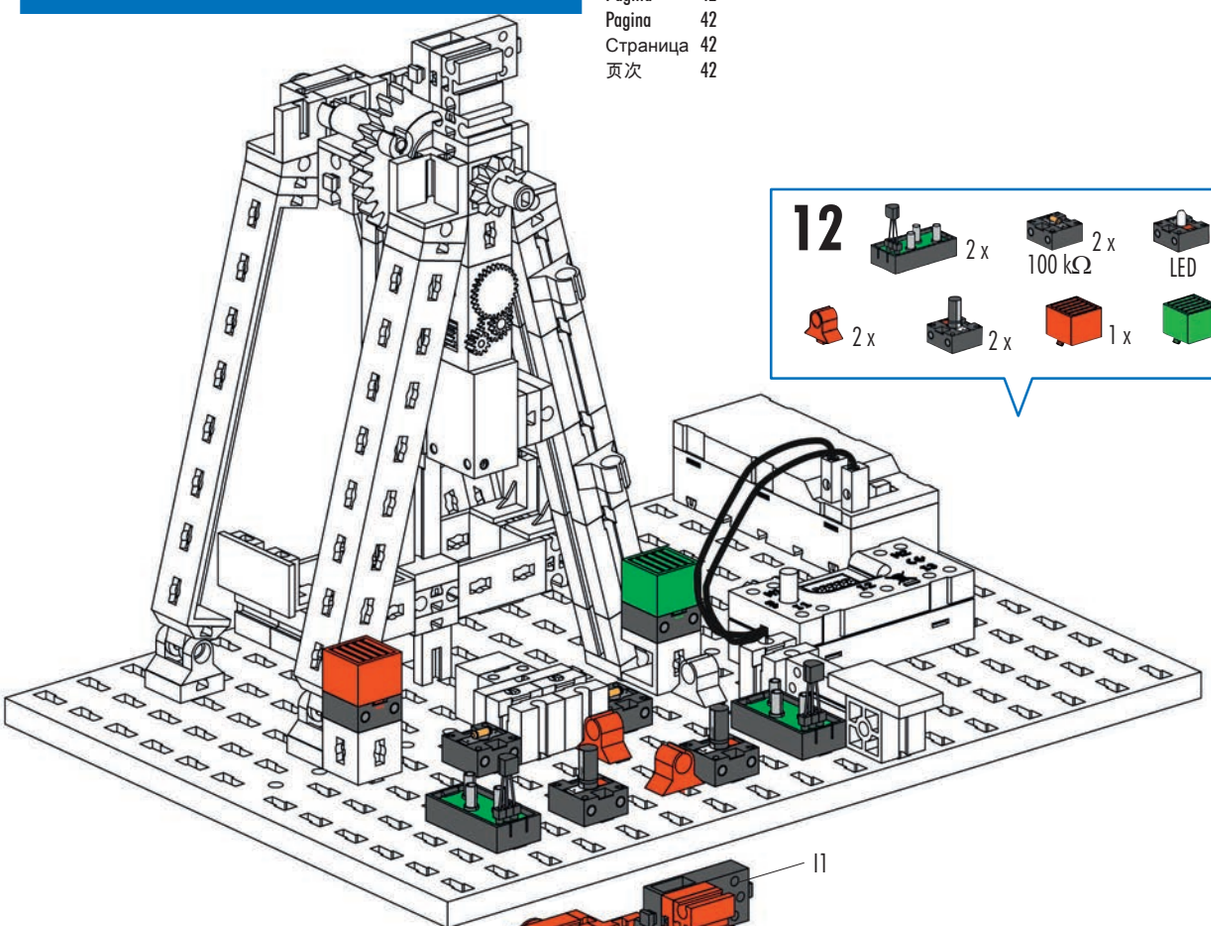

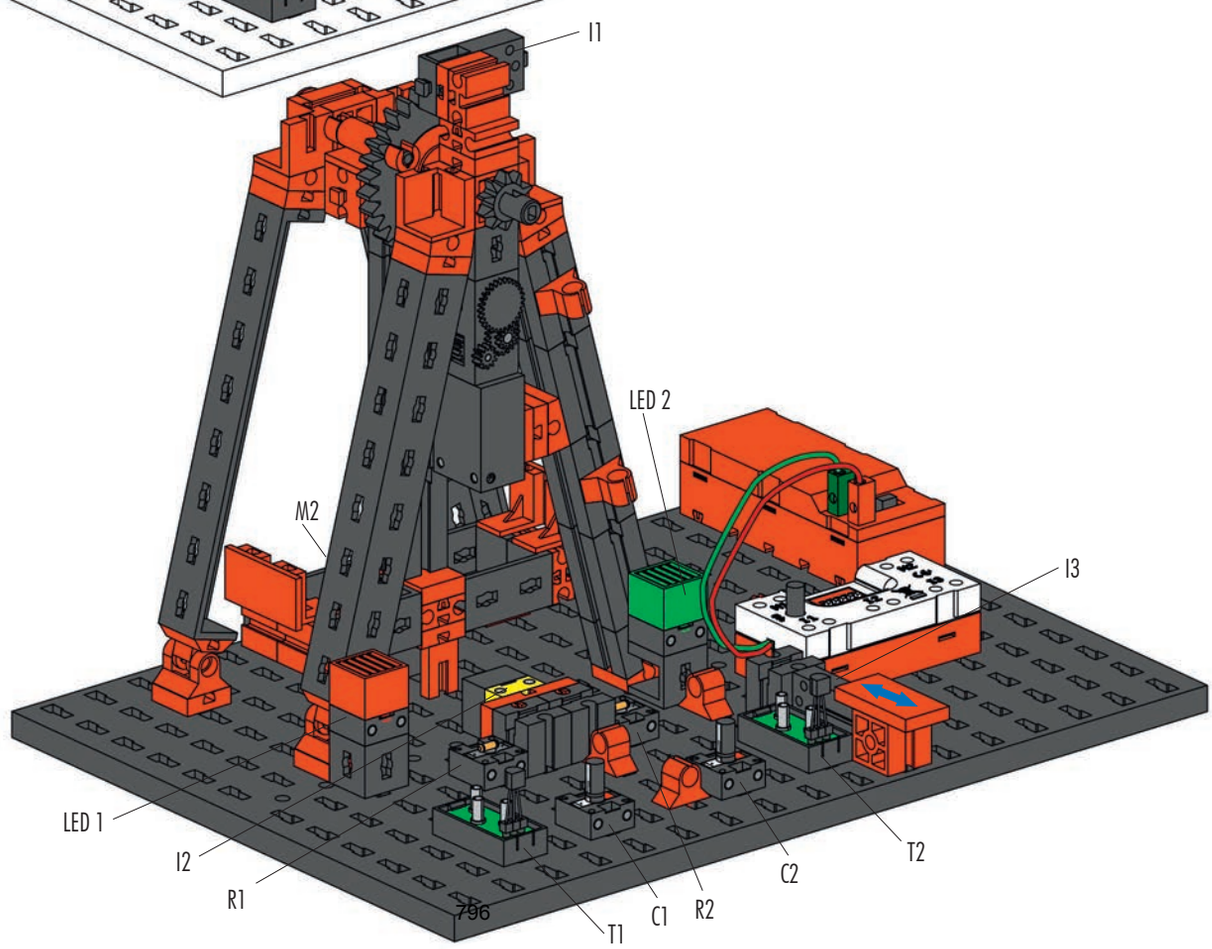

Schaltplan
Circuit diagram
Plan électrique

Schakelschema
Diagrama de circuitos
Plano elétrico de ligação

Schema elettrico
Схема подключения
电路图

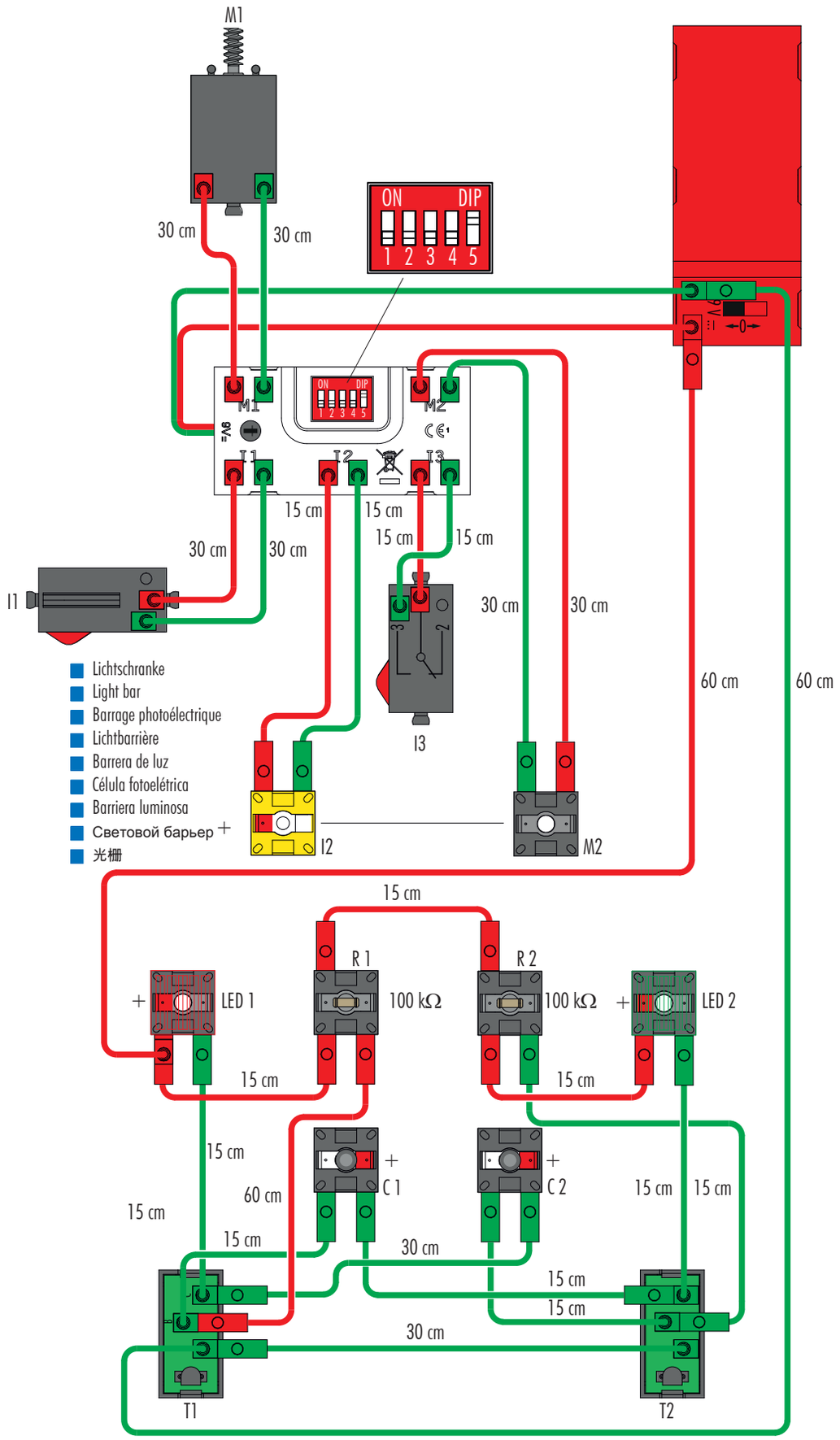

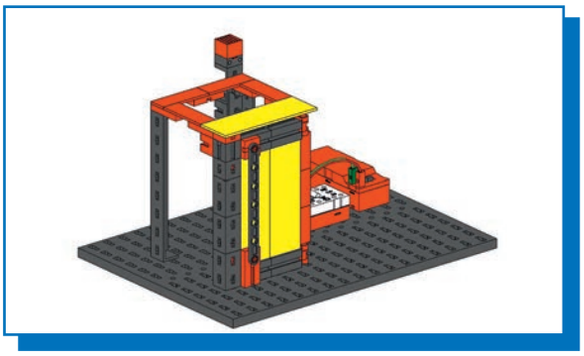

Alarmanlage
Alarm system
Système d'alarme
Alarminstallatie
Instalación de alarma
Equipamento de alarme
Impianto di allarme
Сигнализация
报警装置

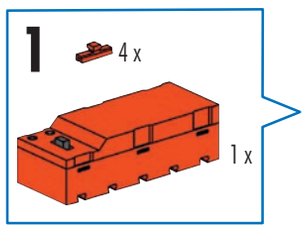

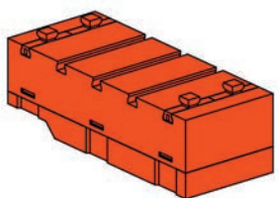

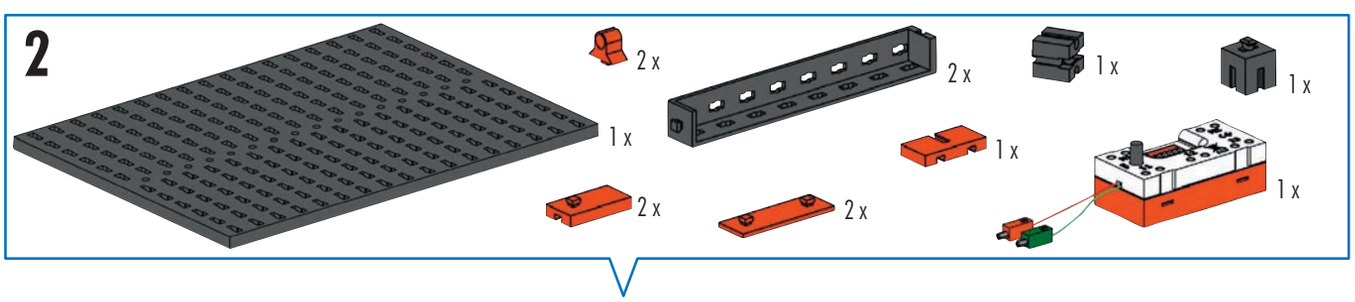

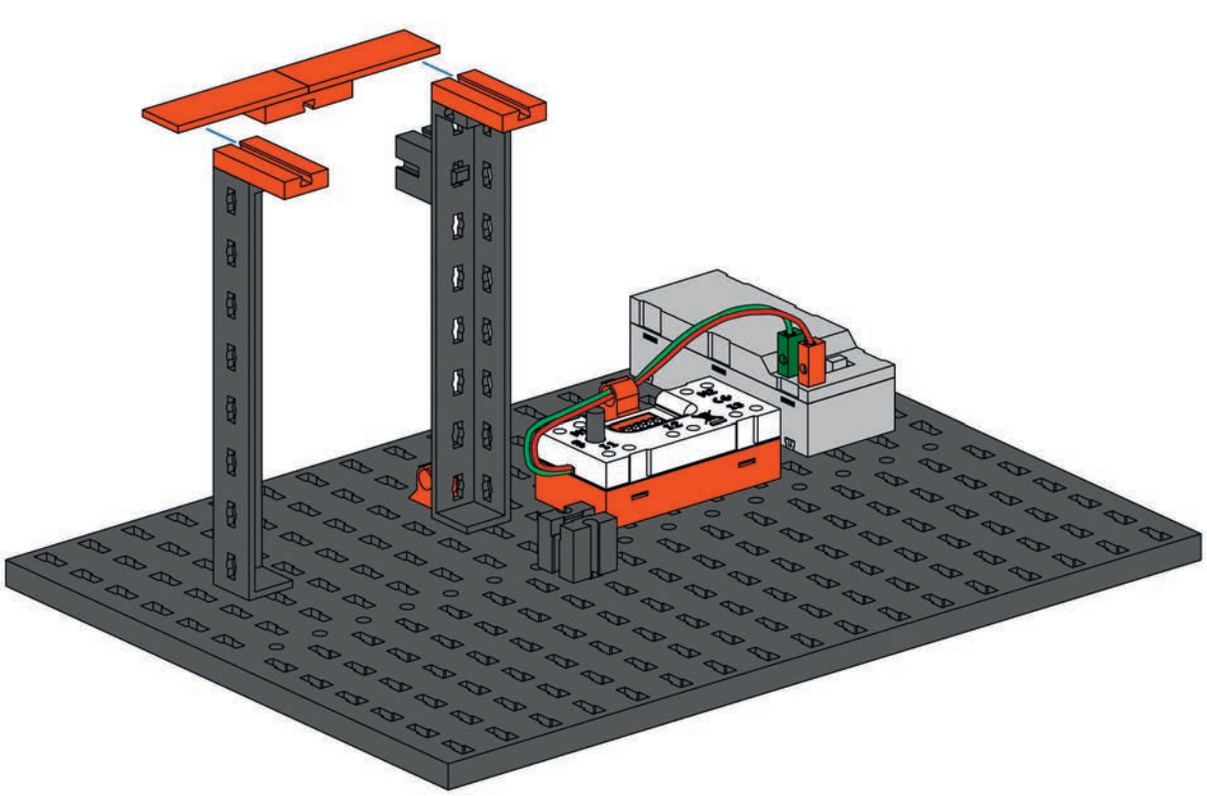

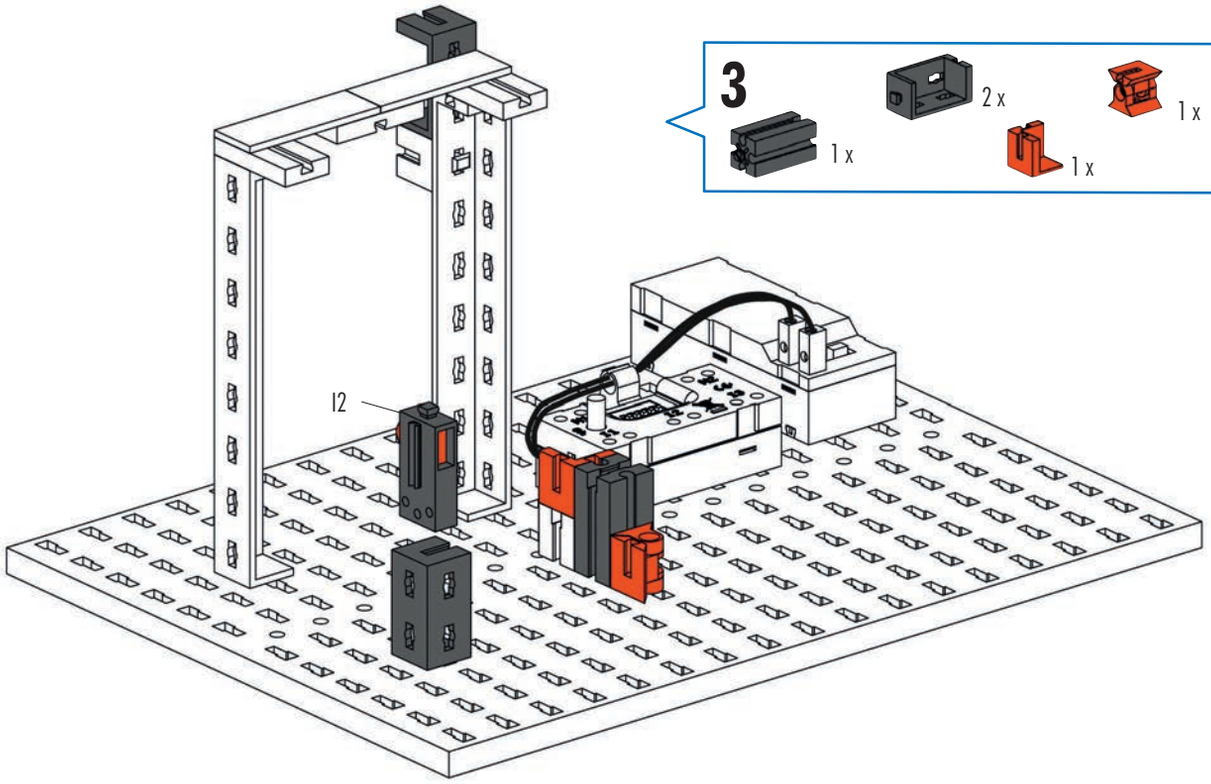
3
1 x
2 x
1 x
1 x
1 x
I2

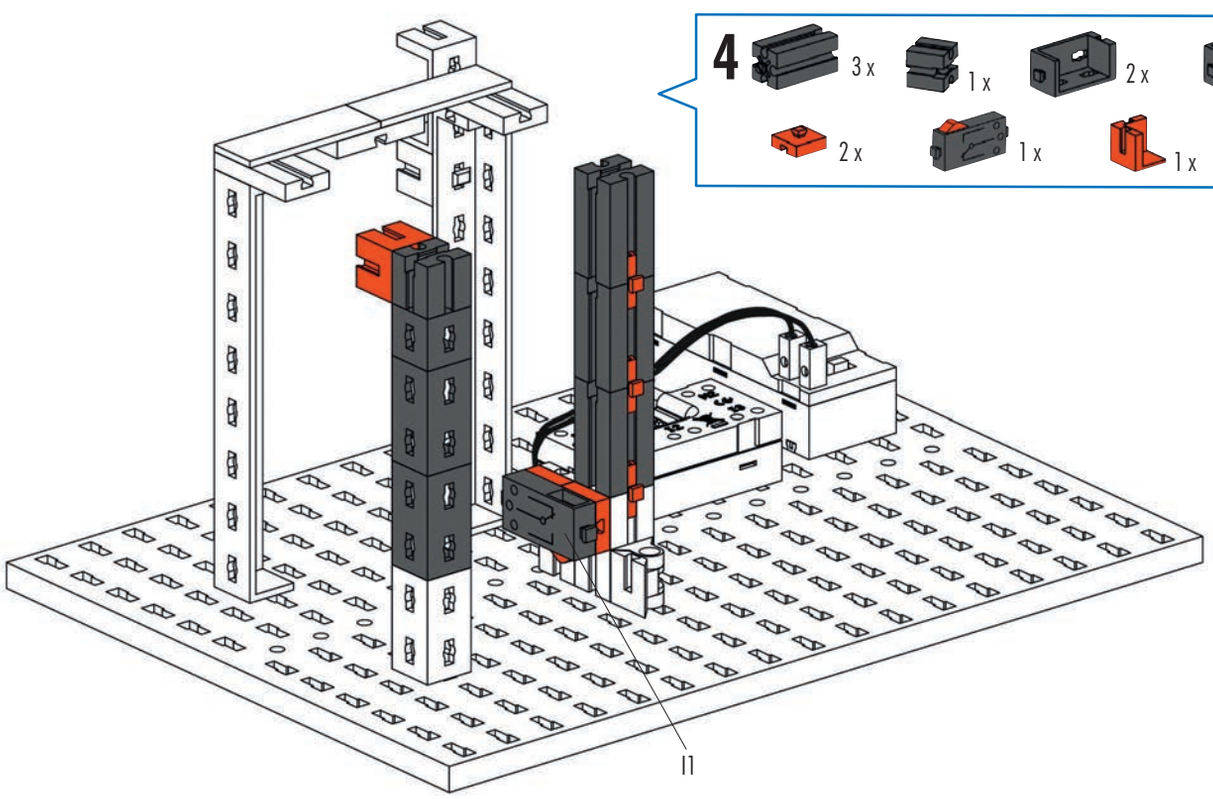
4
3 x
1 x
2 x
1 x
2 x
1 x
1 x
3 x
I1

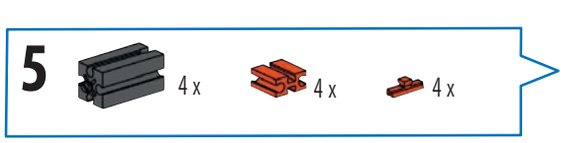
5
4 x
4 x
4 x

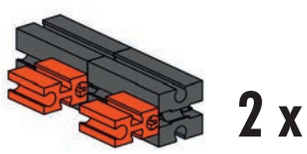
2 x

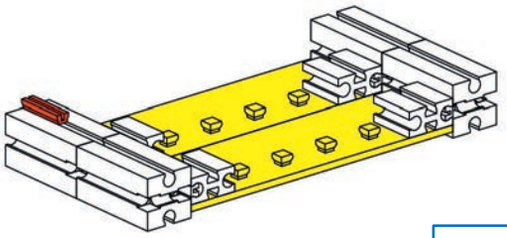

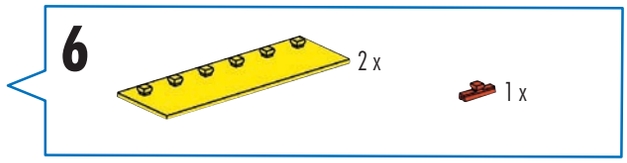

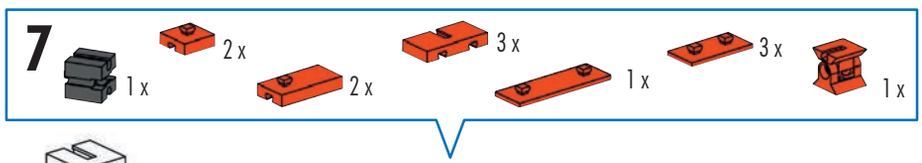

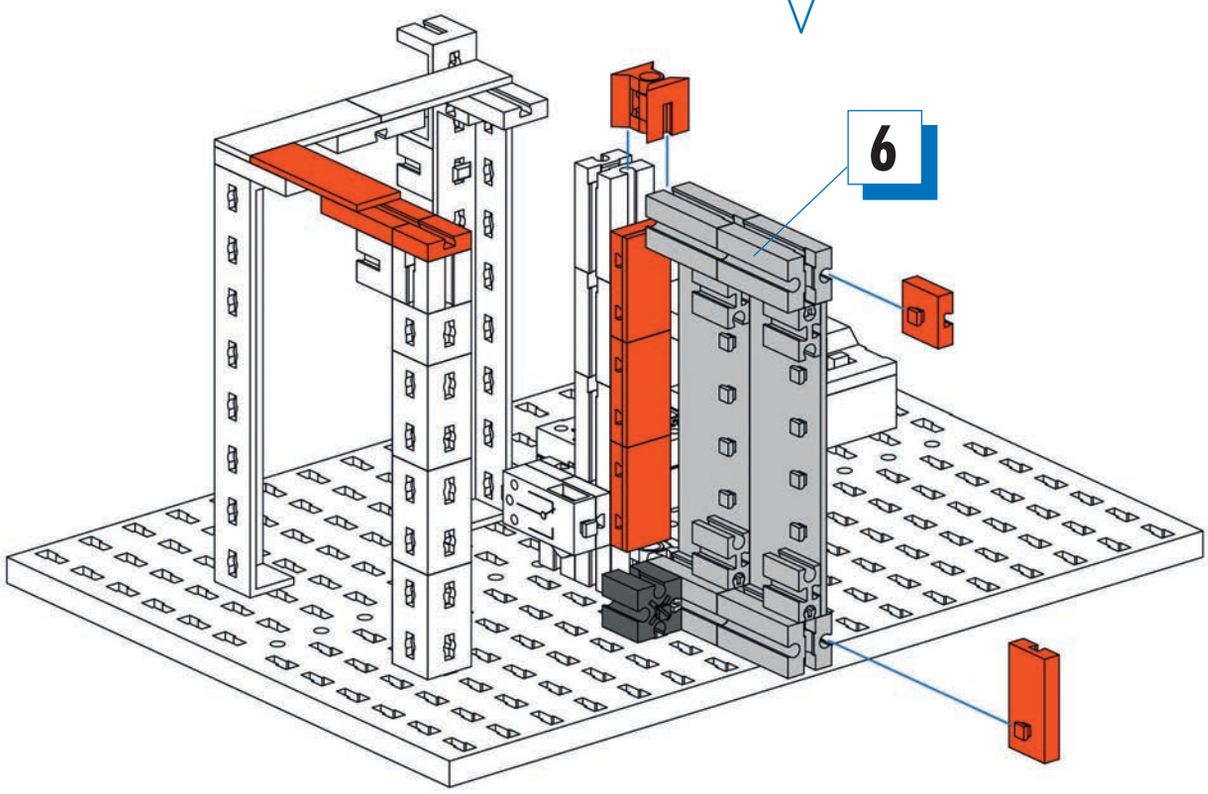

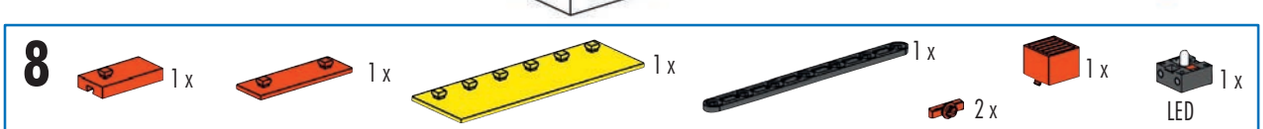

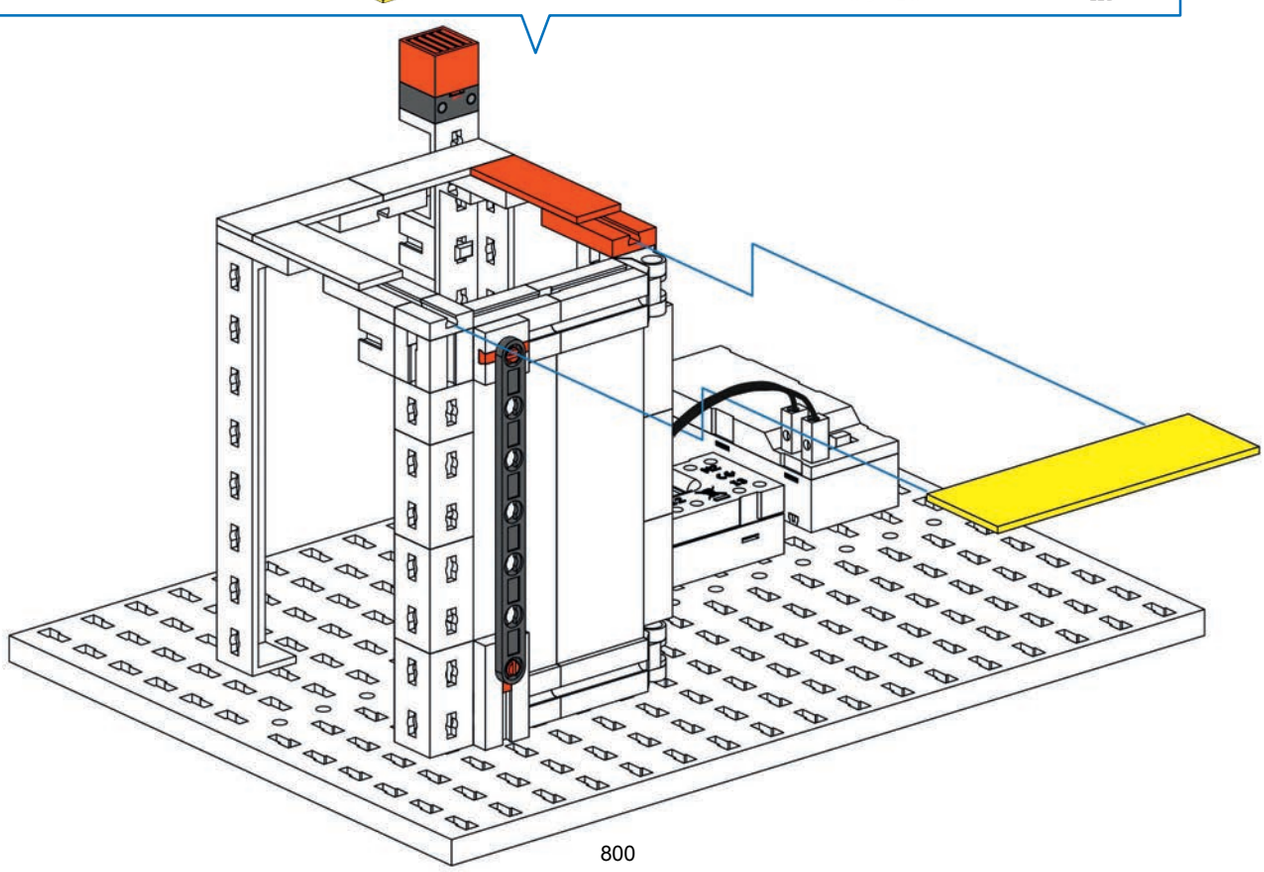

800

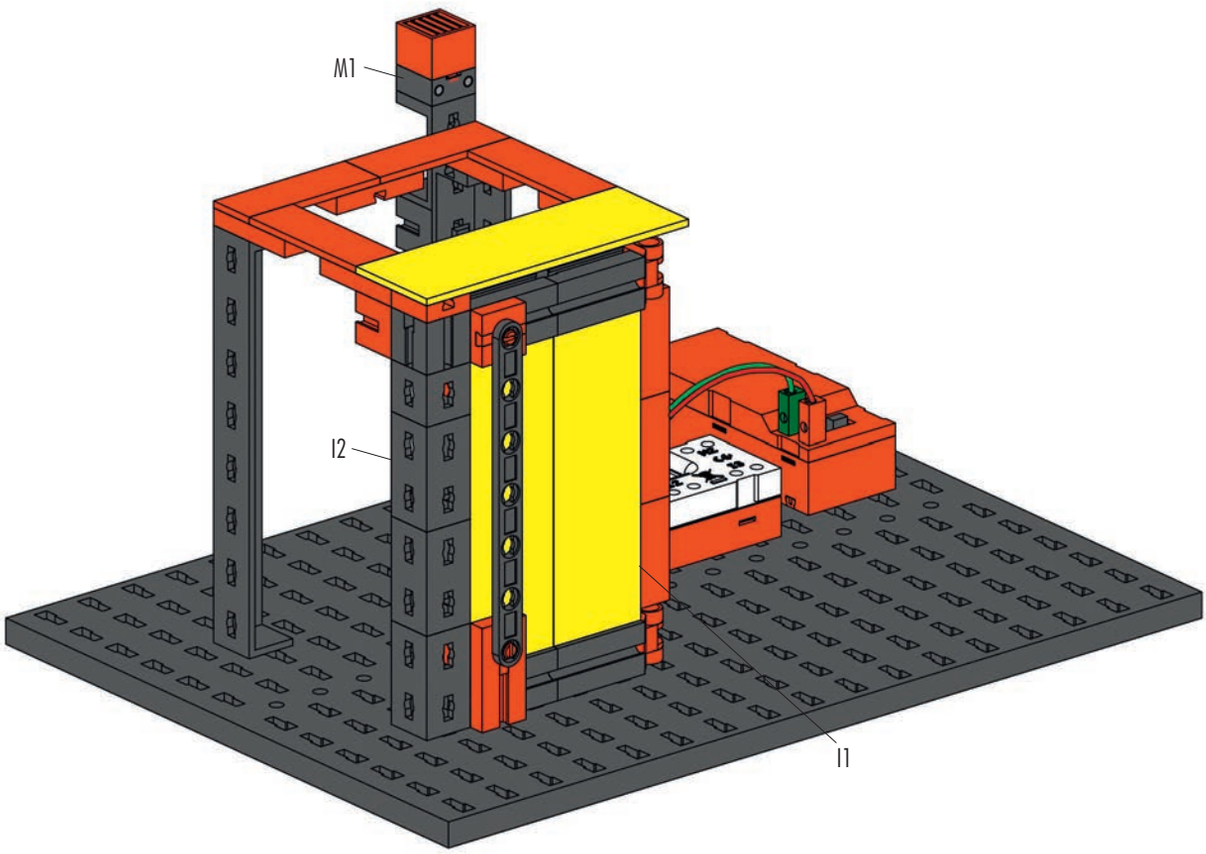

Schaltplan
Circuit diagram
Plan électrique

Schakelschema
Diagrama de circuitos
Plano elétrico de ligação

Schema elettrico
Схема подключения
电路图

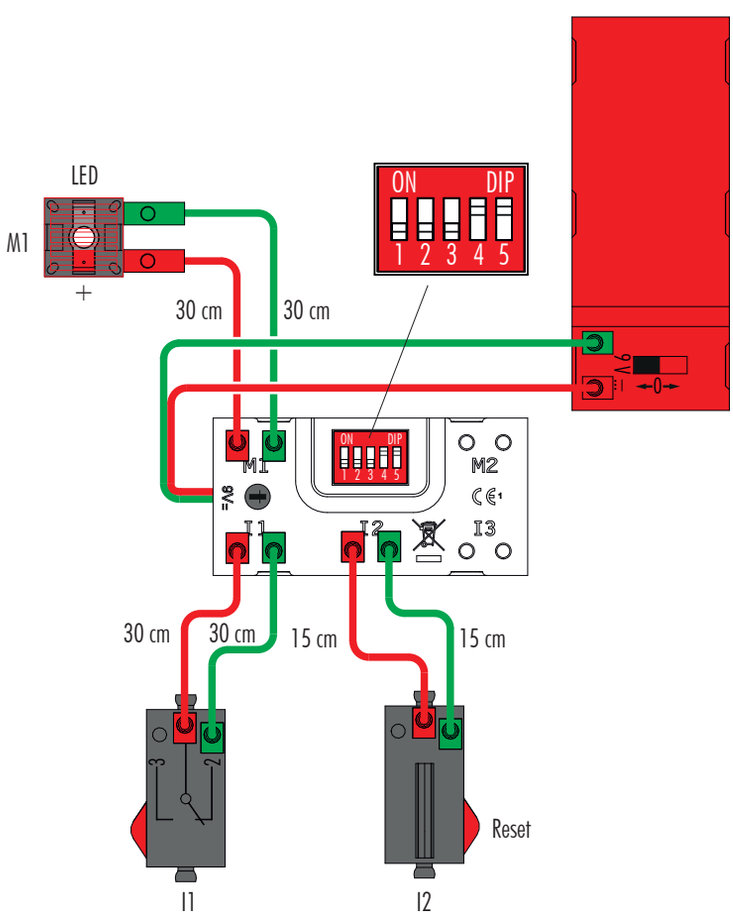

801

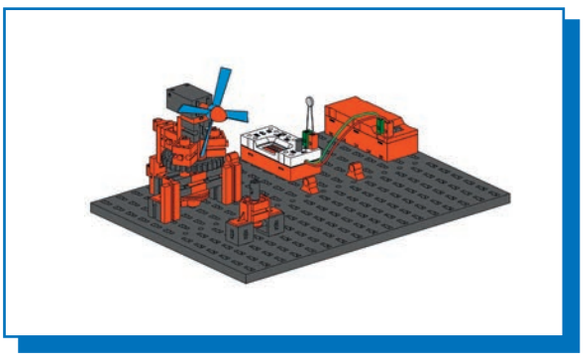

Ventilator
Ventilating fan
Ventilateur
Ventilator
Ventilador
Ventilador
Ventilatore
Вентилятор
风扇

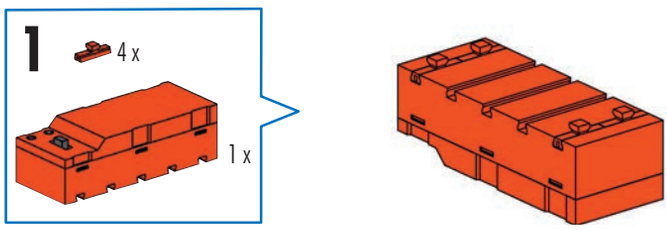

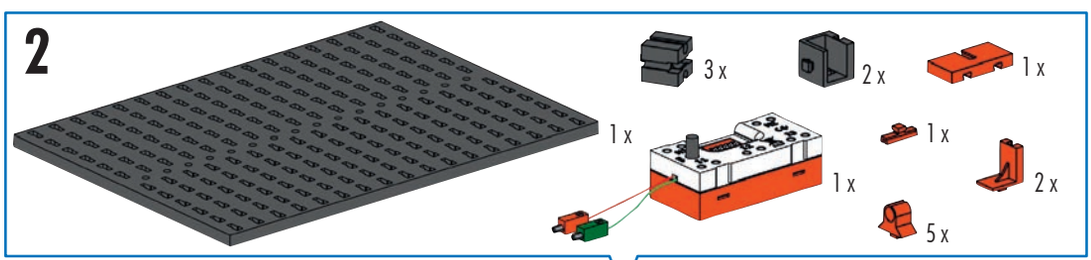

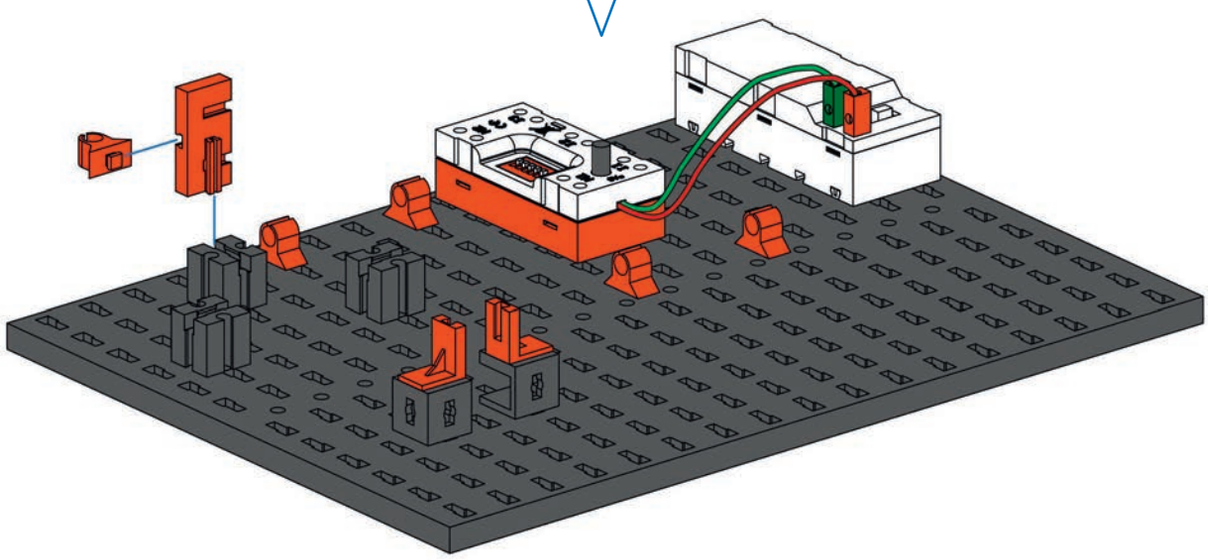

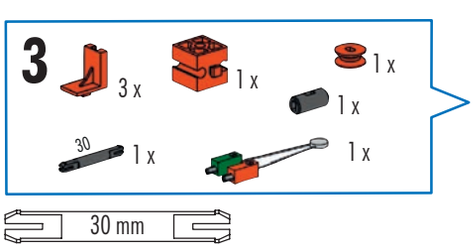

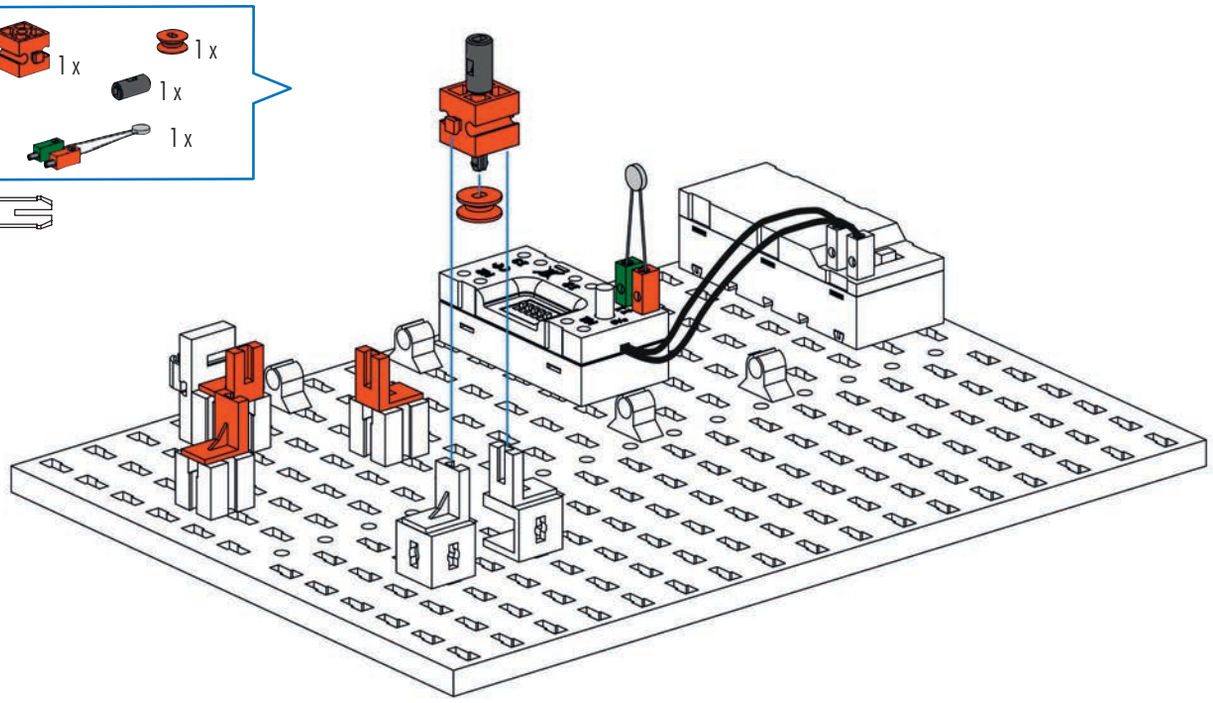

802

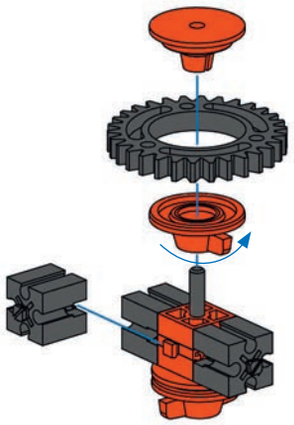

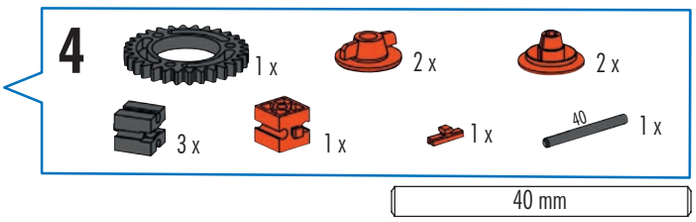
4
1 x
2 x
2 x
3 x
1 x
1 x
40
1 x
40 mm

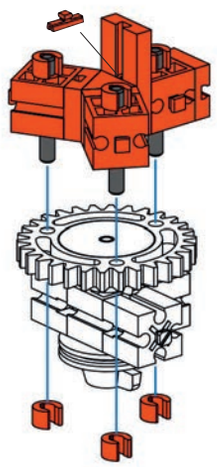

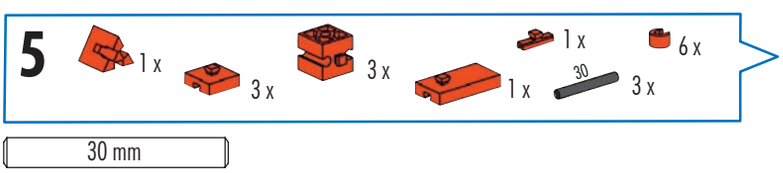
5
1 x
3 x
3 x
1 x
1 x
30
3 x
6 x
30 mm

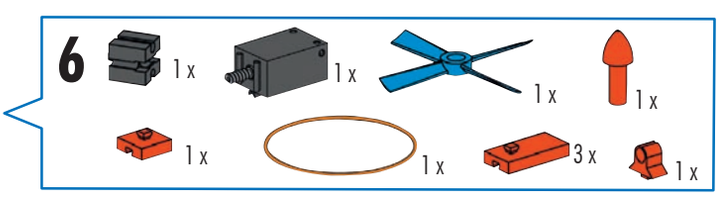
6
1 x
1 x
1 x
1 x
1 x
1 x
3 x
1 x

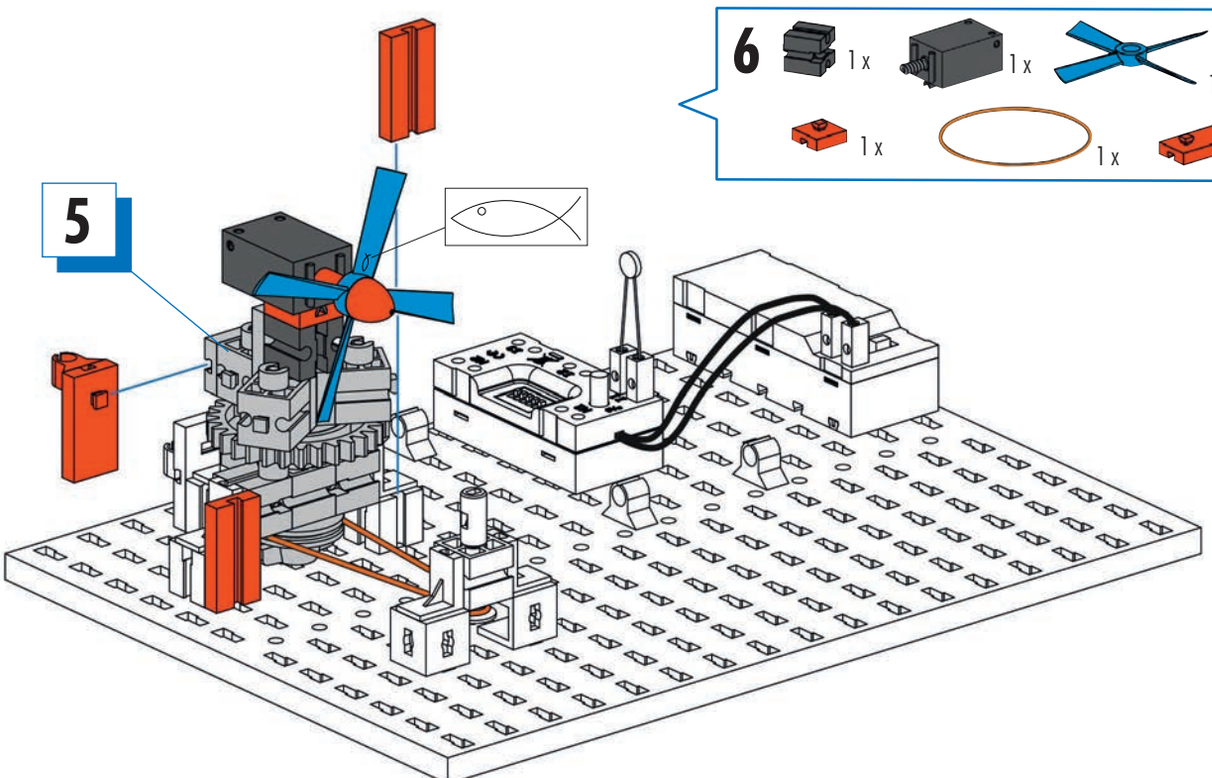
5

803

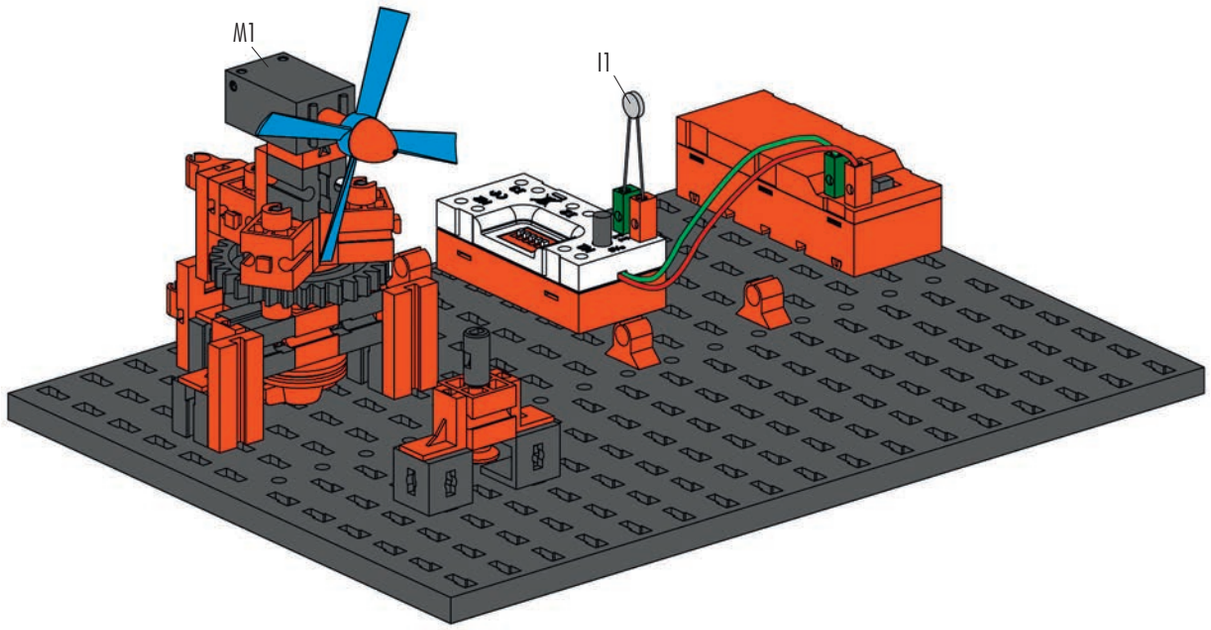

Schaltplan
Circuit diagram
Plan électrique

Schakelschema
Diagrama de circuitos
Plano elétrico de ligação

Schema elettrico
Схема подключения
电路图

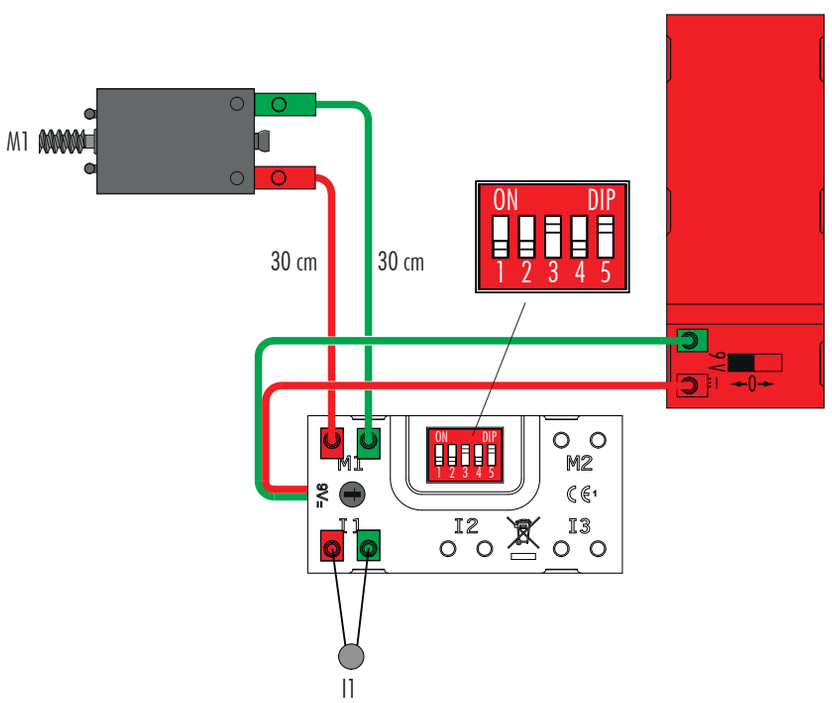

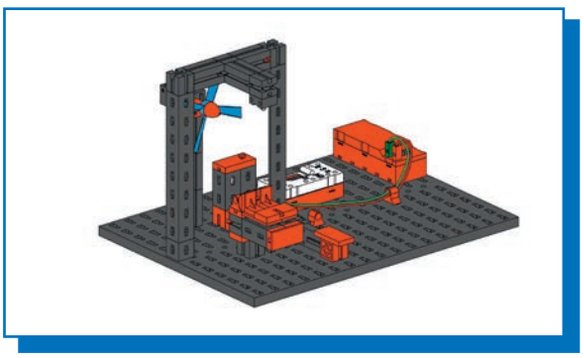

Badezimmerlüftung
Bathroom fan
Ventilation de la salle de bain

Badkamerverlichting
Ventilación de cuarto de baño
Ventilação de banheiro

Aeratore per bagno
Вентиляция ванной комнаты
浴室换气扇

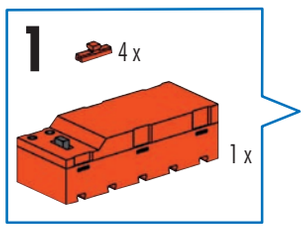

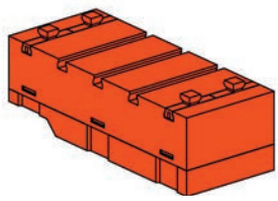

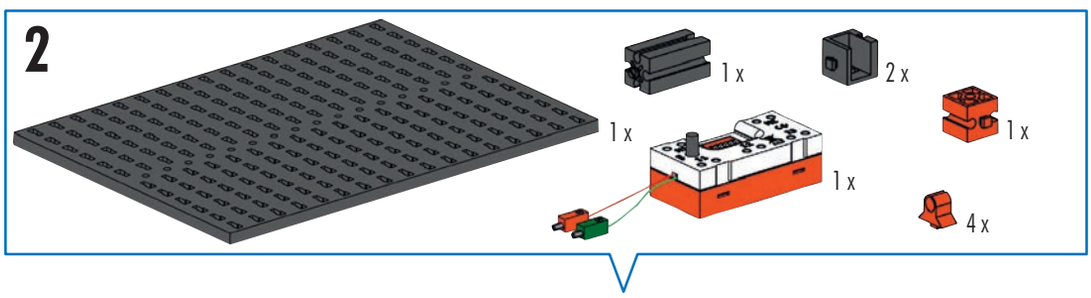

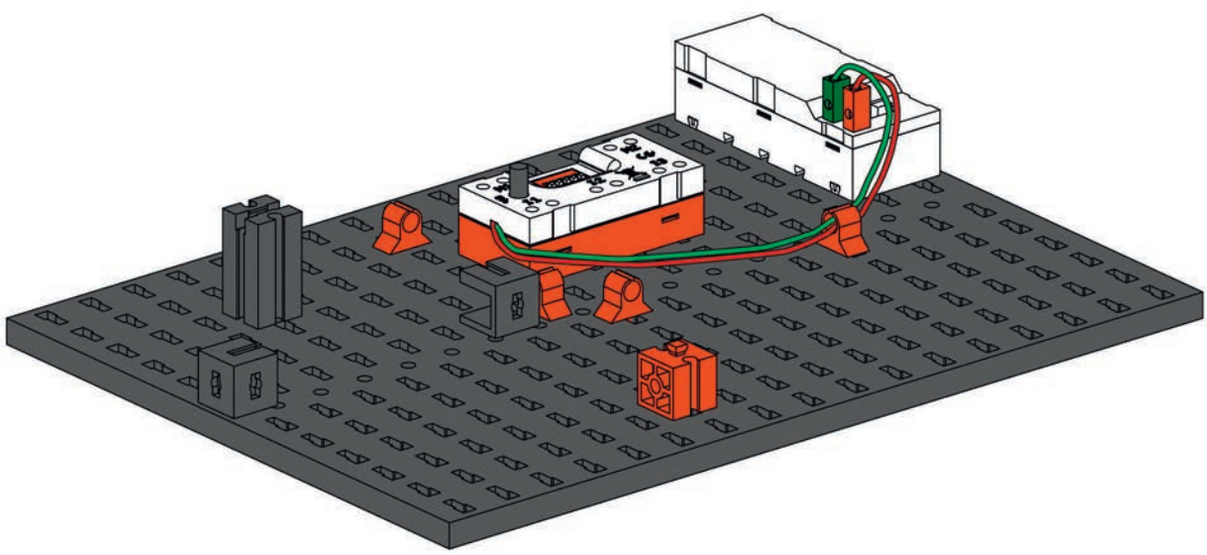

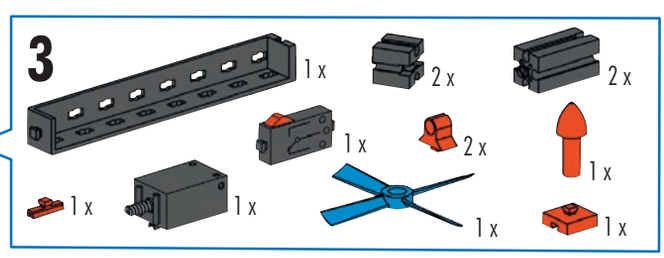

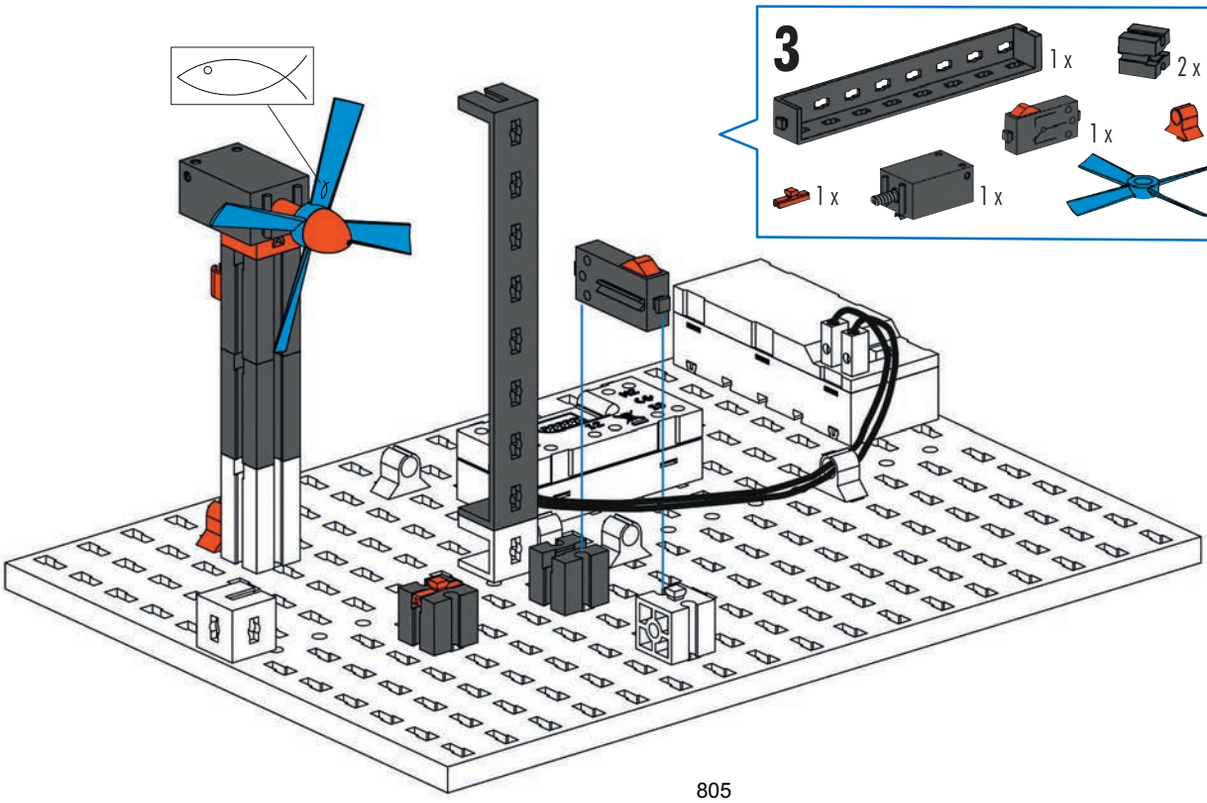

805

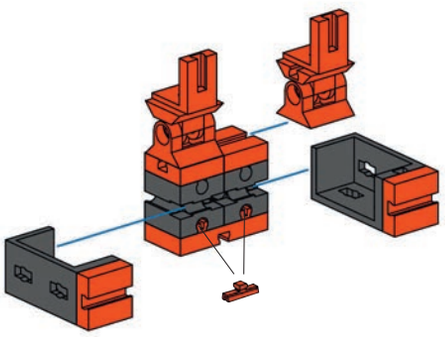

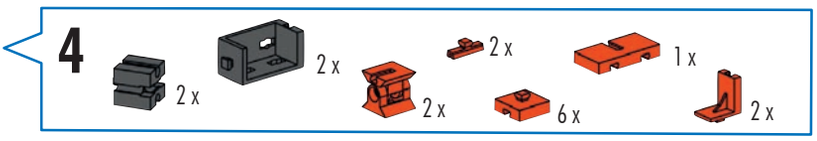

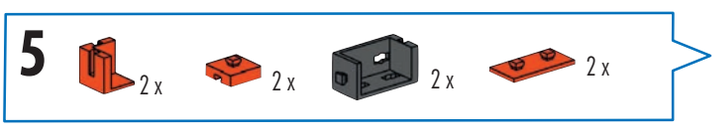

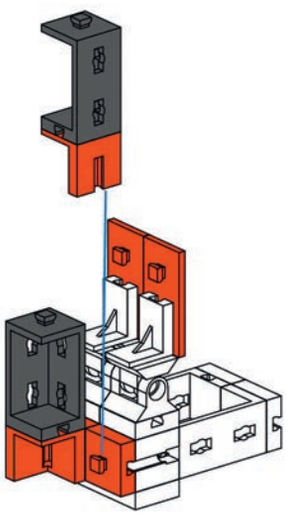

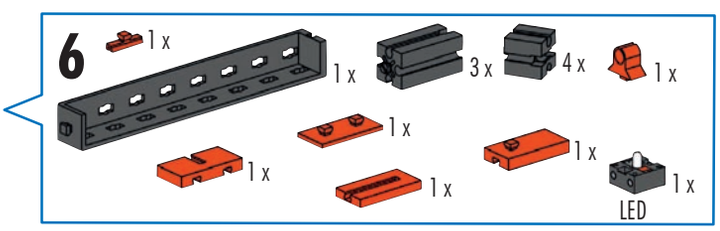

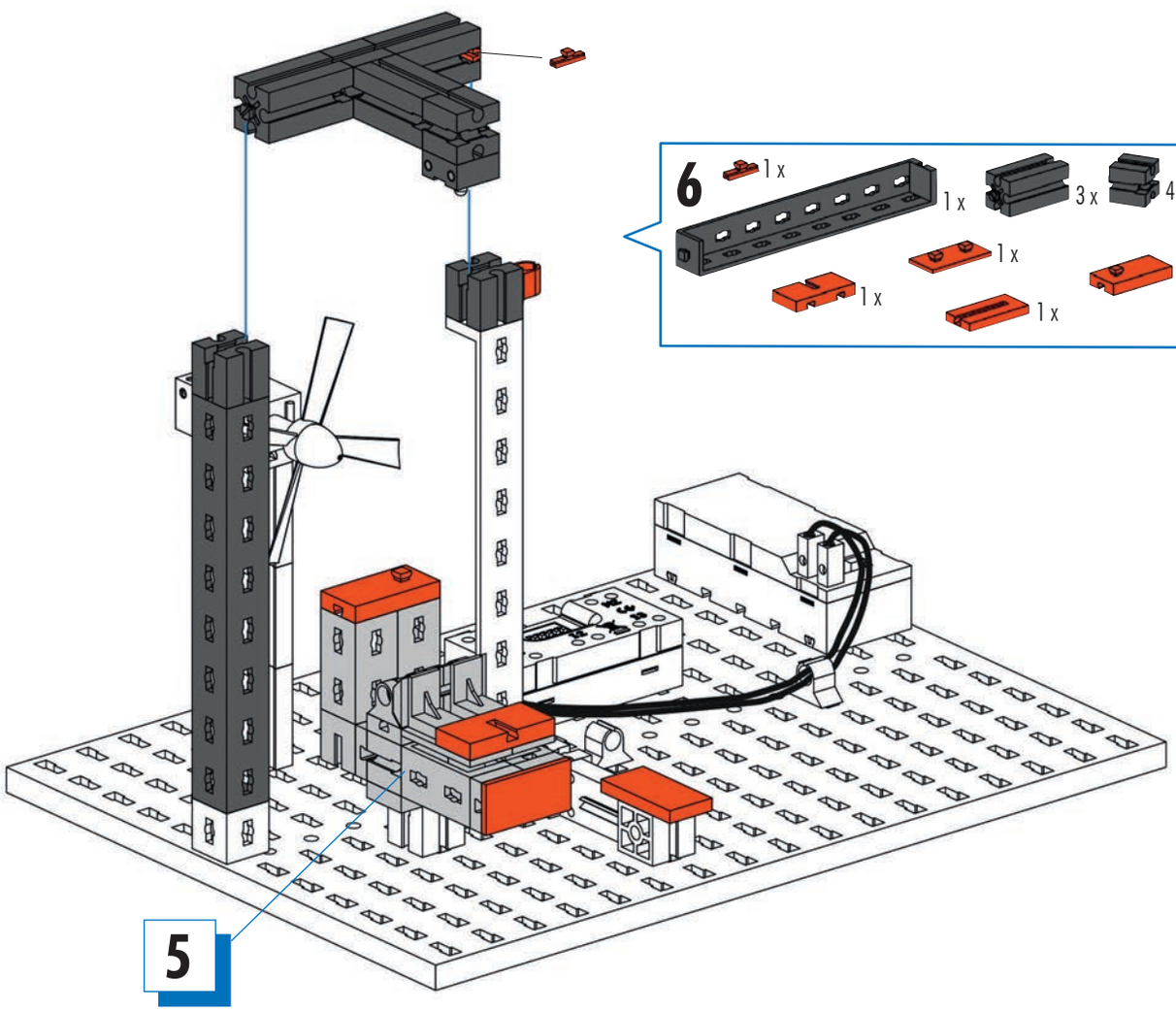

806

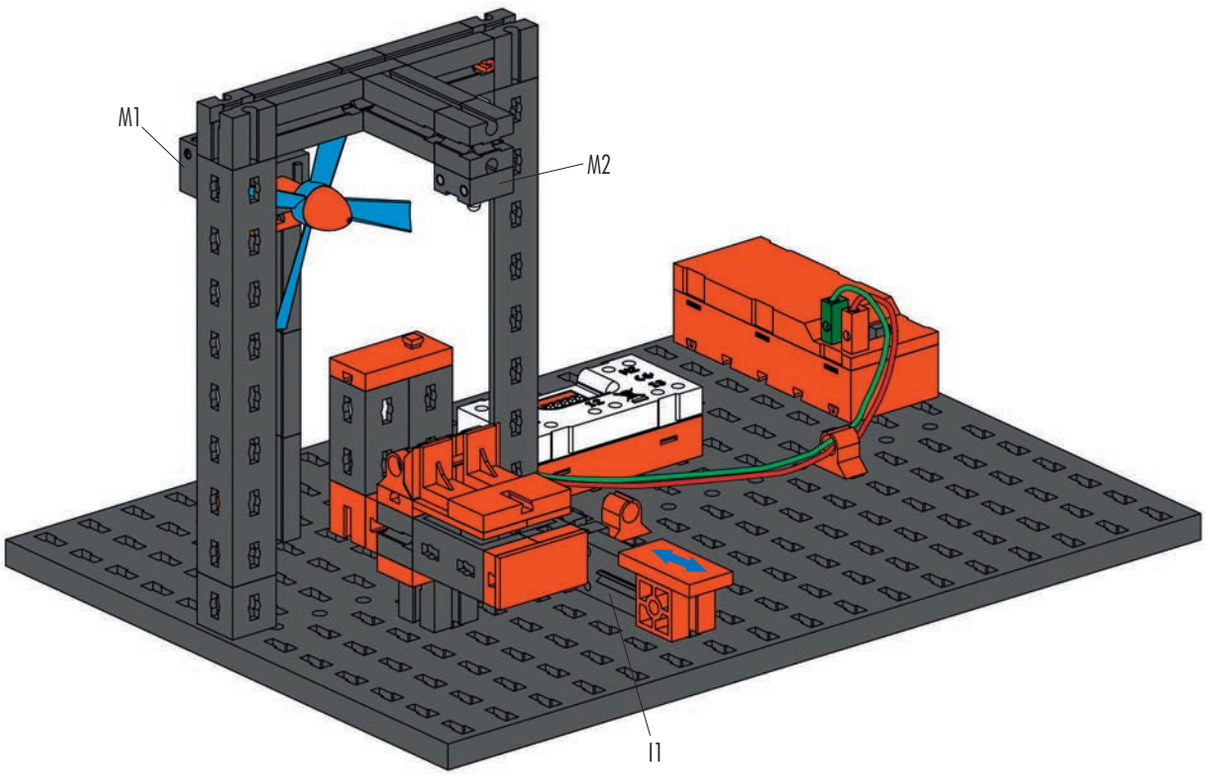

Schaltplan
Circuit diagram
Plan électrique

Schakelschema
Diagrama de circuitos
Plano elétrico de ligação

Schema elettrico
Схема подключения
电路图

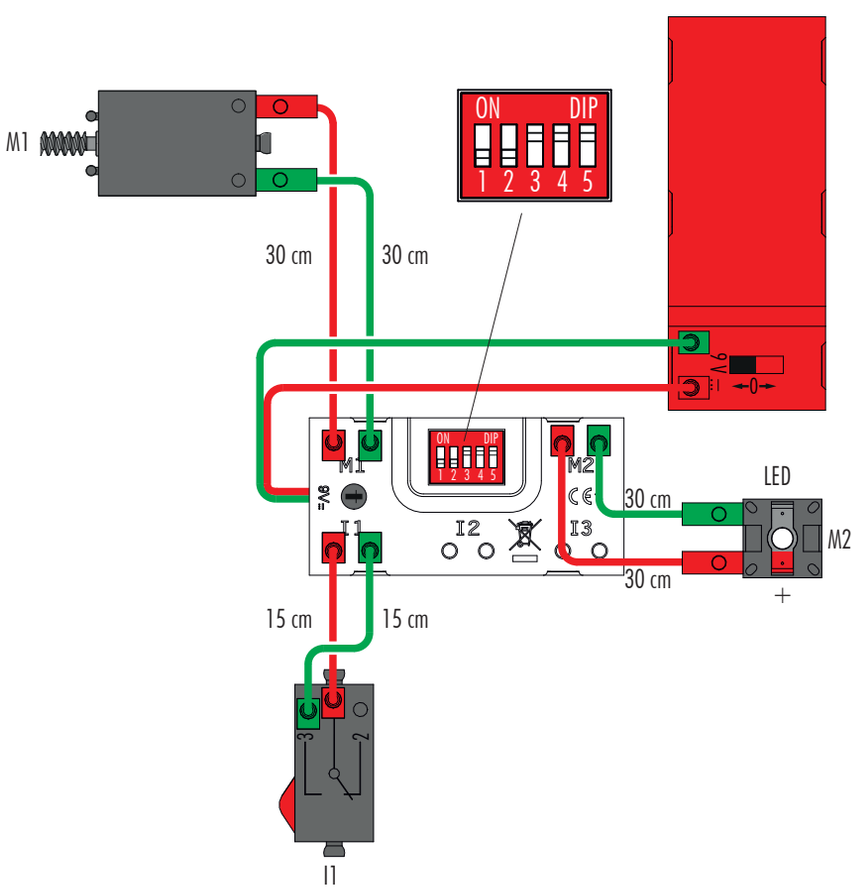

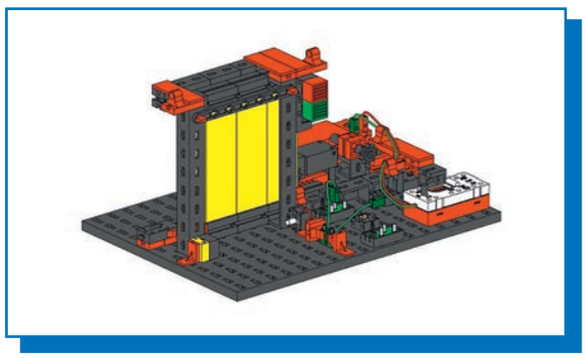

Schiebetür
Sliding door
Porte coulissante
Schuifdeur
Puerta corrediza
Porta corrediça
Porta scorrevole
Сдвижная дверь
滑门

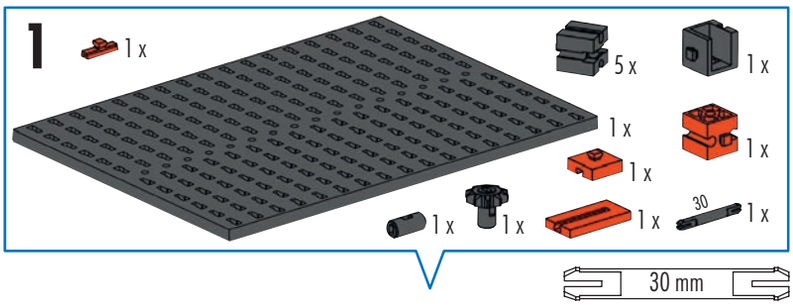

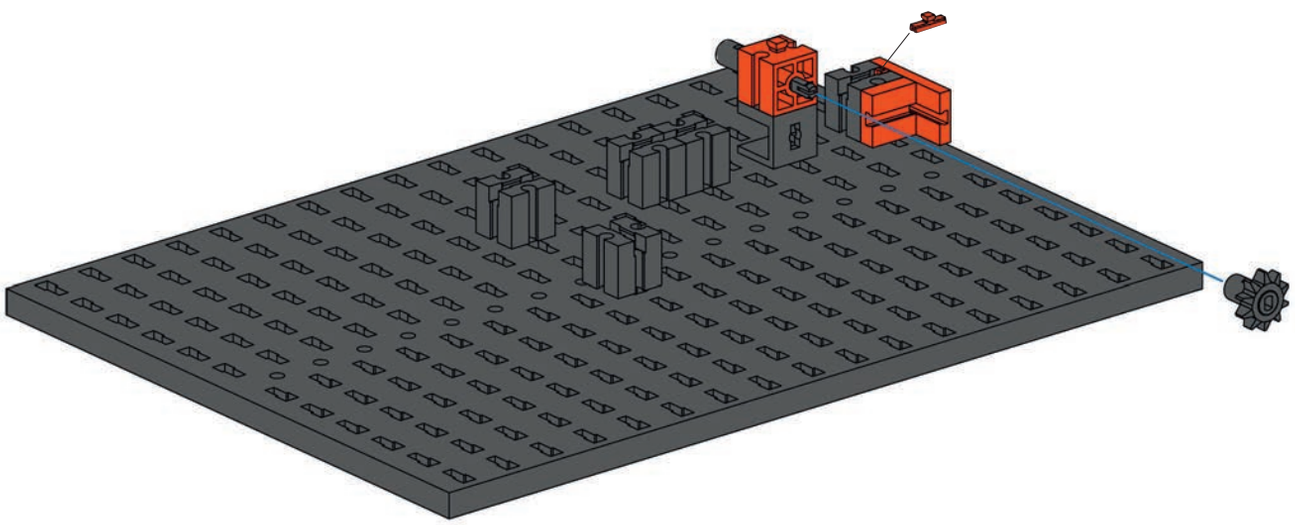

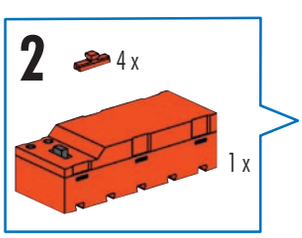

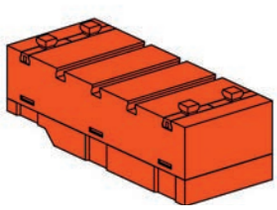

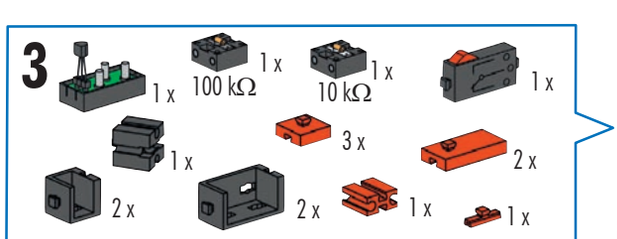

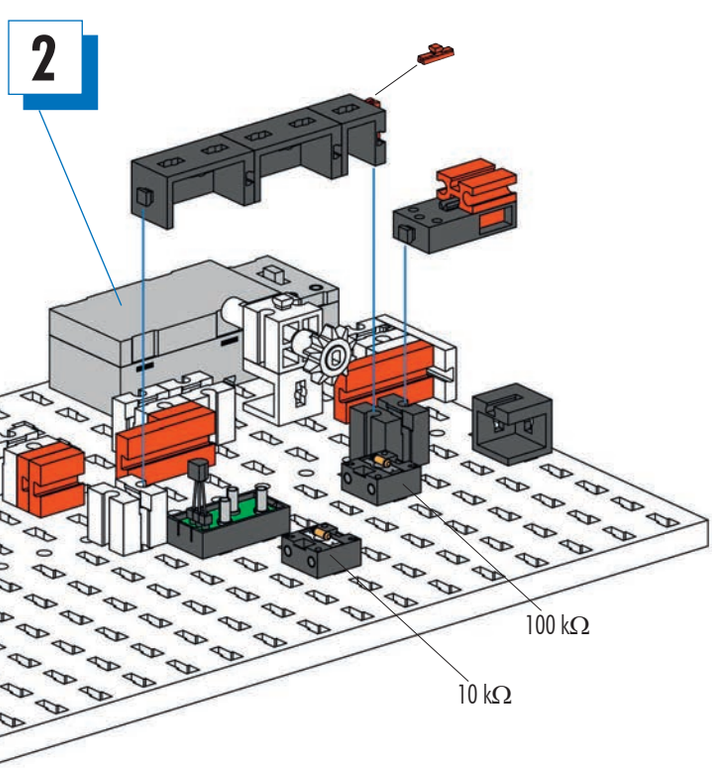

808

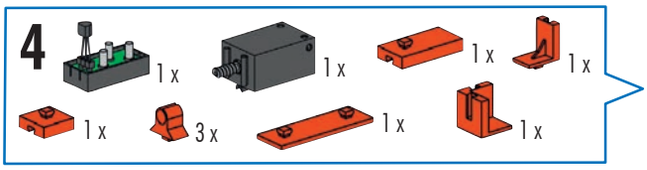
4
1 x
1 x
1 x
1 x
1 x
3 x
1 x
1 x

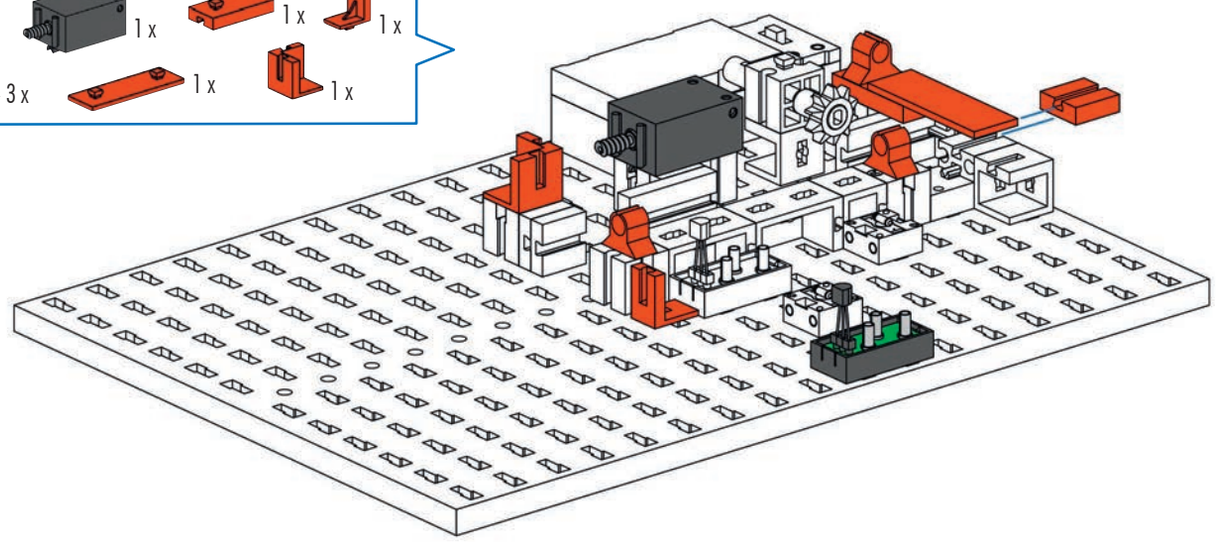

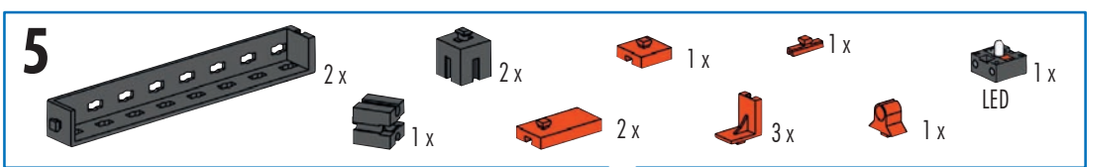
5
2 x
2 x
1 x
1 x
1 x
LED
1 x
2 x
3 x
1 x

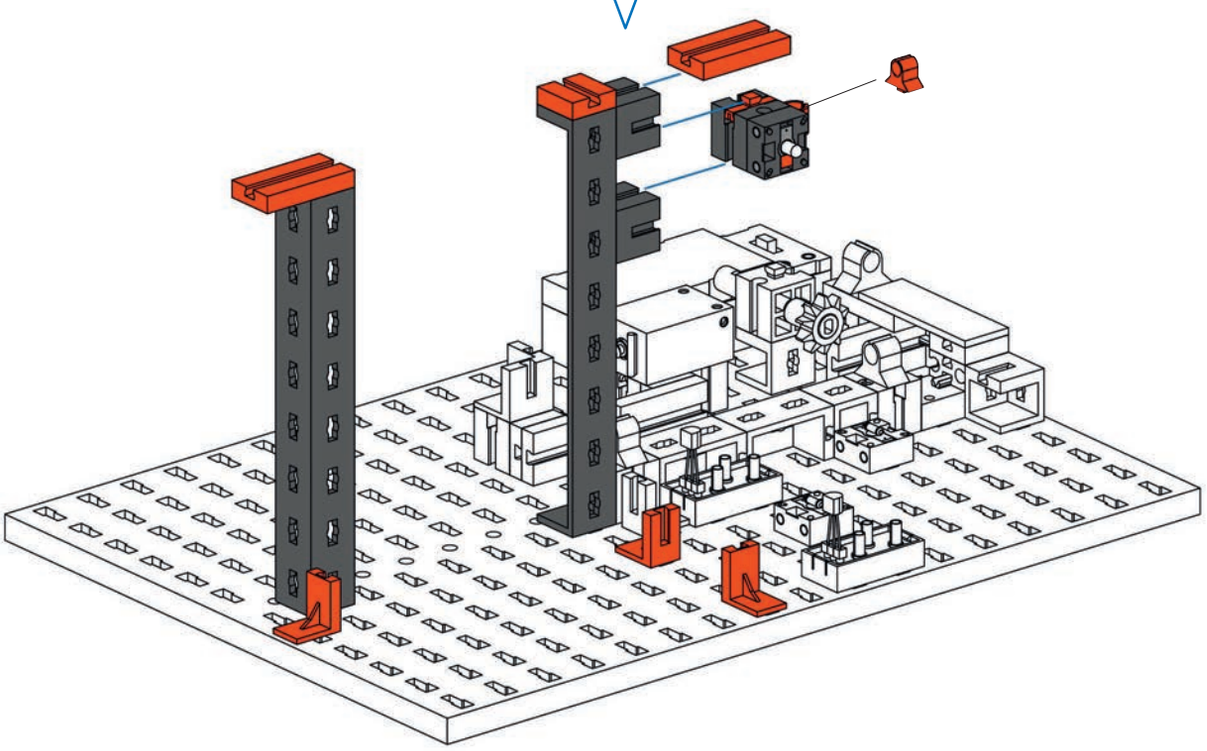

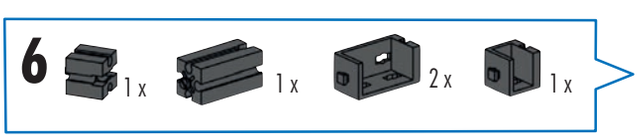
6
1 x
1 x
2 x
1 x

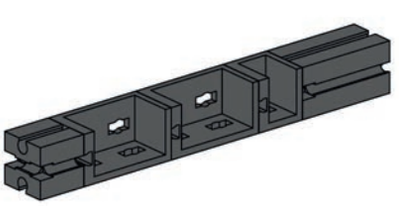

7

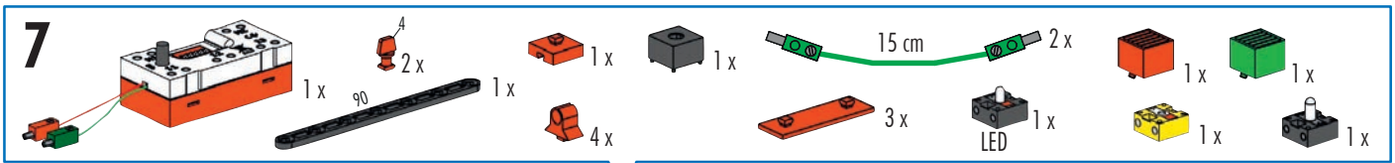

Linsenlampe
Lens tip lamp
Ampoule lentille
Lenslampje
Lampada lenticolare
Lâmpada de formato lenticular
Lampada lenticolare
Лампа с линзой
透镜灯

6

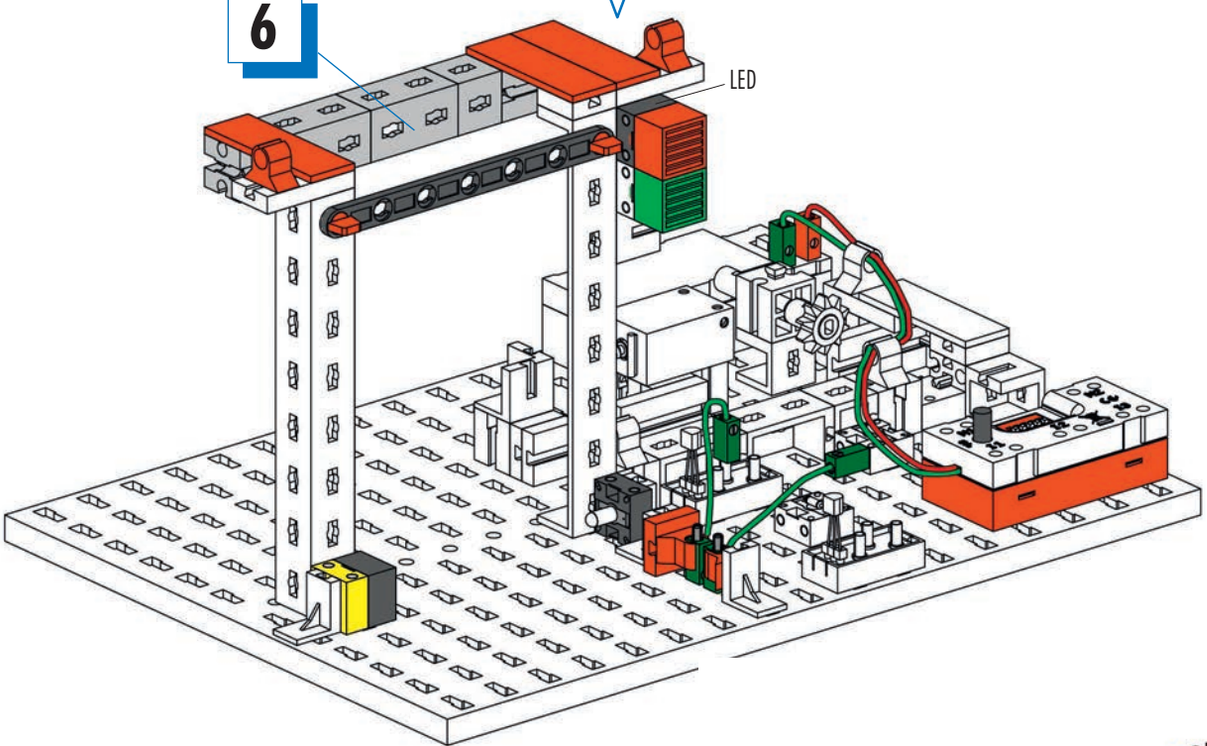

8

4 x 2 x 4 x 3 x

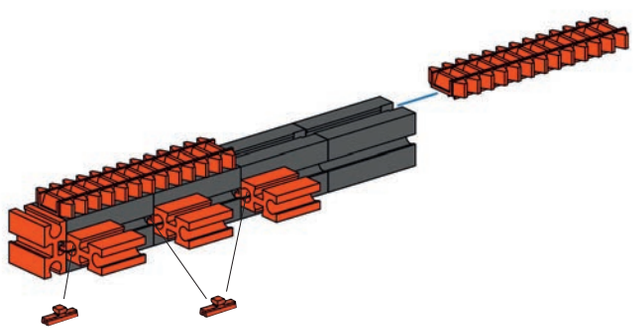

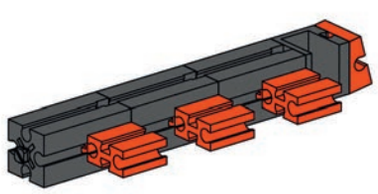

9

3 x 1 x 15° 1 x 3 x 3 x

10

3 x 1 x 1 x

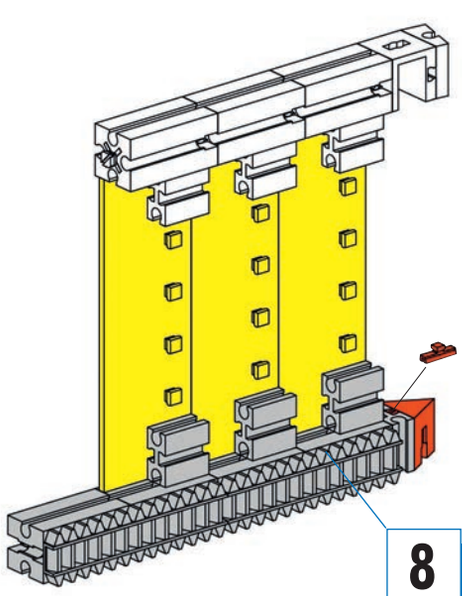

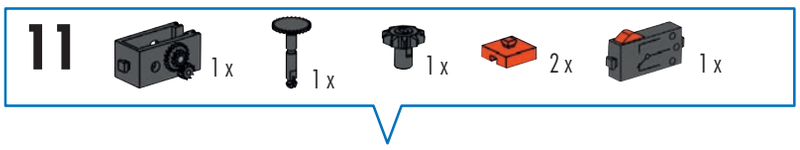
11
1 x
1 x
1 x
2 x
1 x

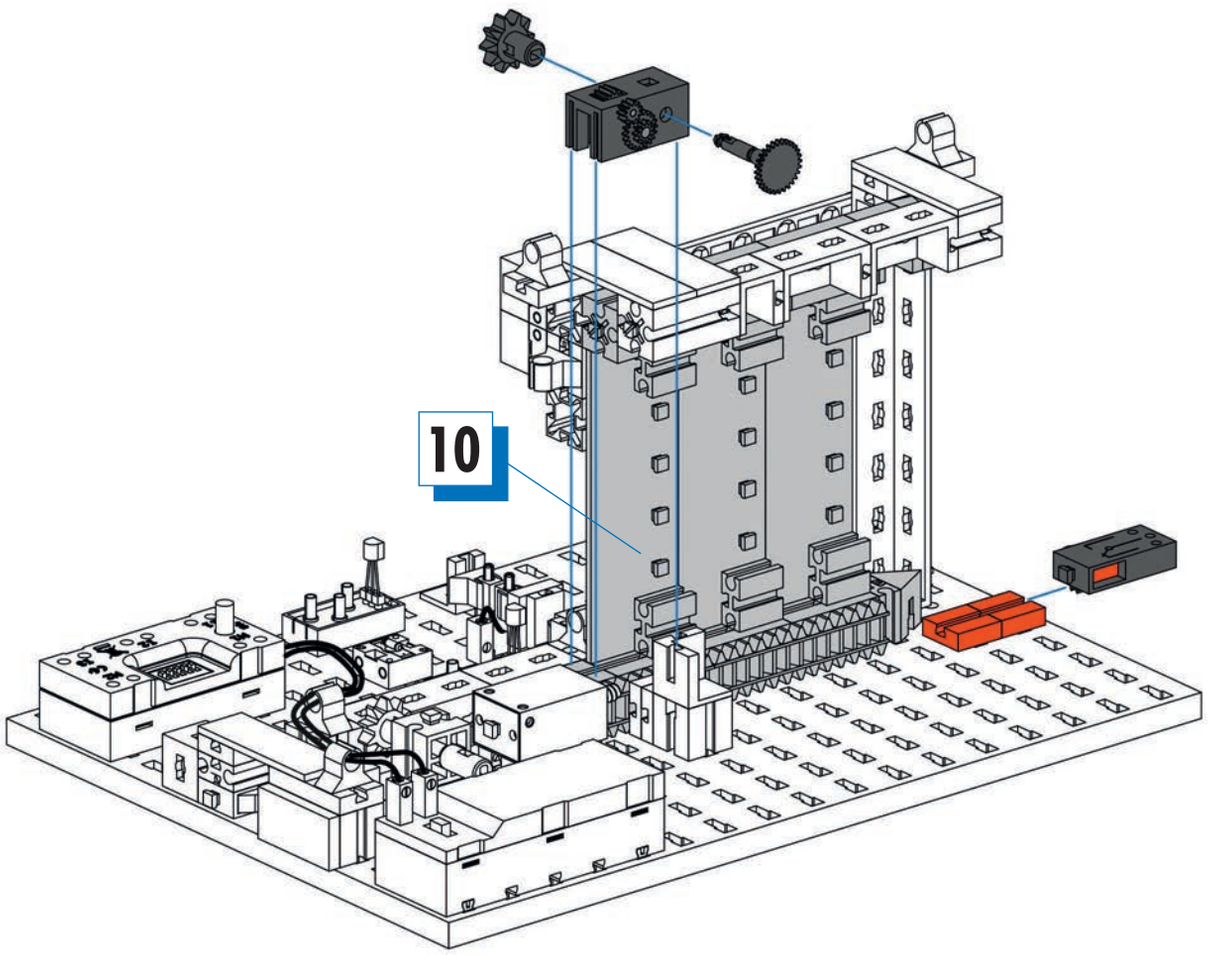
10

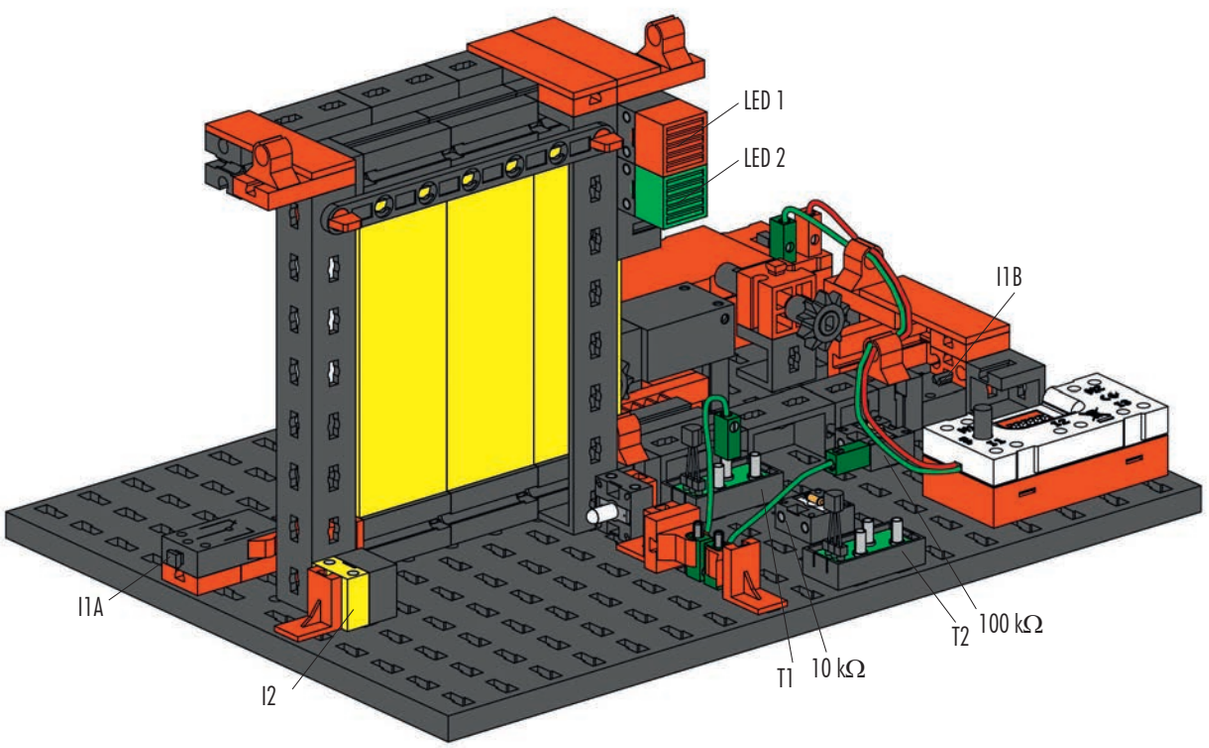
LED 1
LED 2
I1B
I1A
I2
T1
10 kΩ
T2
100 kΩ

Schaltplan
Circuit diagram
Plan électrique

Schakelschema
Diagrama de circuitos
Plano elétrico de ligação

Schema elettrico
Схема подключения
电路图

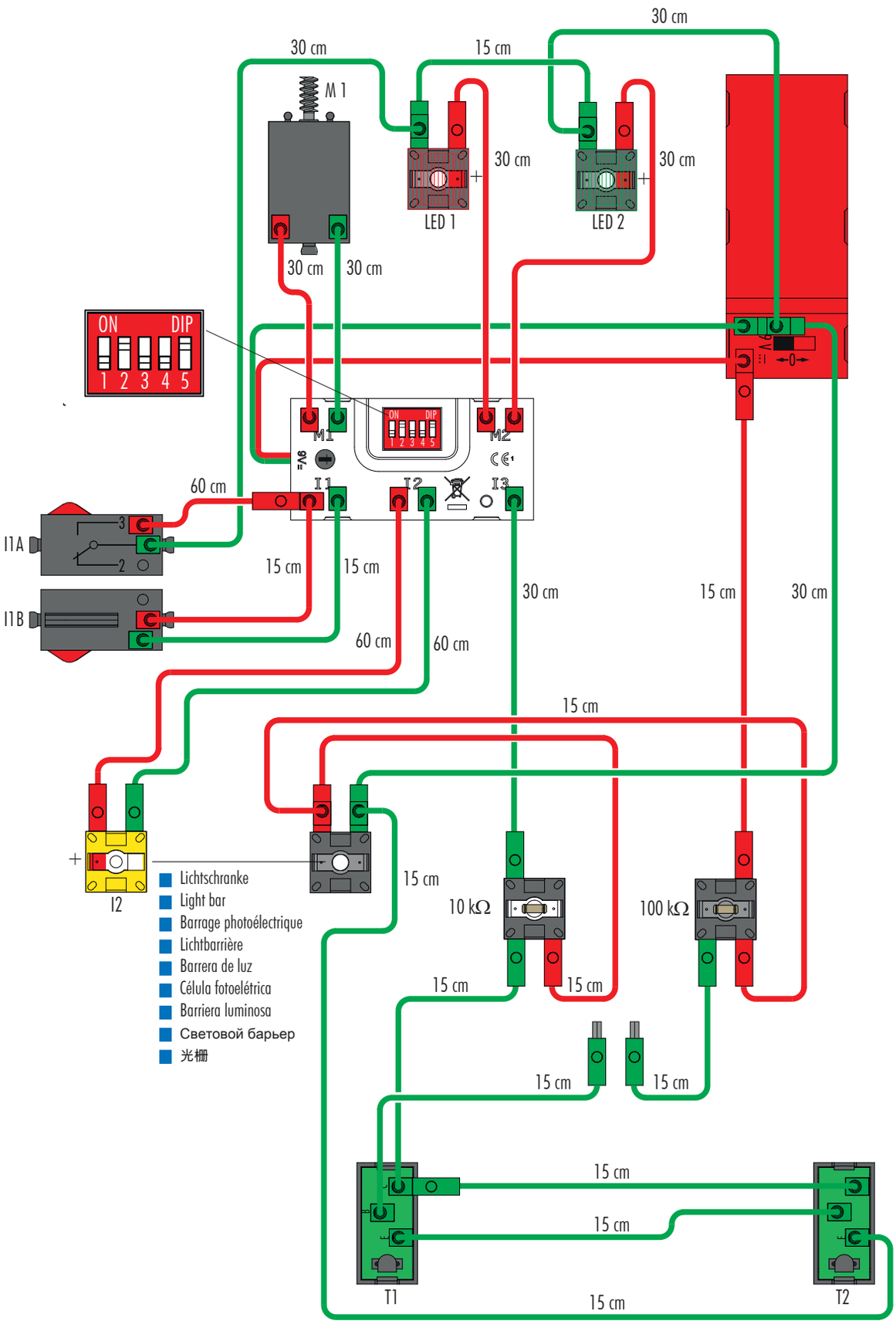

fischertechnik

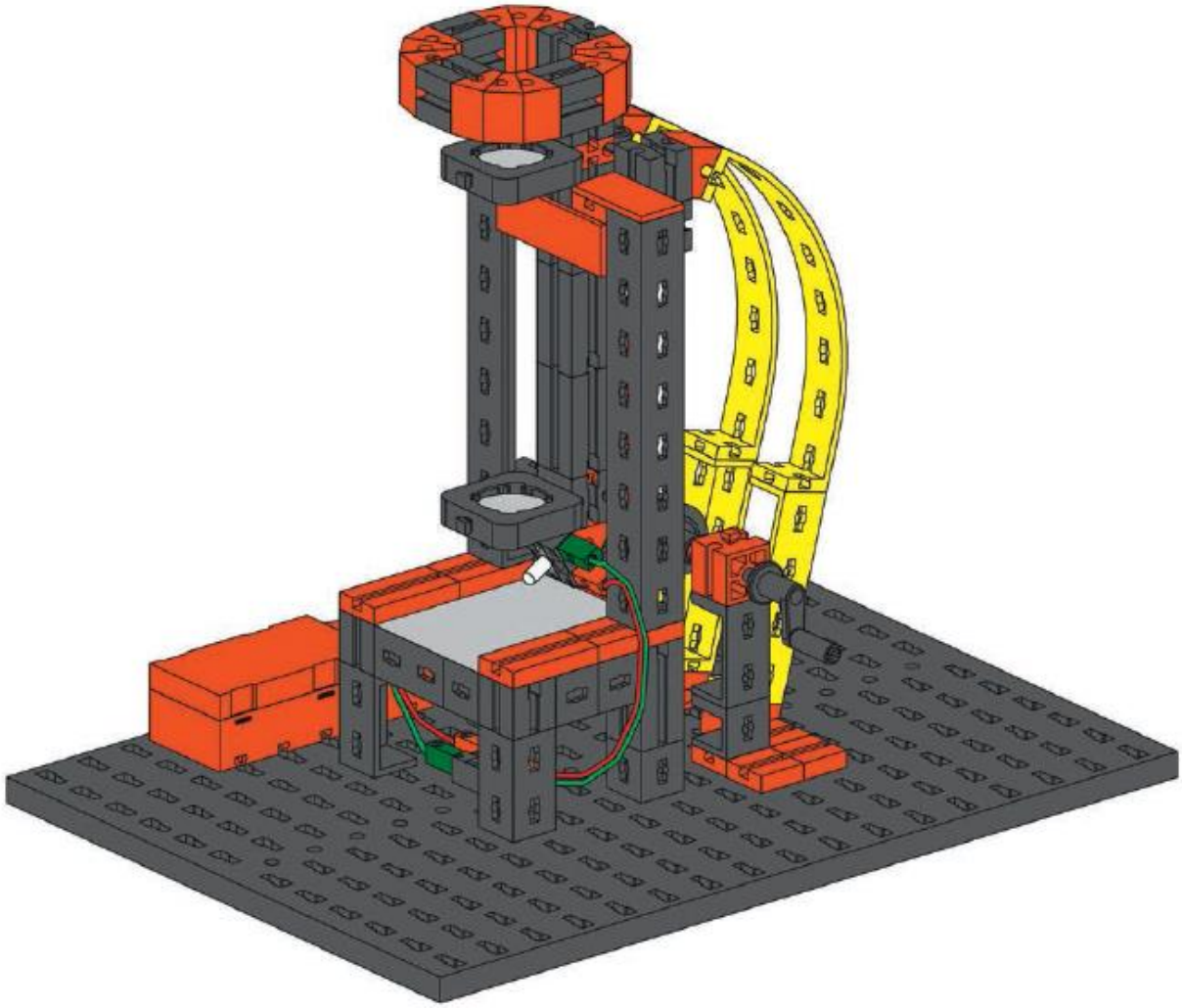

Optics

Inhalt
Contents
Contenu
Inhoud
Contenido
Conteúdo
Contenuto
Содержание
目录

Einzelteilübersicht / Spare parts list / Liste des pièces détachées / Onderdelenoverzicht / Lista da piezas / Resumo de peça individual / Singoli componenti / Перечень деталей / 零件概览 2
Montagetipps / Tips for assembly / Tuyaux pour le montage / Montagetips / Consejos para el montaje / "Dicas" para montagem / Consigli per il montaggio / Советы по сборке / 装配建议 3

Lupe / Magnifier / Loupe / Loep / Lupa / Lupa / Lente d'ingrandimento / Лупа / 放大镜 6

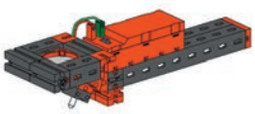

Lupe mit Licht / Magnifier with light / Loupe à éclairage / Loep met verlichting / Lupa con luz / Lupa com luz / Lente d'ingrandimento con luce / Лупа с подсветкой / 带照明的放大镜 .. 7

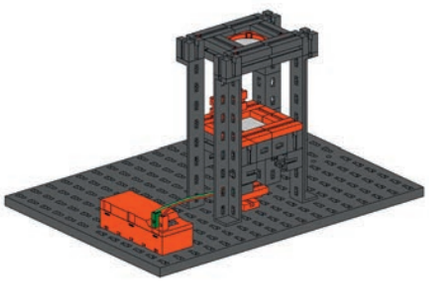

Diabetrachter / Slide viewer / Visionneuse / Diaviewer / Visor de diapositivas / Visualizador de slides / Visore per diapositive / Диаскоп / 幻灯片观像器 9

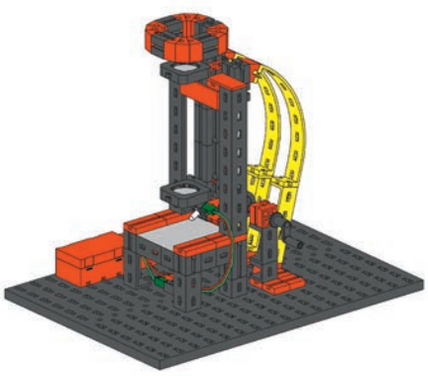

Mikroskop / Microscope / Microscope / Microscoop / Microscopio / Microscópio / Microscopio / Микроскоп / 显微镜 13

Astronomisches Fernrohr / Astronomical telescope / Télescope astronomique / Telescoop / Telescopio astronómico / Telescópio astronômico / Telescopio astronomico / Астрономический телескоп / 天文望远镜 22

Erdfernrohr / Erecting telescope / Télescope terrestre / Terrestrische telescoop / Telescopio terrestre / Telescópio terrestre / Telescopio terrestre / Подзорная труба / 折射望远镜 29

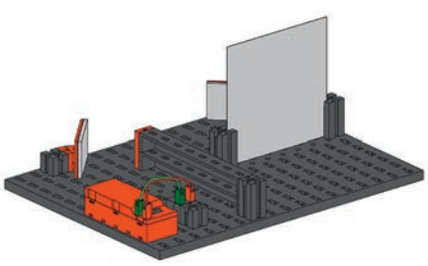

Spiegelparcours / Mirror course / Parcours à miroir / Spiegelparcours / Pista de recorrido de espejo / Percurso de espelhos / Percorso specchio / Зеркальный маршрут / 镜子障碍物跑道 35

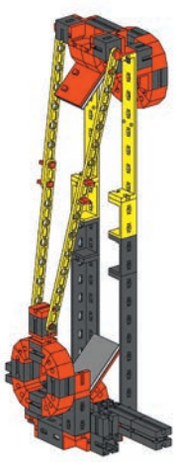

Periskop / Periscope / Périscope / Periscoop / Periscopio / Periscópio / Periscopio / Перископ / 潜望镜 37

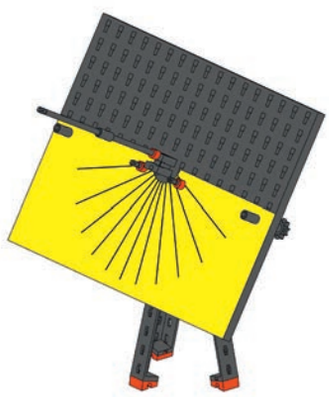

Sonnenuhr / Sun dial / Cadran solaire / Zonnewijzer / Reloj de sol / Relógio de sol / Meridiana / Солнечные часы / 日规 41

Inhalt
Contents
Contenu

Inhoud
Contenido
Conteúdo

Contenuto
Содержание
目录

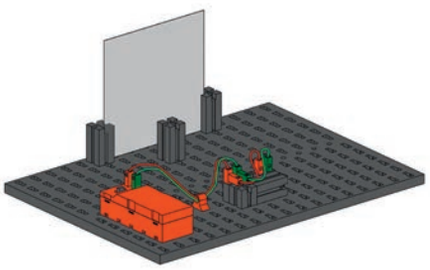

Halb- und Kernschatten / Partial and full shade / Ombre pure et pénombre / Half- en kernschaduw / Semisombra y sombra absoluta / Penumbra e umbra / Ombra e penombra / Полутени и полные тени / 半影和本影 44

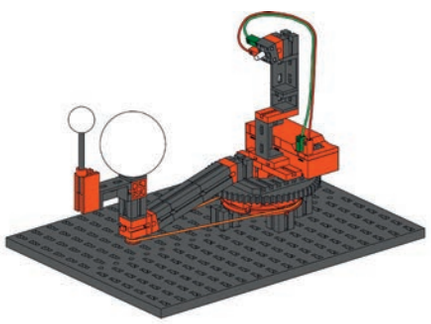

Planetenmodell / Planetary model / Modèle planétaire / Model van planeten / Modelo de planetas / Modelo planetário / Modello planetario / Модель планет / 行星模型 46

Lichtspiel / Light effects / Jeu de lumière / Lichtspel / Juego de luces / Jogo de luz / Gioco di luci / Игра света / 光表演 50

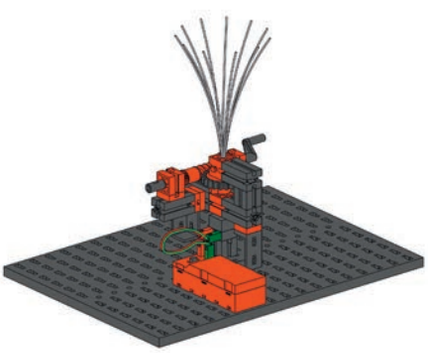

Lichtspiel mit Kurbel / Light effects with crank / Jeu de lumière à manivelle / Lichtspel met slinger / Juego de luces con manivela / Jogo de luz com manivela / Gioco di luci con manovella / Игра света с рукояткой / 用手摇柄进行光表演 52

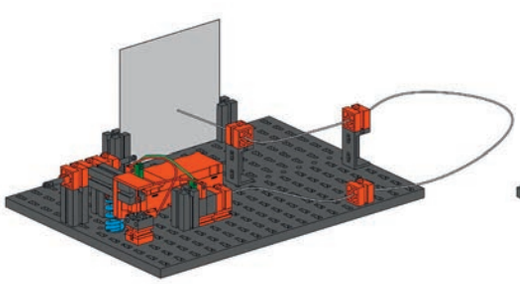

Optischer Morseapparat / Optical morse telegraph / Manipulateur de morse à fonctionnement optique / Optisch morseapparaat / Telégrafo Morse óptico / Aparelho Morse ótico / Apparecchio Morse ottico / Оптический аппарат Морзе / 光的摩尔斯电报机 55

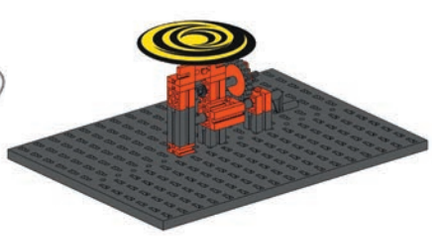

Optische Täuschung / Optical illusion / Illusion optique / Gezichtsbedrog / Ilusión óptica / Ilusão de ótica / Illusione ottica / Оптический обман / 视错觉 58

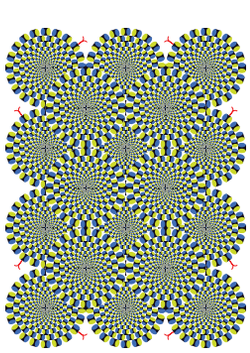

Fantastische Kreise / Fantastic circles / Cercles fantastiques / Fantastische cirkels / Círculos fantásticos / Círculo fantástico / Illusione ottica / Оптический обман/ 视错觉 61

Einzelteilübersicht
Spare parts list
Liste des pièces détachées

Onderdelenoverzicht
Lista da piezas
Resumo de peça individual

Singoli componenti
Перечень деталей
零件概览

	31 010 2 x
	31 011 28 x
	31 019 1 x
	31 021 1 x
	31 022 1 x
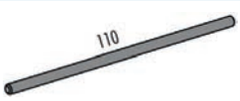	31 031 1 x
	31 058 1 x
	31 060 1 x
	31 336 4 x
	31 337 4 x
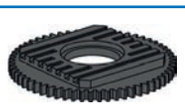	31 390 1 x
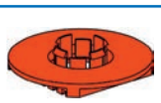	31 391 1 x
	31 597 2 x
	31 674 4 x
	31 848 2 x
	31 891 1 x
	31 892 1 x
	31 915 1 x
	31 918 1 x
	31 981 9 x
	31 982 12 x
	32 064 9 x
	32 850 6 x
	32 879 9 x
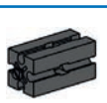	32 880 1 x
	32 881 13 x
	32 882 1 x
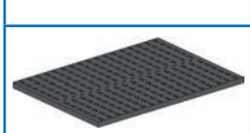	32 985 1 x
	35 031 1 x
	35 049 6 x
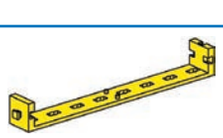	35 054 2 x
	35 060 4 x
	35 061 1 x
	35 062 1 x
	35 063 2 x
	35 064 2 x
	35 066 1 x
	35 072 1 x
	35 073 4 x
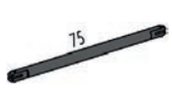	35 087 1 x
	35 088 1 x
	35 945 2 x
	35 969 1 x
	35 973 1 x
	35 977 1 x
	36 293 3 x
	36 299 4 x
	36 323 11 x
	36 334 2 x
	36 443 1 x
	36 532 1 x
	36 819 1 x
	36 920 8 x
	36 922 6 x
	36 950 5 x
	36 973 3 x
	36 977 1 x
	37 034 2 x
	37 237 11 x
	37 238 3 x
	37 468 3 x
	37 679 3 x
	37 858 1 x
	37 875 2 x
	37 925 1 x
	37 926 1 x
	38 216 4 x
	38 240 12 x

Einzelteilübersicht
Spare parts list
Liste des pièces détachées

	38 241 2 x
	38 242 1 x
	38 246 1 x
	38 248 2 x
	38 416 1 x
	38 423 6 x

Onderdelenoverzicht
Lista da piezas
Resumo de peça individual

	38 428 2 x
	130 593 2 x
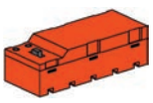	135 719 1 x
	136 775 1 x
	137 103 1 x
	145 416 1 x

Singoli componenti
Перечень деталей
零件概览

	145 860 2 x
	145 862 2 x
	145 863 1 x
	145 864 1 x
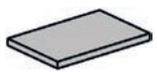	146 373 2 x
	146 374 1 x

	146 375 1 x
	146 376 1 x
	146 377 1 x
	146 378 1 x
	146 876 1 x

Montagetipps
Tips for assembly
Tuyaux pour le montage

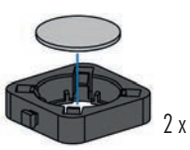

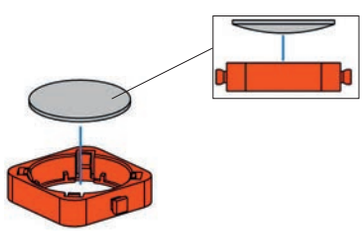

Montagetips
Consejos para el montaje
"Dicas" para montagem

Consigli per il montaggio
Советы по сборке
装配建议

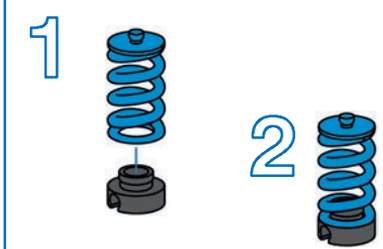

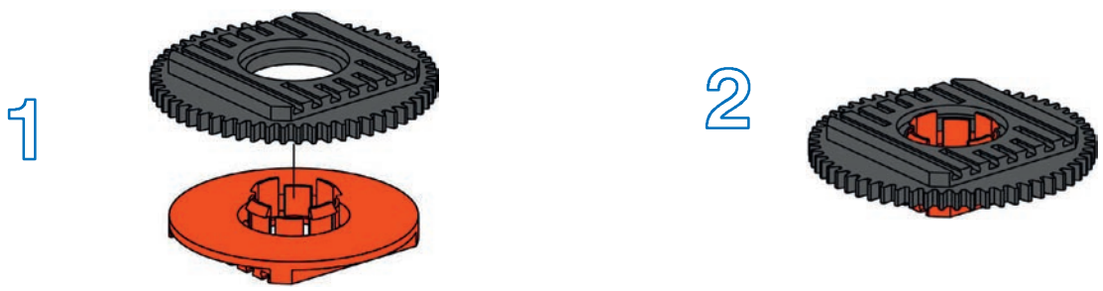

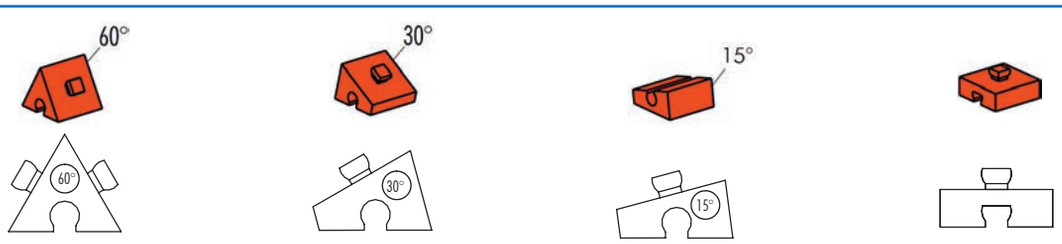

Montagetipps
Tips for assembly
Tuyaux pour le montage

Montagetips
Consejos para el montaje
"Dicas" para montagem

Consigli per il montaggio
Советы по сборке
装配建议

Kabel und Stecker
Plugs and cables
Fiches et des câbles

Stekkers en cables
Enchufes en cables
Cabos e contatos

Cavi e connettori
Провода и штекеры
电缆和插头

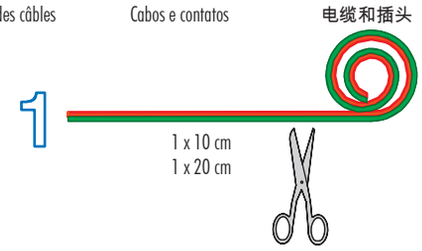

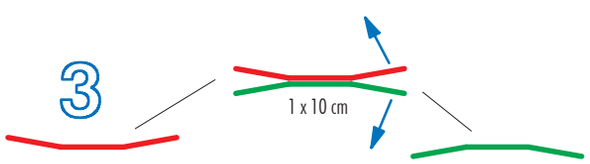

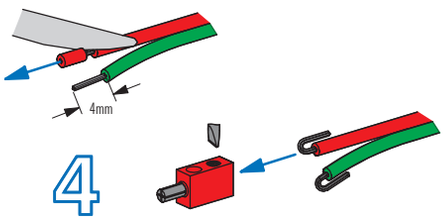

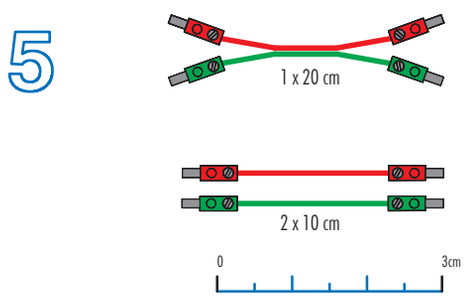

Lichtleiter
Fiber Optics
Fibres optiques

Lichtgeleiders
Conductor de luz
Fibras óticas

Fibre ottiche
Световод
光导纤维

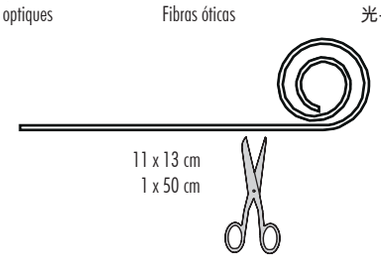

Linsenlampe
Lens tip lamp
Ampoule lentille
Lenslampje
Lampada lenticolare
Lâmpada de formato lenticular
Lampada lenticolare
Лампа накаливания с линзой
透镜灯

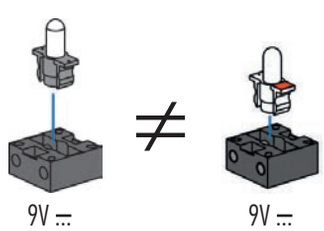

Rainbow LED
Rainbow LED
DEL Rainbow
Rainbow-LED
LED de arco iris
Rainbow LED
Rainbow LED
Светодиод „радуга“
LED 彩灯

Spielgelplatte
Mirror plate
Plaque miroitante

Spiegelplaat
Placa de espejo
Placa espelhada

Piastra a specchio
Зеркальная пластина
镜子

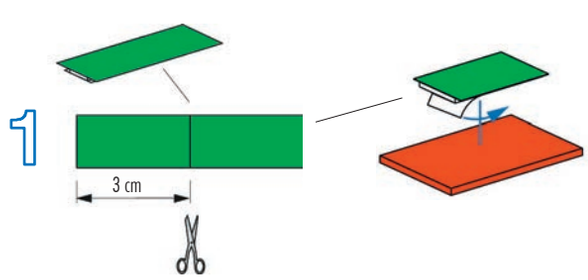

Schutzfolie
Protective foil
Pellicule de protection
Beschermfolie
Película de protección

Filme de proteção
Pellicola protettiva
Защитная плёнка
保护膜

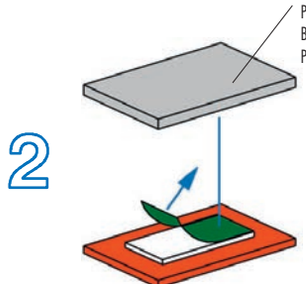

Schutzfolie abziehen
Remove protective foil
Retirer la pellicule de protection
De beschermfolie verwijderen
Desprender la película de protección

Remover o filme de proteção
Togliere la pellicola protettiva
Снять защитную плёнку
撕掉保护膜

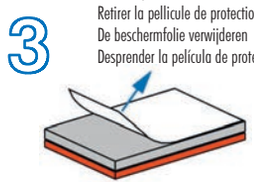

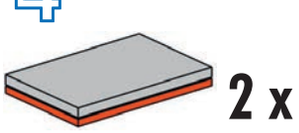

Sicherheitshinweise
Safety Information
Consignes de sécurité
Veiligheidsrichtlijnen
Indicaciones de seguridad
Observações sobre segurança
Informazioni per la sicurezza
Указания по технике безопасности
安全指南

- Achtung! Verletzungsgefahr an Bauteilen mit funktionsbedingten scharfen Kanten und Spitzen!
- Caution! Be careful not to hurt yourself on components with sharp or pointed edges!
- Attention! Risque de blessure sur les élements comportant des arêtes et o pointes vives indispensables au bon fonctionnement!
- Let op! U kunt zich bezeren aan bouwstenen met sherpe randen of punten!
- Attenzione! Esiste il pericolo di lesione con i pezzi di costruzione che hanno bordi e punte spigolosi necessari per la funzionalita del pezzo!
- Alle Einzelteile, insbesondere bewegliche Teile sind falls notwendig zu warten und zu reinigen.
- All components, especially moving parts, should be maintained and cleaned as necessary.
- Toutes les pièces détachées et en particulier les pièces mobiles, sont, si nécessaire, à entretenir et à nettoyer.
- Alle onderdelen, vooral de bewegende delen, kunnen, indien noodzakelijk, onderhouden en gereinigd worden.
- Es necesario limpiar y mantener en buen estado todas las diferentes piezas - especialmente las piezas móviles.
- Atenção! Perigo de ferimentos em peças componentes com cantos vivos e pontas obrigatórios para o funcionamento !
- Attenzione! Pericolo di lesioni dovute a componenti con spigoli vivi e punte per motivi funzionali!
- Будьте осторожны! Об острые края деталей и и наконечники можно порезаться!
- 注意！
  因功能需要而带有锋利的棱边和尖角的部件可能会带来受伤危险！
- Caso necessário, todas as peças individuais, especialmente peças móveis, tem que ser submetidas à manutenção e ser limpadas.
- Se necessario, tutti i singoli componenti, soprattutto le parti mobili, si devono eventualmente sottoporre a manutenzione e pulizia.
- Все детали, особенно подвижные, требуют ухода и чистки.
- 必要时应保养和清洁所有零件，尤指运动部件。

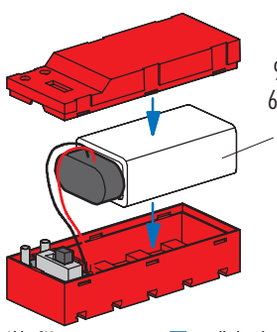

9V E-Block
6F22 / 6R61
⎓

Batterie ist nicht Inhalt der Packung
Battery not included
Batterie non comprise
De batterij wordt niet meegeleverd
La bateria no está incluida en el suministro
A bateria não é o conteúdo da embalagem
La batteria non è inclusa nella confezione
Батарея в комплект не входит
包装中不含电池

1 Batterie 9Volt-Block Alkaline oder 1 NiMH-Akku 9V

- Nicht wiederaufladbare Batterien dürfen nicht geladen werden
- Aufladbare Batterien dürfen nur von Erwachsenen geladen werden
- Aufladbare Batterien sind aus dem Batteriehalter herauszunehmen, bevor sie geladen werden.
- Batterien müssen mit der richtigen Polarität eingelegt werden.
- Leere Batterien müssen aus dem Spielzeug herausgenommen werden
- Die Anschlussklemmen dürfen nicht kurzgeschlossen werden.
- Verbrauchte Batterien dem Sondermüll zuführen.
- Drähte nicht in Steckdose einführen!
- Ladegerät regelmäßig auf Schäden überprüfen.Bei einen Schaden darf das Ladegerät bis zur vollständigen Reparatur nicht mehr verwendet werden.
- Alle elektrischen Bauteile (Motoren, Lampen) dürfen ausschließlich an Stromversorgungen von fischertechnik angeschlossen werden.

9V rechargeable battery or 9 V alkaline dry cell

- Do not attempt to charge NON-rechargeable batteries.
- Rechargeable batteries are only to be charged by adults.
- Take rechargeable batteries out of the battery tray before charging them.
- Insert batteries with the correct polarity.
- Remove dead batteries from the toy.
- Do not short circuit the connecting terminals!
- Discard spent dry cells at special waste disposal centre.
- Do not insert the wires into an outlet!
- Regularly inspect battery charger for damage.If the battery charger has been damaged, it should not be used further until fully repaired.
- No electrical components (motors, lamps) are to be connected to any other power supply than that provided by fischertechnik.

pile 9V où accu 9V

- Il est interdit de recharger des piles qui ne sont pas des accumulateurs
- Le chargement des accumulateurs doit toujours se faire par des adultes
- Retirer les accumulateurs du support de pile avant de les recharger.
- Veiller à la polarité correcte lors de la mise en place des piles.
- Retirer impérativement les piles ou accumulateurs vides du jouet.
- Il est interdit de court-circuiter les bornes de raccordement.
- Jeter les piles usagées dans un conteneur spécial réservé à cet effet.
- Ne pas introduire les fils dans une prise !
- Contrôlez régulièrement le chargeur en vue d'éventuelles détériorations
- En cas de détérioration, il est interdit d'utiliser le chargeur jusqu'à ce qu'il ait été intégralement réparé
- Tous les composants électriques (moteurs, lampes) ne doivent être branchés aux alimentations électriques uniquement que par la société Fischertechnik.

alkaline batterije of oplaadbare batterije (9Volt)

- Niet-oplaadbare batterijen mogen niet worden opgeladen.
- Oplaadbare batterijen mogen uitsluitend door volwassenen worden opgeladen.
- Oplaadbare batterijen moeten uit de batterijhouder worden verwijderd, voordat deze worden opgeladen.
- De batterijen moeten met de juiste polariteit worden geplaatst.
- Lege batterijen moeten uit het speelgoed worden verwijderd.
- De aansluitklemmen mogen niet worden kortgesloten.
- Afleveren gebruikte batterijen bij het klein chemisch afval (KCA).
- Geen draden in de contactdoos steken!
- Laadtoestel regelmatig controleren op schade.Bij schade mag het laadtoestel niet meer gebruikt worden tot het volledig hersteld is.
- Alle elektrische componenten (motoren, lampen) mogen uitsluitend op stroomvoorzieningen van fischertechnik worden aangesloten.

pila alcalina bloque de 9 Voltios o acumulador NiMH- de 9 Voltios

- Las pilas no recargables no pueden ser cargadas
- Las pilas recargables sólo pueden ser cargadas por un adulto
- Las pilas recargables deben ser extraídas del compartimiento de pilas antes de que sean cargadas.
- Las pilas deben ser colocadas con la polaridad correcta.
- Las pilas descargadas deben ser extraídas del juguete
- Los bornes de conexión no pueden ser puestos en cortocircuito.
- Retirar las baterías viejas, desechándolas en un depósito de basuras especiales.
- No introducir hilos en la toma de corriente!
- Comprobar con regularidad si el cargador presenta daños.En caso de presentar daños, el cargador no debe volver a ser utilizado hasta que esté completamente reparado.
- Todos los componentes eléctricos (motores, luces) deben conectarse a la alimentación de corriente de la técnica Fischer exclusivamente.

Bateria alcalina de bloco de 9 V ou acumulador NiMH- de 9 V

- Pilhas não recarregáveis não devem ser novamente carregadas.
- Pilhas recarregáveis somente devem ser recarregadas por adultos.
- Pilhas recarregáveis devem ser retiradas do compartimento de pilhas antes de serem carregadas.
- As pilhas devem ser colocadas com a polaridade correta.
- As pilhas descarregadas devem ser retiradas do brinquedo.
- Os terminais de conexão não devem ser curto-circuitados.
- Eliminar as baterias esgotadas como desperdício perigoso
- Nunca introduzir fios na tomada!
- Verificar regularmente se o carregador apresenta danos.Em caso de dano, o carregador não deverá ser utilizado enquanto não estiver plenamente consertado.
- Todas as peças componentes elétricas (motores, lâmpadas) só podem ser exclusivamente conectadas em abastecimentos de corrente da Fischertechnik.

1 batteria alcalina da 9 V o 1 batteria NiMH- ricaricabile da 9V

- Le batterie non ricaricabili non devono essere ricaricate
- Le batterie ricaricabili devono essere ricaricate da persone adulte
- Le batterie ricaricabili si devono estrarre dal supporto prima di ricaricarle.
- Le batterie si devono inserire rispettando la polarità.
- Togliere le batterie dal giocattolo quando sono scariche
- I morsetti di allacciamento non devono essere cortocircuitati.
- Smaltire le batterie usate negli appositi contenitori per la raccolta differenziata.
- Non inserire i fili nella presa elettrica.
- Controllare periodicamente se il caricabatterie presenta dei danni.In caso di danni, il caricabatterie non deve più essere utilizzato fino alla riparazione.
- Tutti i componenti elettrici (motori, lampadine) devono essere collegati esclusivamente ad alimentatori fischertechnik.

1 алкалиновая батарейка на 9 В или 1 никель-кадмиевый аккумулятор, 9 В

- Не пытайтесь заряжать неперезаряжаемые батарейки.
- Зарядку перезаряжаемых аккумуляторов разрешается выполнять только взрослым.
- Перед зарядкой перезаряжаемых аккумуляторов извлеките их из аккумуляторного отсека.
- При установке аккумуляторов на место соблюдайте полярность.
- Разряженные батарейки необходимо извлечь из игрушки.
- Не замыкайте накоротко соединительные клеммы.
- Использованные батареи утилизовать как спецотходы.
- Не вставляйте в розетку провода!
- Регулярно проверяйте зарядное устройство на отсутствие повреждений.При налиРии повреждений использовать зарядное устройство до выполнения его полного ремонта не разрешается.
- Все электрические детали (электромоторы, лампочки.) можно подключать только к источникам электропитания от fischertechnik.

1 个 9V 的碱性方电池或 1 个 9V 的 NiMH- 蓄电池

- 不得给非充电电池充电
- 只允许由成年人给充电电池充电
- 在充电前必须将充电电池从电池夹中取出。
- 必须按照正负极正确放入电池。
- 必须从玩具中取出没有电的电池
- 接线柱不允许被短路。
- 用完了的电池应作为特种垃圾处理。
- 禁止将金属丝插入插座！
- 经常检查充电器是否有损坏情况。如果充电器有损，直到完全修好为止不 可以再使用。
- 只允许将所有电气部件 (传感器，电机，灯泡) 与慧鱼技术产品的电源装置相连接

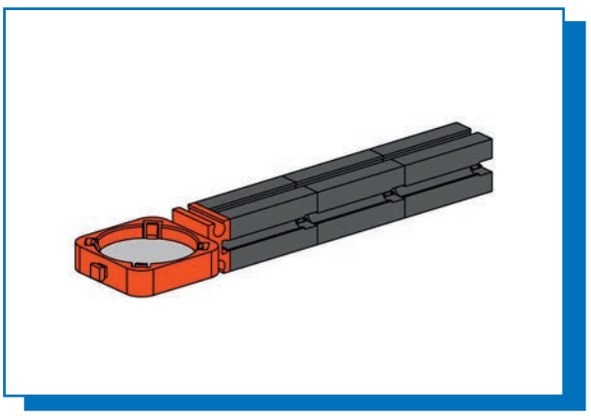

Lupe | **Loep** | **Lente d'ingrandimento**
Magnifier | **Lupa** | Лупа
Loupe | **Lupa** | 放大镜

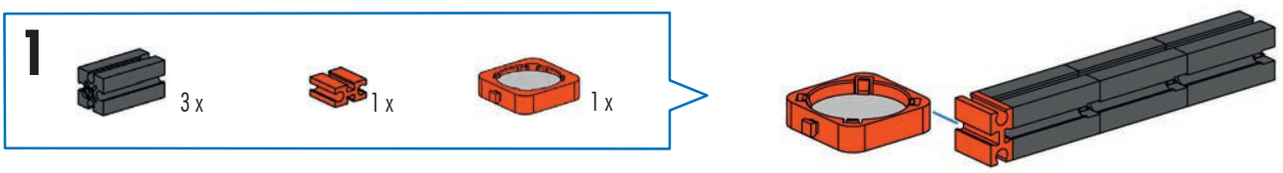

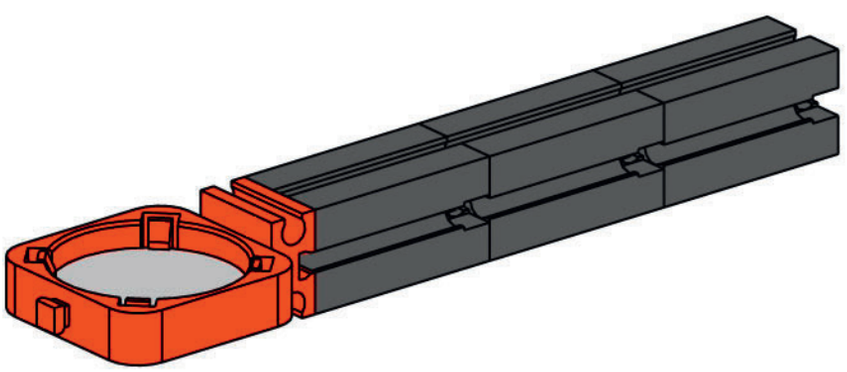

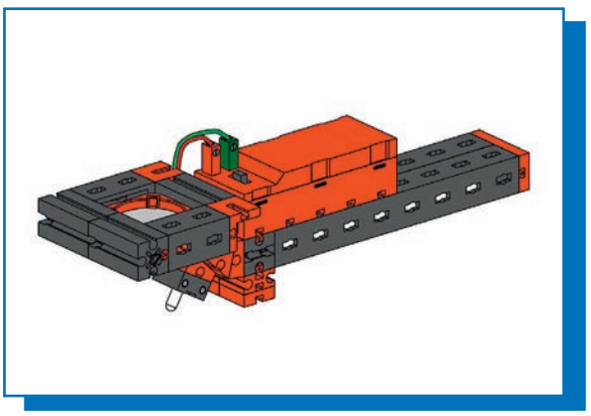

Lupe mit Licht
Magnifier with light
Loupe à éclairage
Loep met verlichting
Lupa con luz
Lupa com luz
Lente d'ingrandimento con luce
Лупа с подсветкой
带照明的放大镜

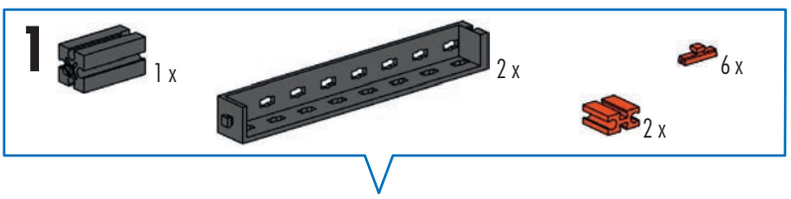

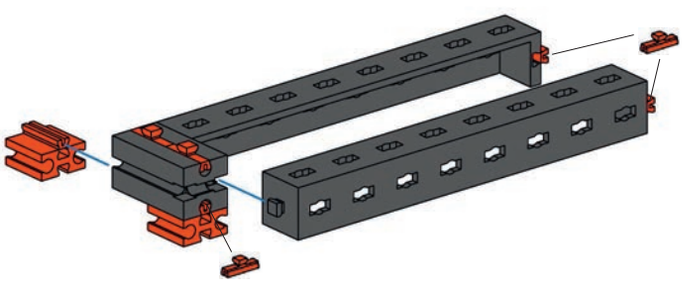

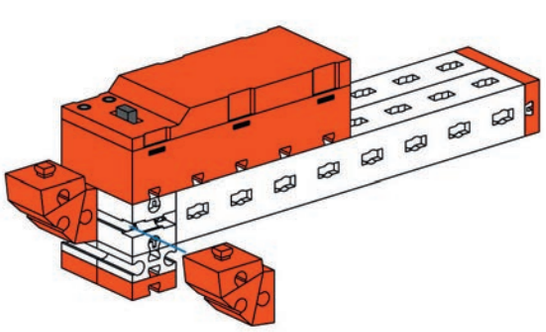

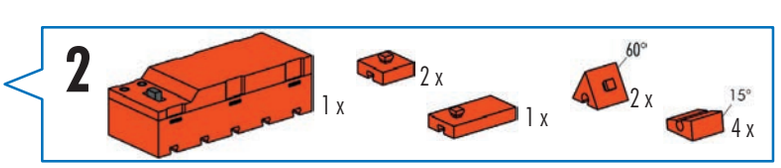

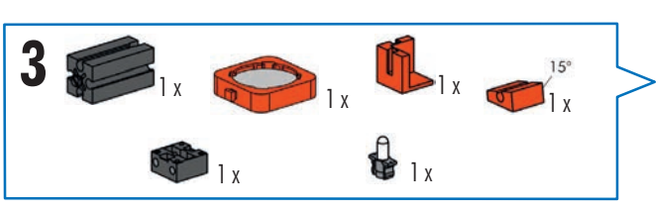

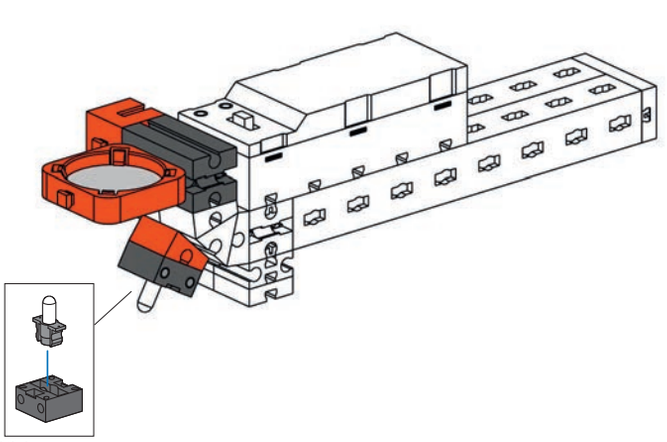

821

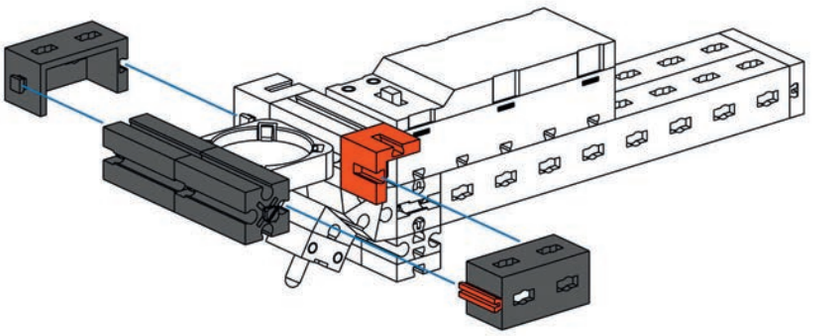

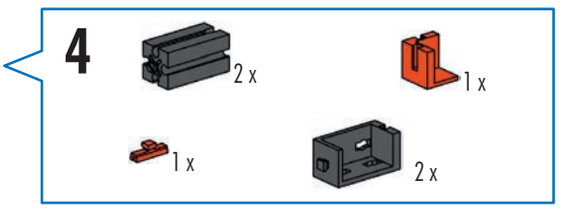

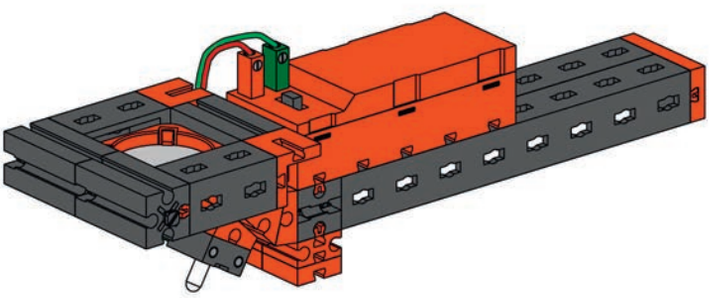

Schaltplan
Circuit diagram
Plan électrique

Schakelschema
Diagrama de circuitos
Plano elétrico de ligação

Schema elettrico
Схема подключения
电路图

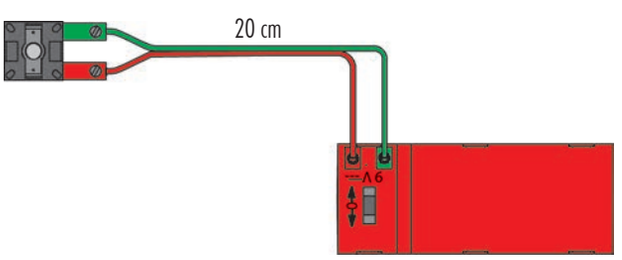

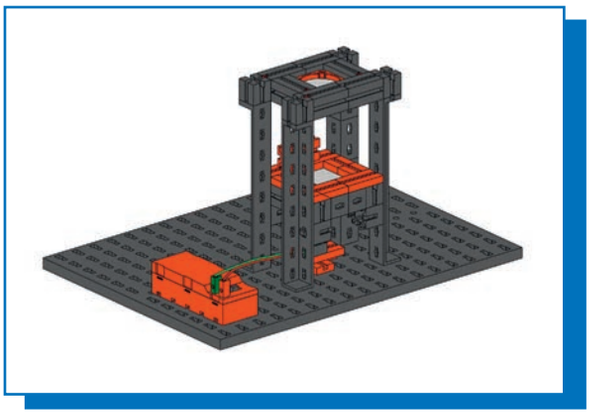

Diabetrachter
Slide viewer
Visionneuse
Diaviewer
Visor de diapositivas
Visualizador de slides
Visore per diapositive
Диаскоп
幻灯片观像器

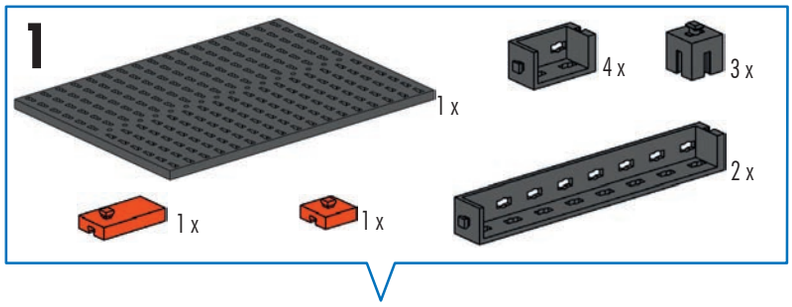

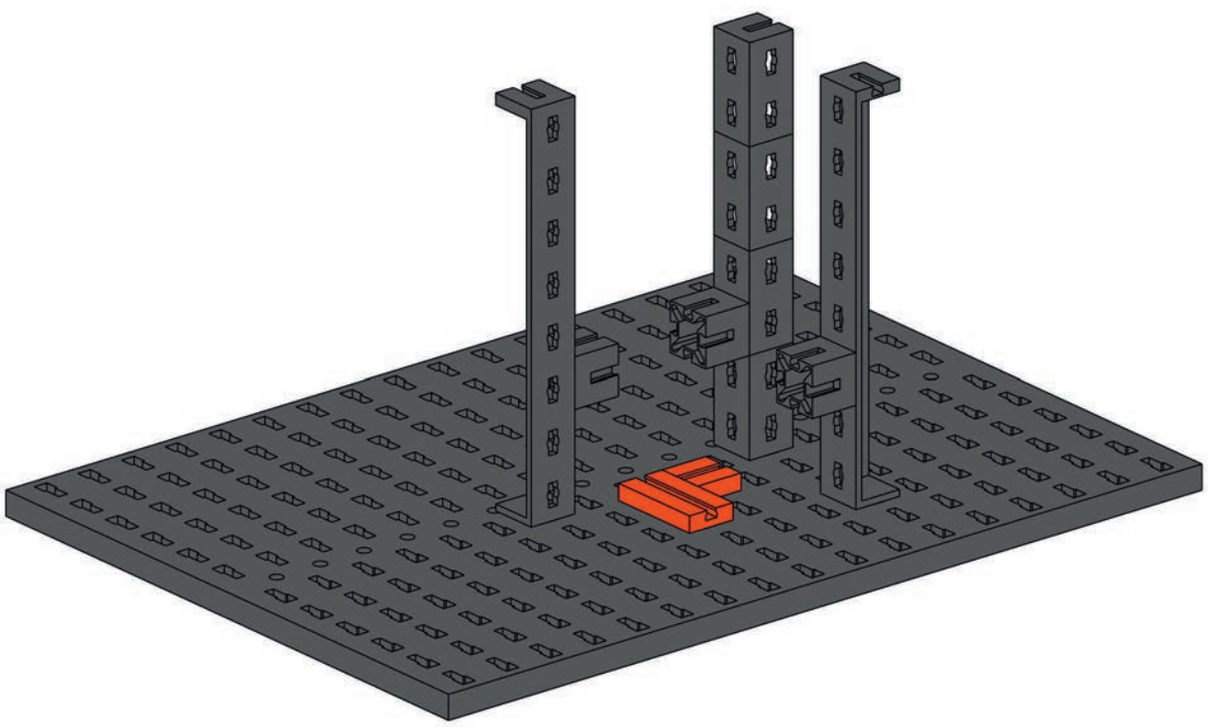

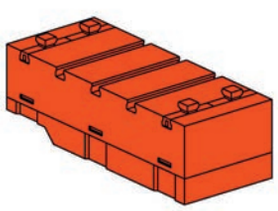

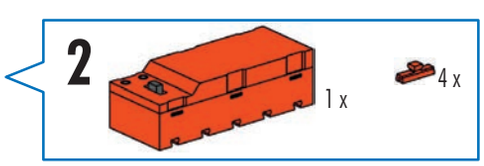

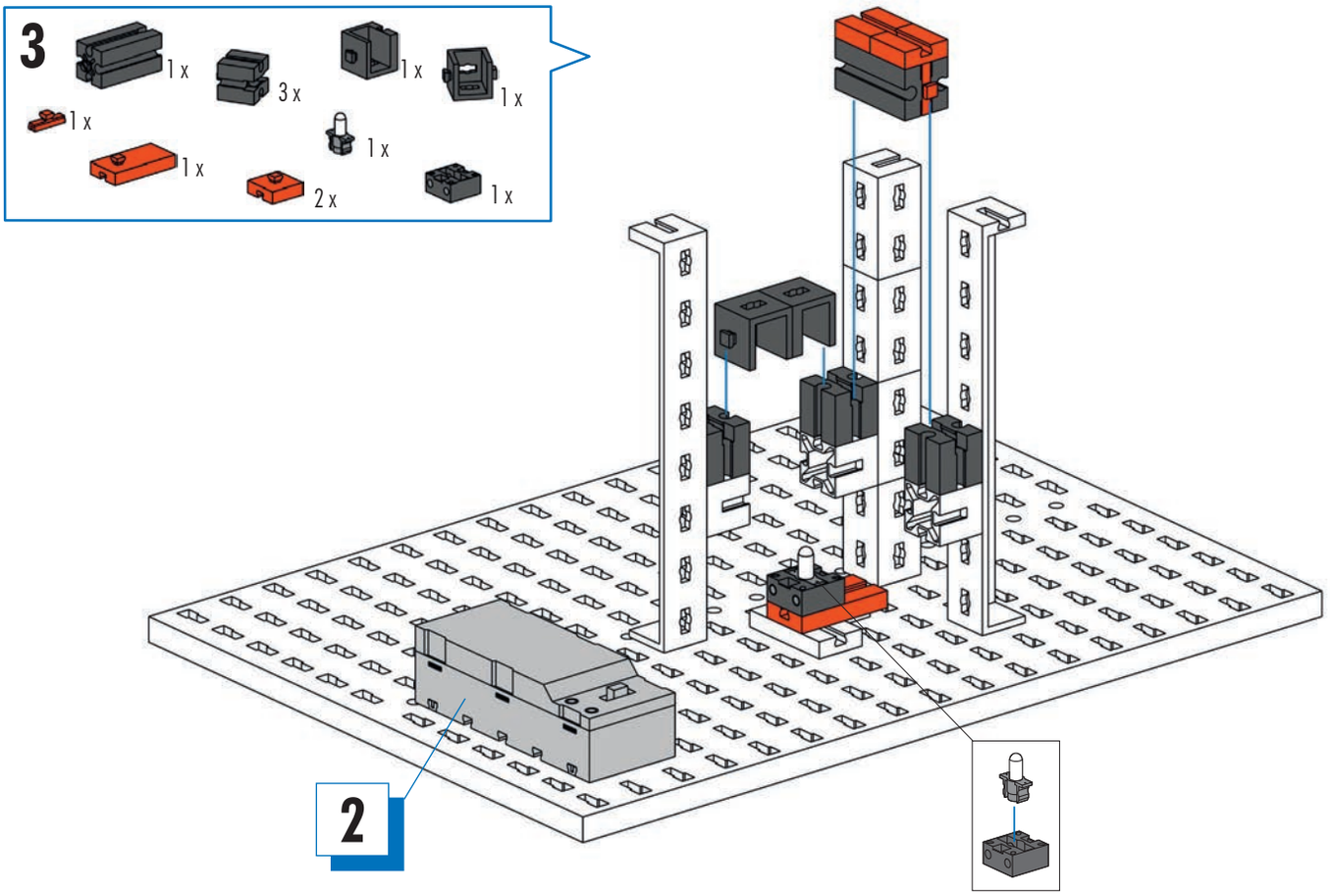
3
1 x
3 x
1 x
1 x
1 x
1 x
2 x
1 x
2

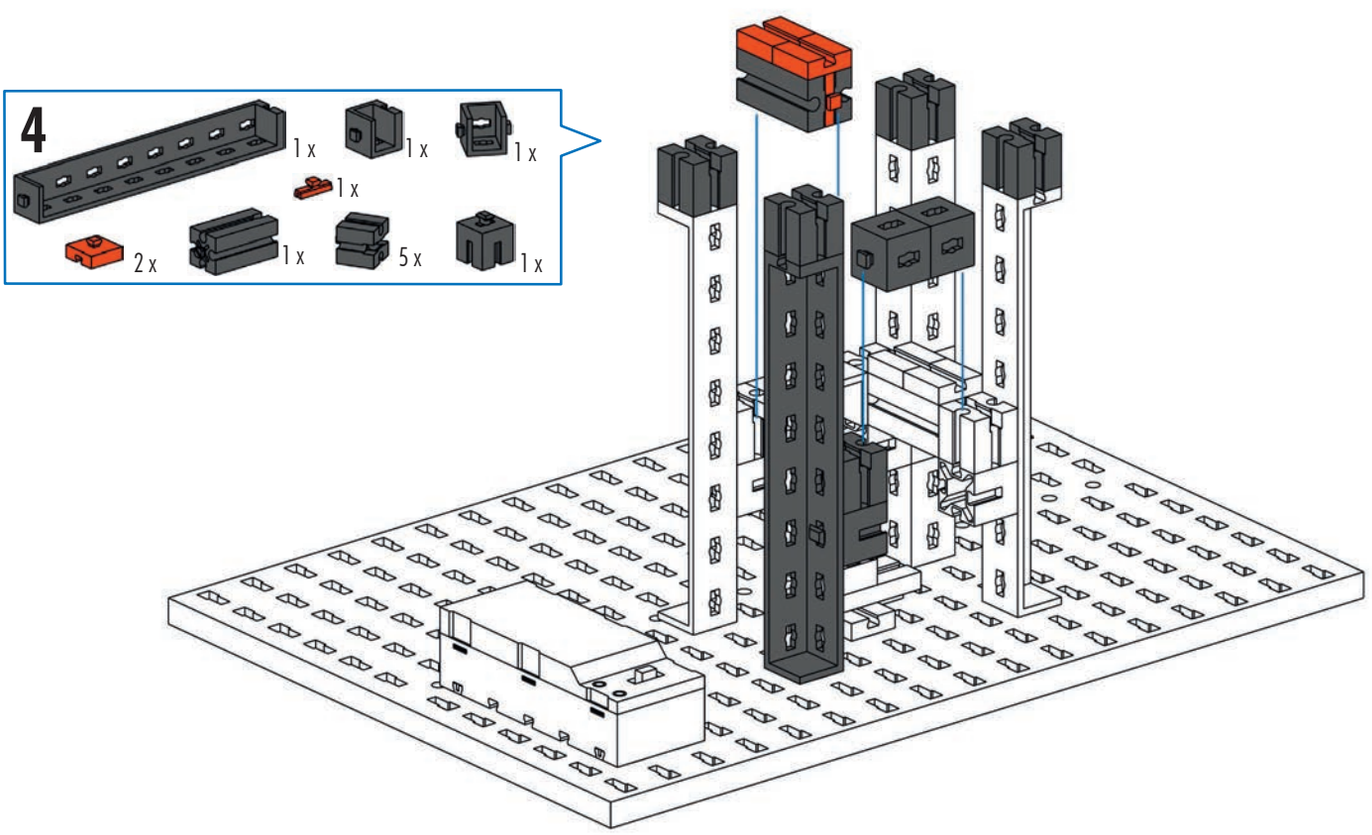
4
1 x
1 x
1 x
1 x
2 x
1 x
5 x
1 x

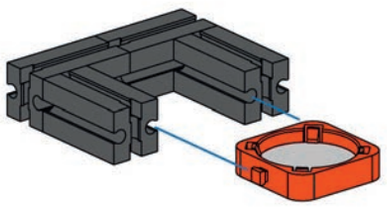

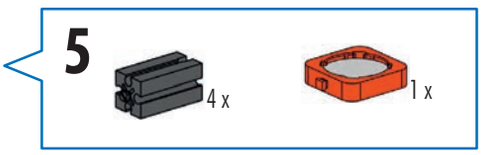
5
4 x
1 x

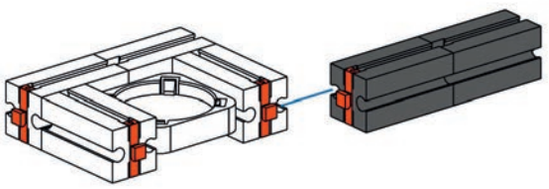

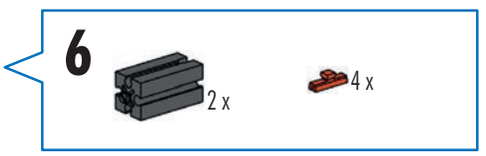
6
2 x
4 x

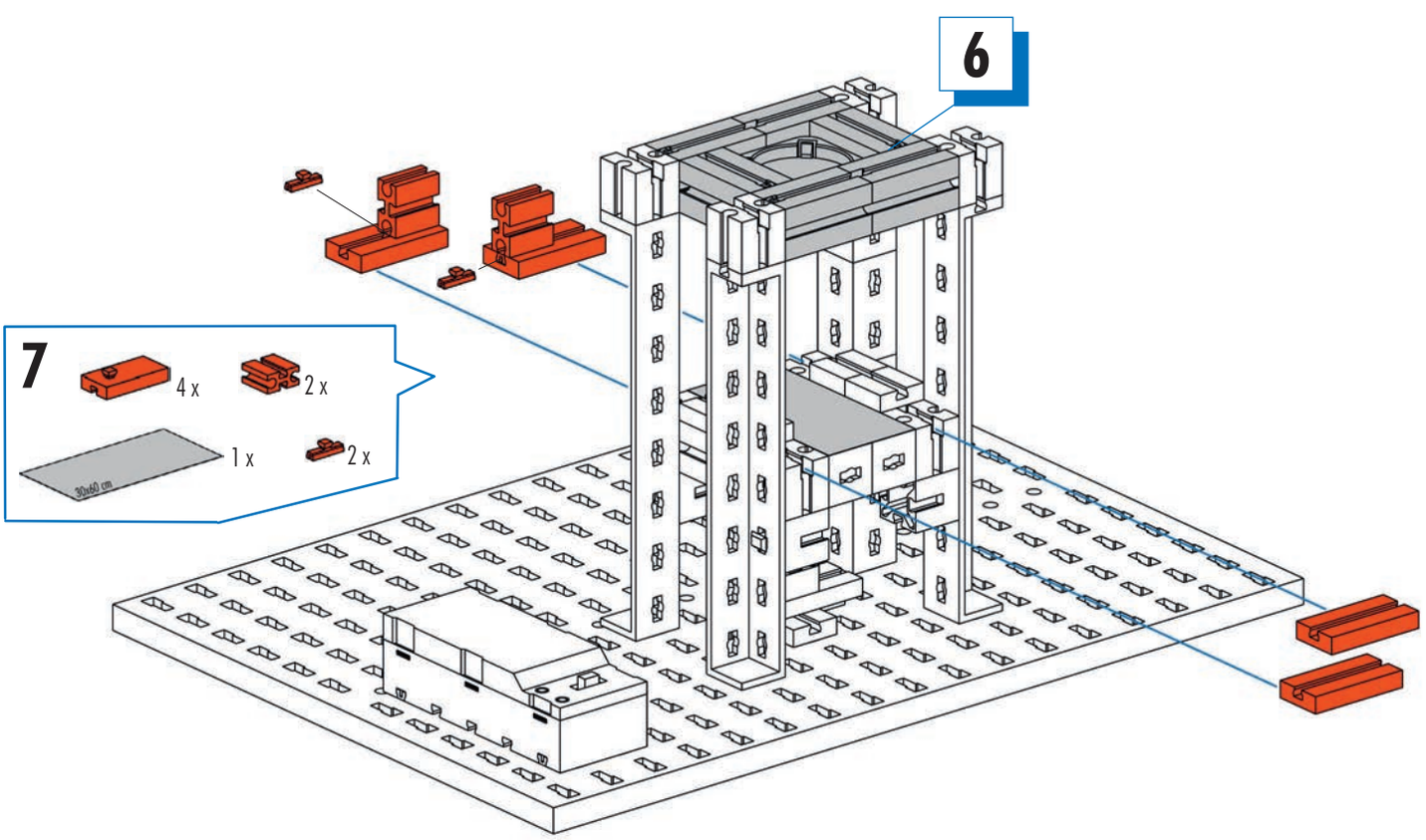
6
7
4 x
2 x
1 x
2 x
30x60 cm

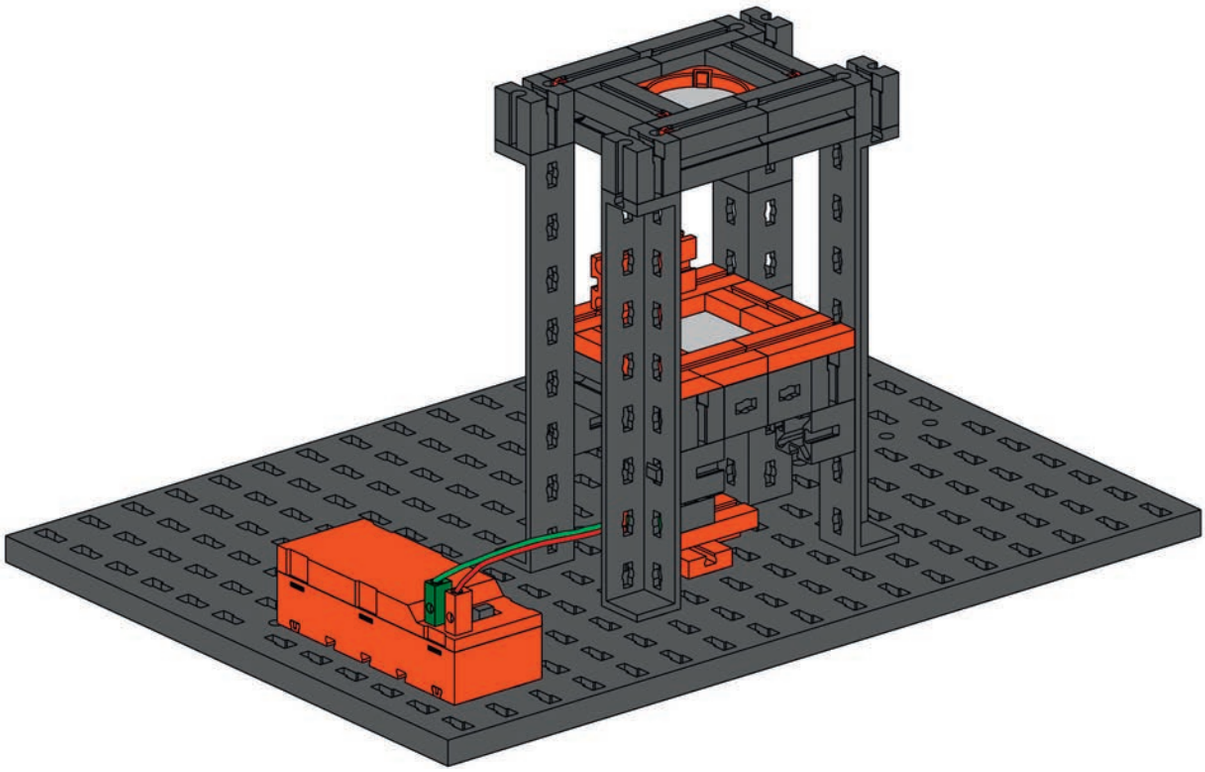

Schaltplan
Circuit diagram
Plan électrique

Schakelschema
Diagrama de circuitos
Plano elétrico de ligação

Schema elettrico
Схема подключения
电路图

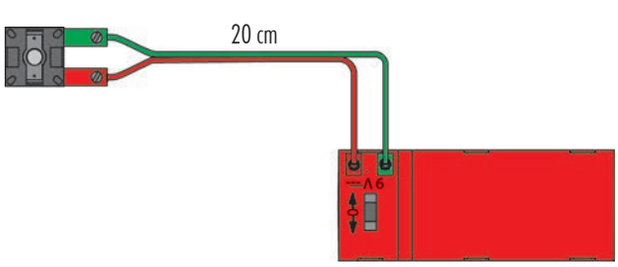

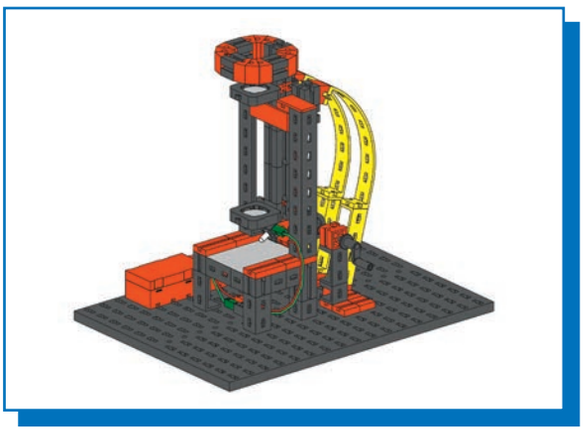

Mikroskop
Microscope
Microscope

Microscoop
Microscopio
Microscópio

Microscopio
Микроскоп
显微镜

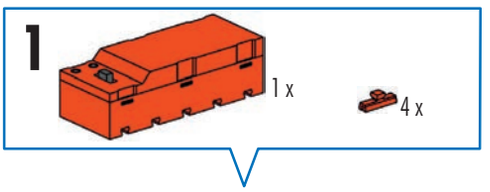

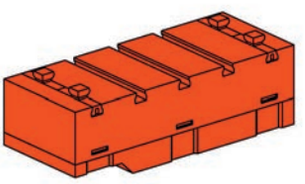

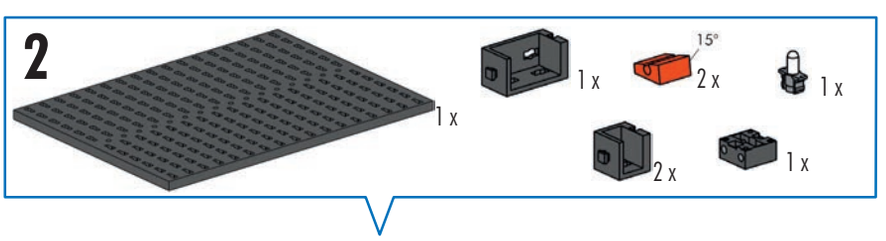

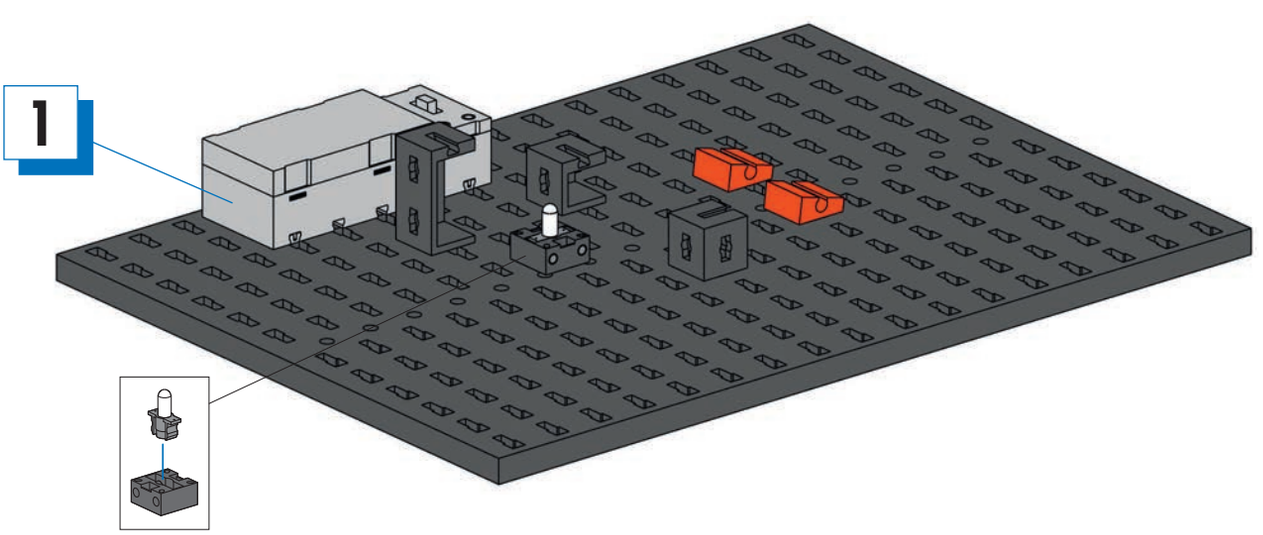

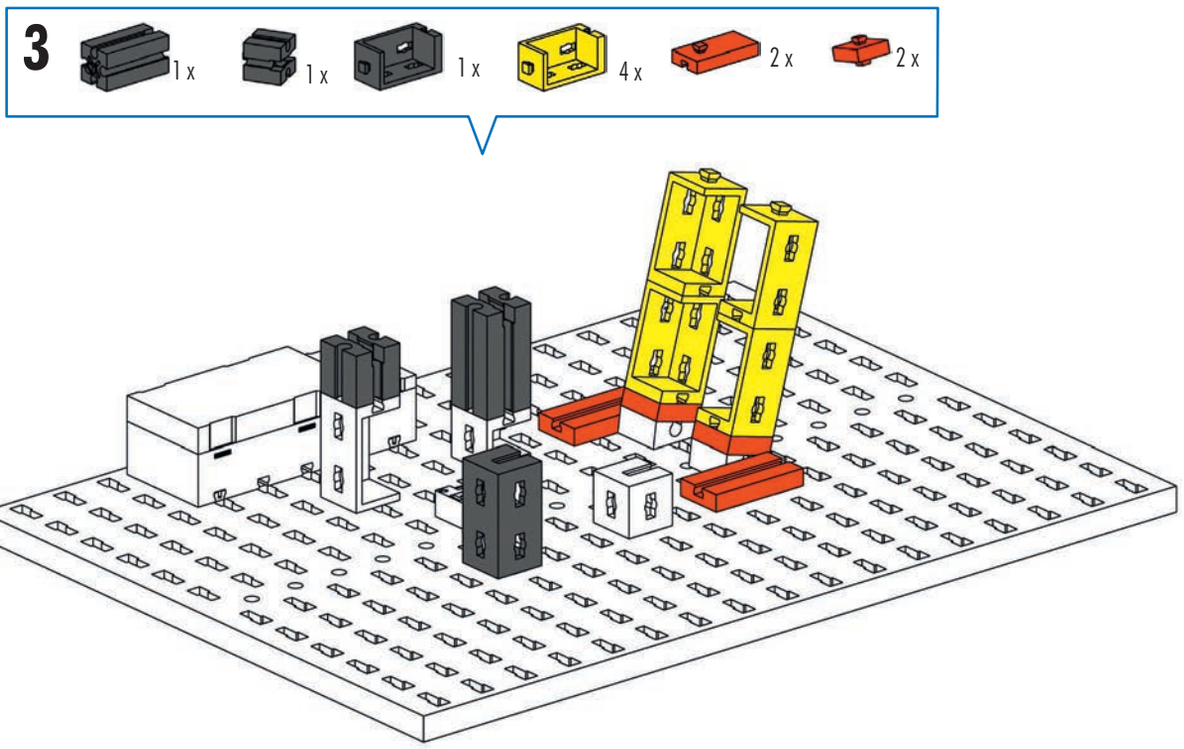
3
1 x
1 x
1 x
4 x
2 x
2 x

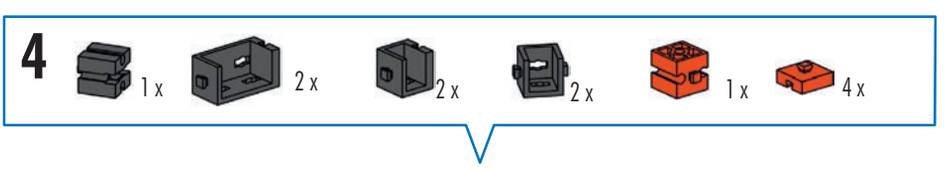
4
1 x
2 x
2 x
2 x
1 x
4 x

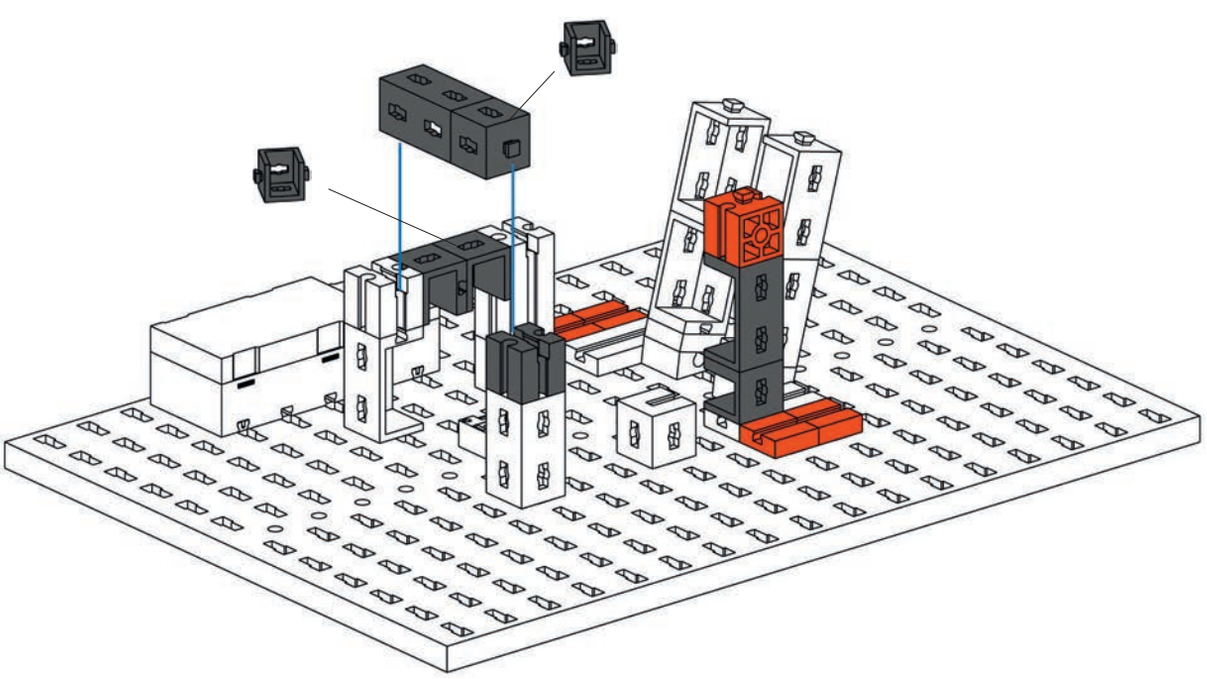

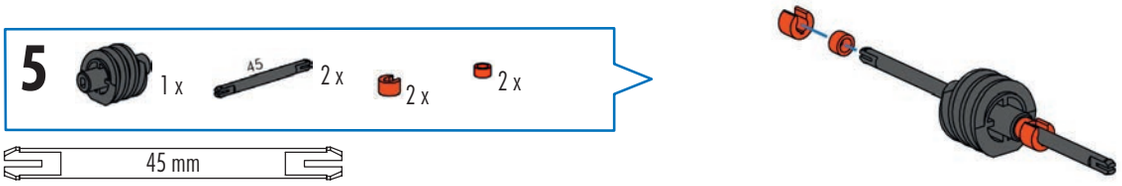
5
1 x
45
2 x
2 x
2 x
45 mm

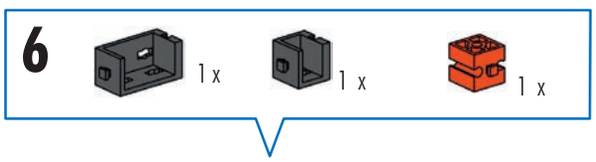
6
1 x
1 x
1 x

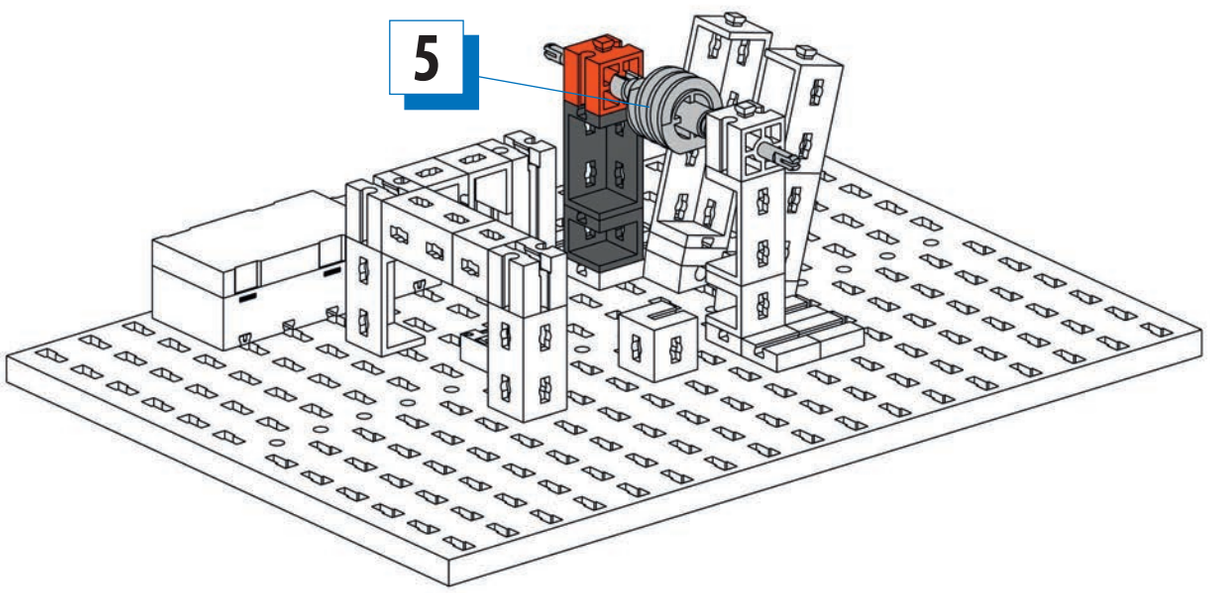
5

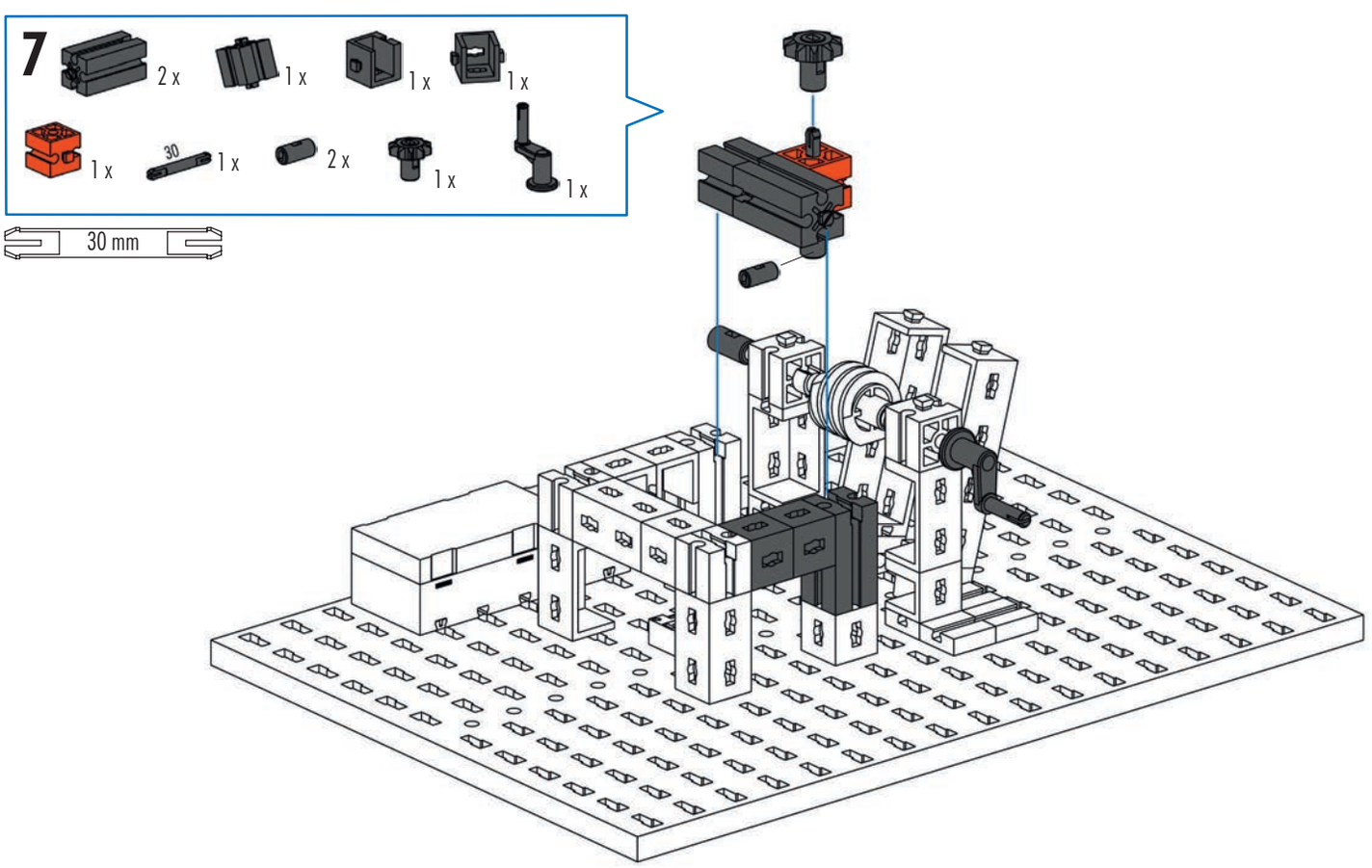
7
2 x
1 x
1 x
1 x
1 x
30
1 x
2 x
1 x
1 x
30 mm

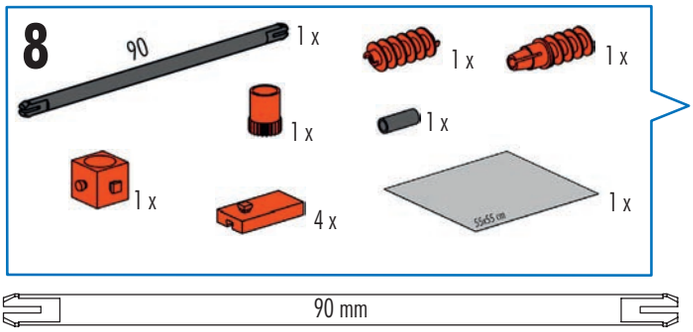

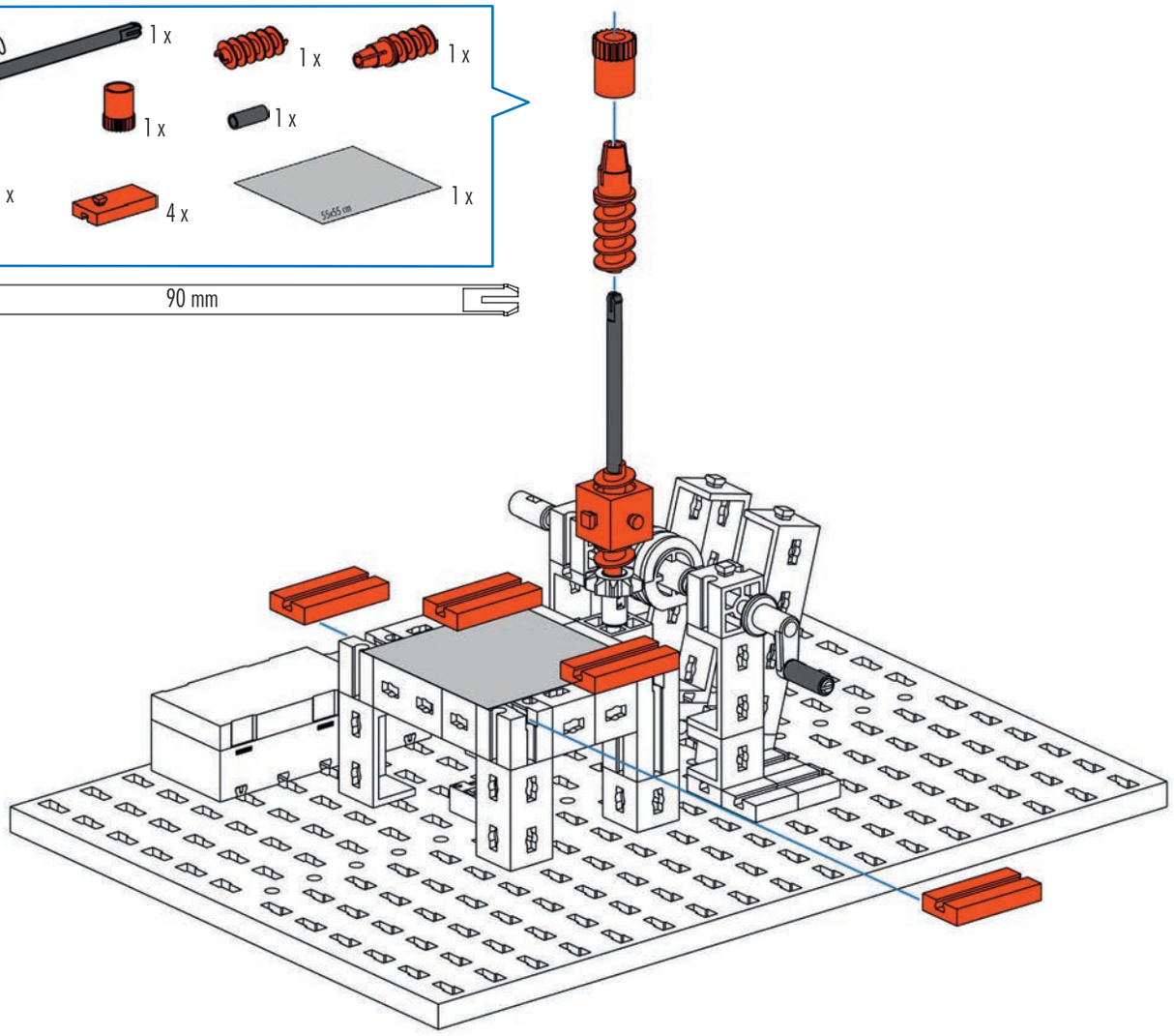

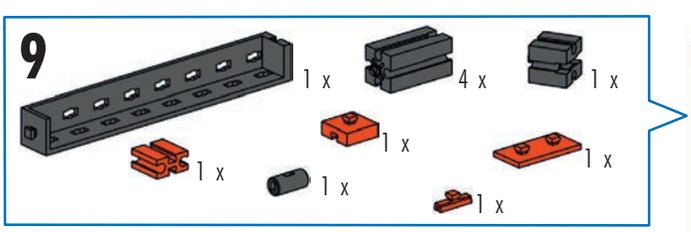

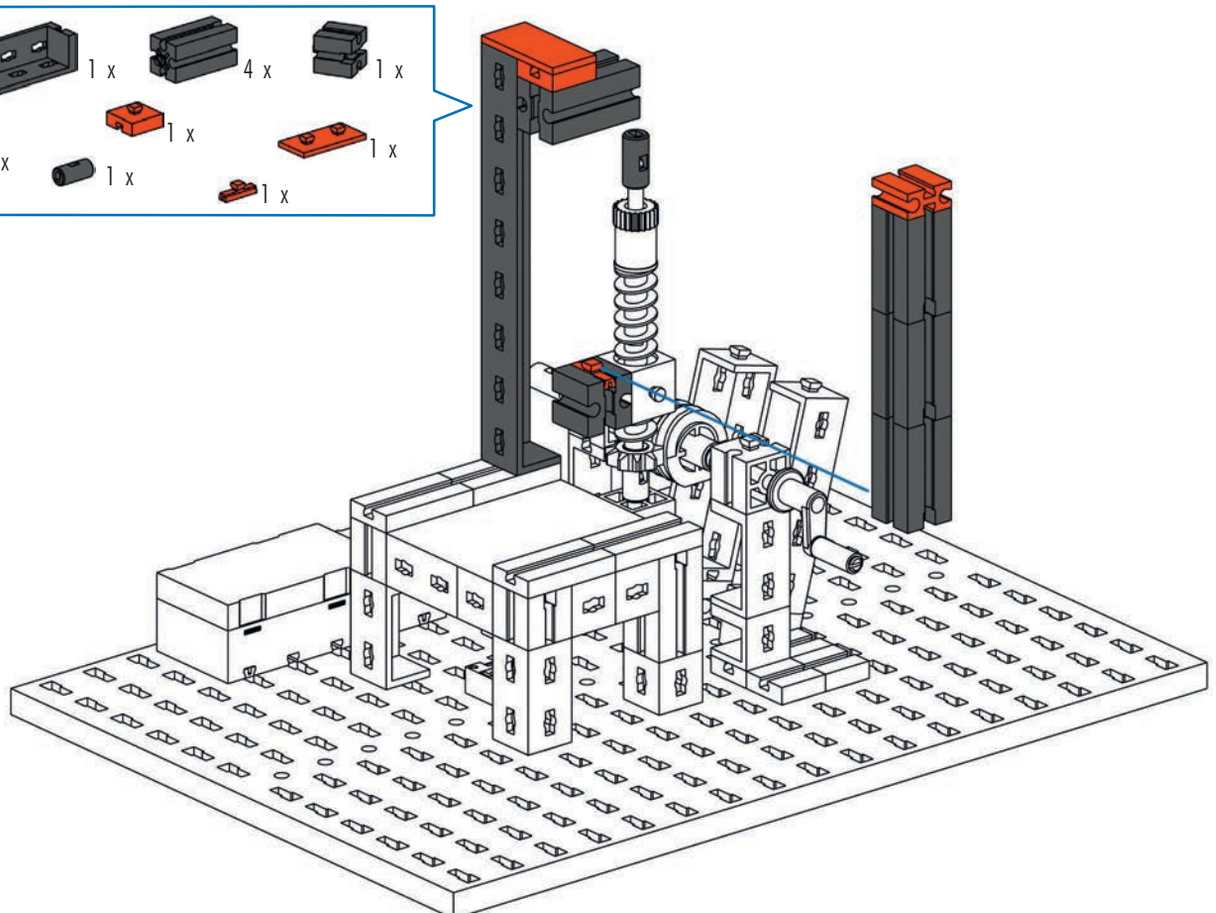

830

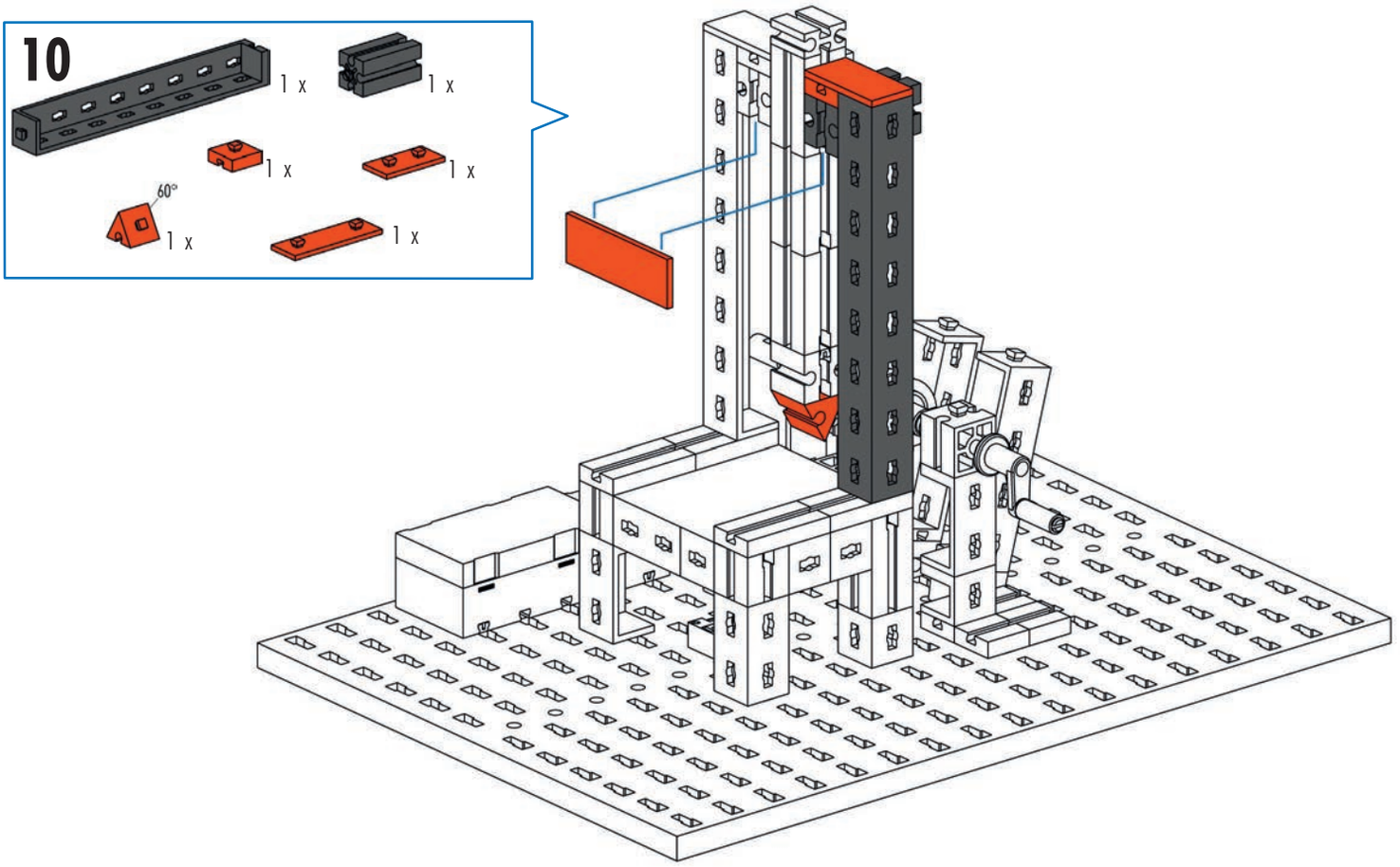
10
1 x
1 x
1 x
1 x
60°
1 x
1 x

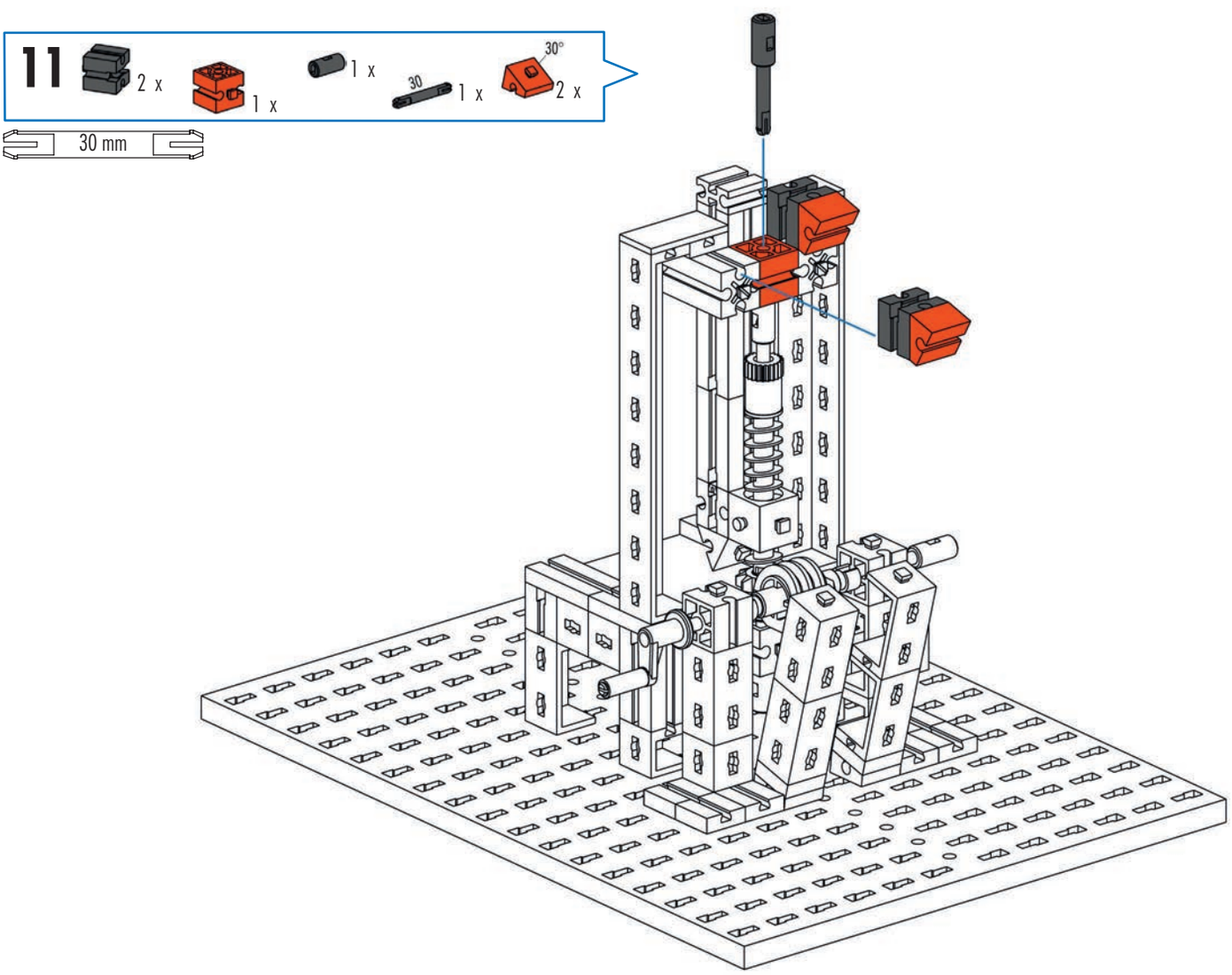
11
2 x
1 x
1 x
30
1 x
30°
2 x
30 mm

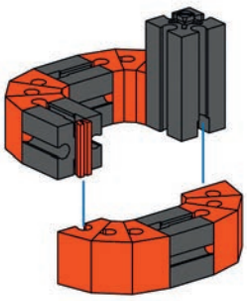

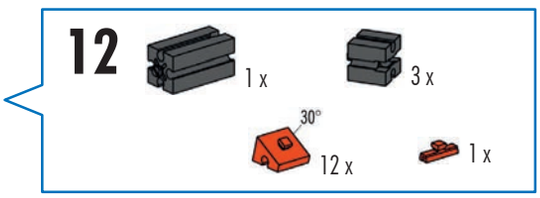

Version 1: Vergrößerung 3-5fach
Version 1: Magnification factor 3-5x
Version 1: Grossissement de 3 à 5 fois

Versie 1: Vergroting 3- tot 5-voudig
Versión 1: 3 a 5 aumentos
Versão 1: Aumento de 3 a 5 vezes

Versione 1: Ingrandimento 3-5x
Версия **1: 3-5** кратное увеличение
版本 **1:** 放大 **3** 至 **5** 倍

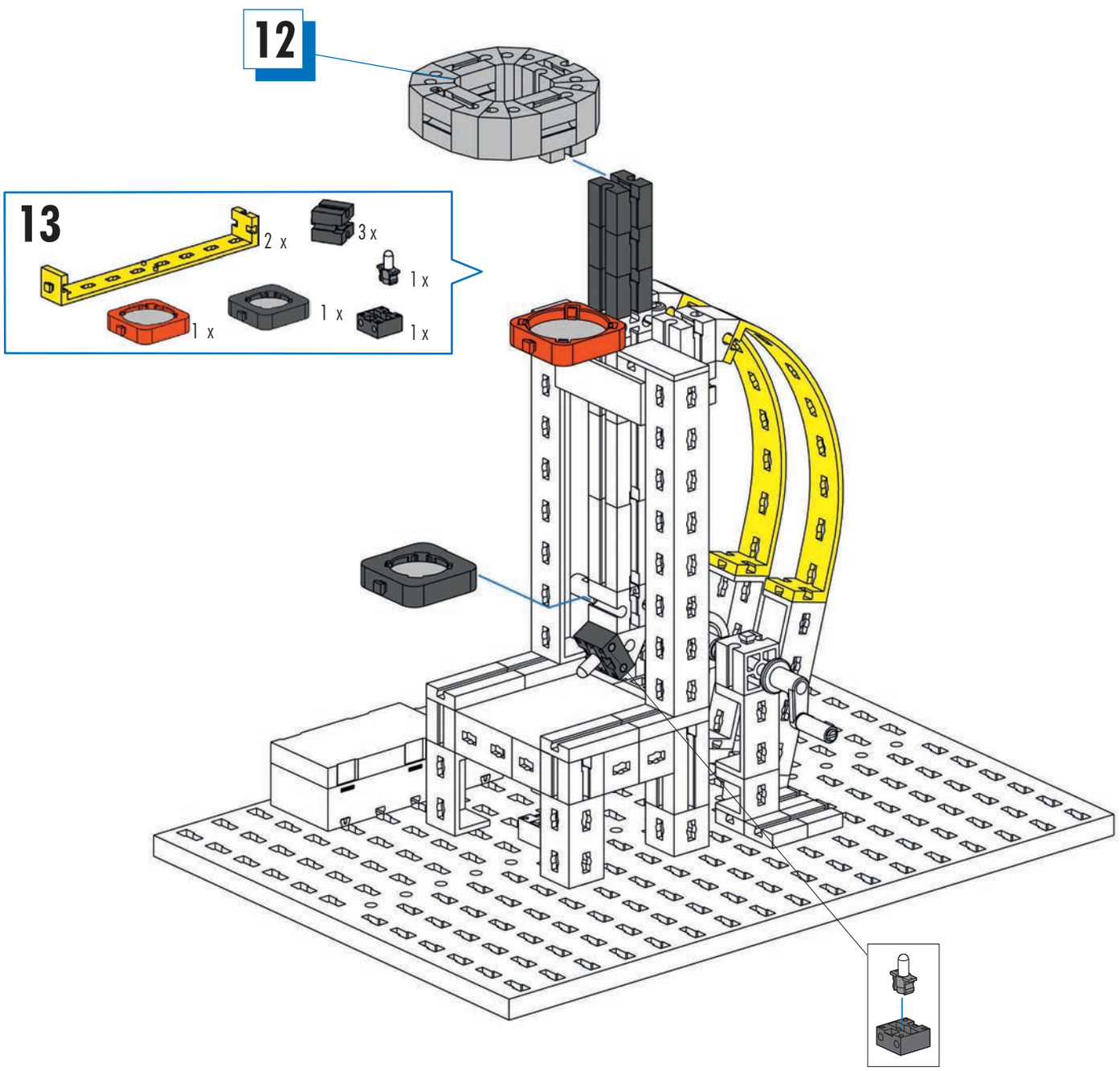

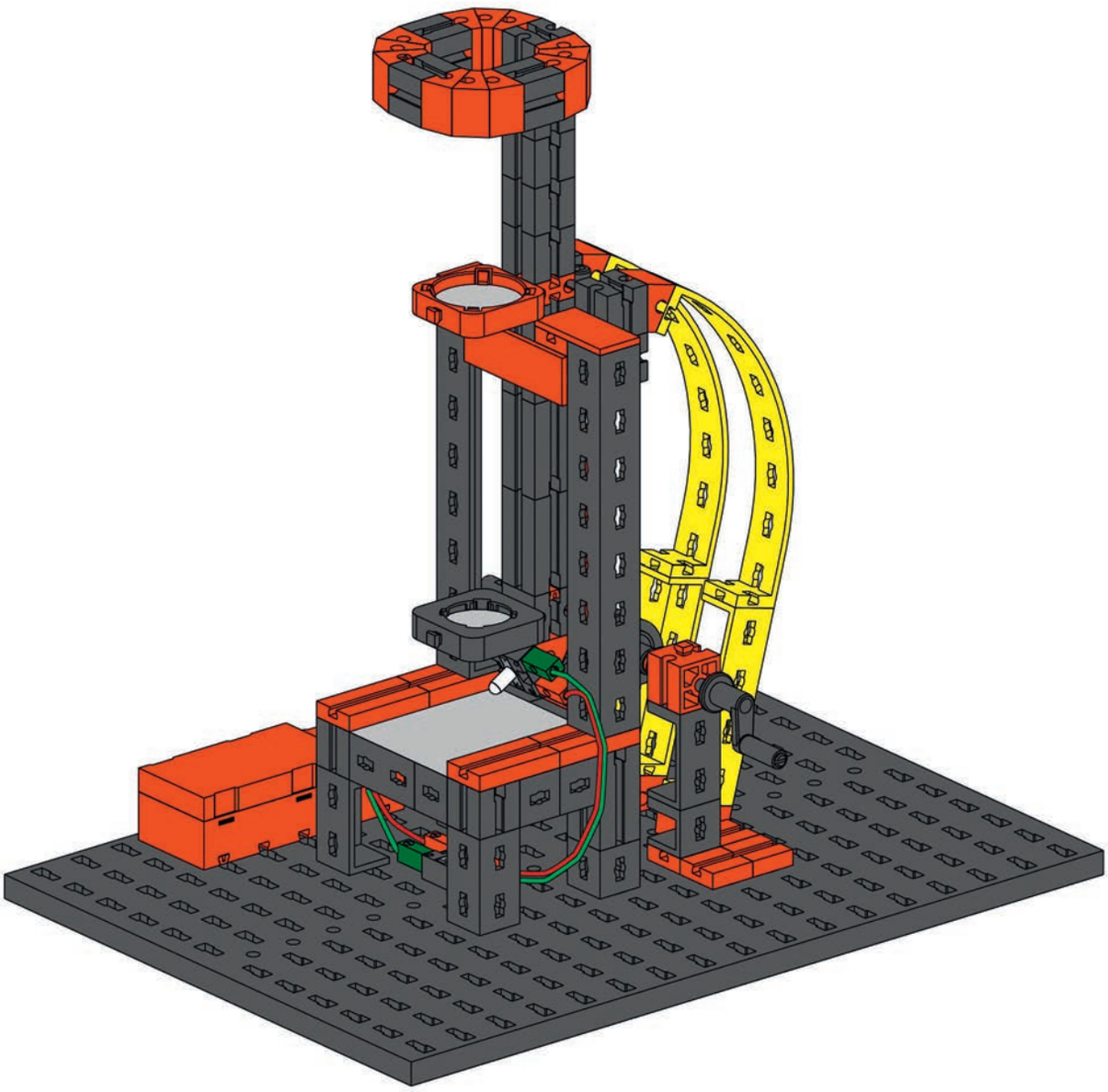

Schaltplan
Circuit diagram
Plan électrique

Schakelschema
Diagrama de circuitos
Plano elétrico de ligação

Schema elettrico
Схема подключения
电路图

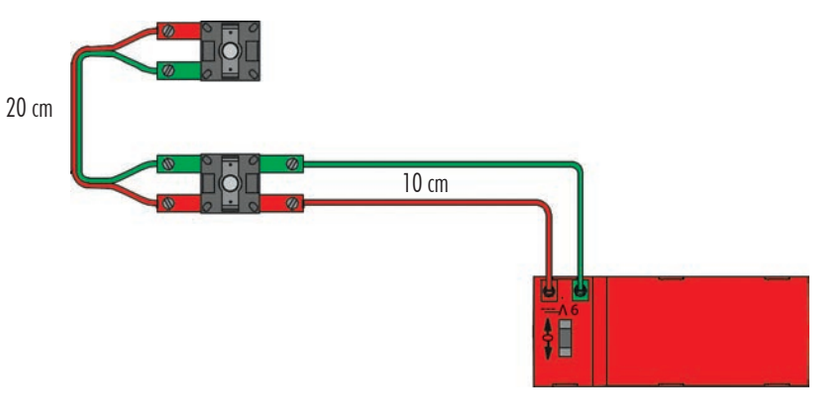

Version 2: Vergrößerung 7-10fach
Version 2: Magnification factor 7-10x
Version 2: Grossissement de 7 à 10 fois

Versie 2: Vergroting 7- tot 10-voudig
Versión 2: 7 a 10 aumentos
Versão 2: Aumento de 7 a 10 vezes

Versione 2: Ingrandimento 7-10x
Версия **2: 7-10** кратное увеличение
版本 **2:** 放大 **7** 至 **10** 倍

1-12

Seite 13
Page 13
Page 13
Bladzijde 13
Página 13
Pagina 13
Pagina 13
Страница 13
页次 13

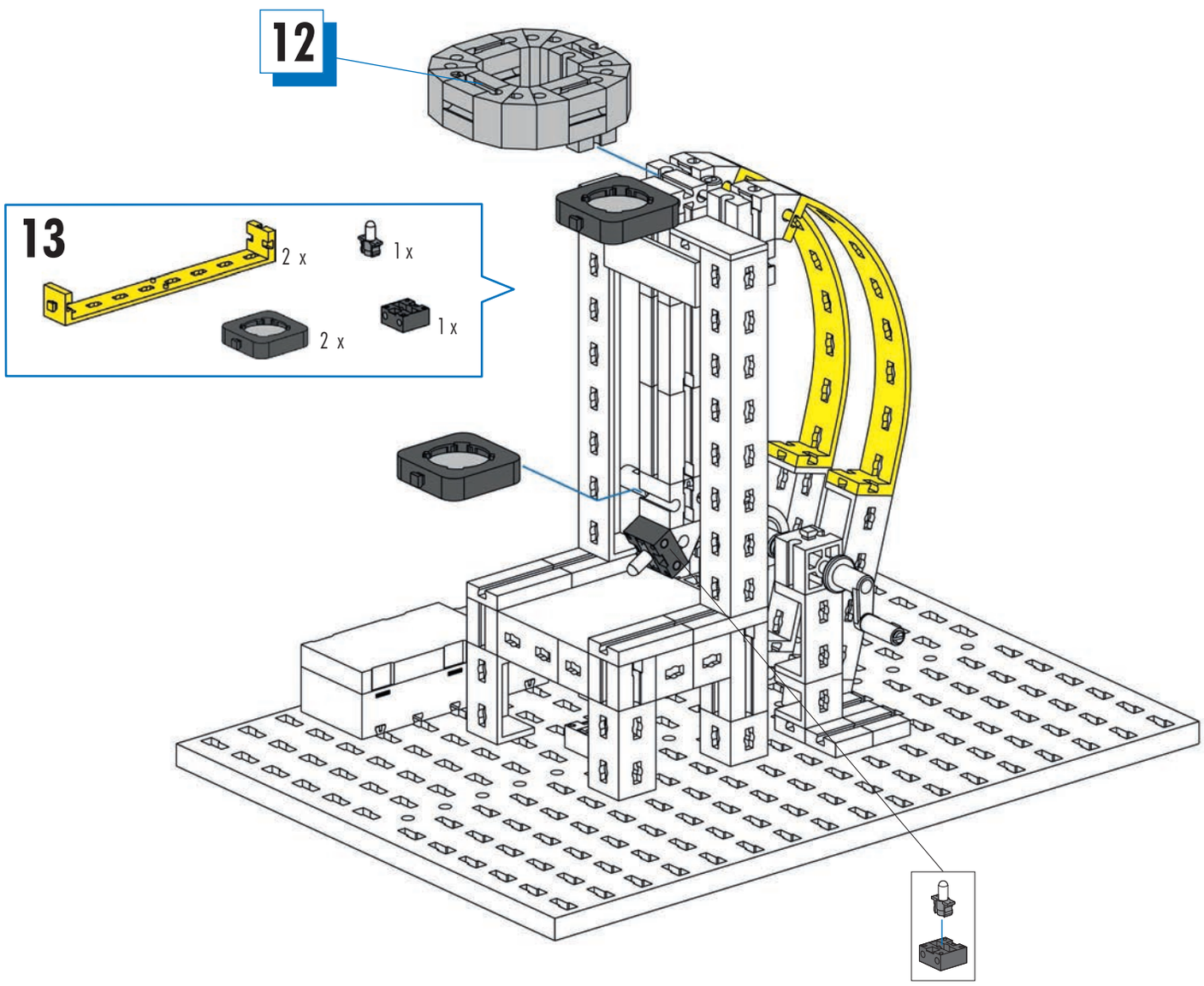

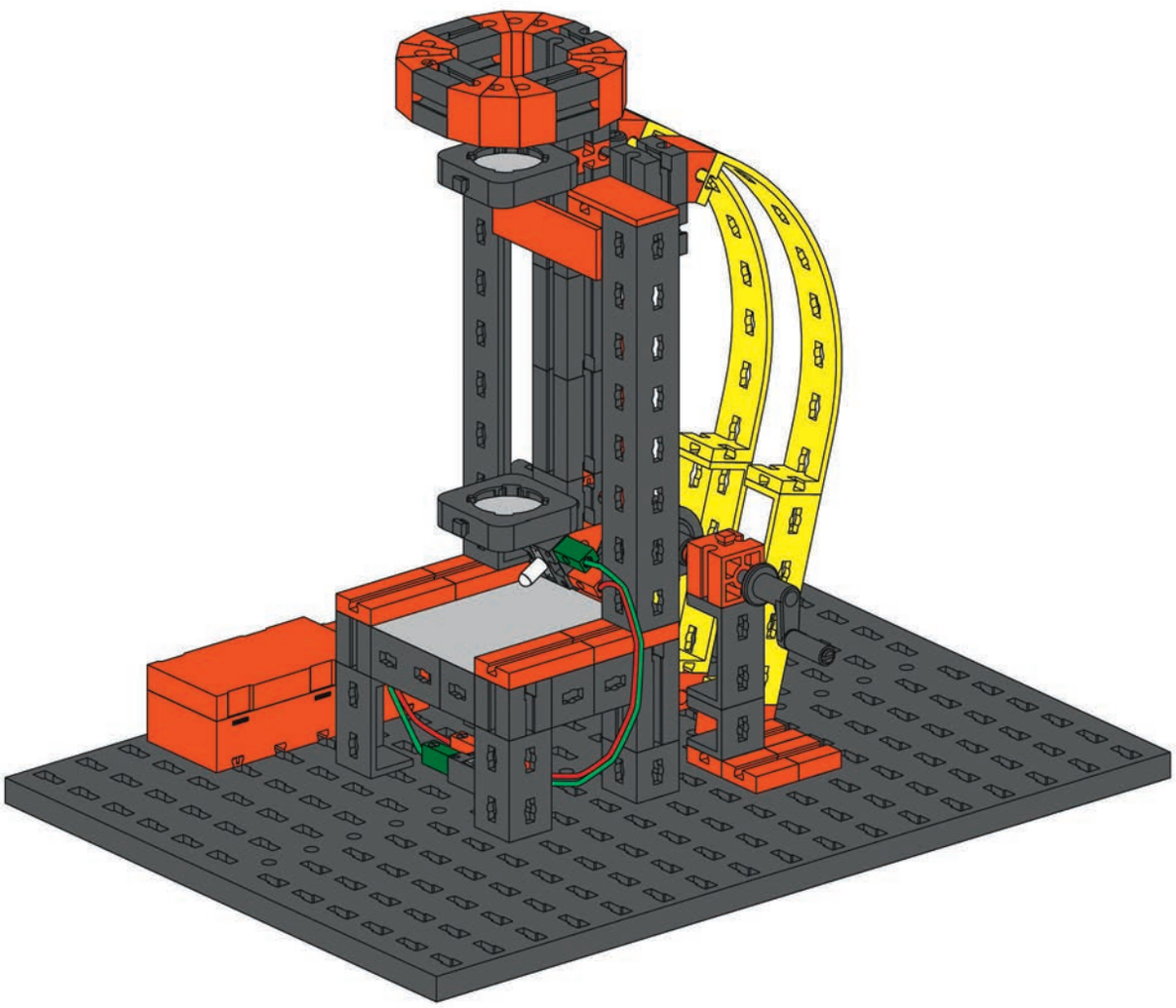

Schaltplan
Circuit diagram
Plan électrique

Schakelschema
Diagrama de circuitos
Plano elétrico de ligação

Schema elettrico
Схема подключения
电路图

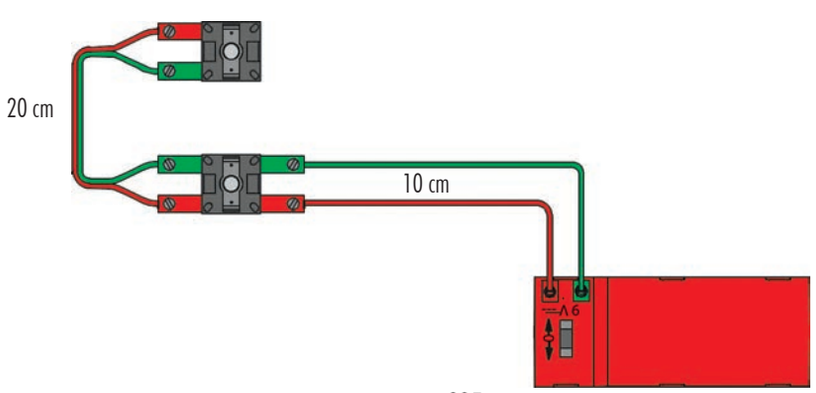

835

Astronomisches Fernrohr
Astronomical telescope
Télescope astronomique
Telescoop
Telescopio astronómico
Telescópio astronômico
Telescopio astronomico
Астрономический телескоп
天文望远镜

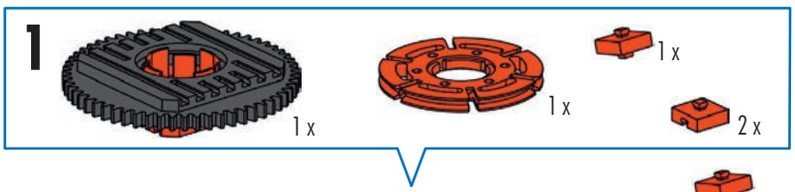

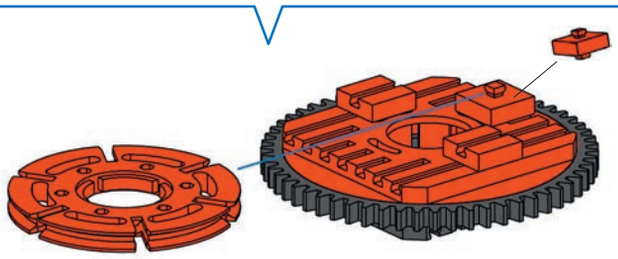

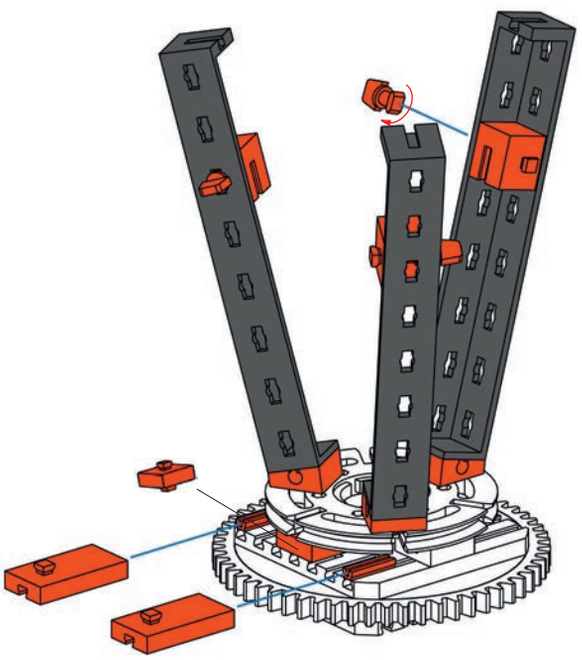

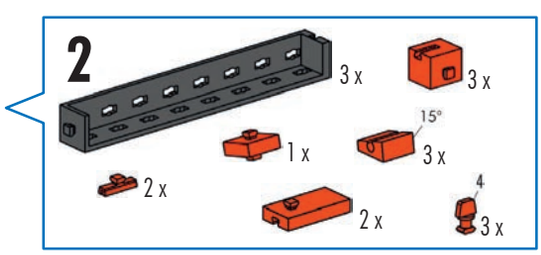

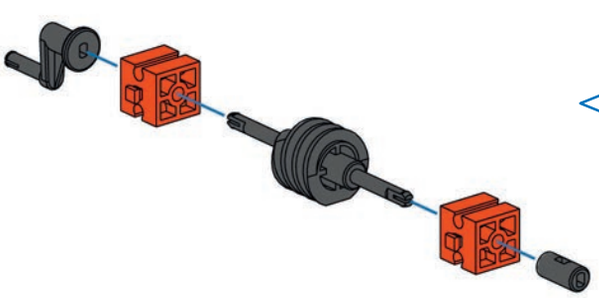

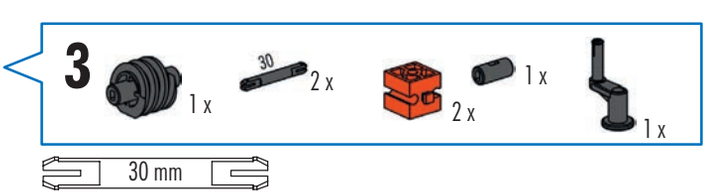

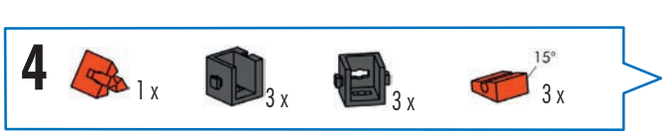

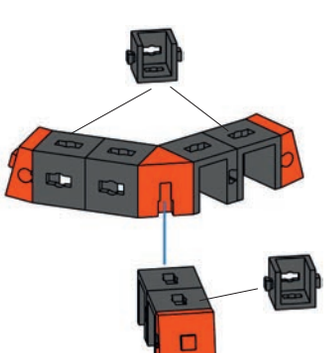

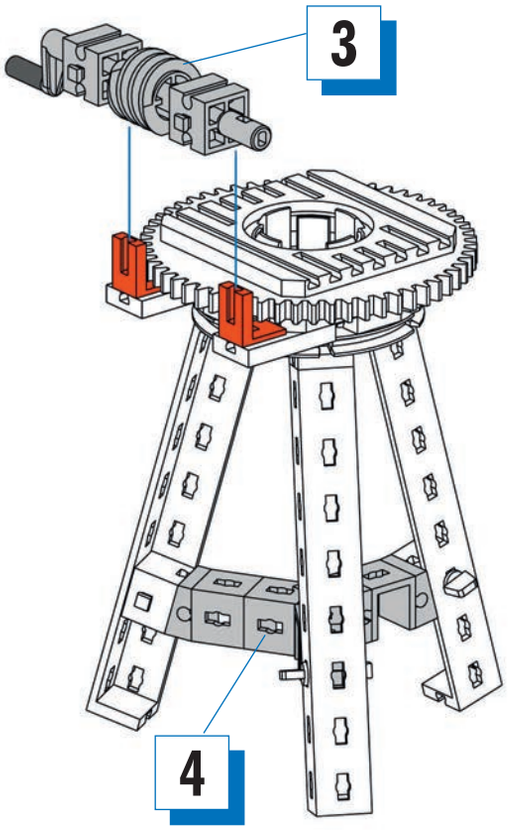

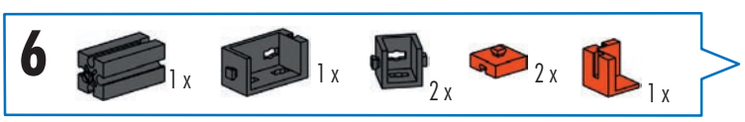

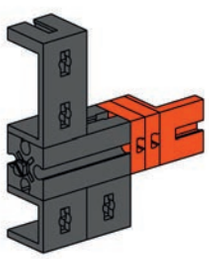

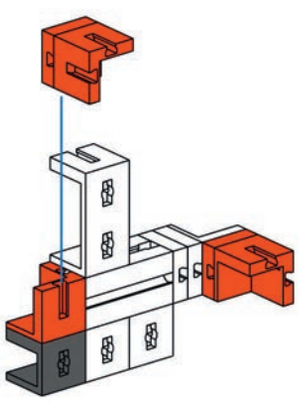

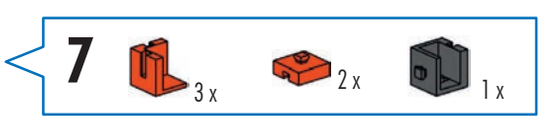

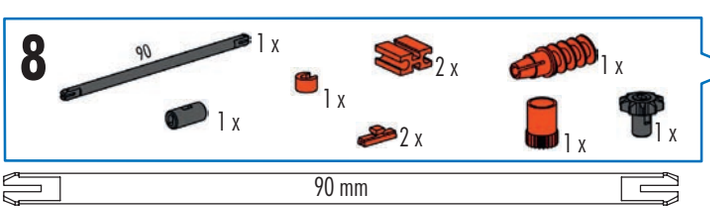

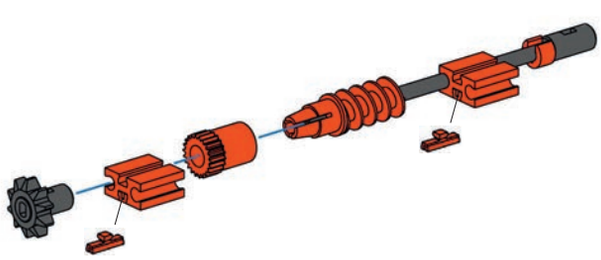

837

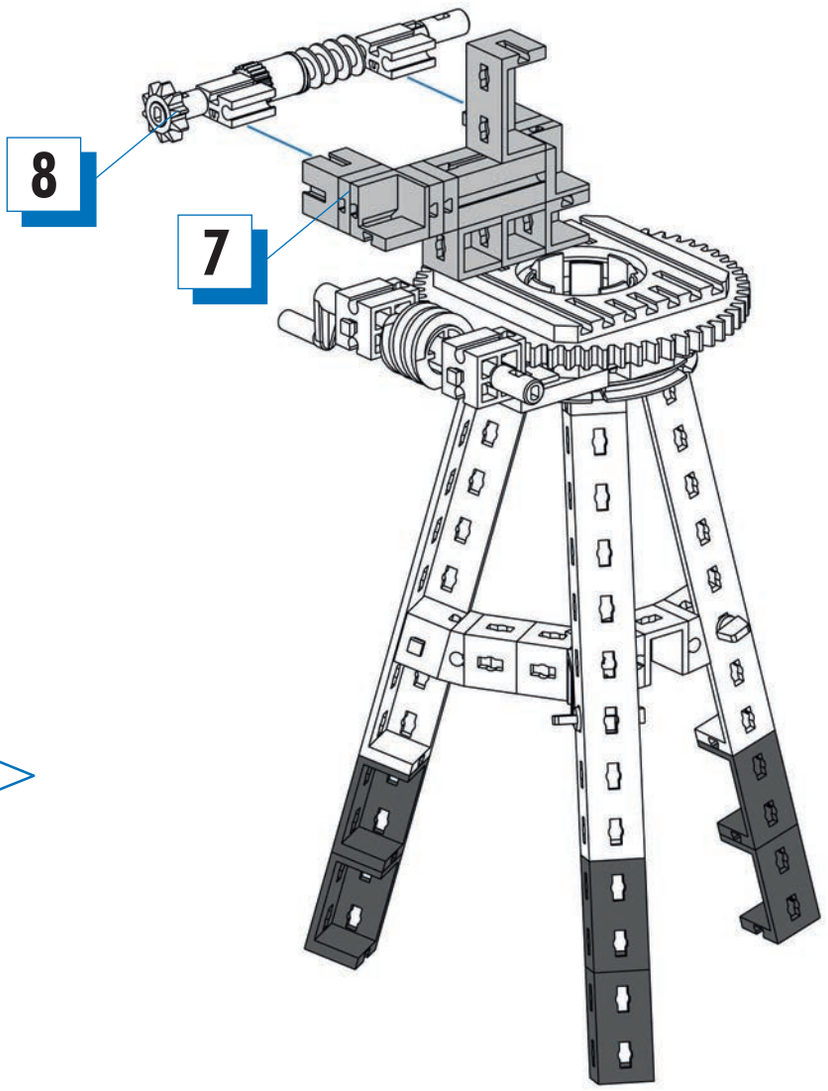
8
7

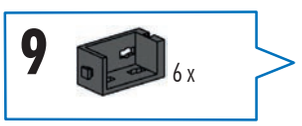
9
6 x

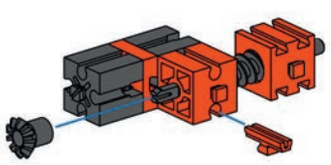

10
2 x
1 x
1 x
1 x
1 x
1 x
1 x

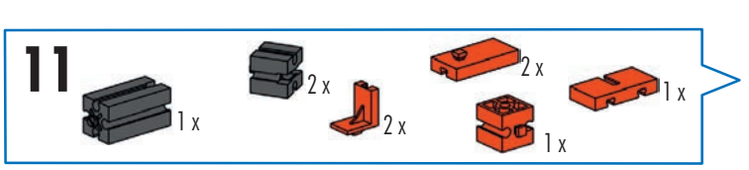
11
1 x
2 x
2 x
2 x
1 x
1 x

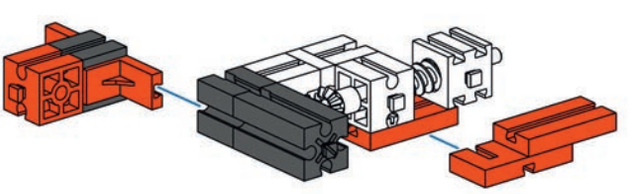

12

1 x

1 x

1 x

1 x

1 x

3 x

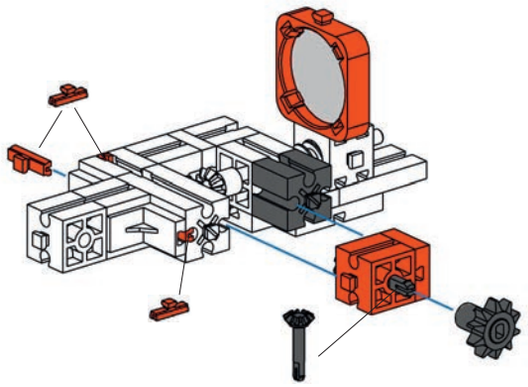

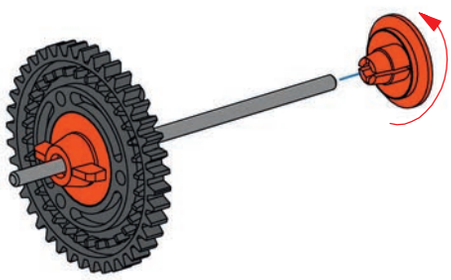

13

110

1 x

1 x

1 x

1 x

110 mm

14

2 x

1 x

1 x

1 x

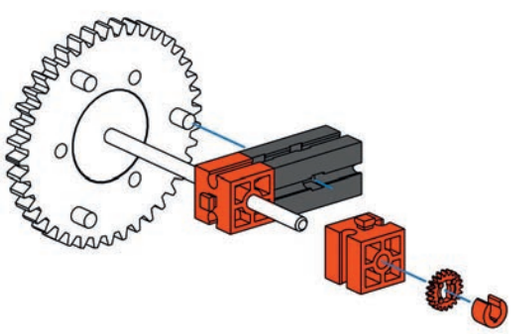

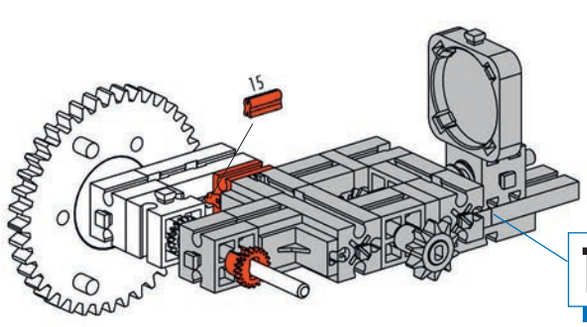

12

15

1 x

15

1 x

1 x

1 x

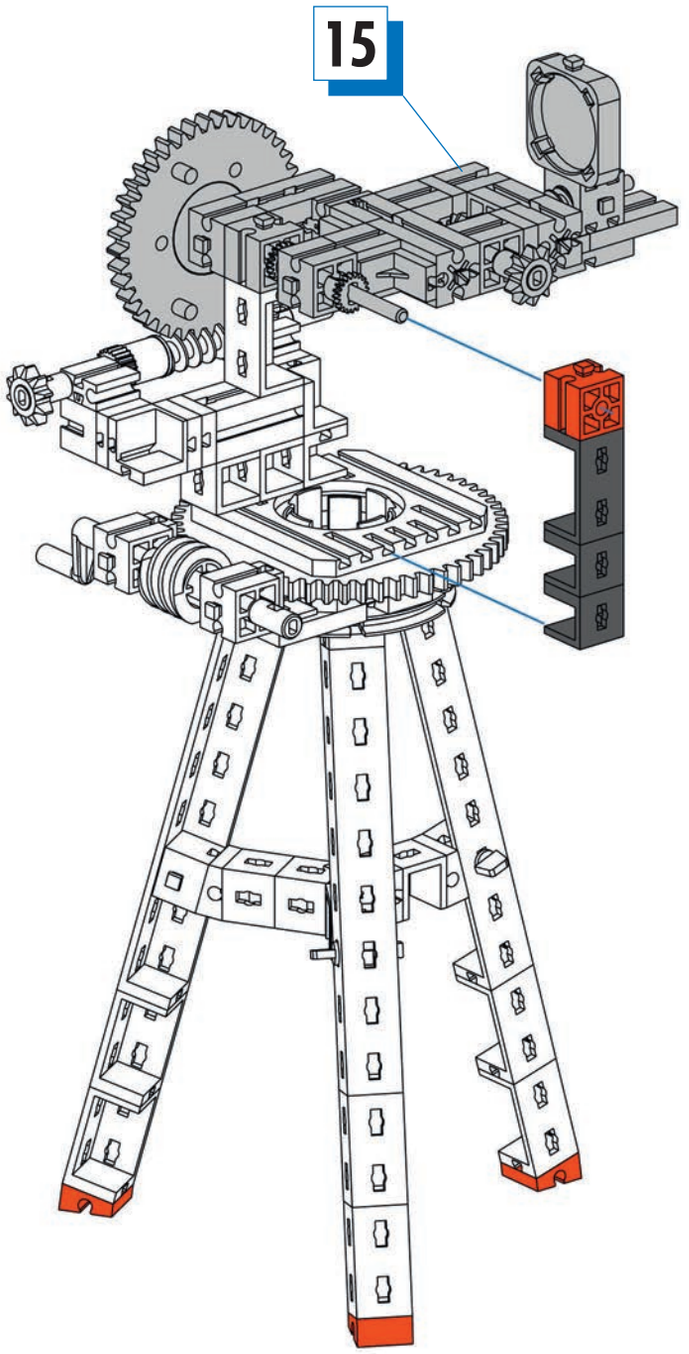
15

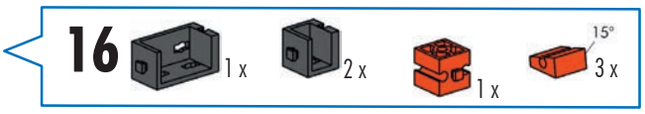
16
1 x
2 x
1 x
15°
3 x

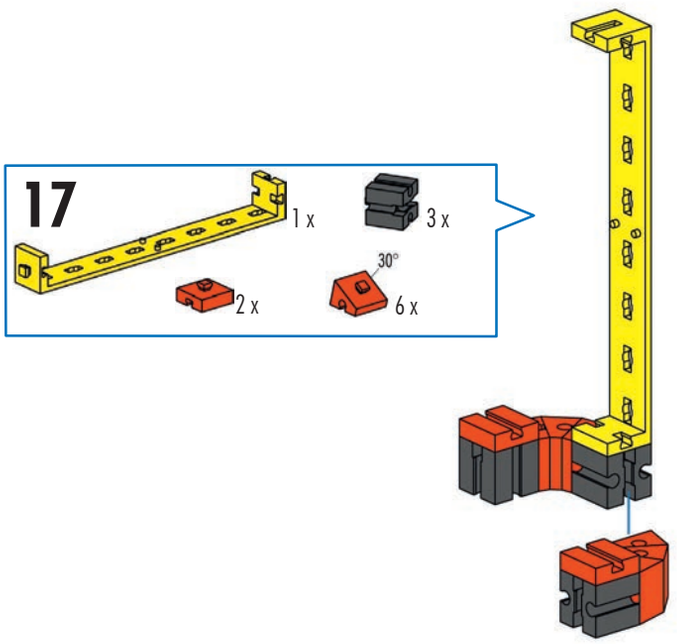
17
1 x
3 x
2 x
30°
6 x

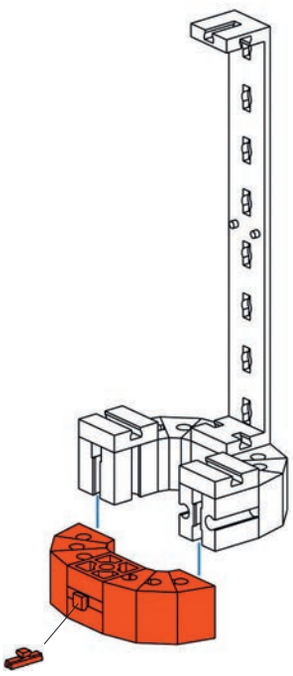

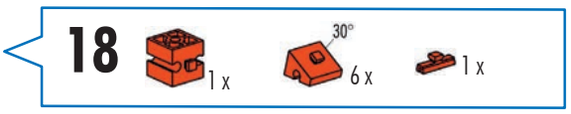
18
1 x
30°
6 x
1 x

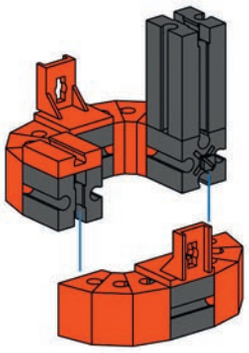

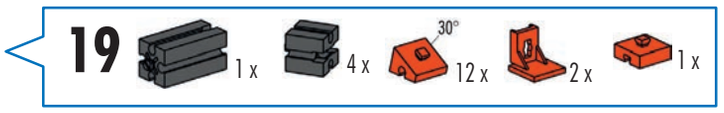

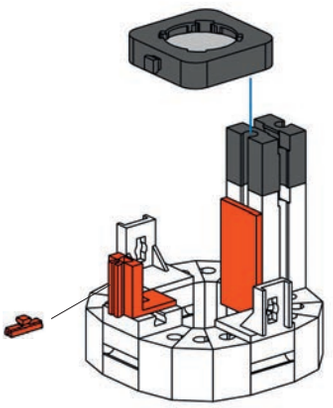

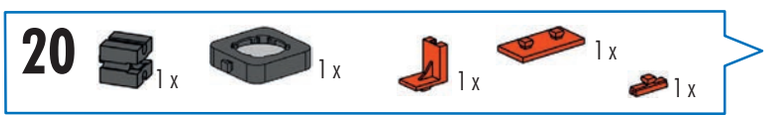

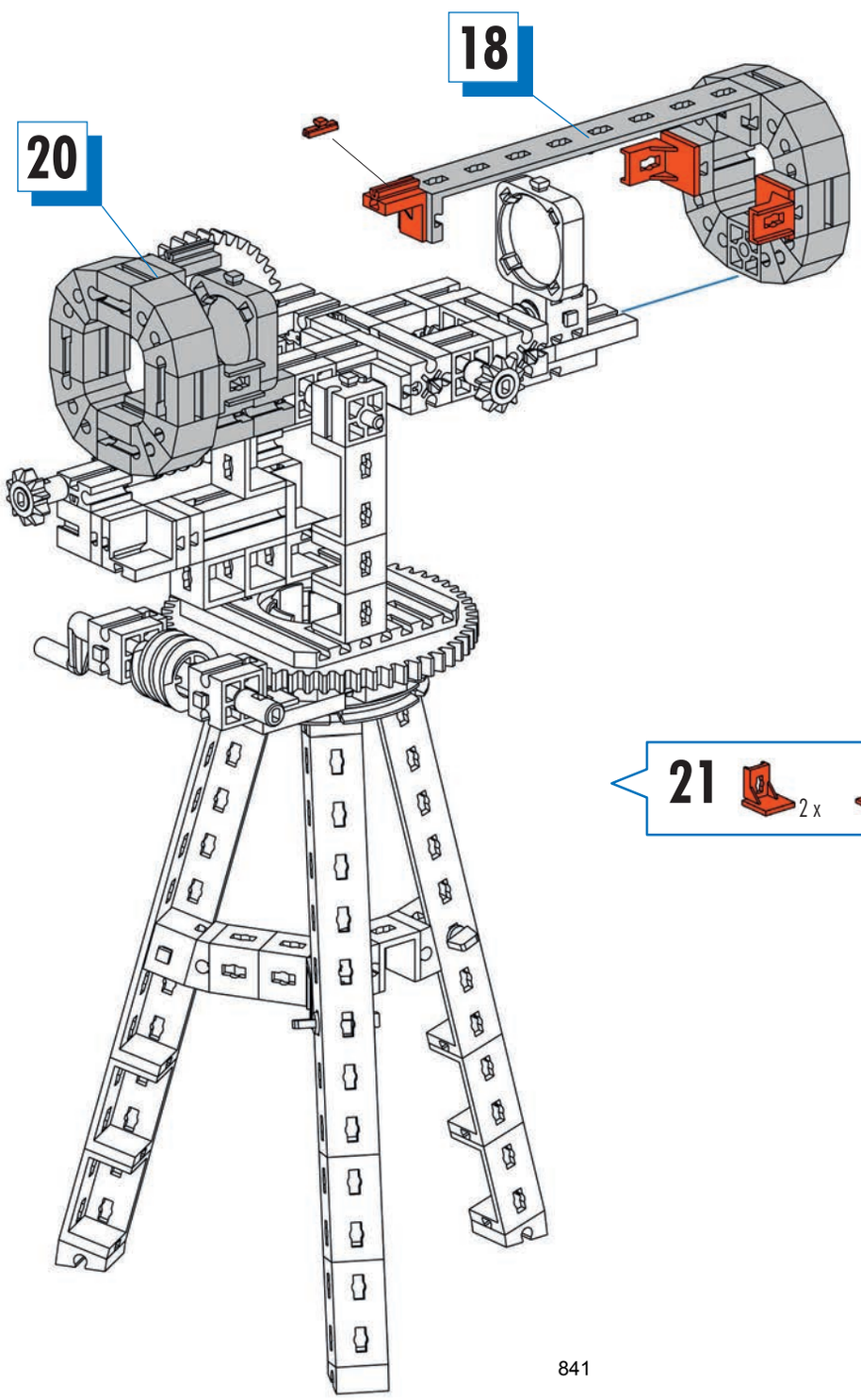

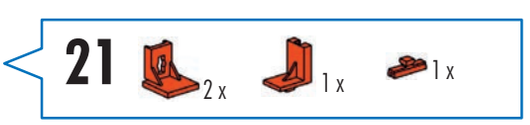

841

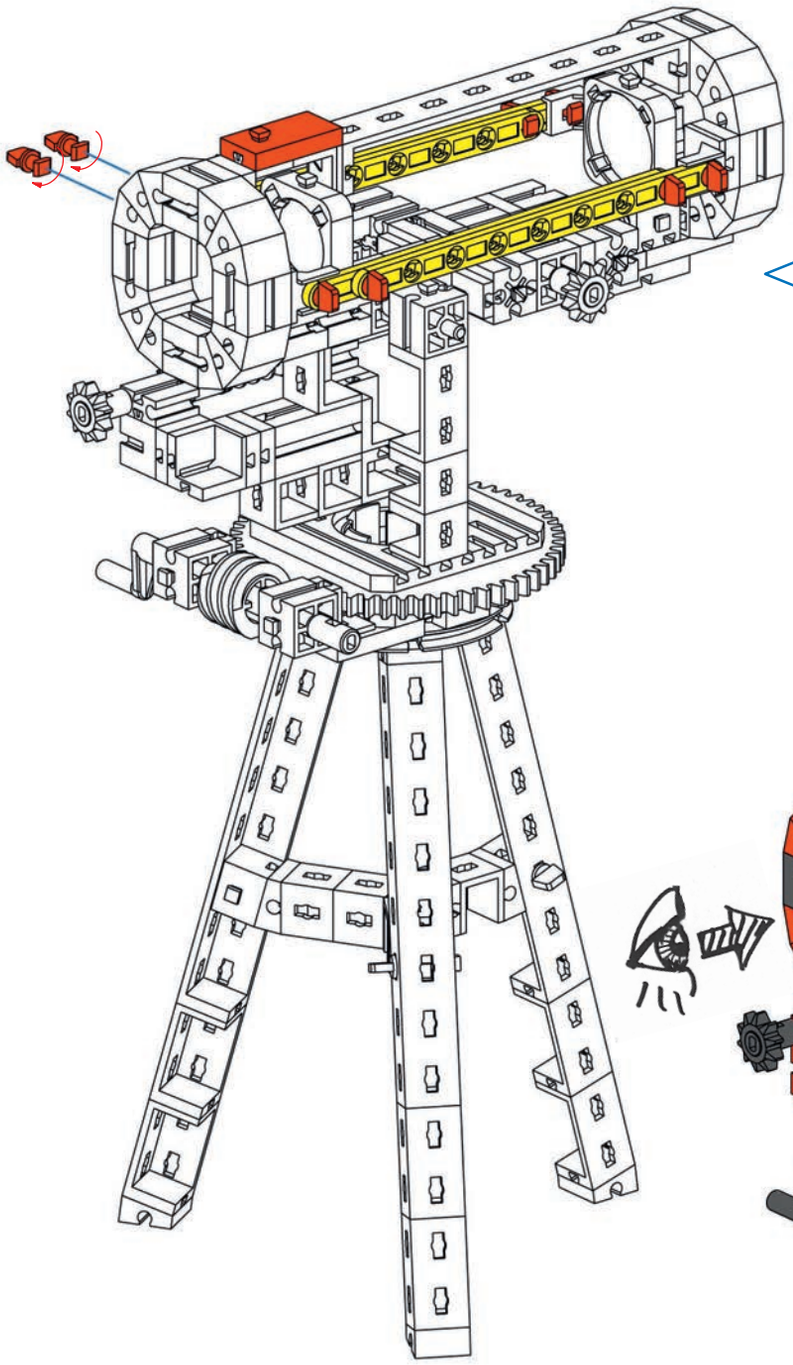

22
120
4 x
4
8 x
1 x

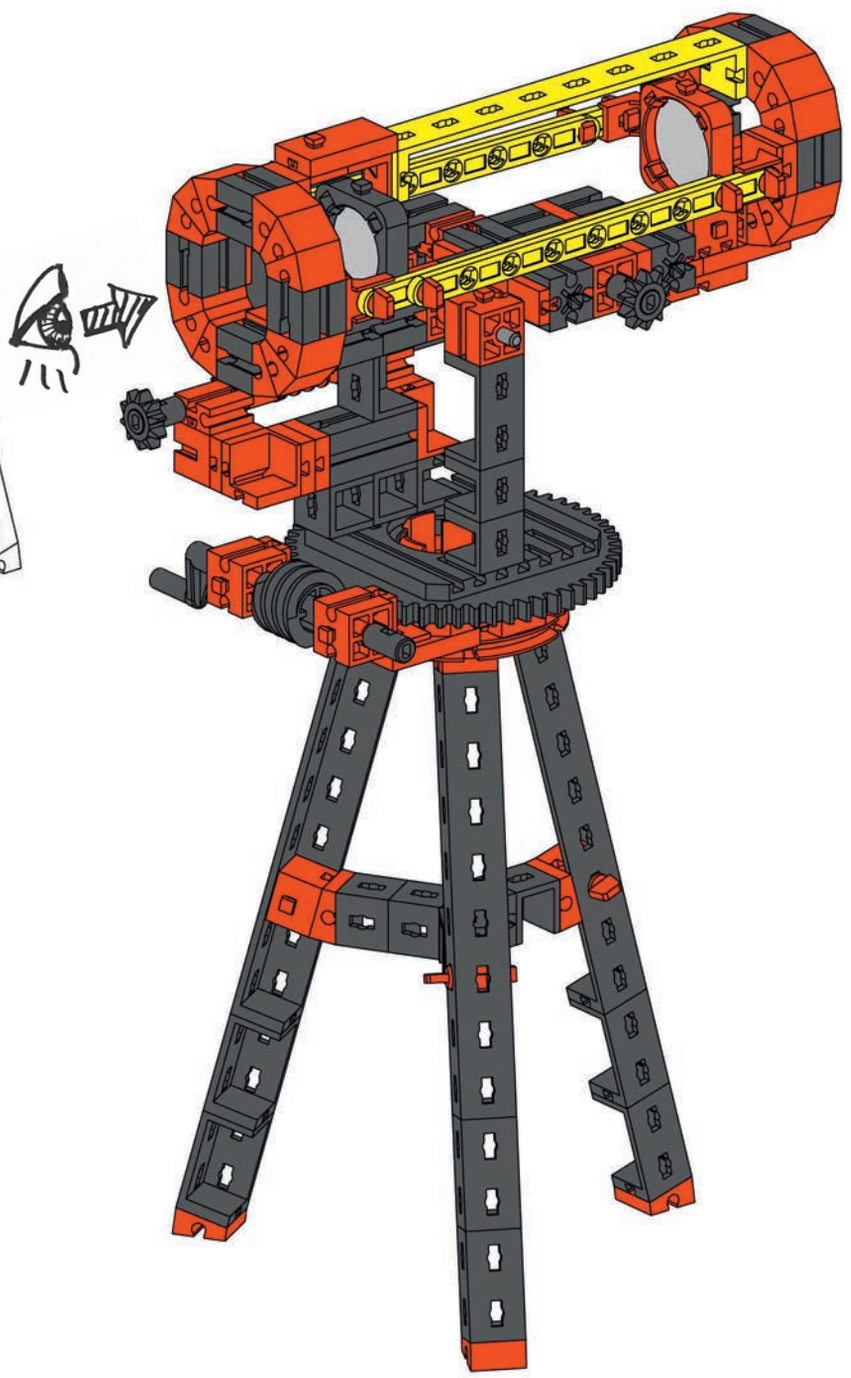

Erdfernrohr
Erecting telescope
Télescope terrestre
Terrestrische telescoop
Telescopio terrestre
Telescópio terrestre
Telescopio terrestre
Подзорная труба
折射望远镜

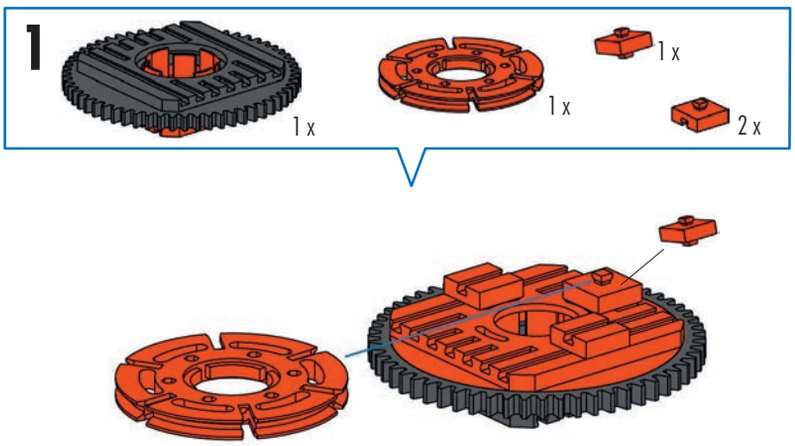

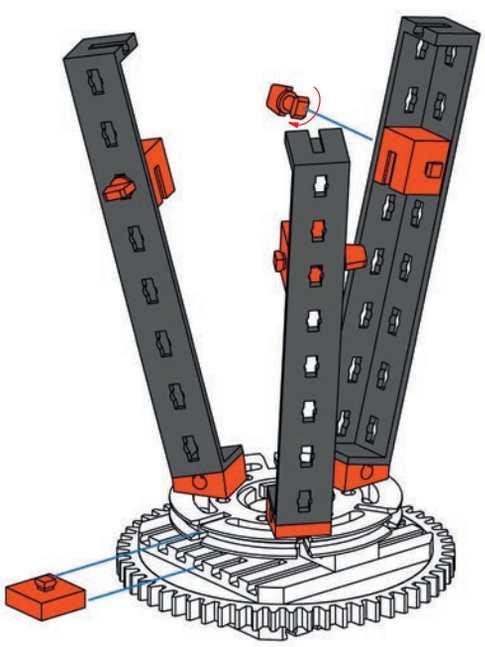

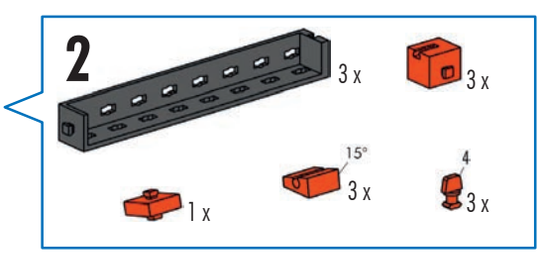

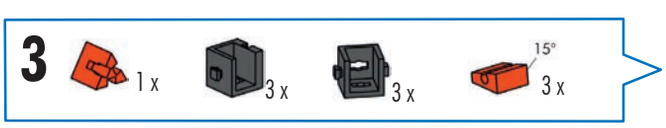

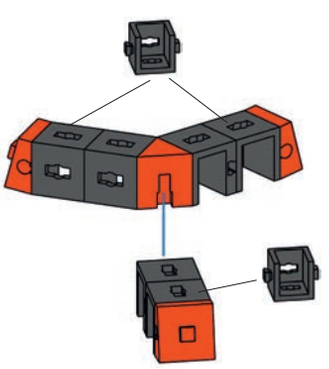

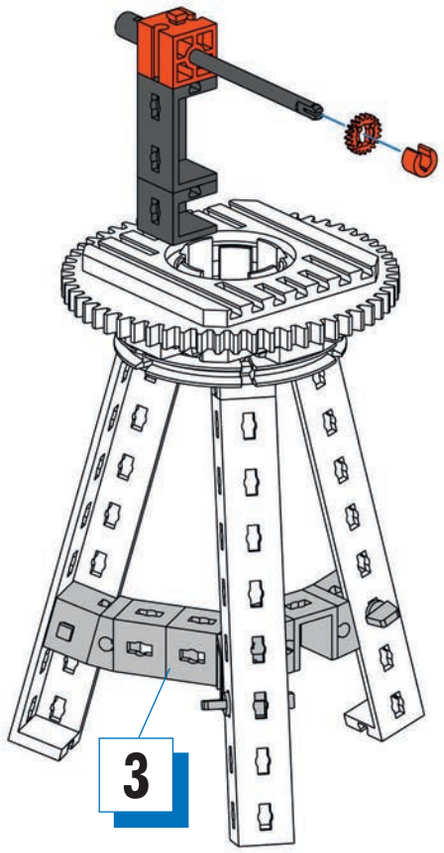
3

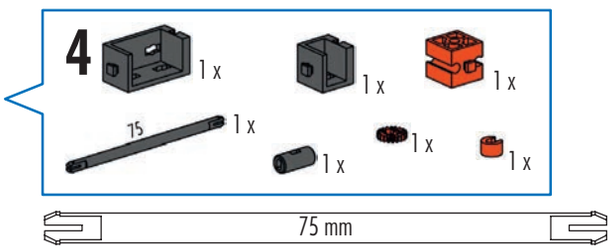
4
1 x
1 x
1 x
75
1 x
1 x
1 x
1 x
75 mm

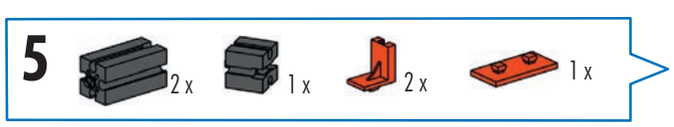
5
2 x
1 x
2 x
1 x

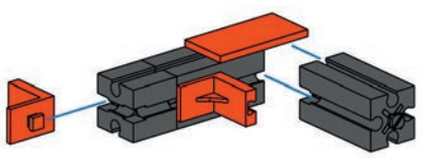

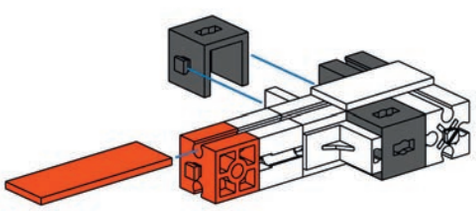

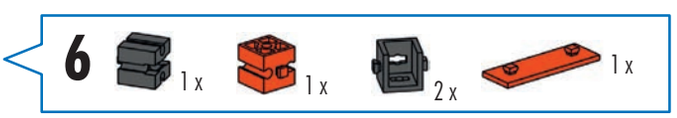
6
1 x
1 x
2 x
1 x

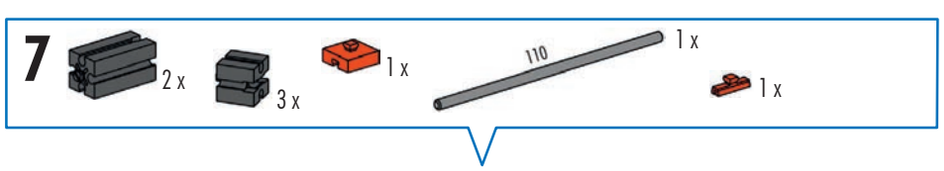
7
2 x
3 x
1 x
110
1 x
1 x

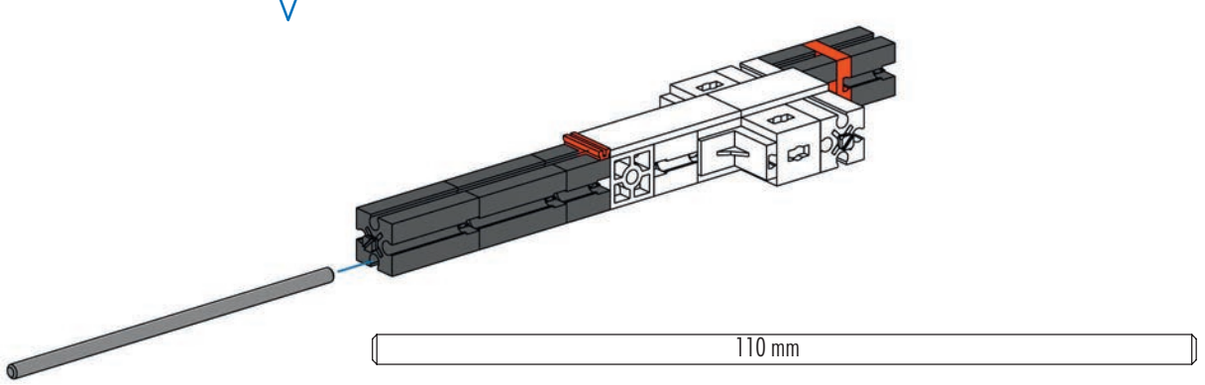
110 mm

844

8

1 x 1 x 1 x 1 x 1 x 1 x

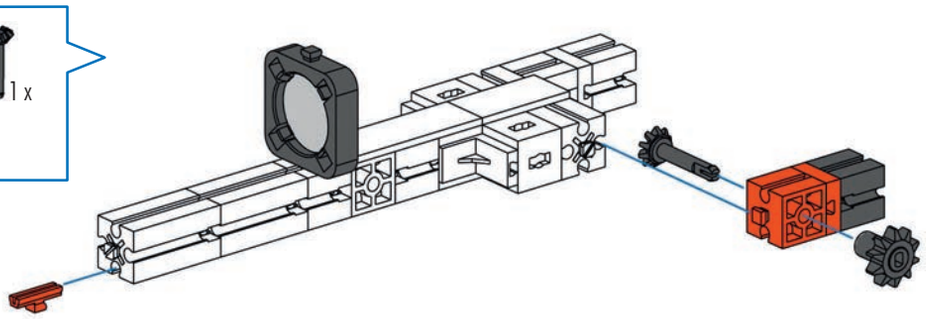

9

1 x 1 x 1 x 1 x 1 x 2 x 1 x

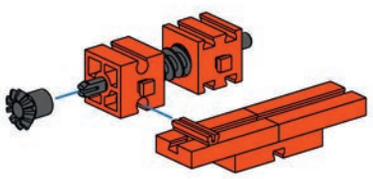

10

1 x 1 x 1 x 1 x 2 x

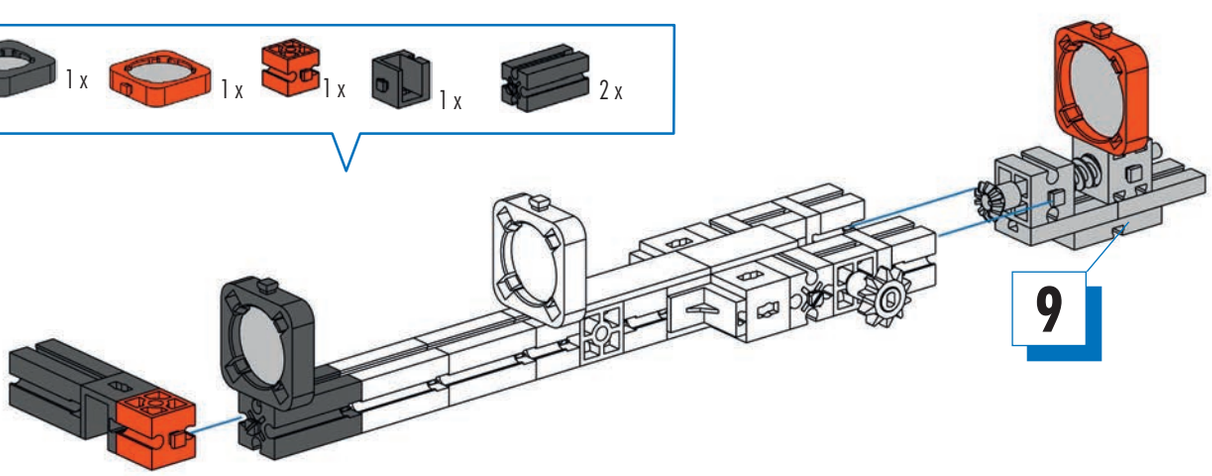

11

1 x 3 x 30° 6 x 2 x

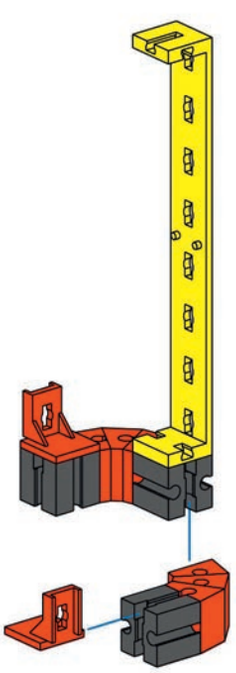

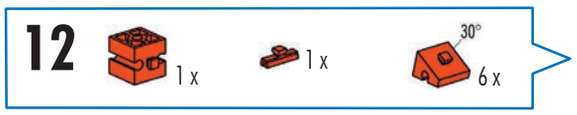
12
1 x
1 x
30°
6 x

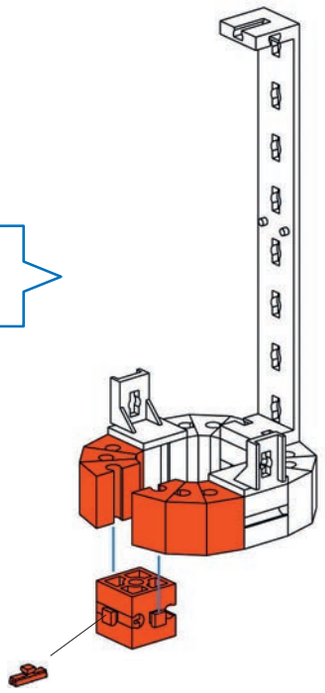

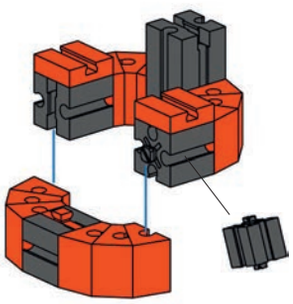

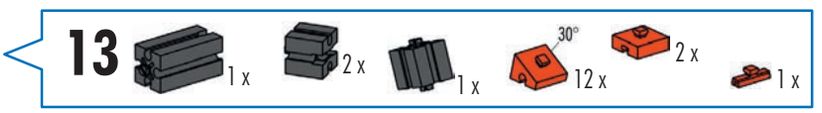
13
1 x
2 x
1 x
30°
12 x
2 x
1 x

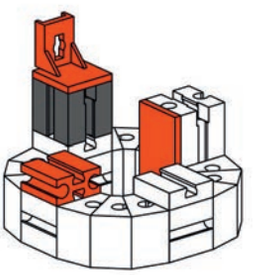

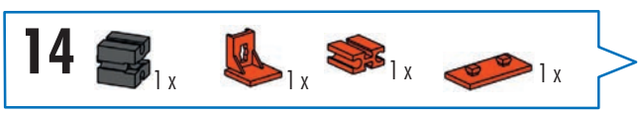
14
1 x
1 x
1 x
1 x

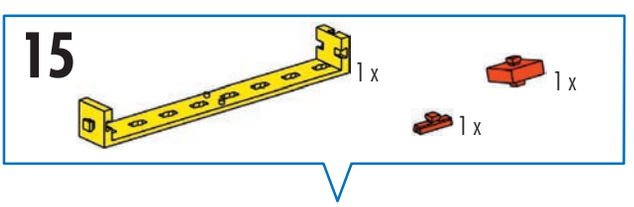
15
1 x
1 x
1 x

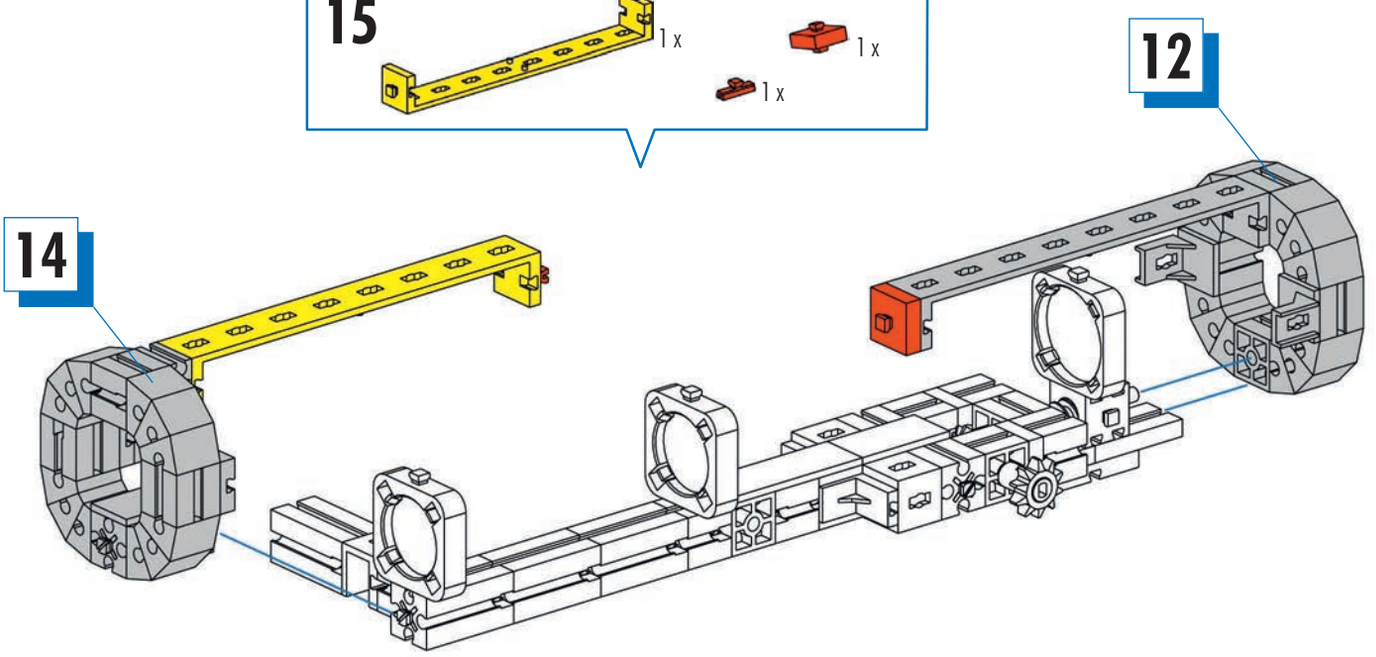
12
14

16

7 x

1 x

15°
3 x

1 x

1 x

1 x

120
4 x

1 x

1 x

1 x

1 x

4
8 x

15

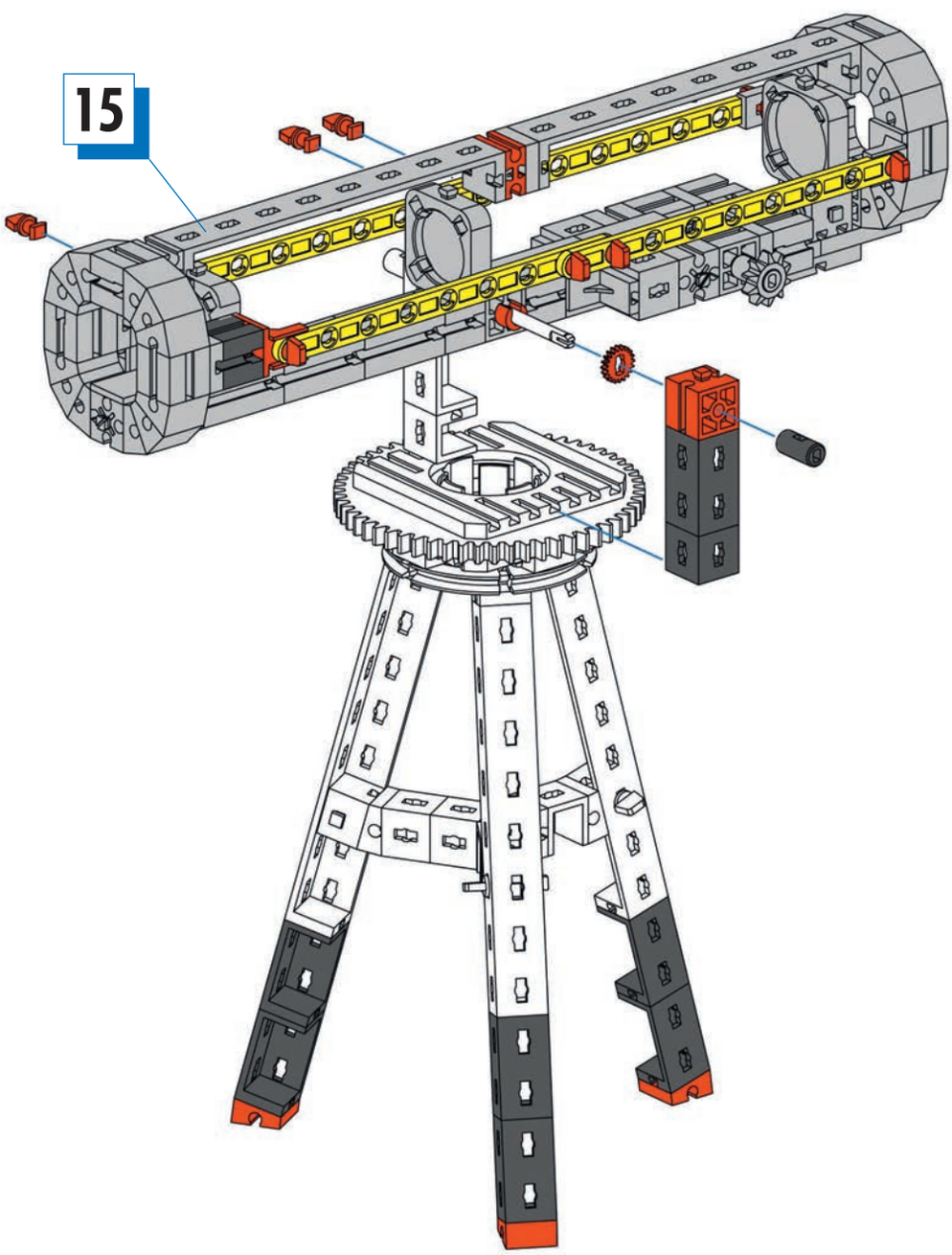

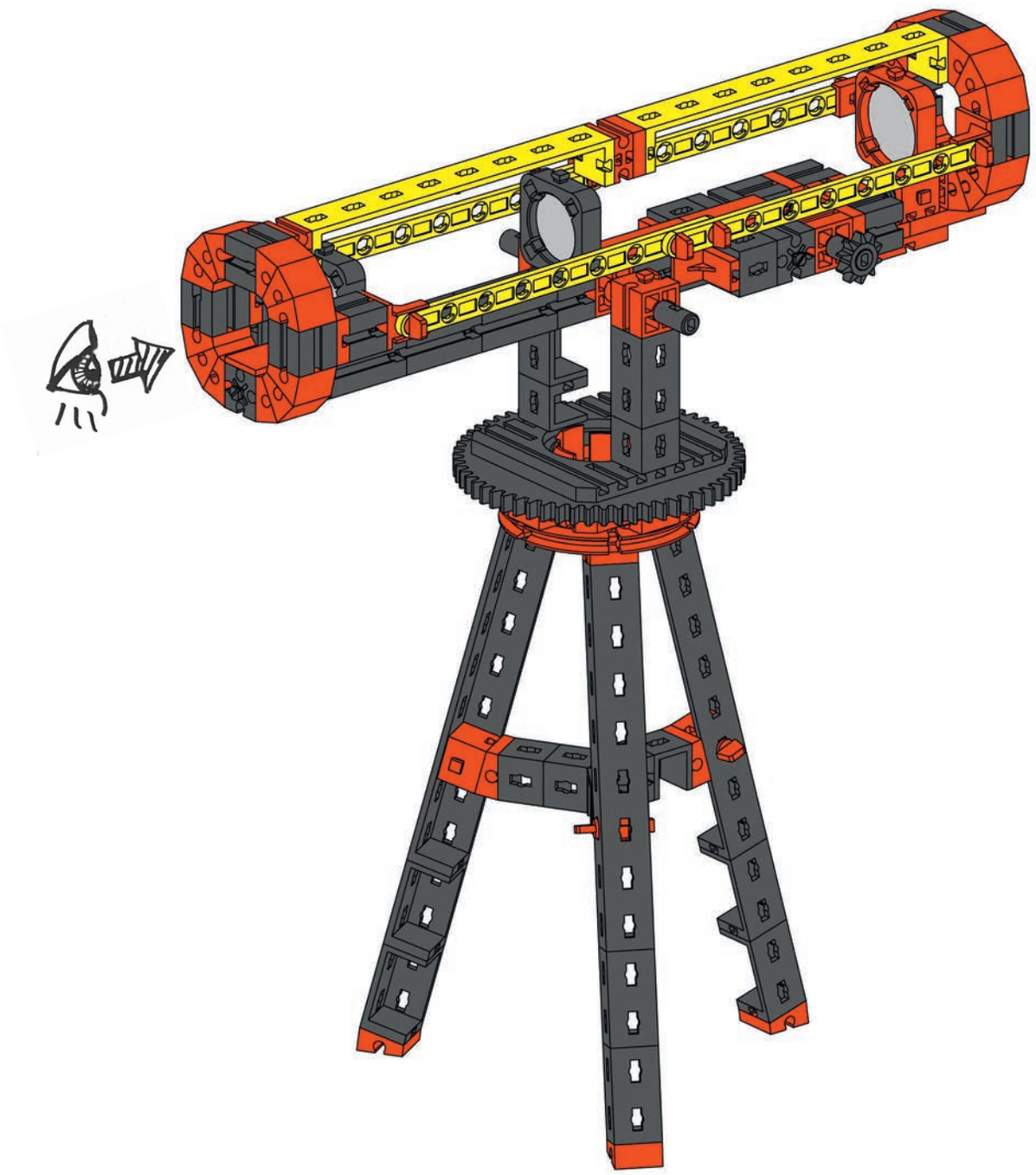

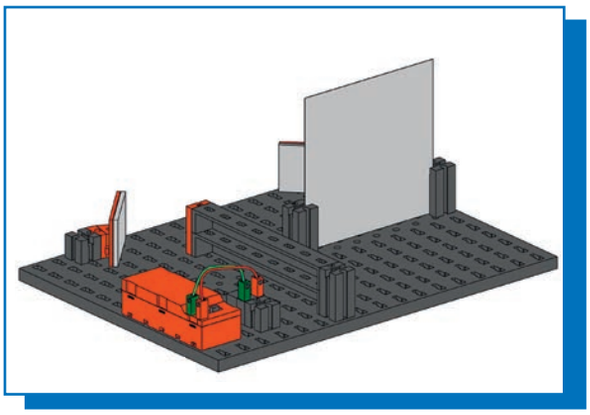

Spiegelparcours
Mirror course
Parcours à miroir

Spiegelparcours
Pista de recorrido de espejo
Percurso de espelhos

Percorso specchio
Зеркальный маршрут
镜子障碍物跑道

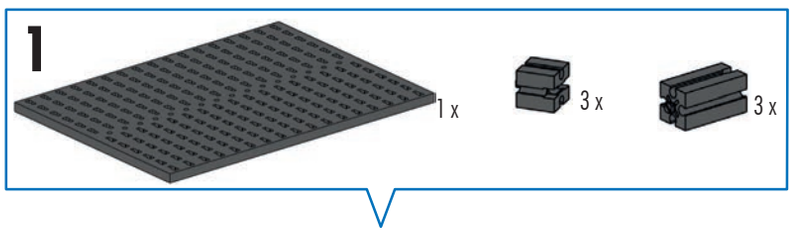

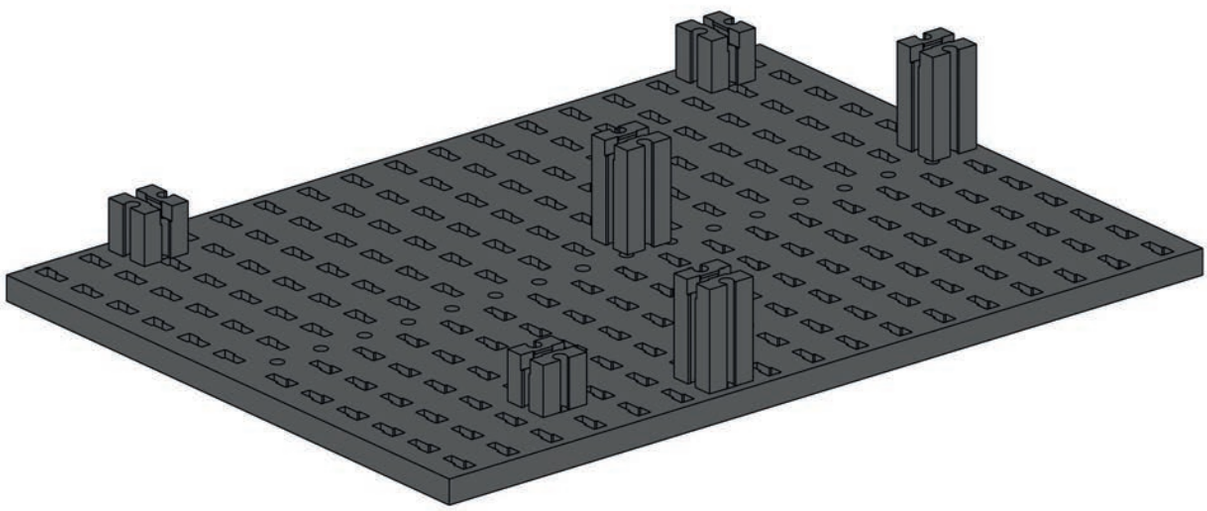

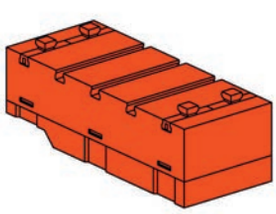

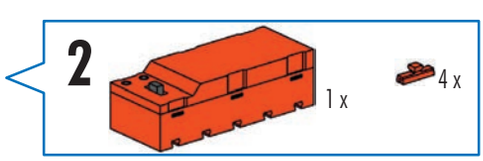

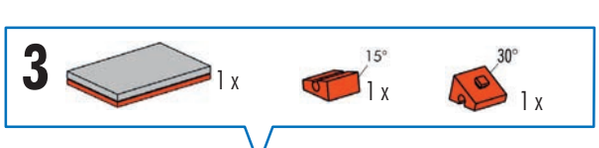

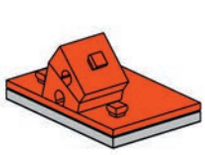

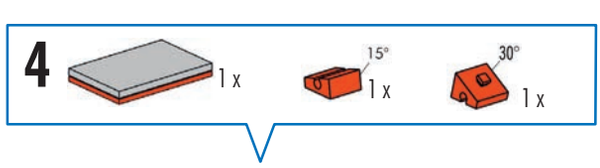

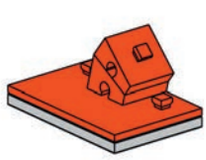

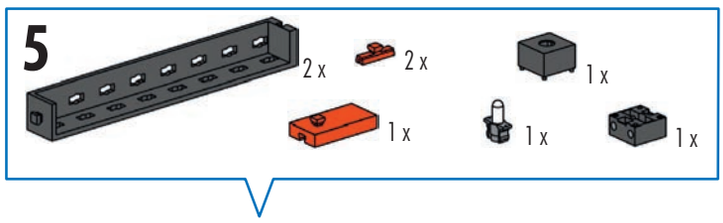

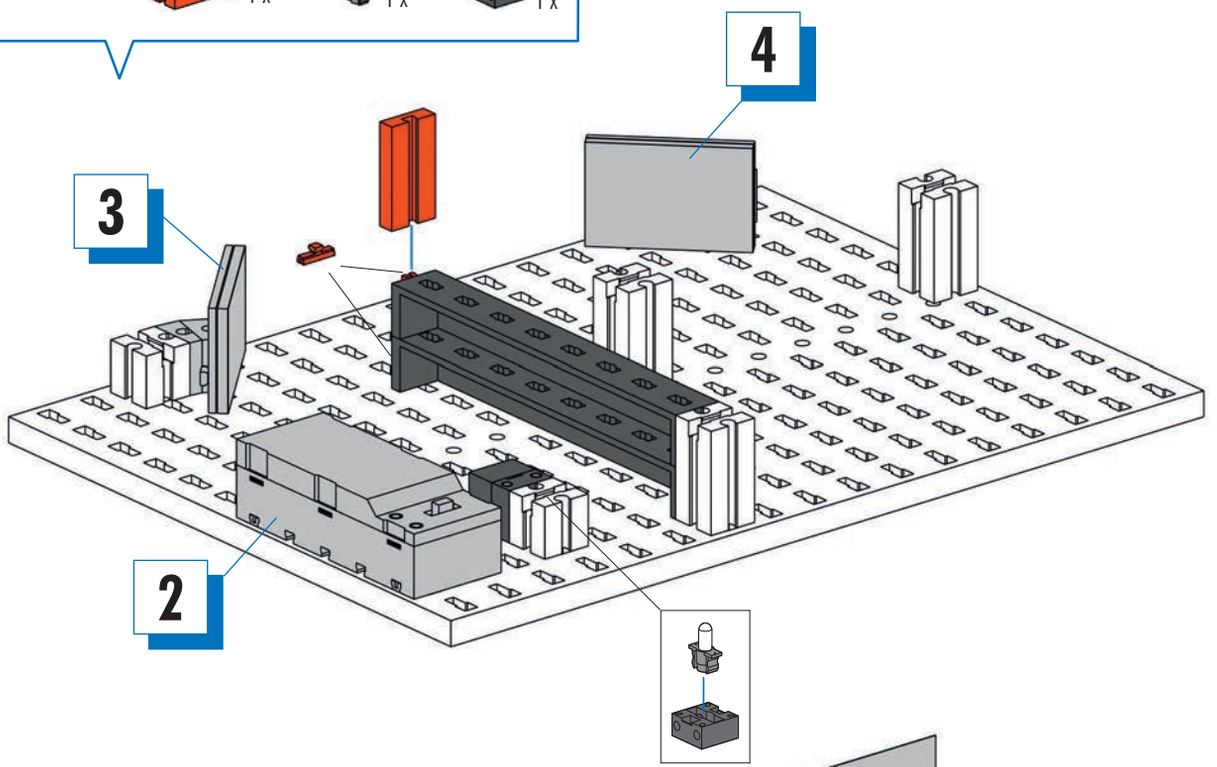

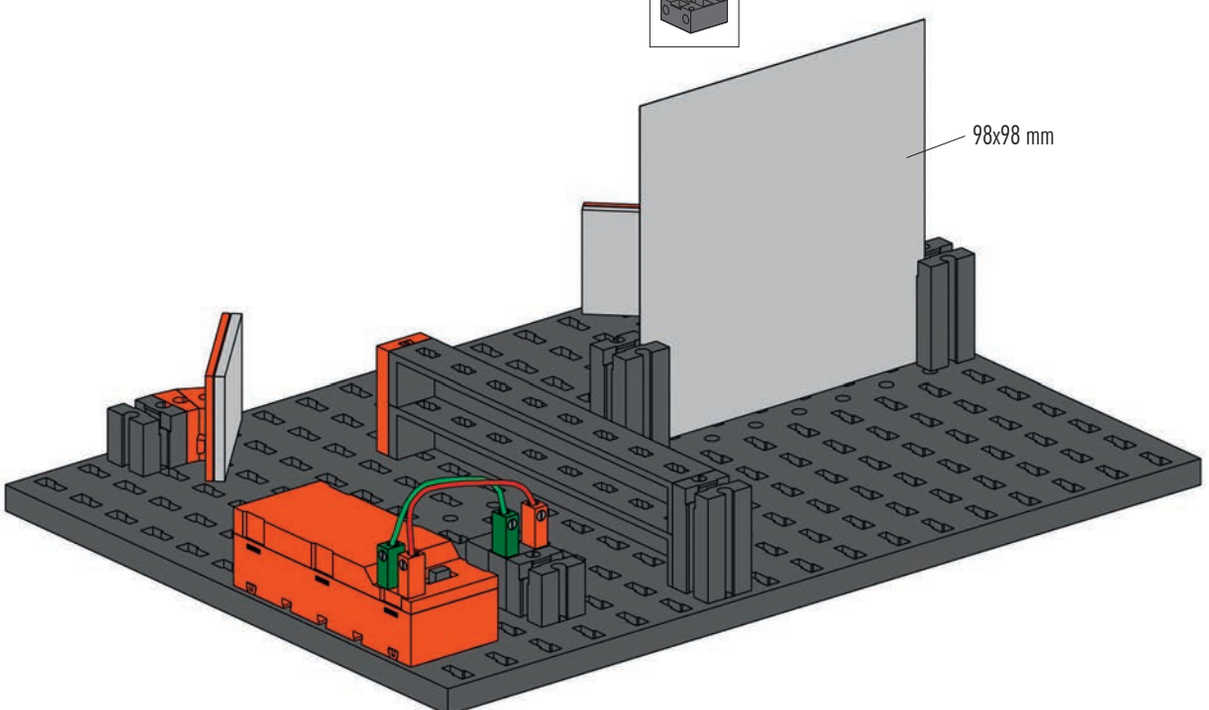

Schaltplan
Circuit diagram
Plan électrique

Schakelschema
Diagrama de circuitos
Plano elétrico de ligação

Schema elettrico
Схема подключения
电路图

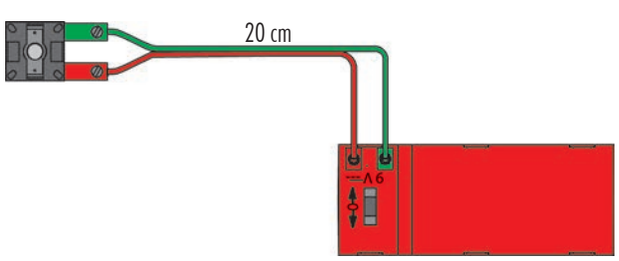

850

Periskop
Periscope
Périscope
Periscoop
Periscopio
Periscópio
Periscopio
Перископ
潜望镜

1

4 x

4 x

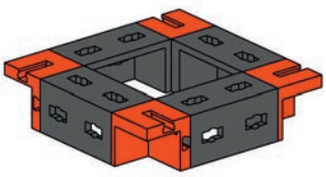

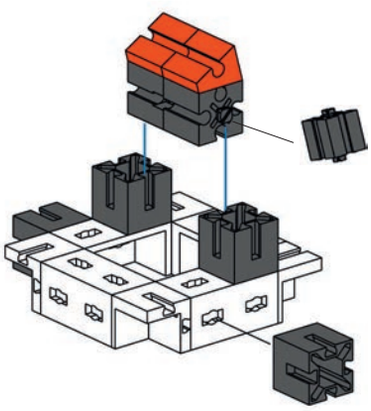

2

1 x

1 x

4 x

2 x

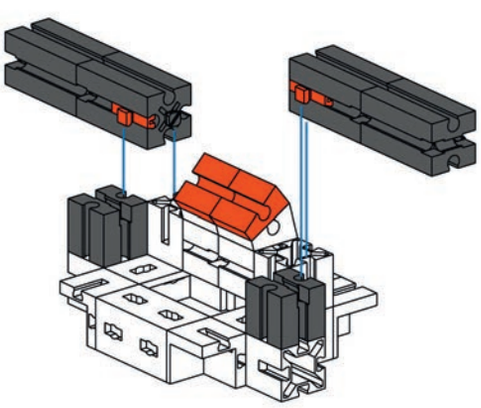

3

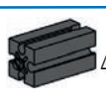
4 x

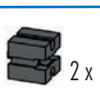
2 x

2 x

2 x

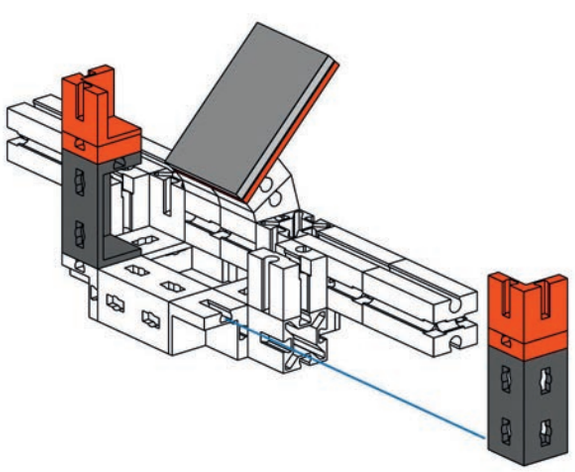

4

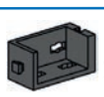
2 x

2 x

2 x

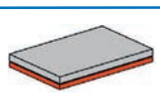
1 x

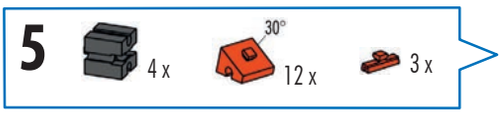
5
4 x
30°
12 x
3 x

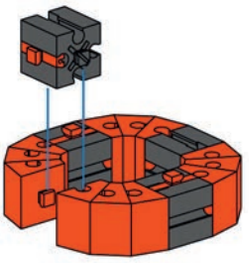

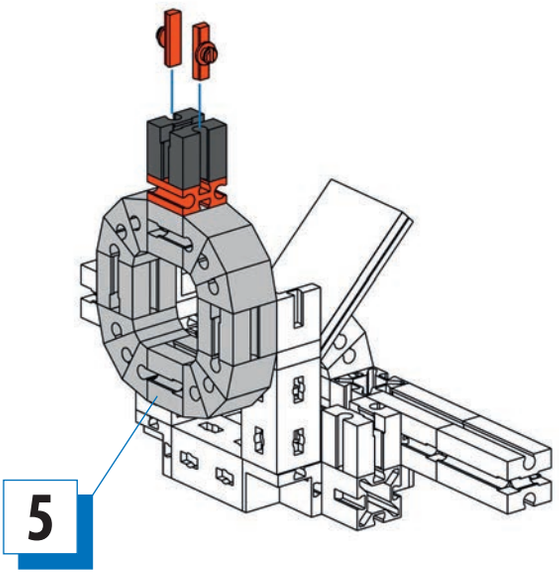
5

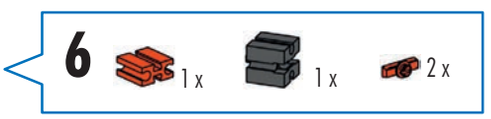
6
1 x
1 x
2 x

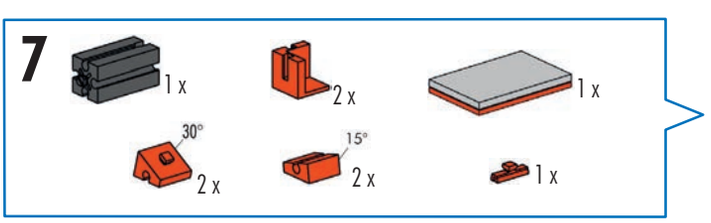
7
1 x
2 x
1 x
30°
2 x
15°
2 x
1 x

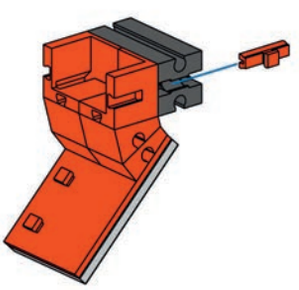

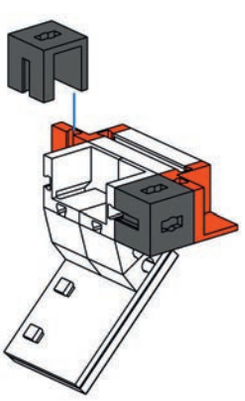

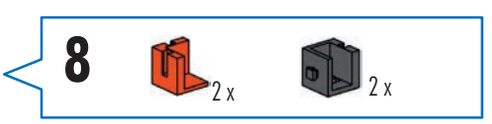
8
2 x
2 x

8

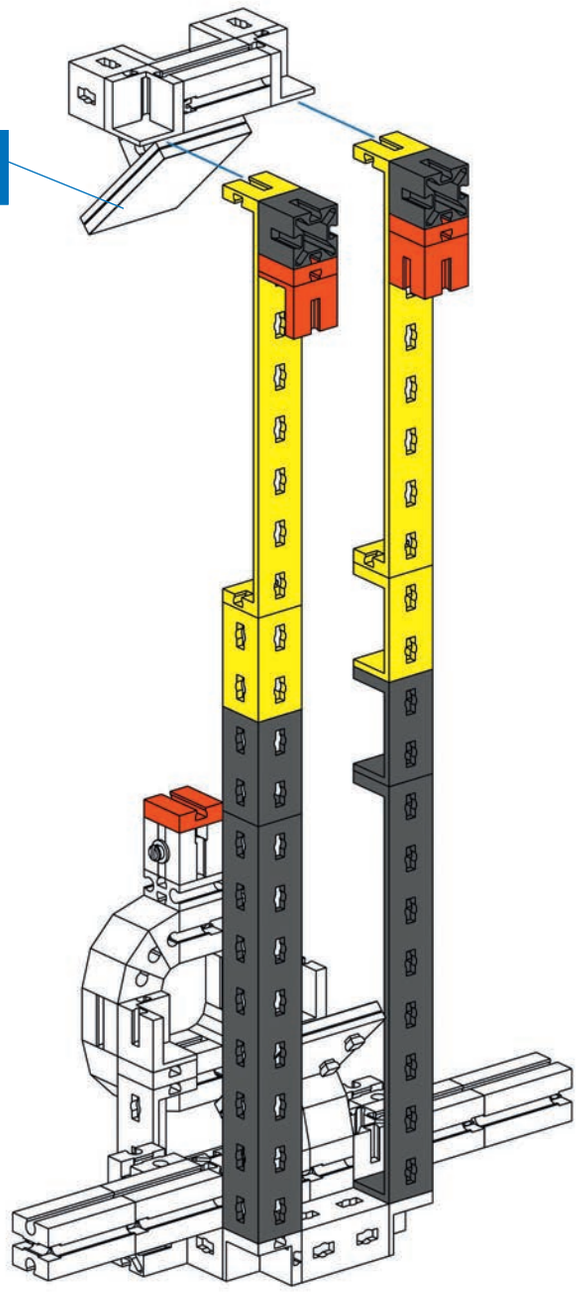

9

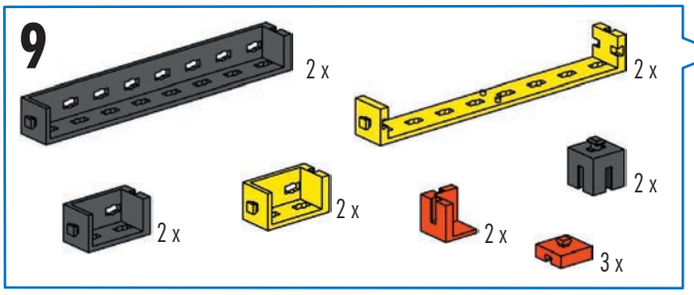

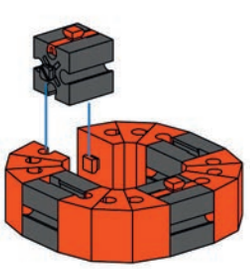

10

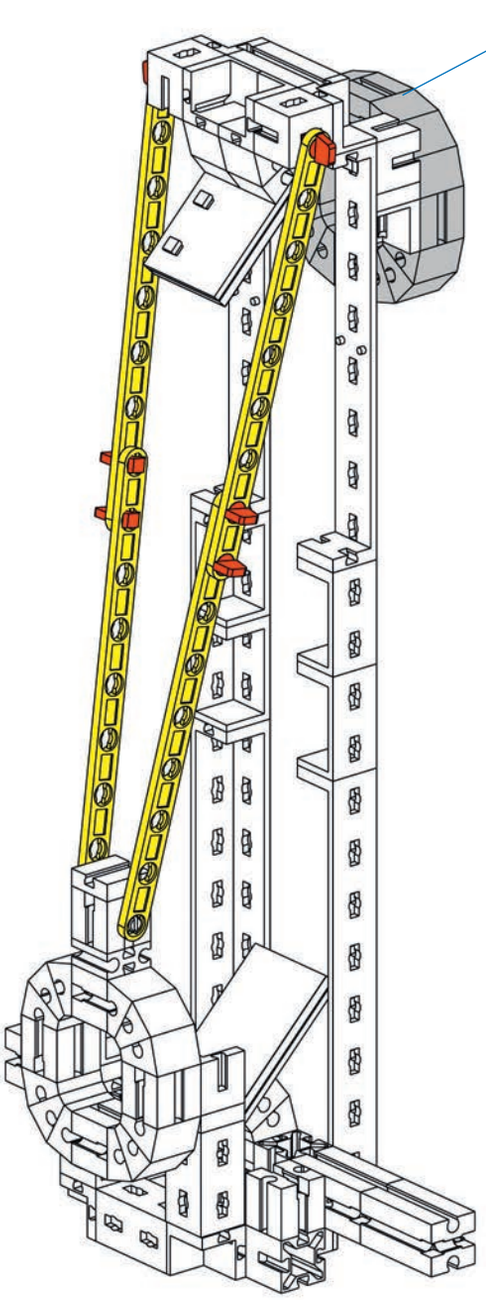
10

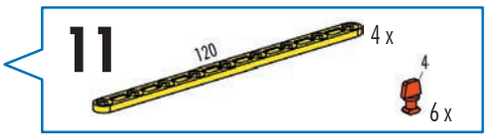
11
120
4 x
4
6 x

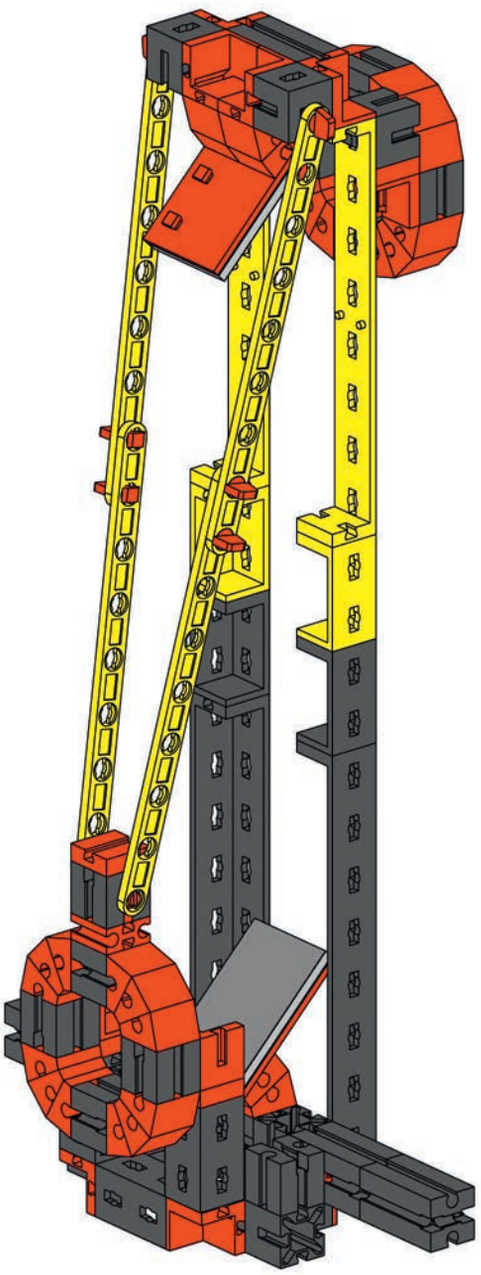

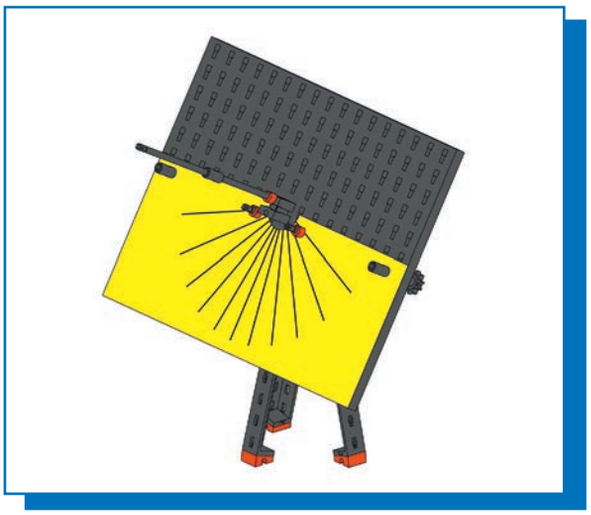

Sonnenuhr
Sun dial
Cadran solaire
Zonnewijzer
Reloj de sol
Relógio de sol
Meridiana
Солнечные часы
日规

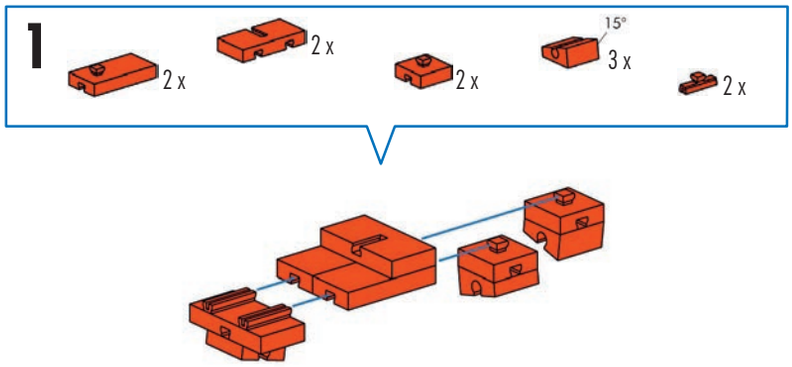

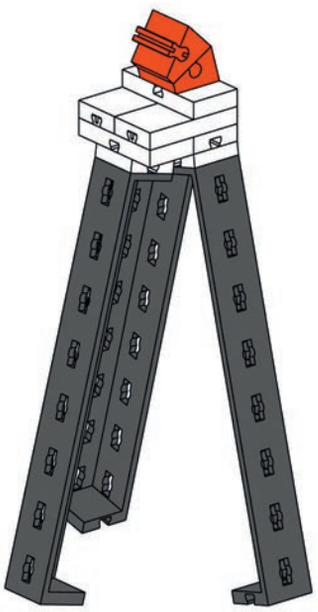

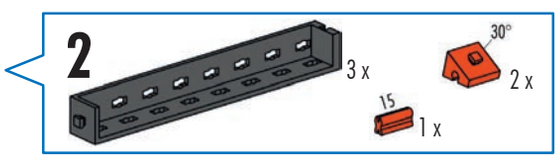

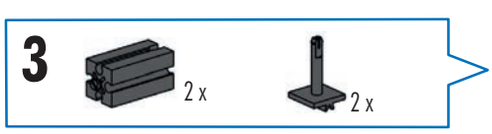

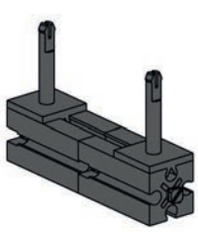

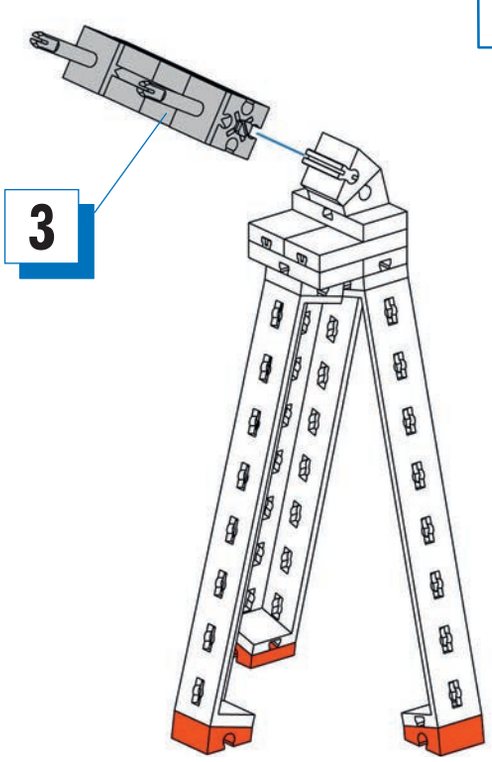

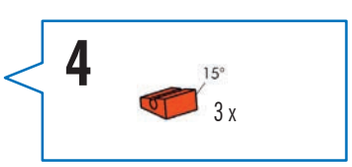

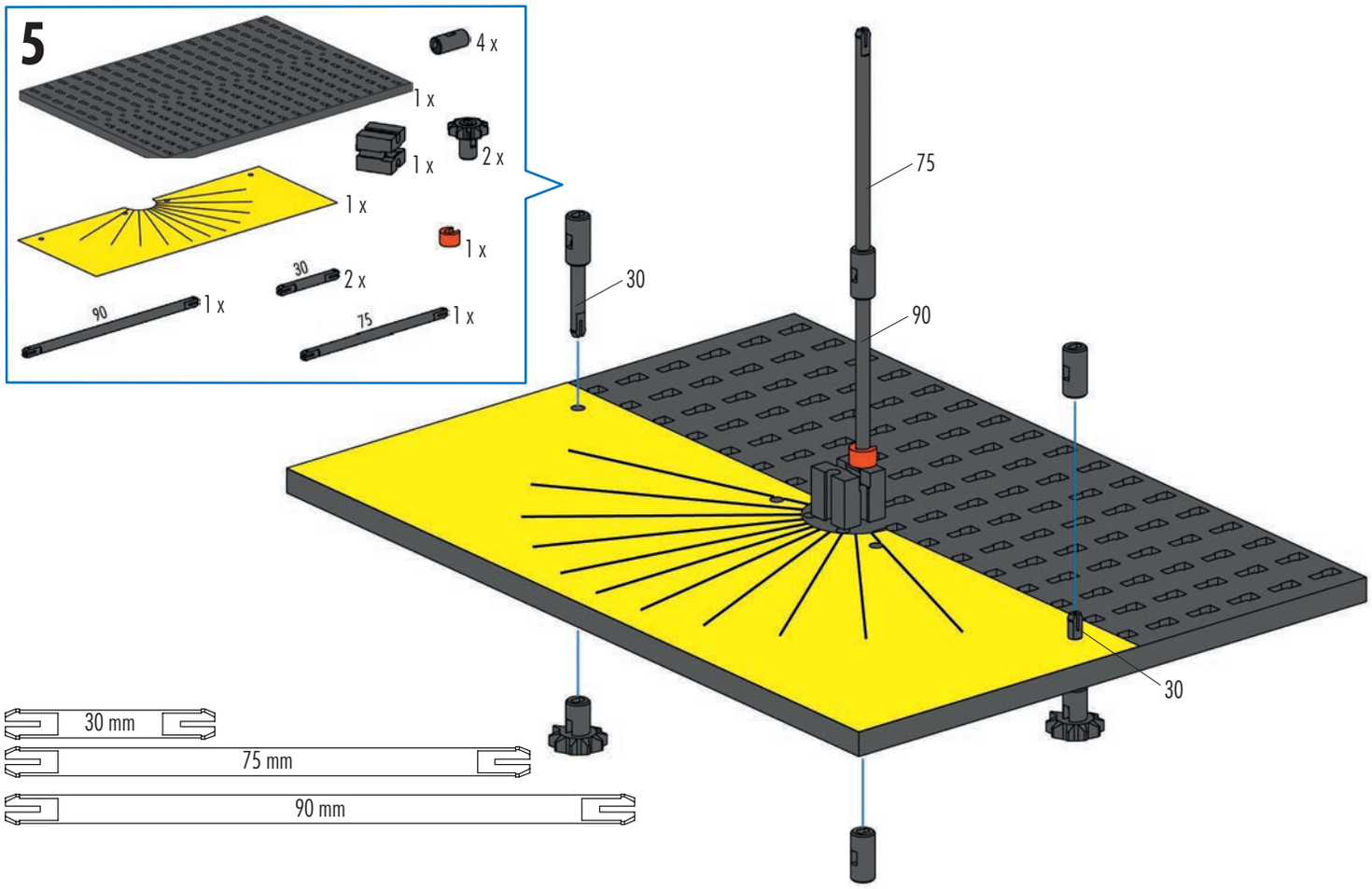

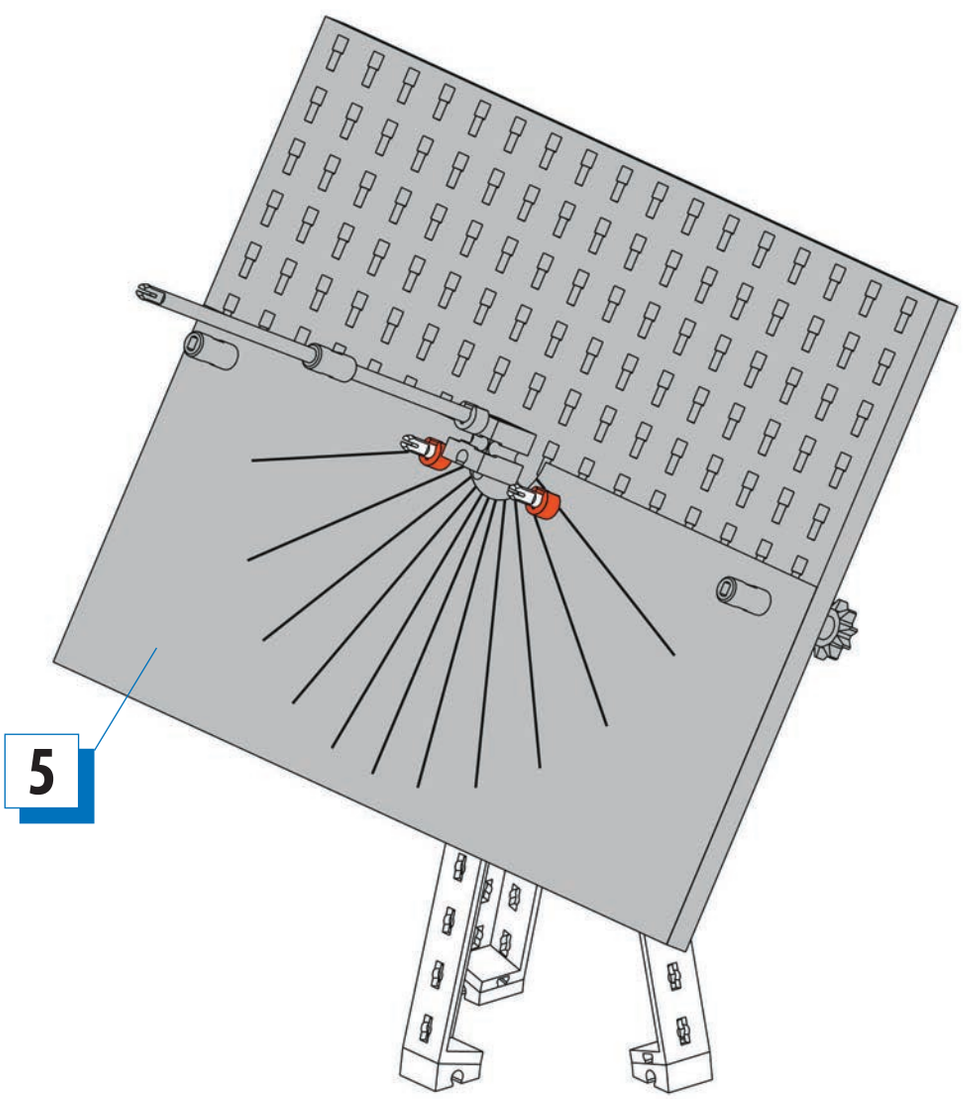

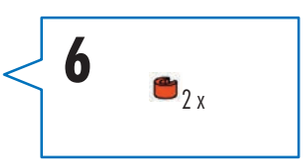

856

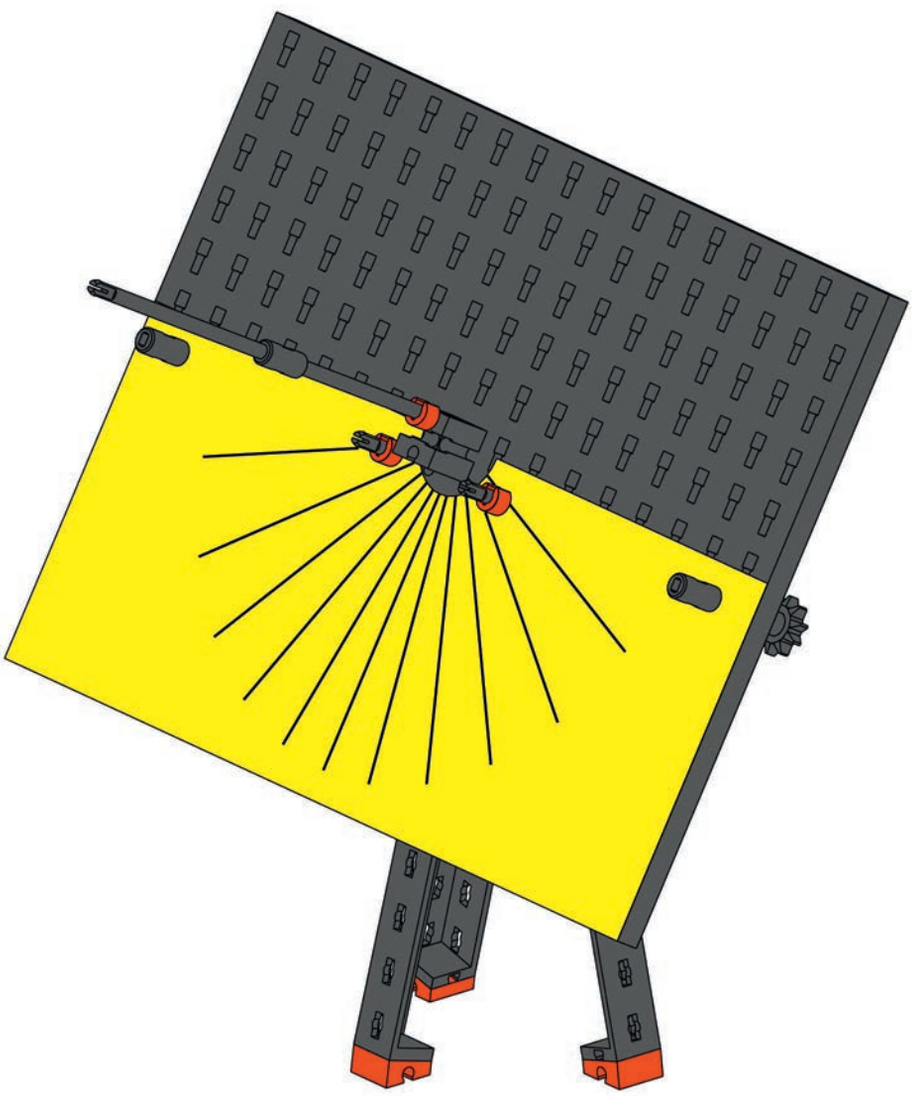

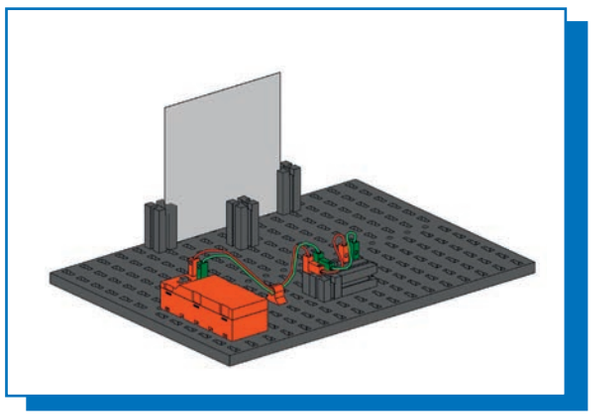

Halb- und Kernschatten
Partial and full shade
Ombre pure et pénombre
Half- en kernschaduw
Semisombra y sombra absoluta
Penumbra e umbra
Ombra e penombra
Полутени и полные тени
半影和本影

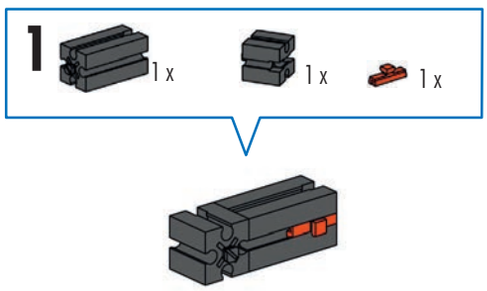

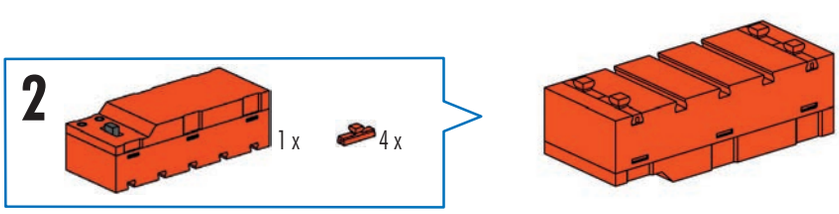

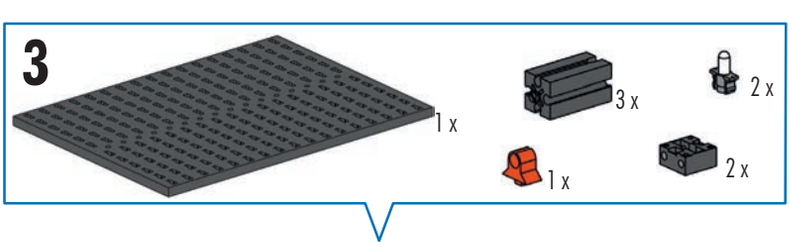

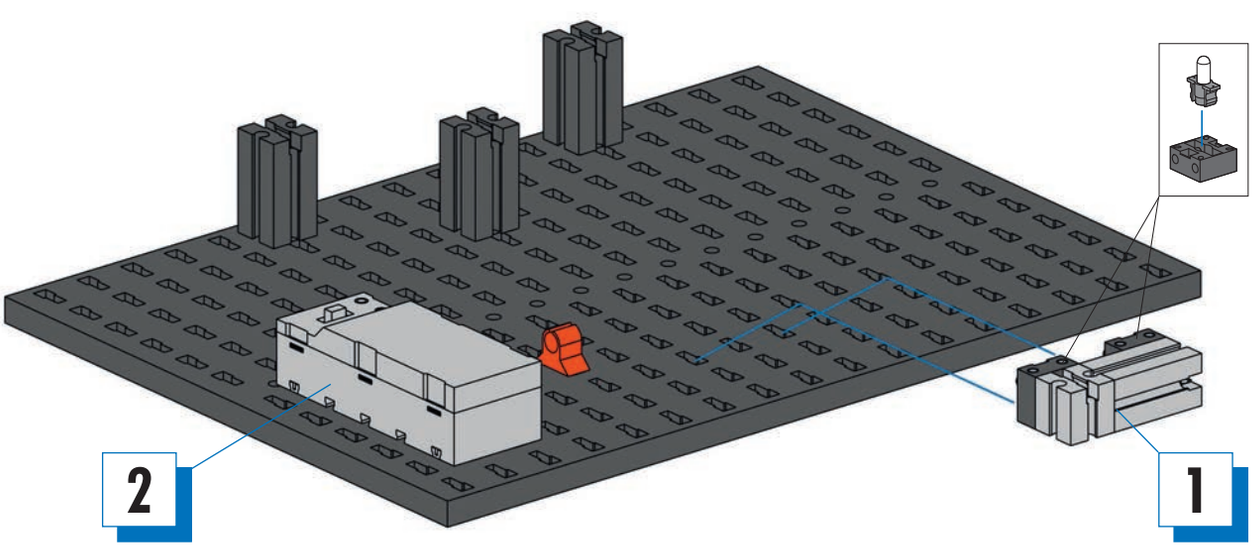

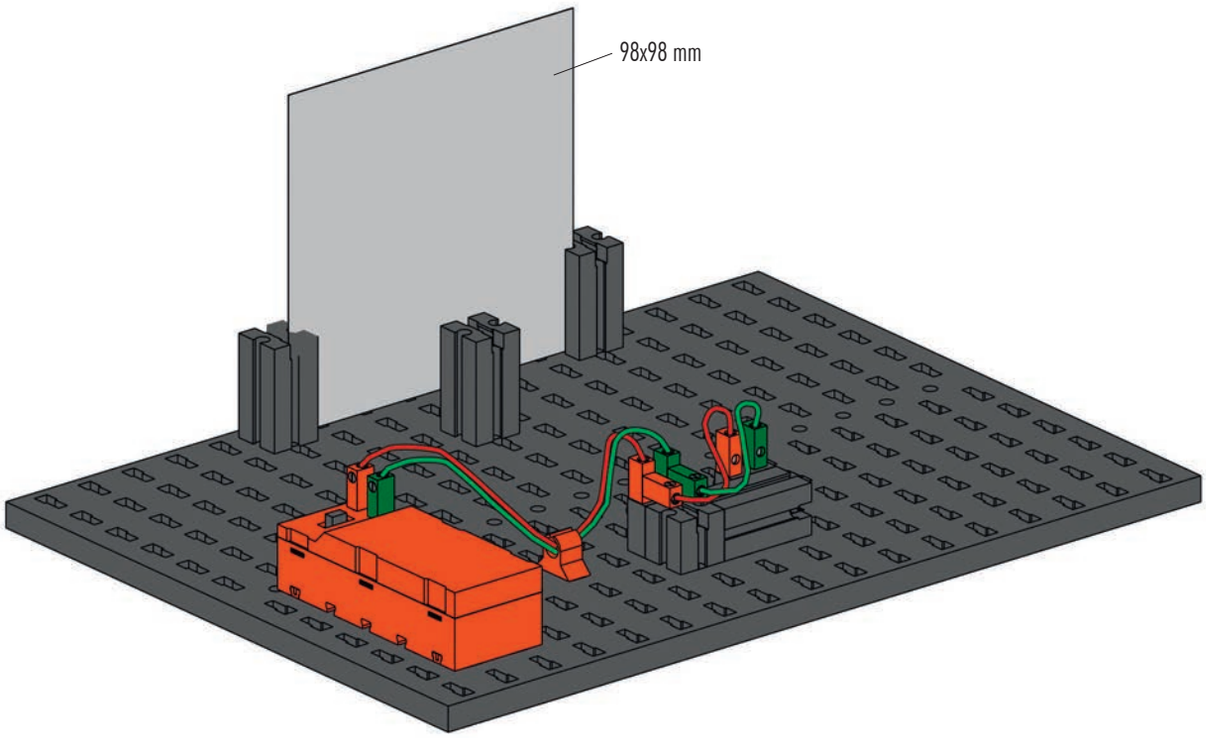

Schaltplan
Circuit diagram
Plan électrique

Schakelschema
Diagrama de circuitos
Plano elétrico de ligação

Schema elettrico
Схема подключения
电路图

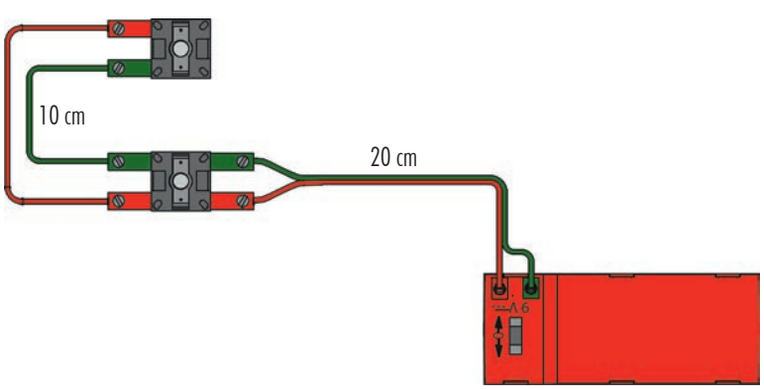

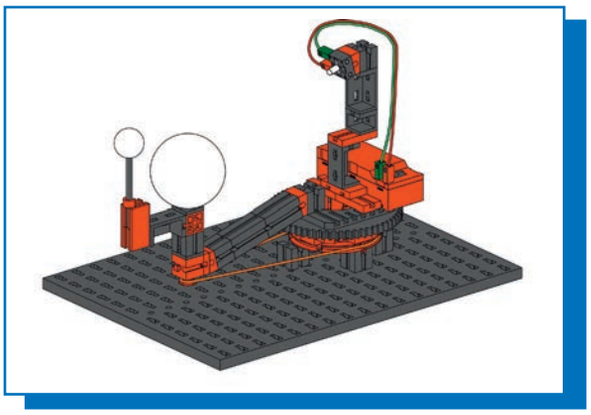

Planetenmodell **Model van planeten** **Modello planetario**
Planetary model **Modelo de planetas** Модель планет
Modèle planétaire **Modelo planetário** 行星模型

1

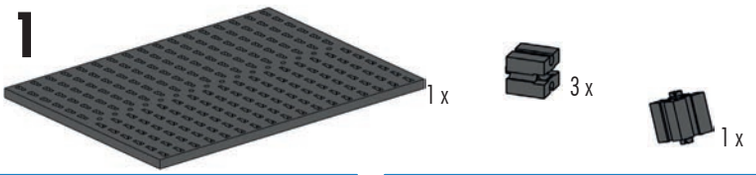

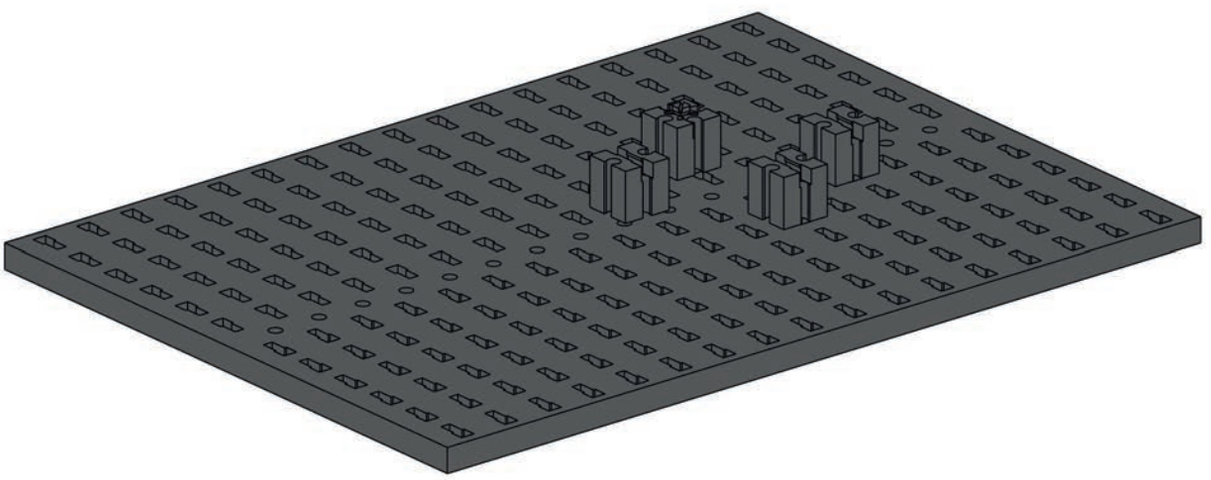

2

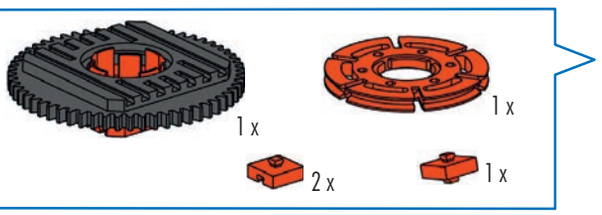

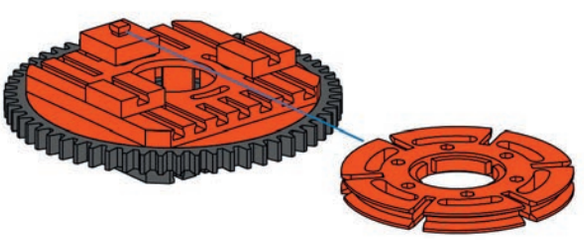

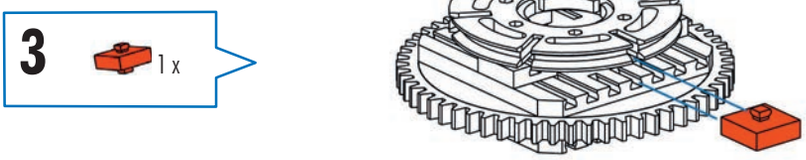
3
1 x

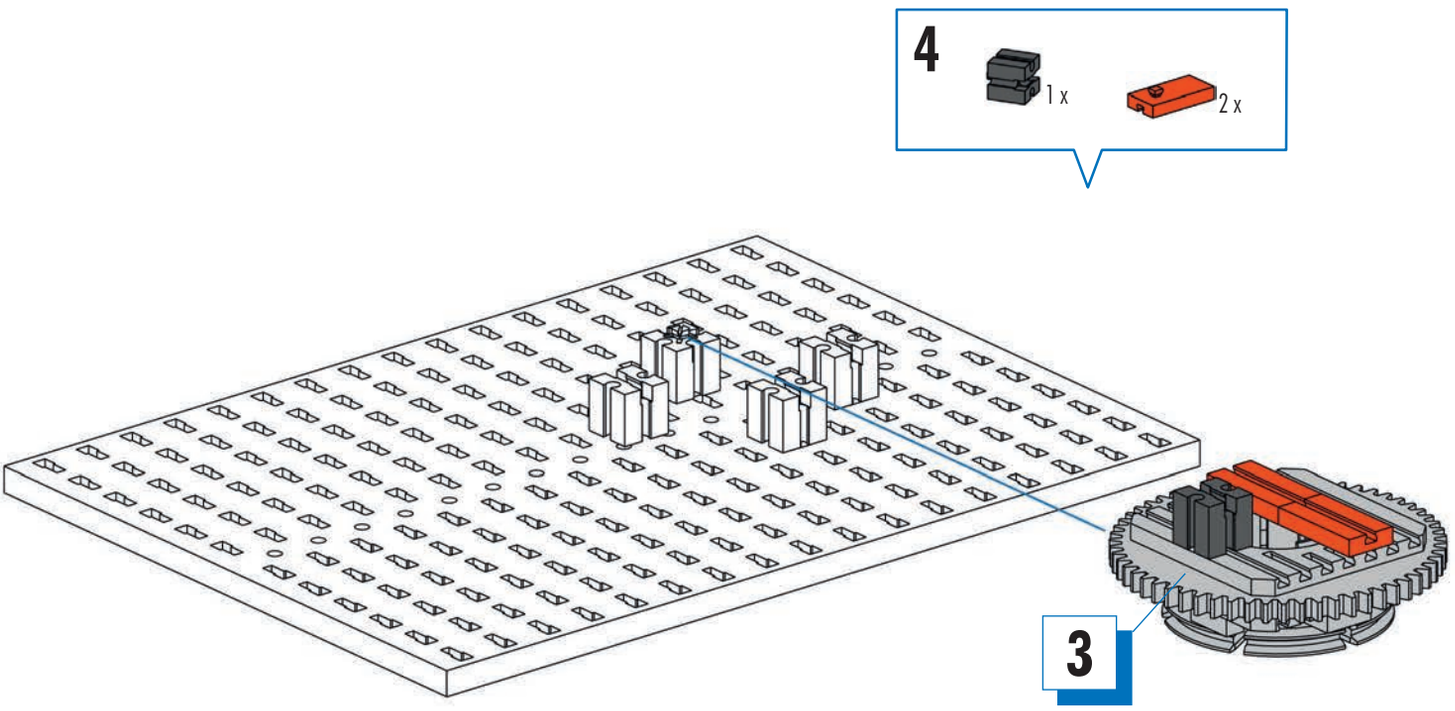
4
1 x
2 x
3

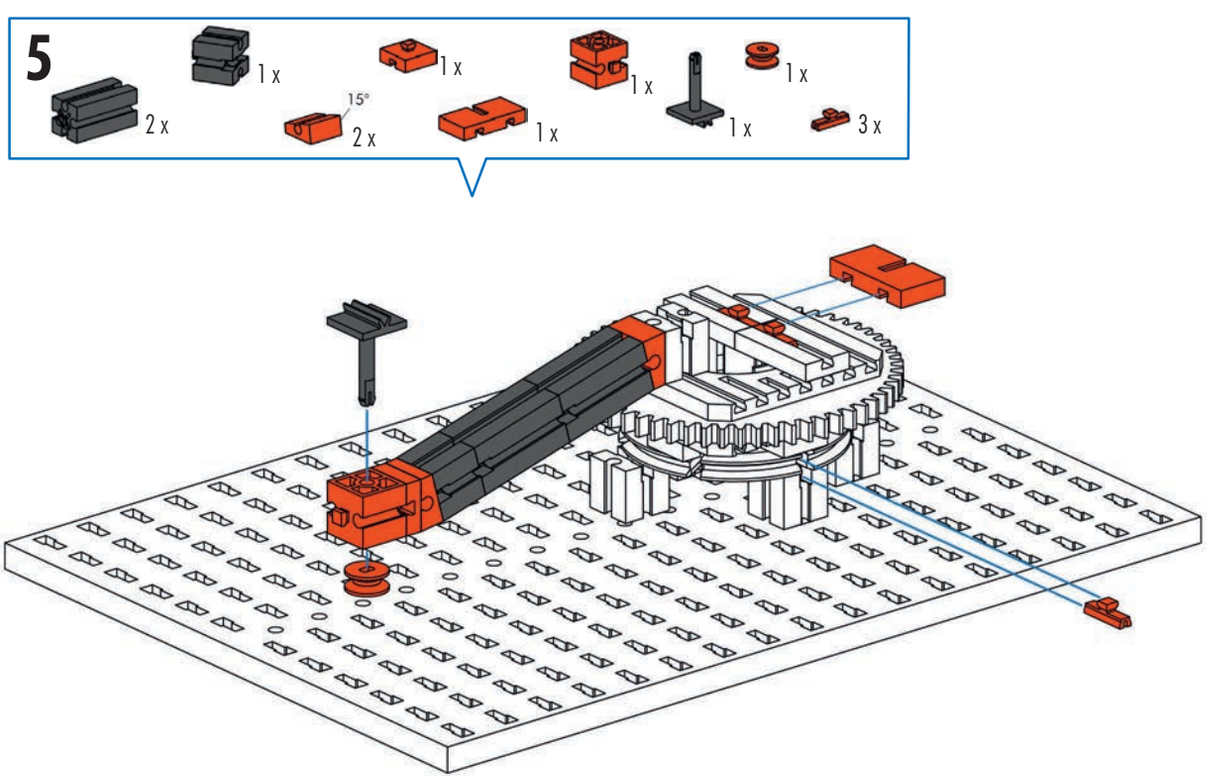
5
2 x
1 x
1 x
15°
2 x
1 x
1 x
1 x
1 x
3 x

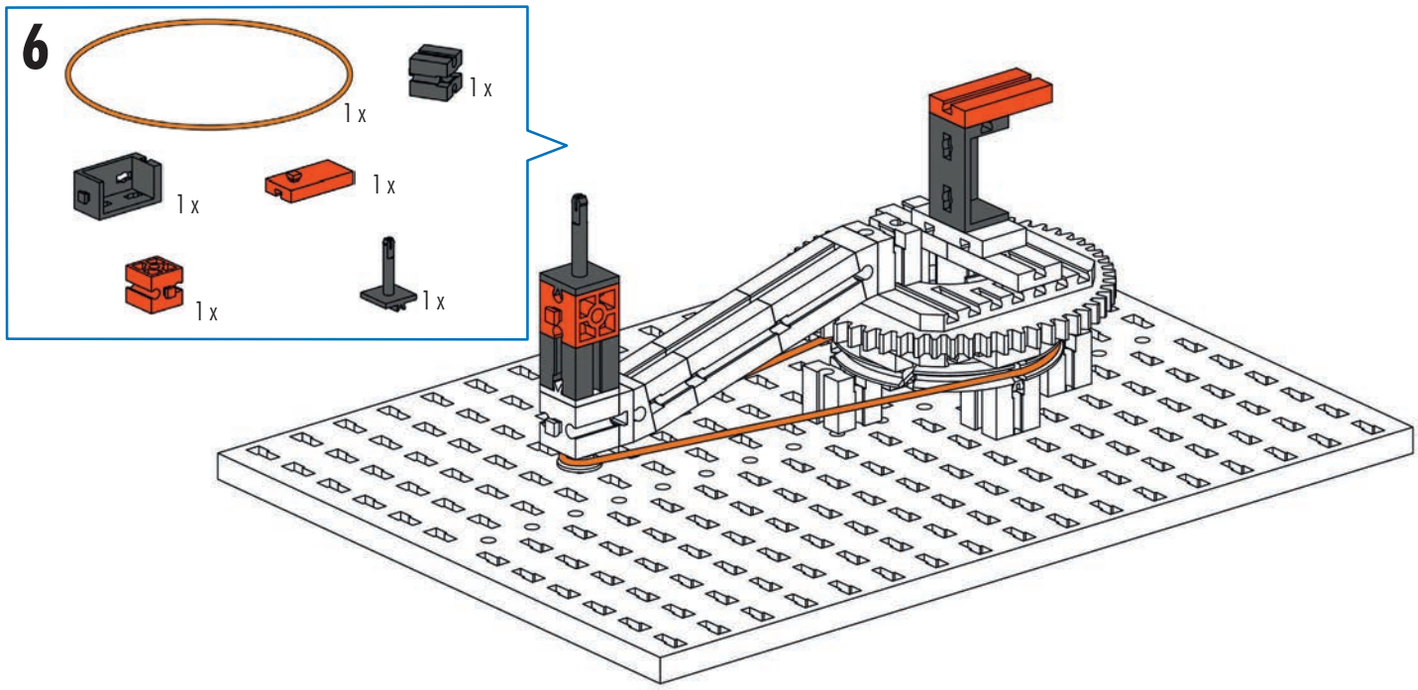

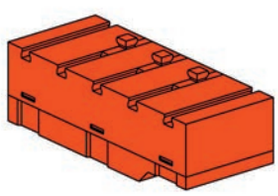

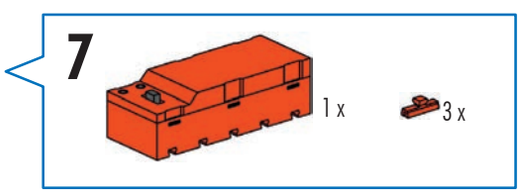

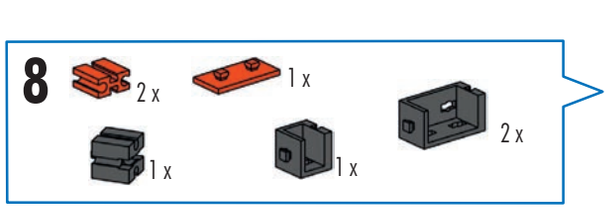

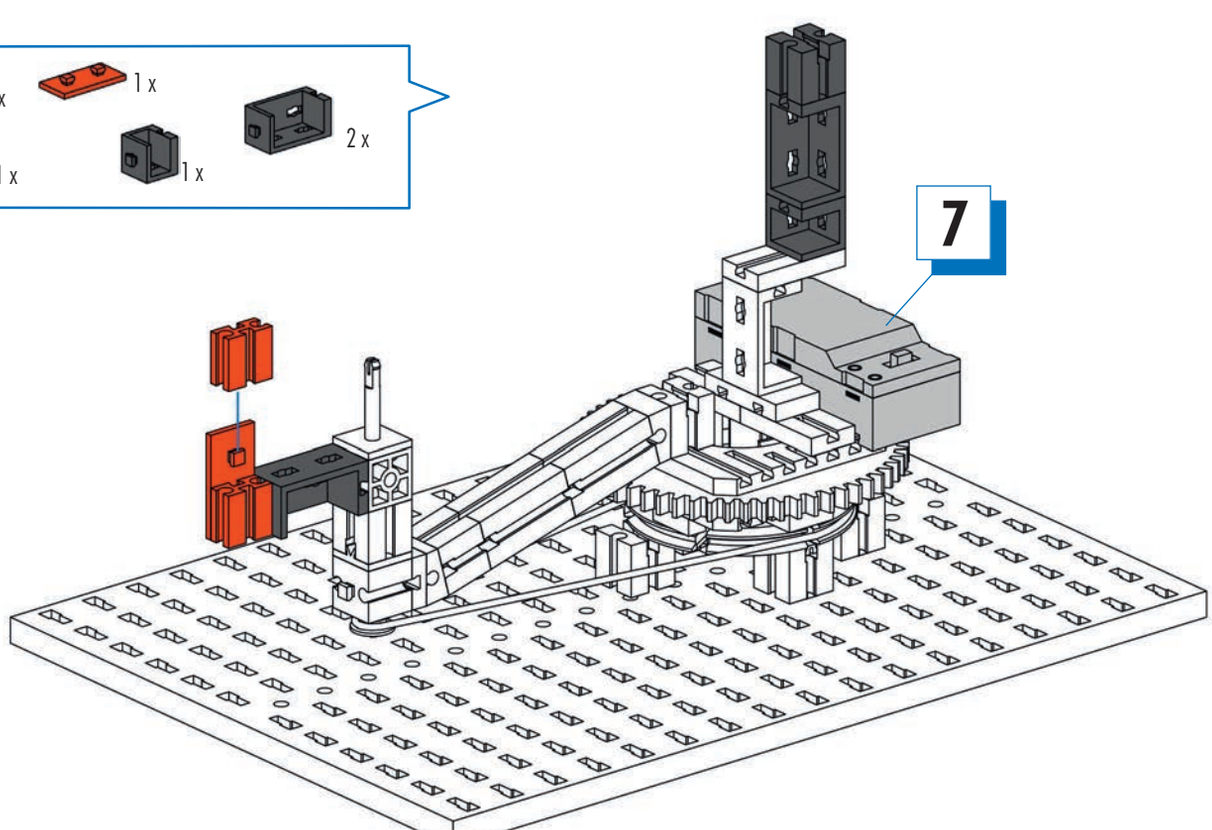

862

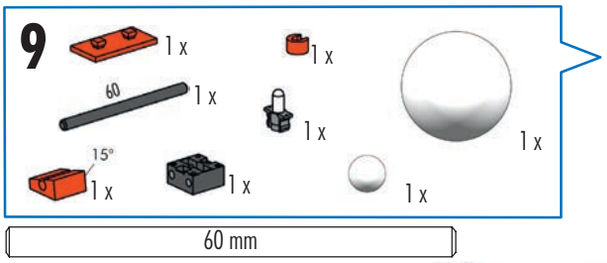

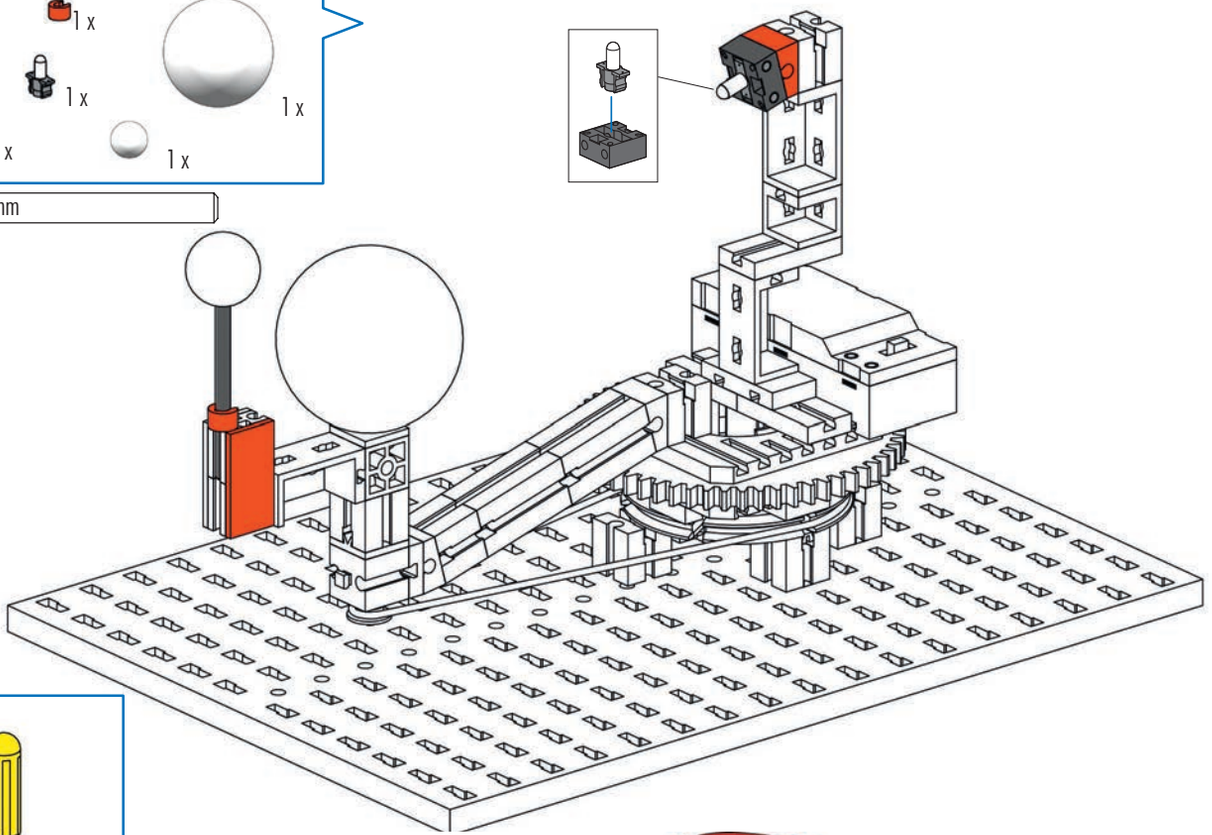

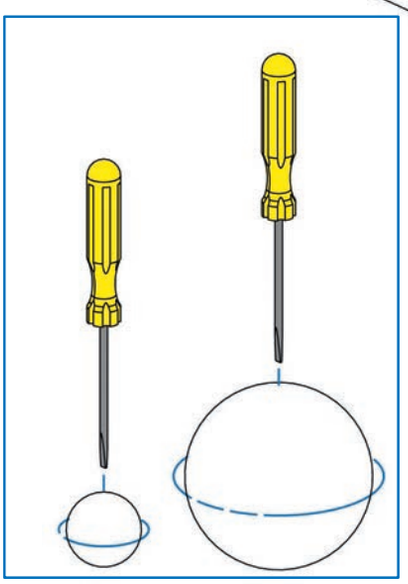

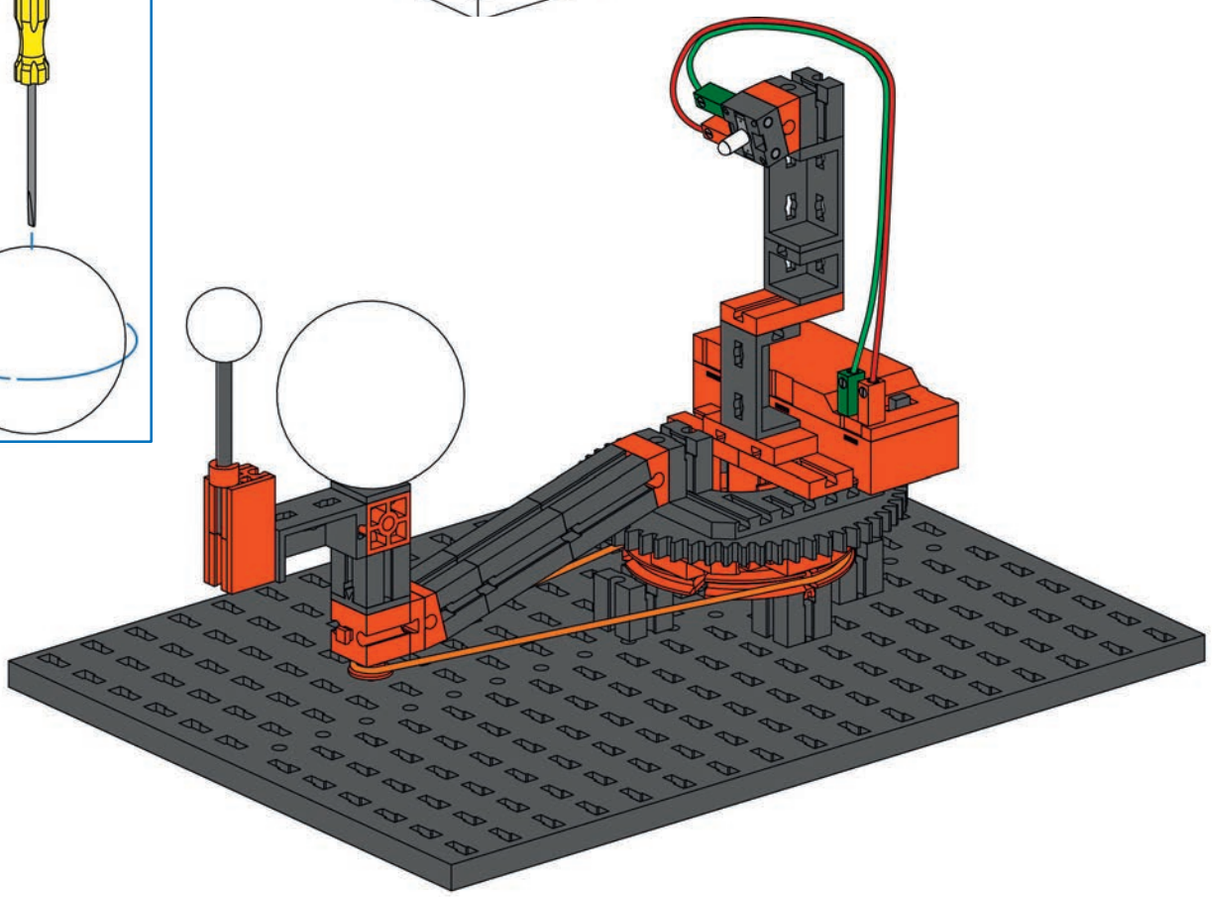

Schaltplan
Circuit diagram
Plan électrique

Schakelschema
Diagrama de circuitos
Plano elétrico de ligação

Schema elettrico
Схема подключения
电路图

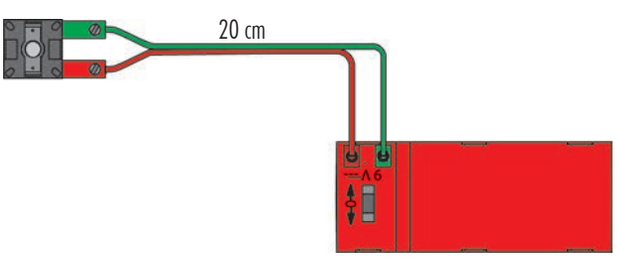

863

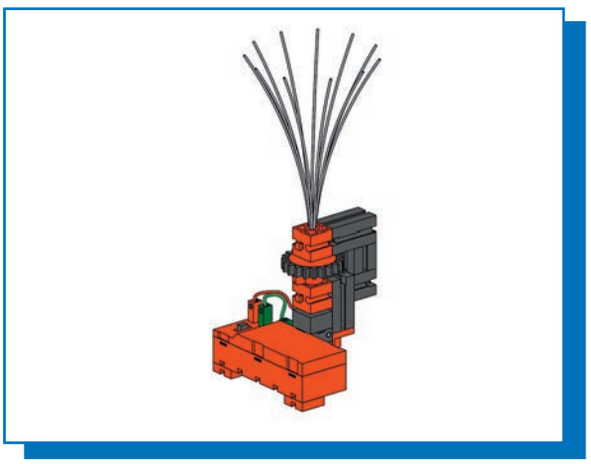

Lichtspiel
Light effects
Jeu de lumière
Lichtspel
Juego de luces
Jogo de luz
Gioco di luci
Игра света
光表演

1

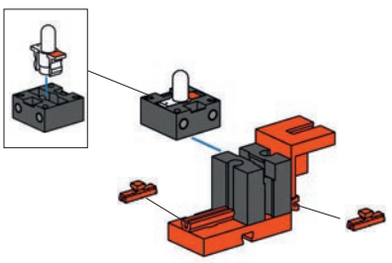

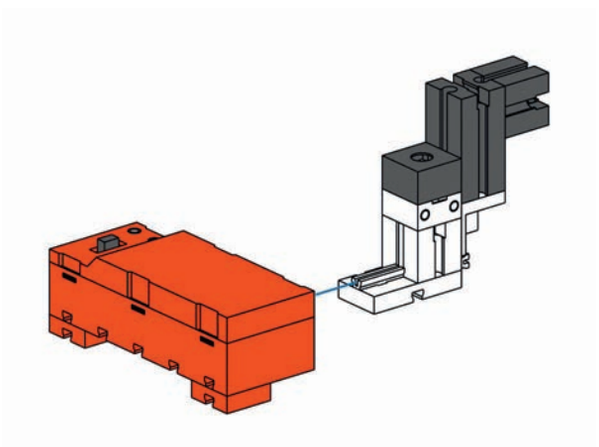

2

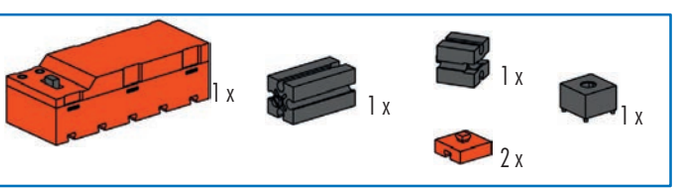

3

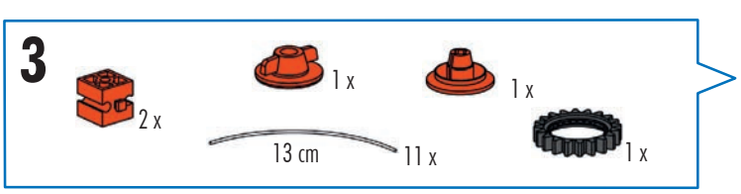

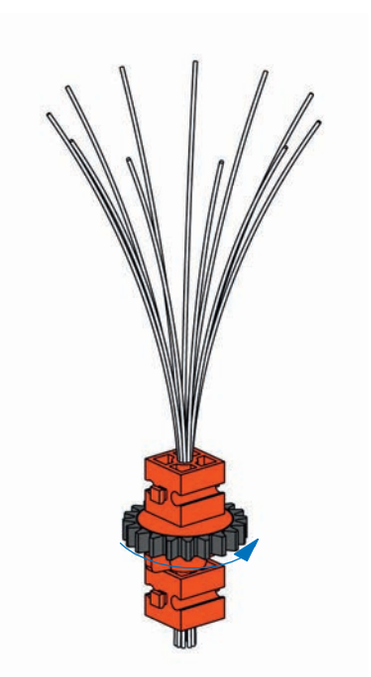

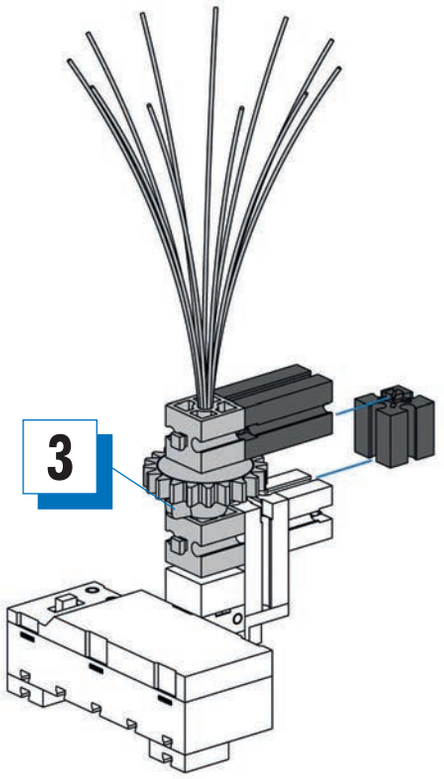

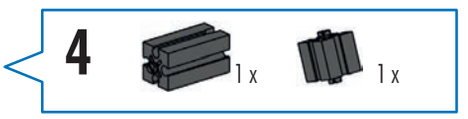

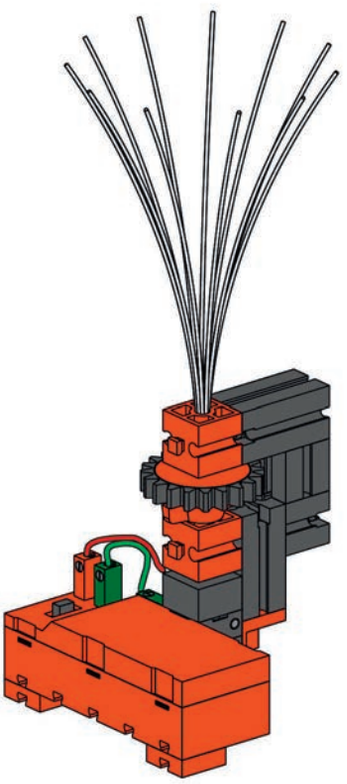

Schaltplan
Circuit diagram
Plan électrique

Schakelschema
Diagrama de circuitos
Plano elétrico de ligação

Schema elettrico
Схема подключения
电路图

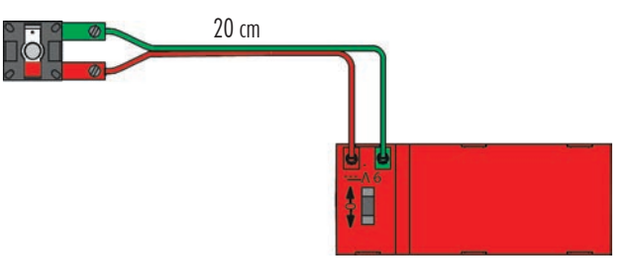

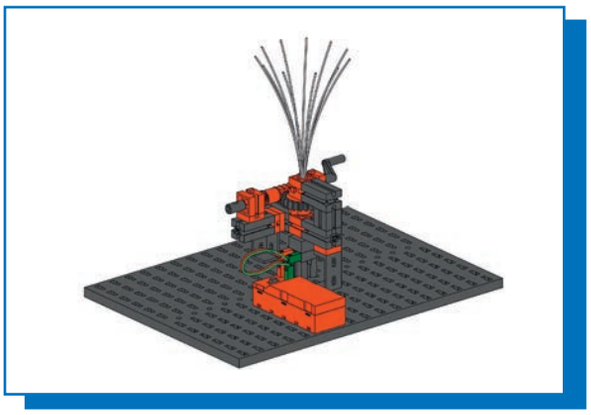

Lichtspiel mit Kurbel
Light effects with crank
Jeu de lumière à manivelle
Lichtspel met slinger
Juego de luces con manivela
Gioco di luci con manovella
Игра света с рукояткой
Jogo de luz com manivela
用手摇柄进行光表演

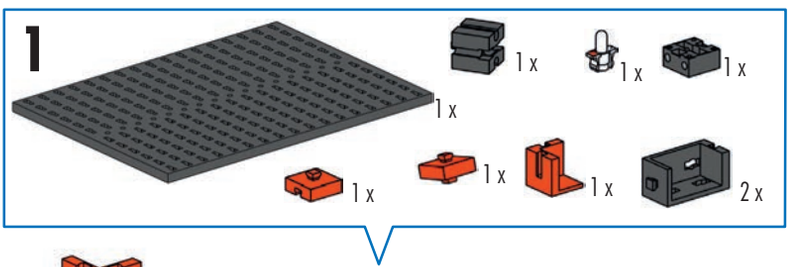

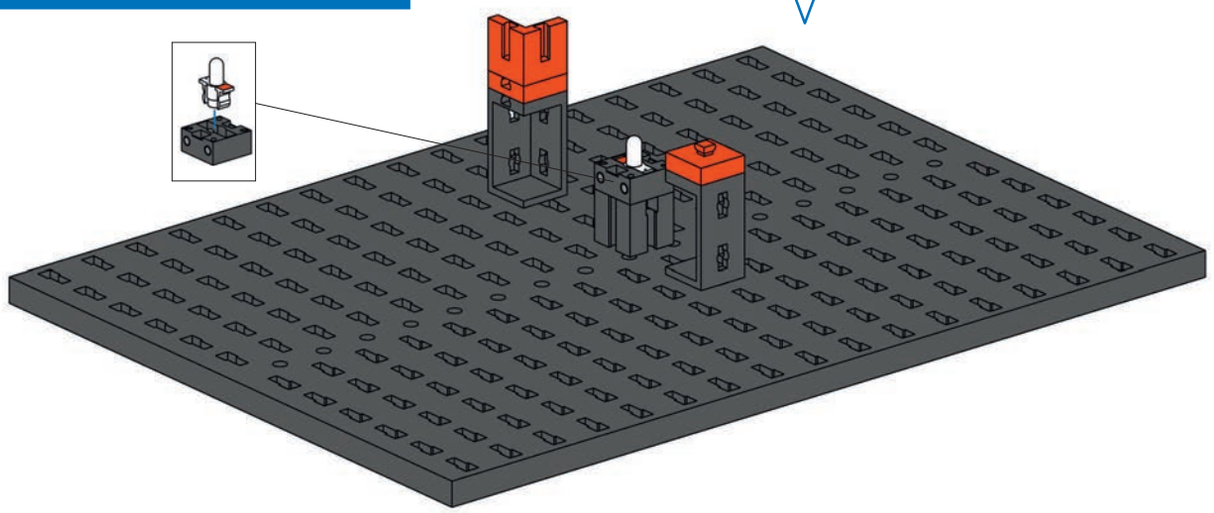

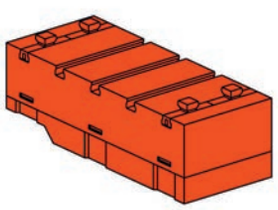

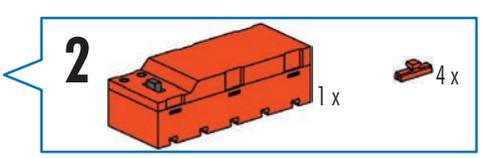

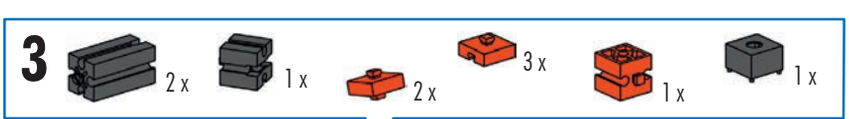

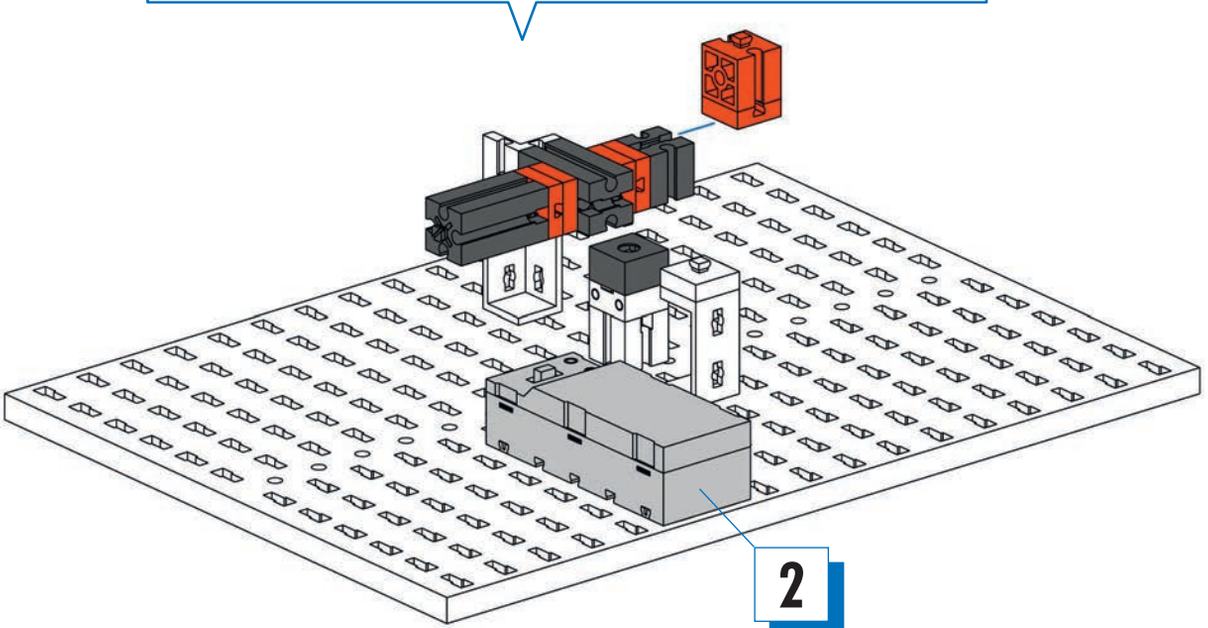

866

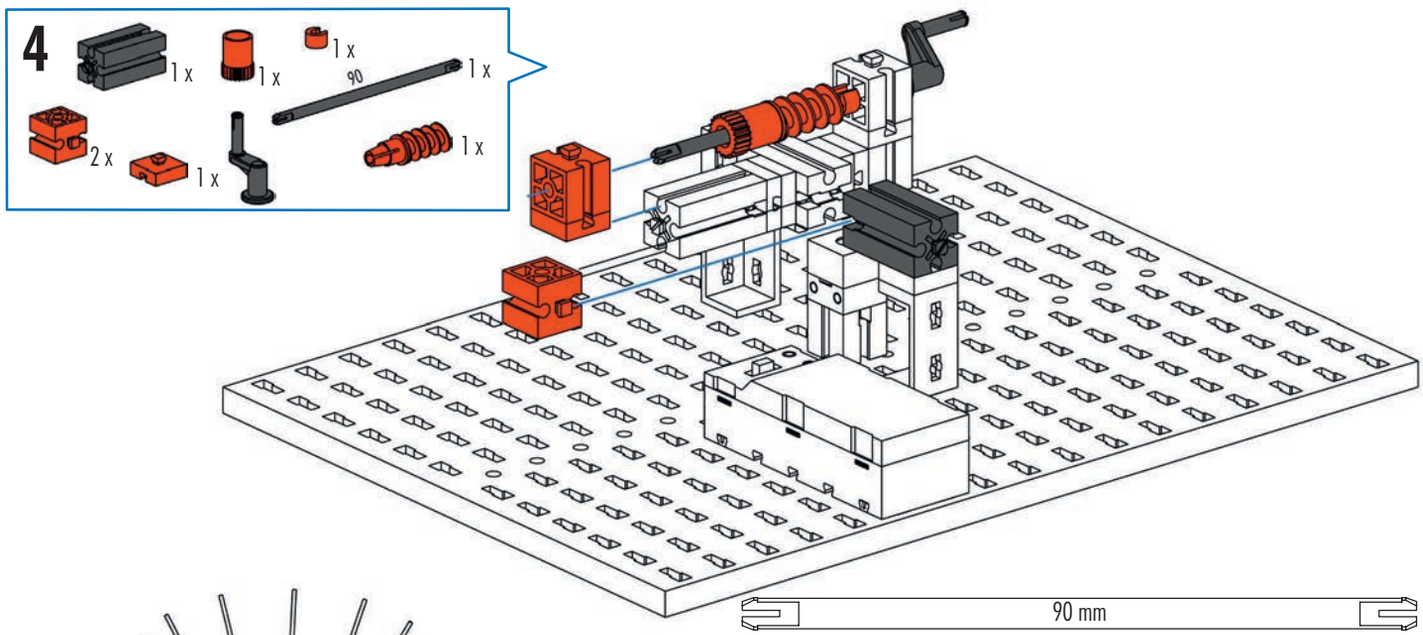

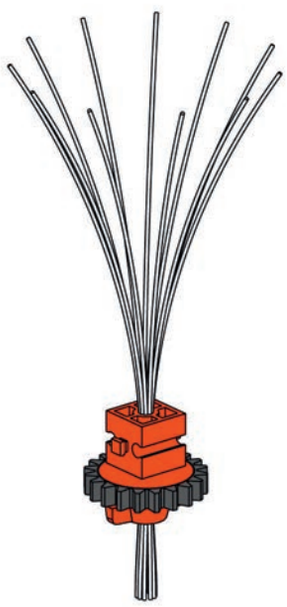

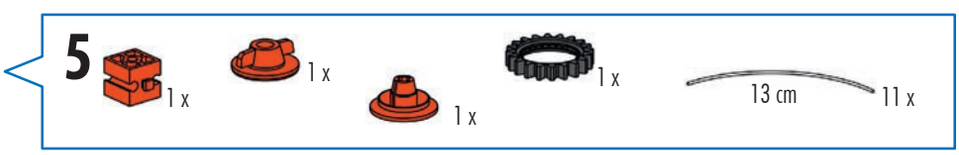

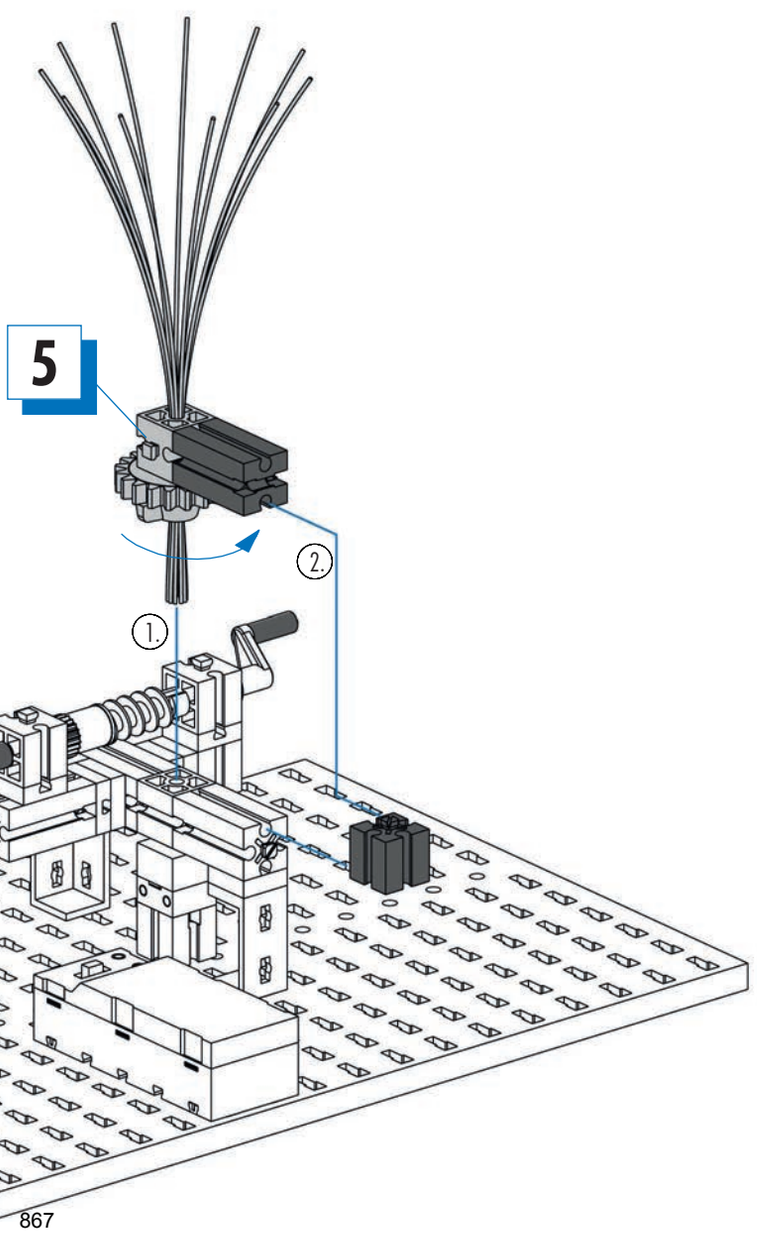

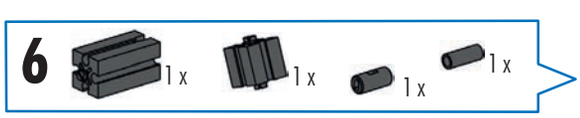

867

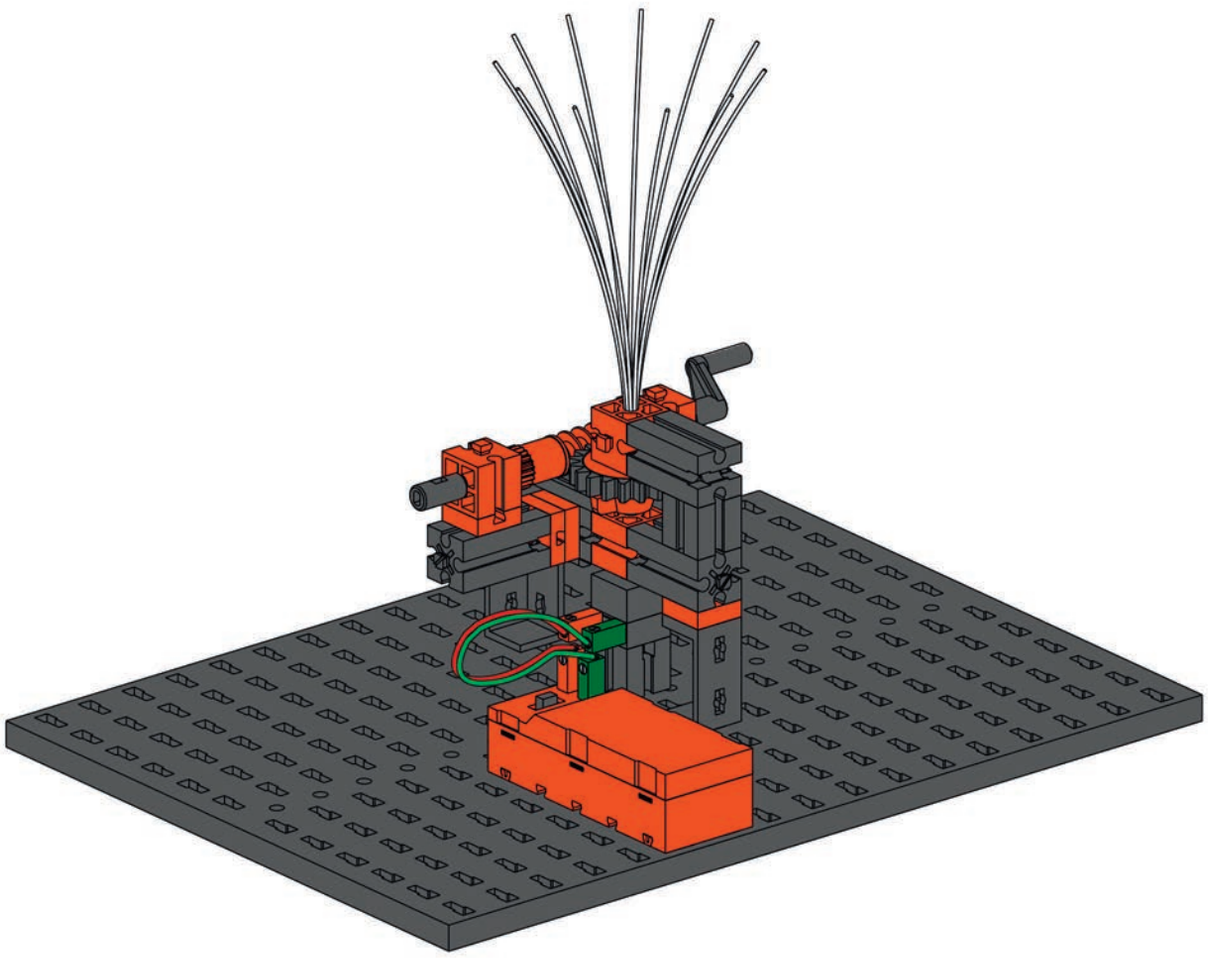

Schaltplan
Circuit diagram
Plan électrique

Schakelschema
Diagrama de circuitos
Plano elétrico de ligação

Schema elettrico
Схема подключения
电路图

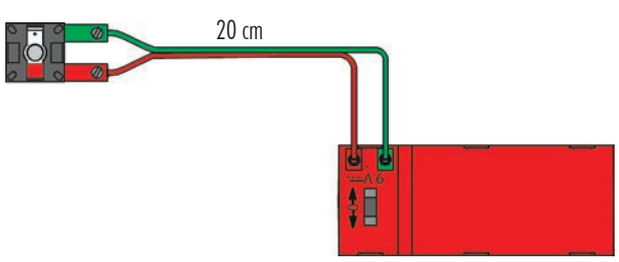

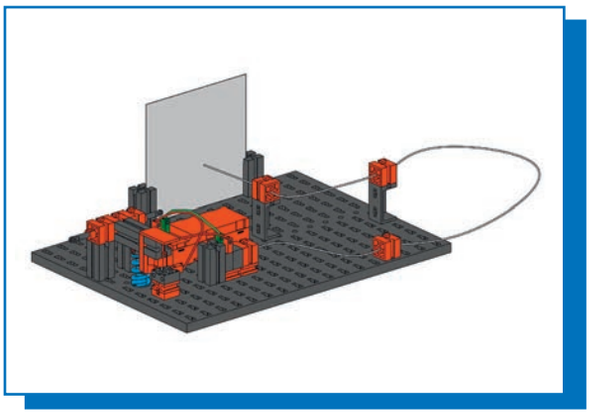

Optischer Morseapparat
Optical morse telegraph
Manipulateur de morse à fonctionnement optique
Optisch morseapparaat
Telégrafo Morse óptico
Aparelho Morse ótico
Apparecchio Morse ottico
Оптический аппарат Морзе
光的摩尔斯电报机

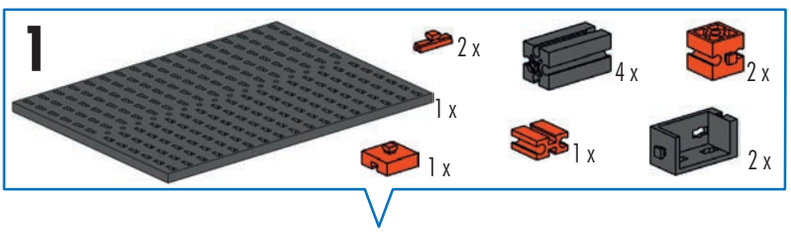

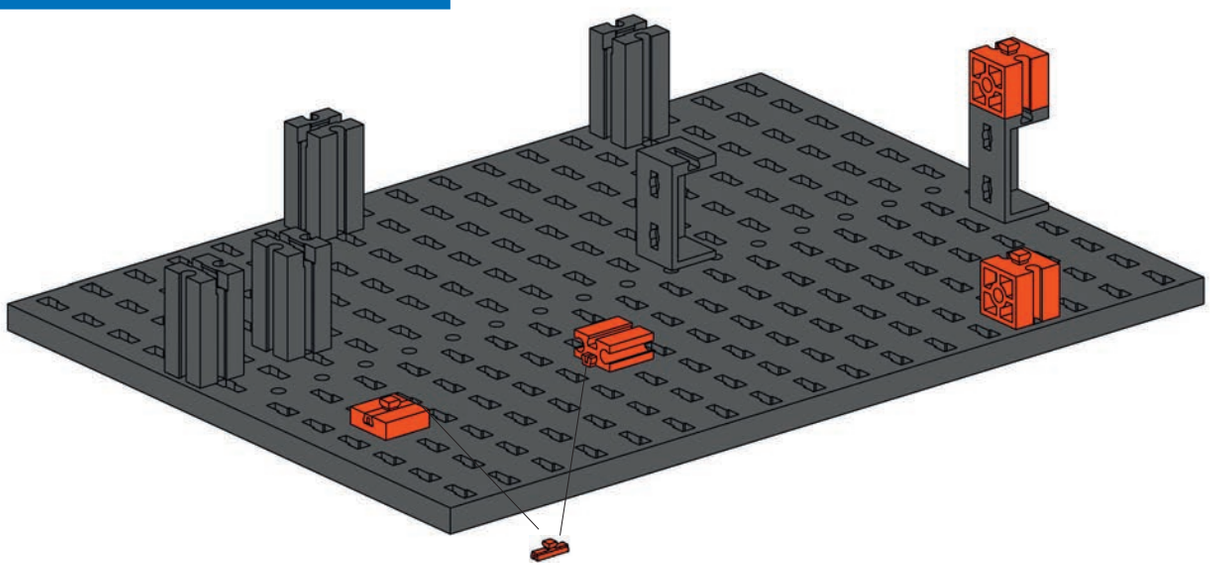

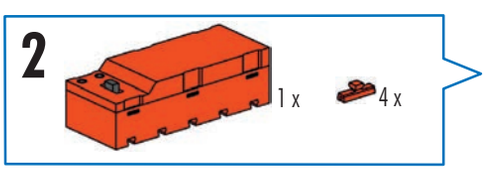

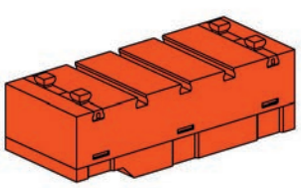

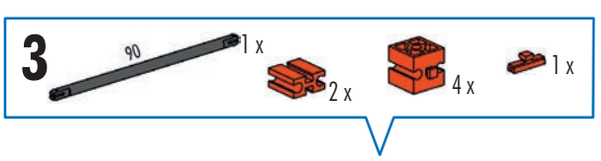

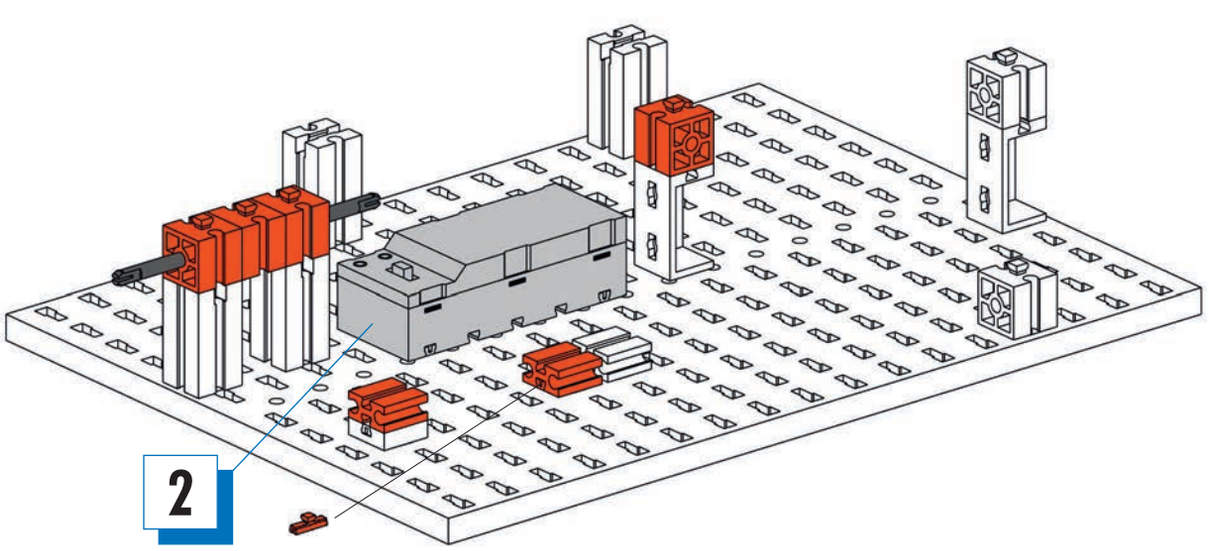

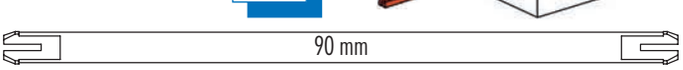

869

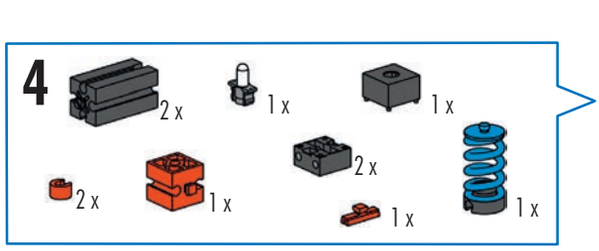
4
2 x
1 x
1 x
2 x
2 x
1 x
1 x
1 x

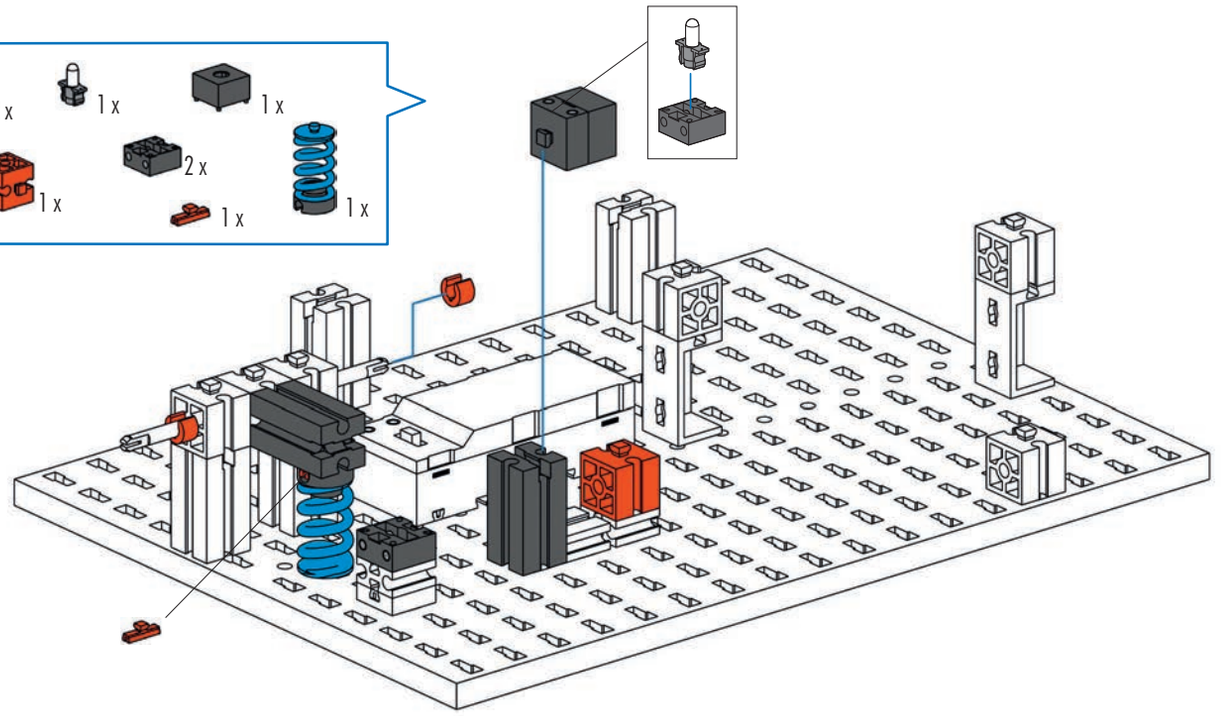

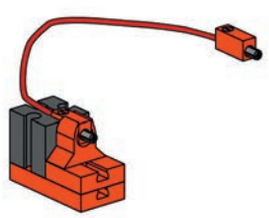

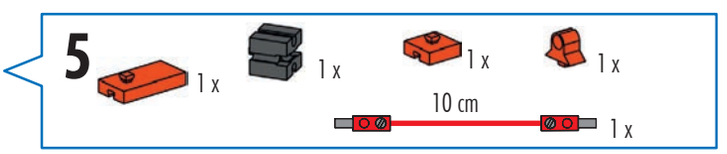
5
1 x
1 x
1 x
1 x
10 cm
1 x

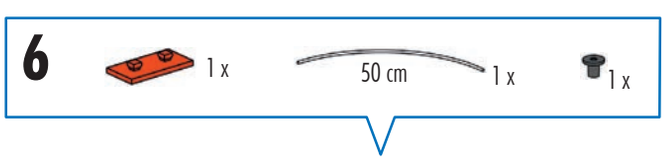
6
1 x
50 cm
1 x
1 x

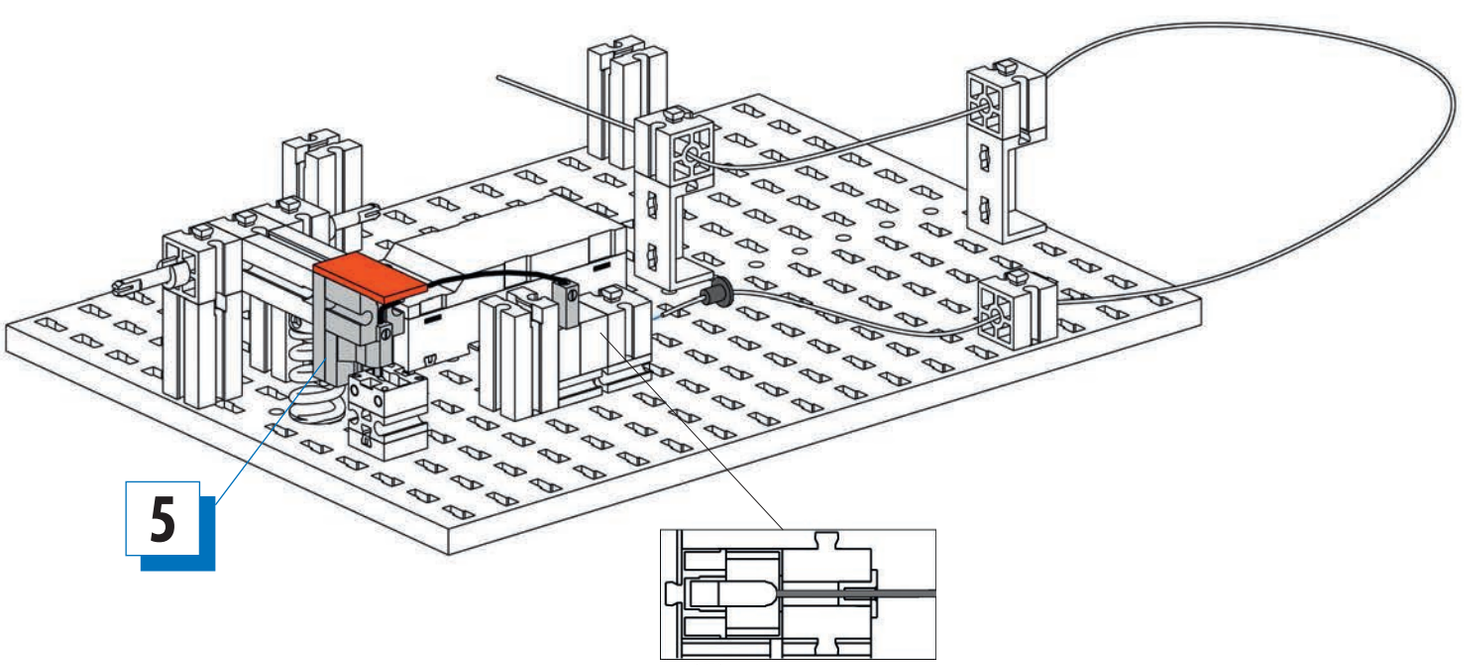
5
870

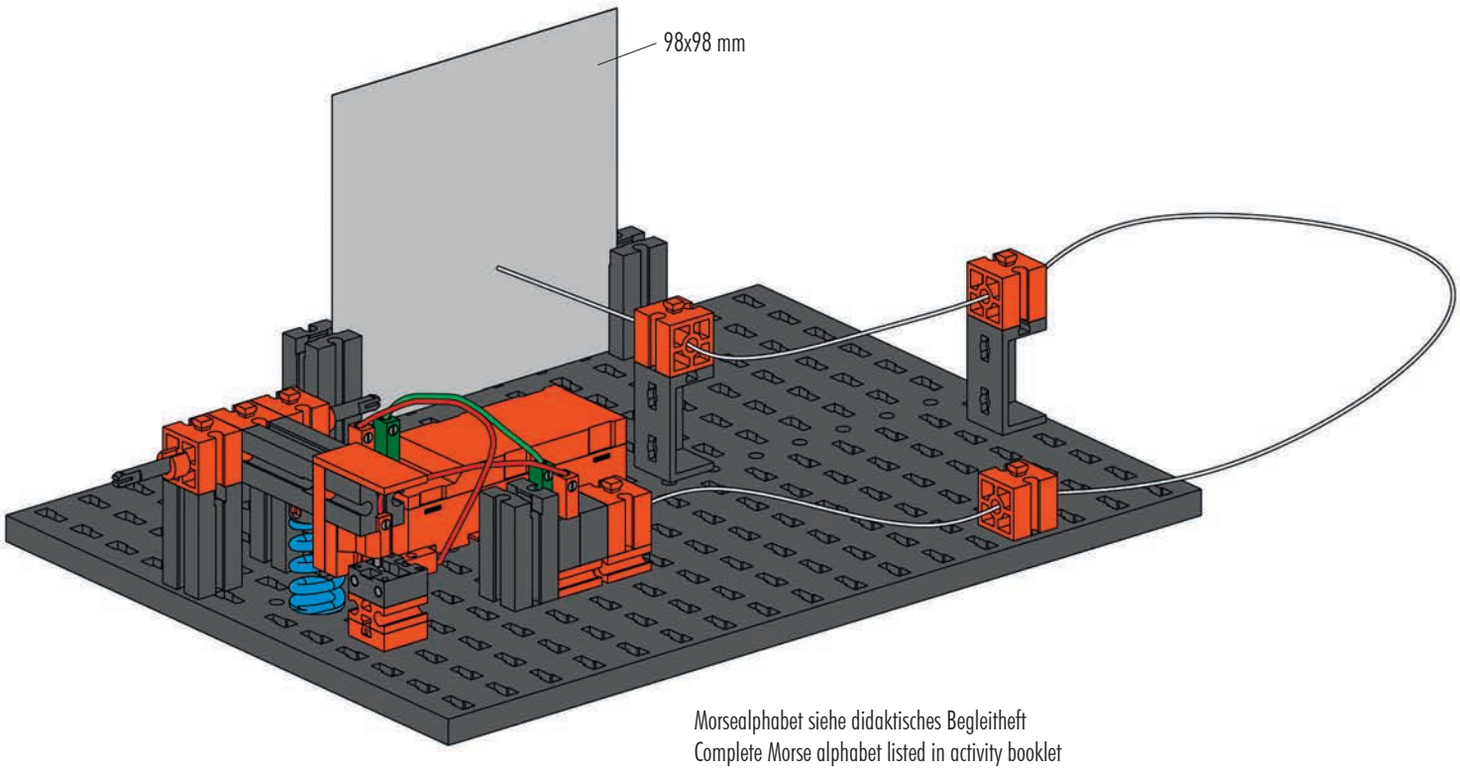

Morsealphabet siehe didaktisches Begleitheft
Complete Morse alphabet listed in activity booklet
Voir le manuel d'accompagnement en ce qui concerne l'alphabet morse
Zie het didactisch begeleidend boekje voor het morse-alfabet
Véase alfabeto Morse en el cuaderno didáctico adjunto
Alfabeto Morse ver folheto didático
Alfabeto Morse, vedi libretto didattico delle attività
Азбуку Морзе см. в обучающей сопроводительной брошюре
摩尔斯电码见随附的指导性说明书

Schaltplan
Circuit diagram
Plan électrique

Schakelschema
Diagrama de circuitos
Plano elétrico de ligação

Schema elettrico
Схема подключения
电路图

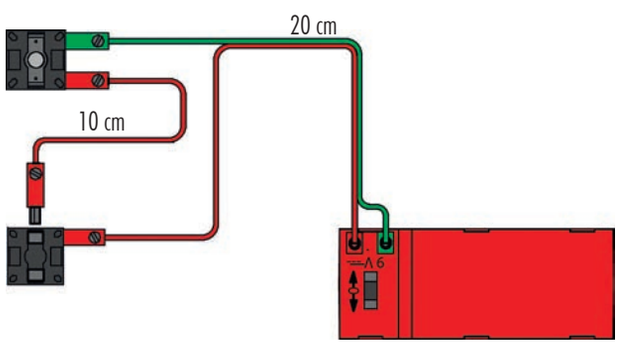

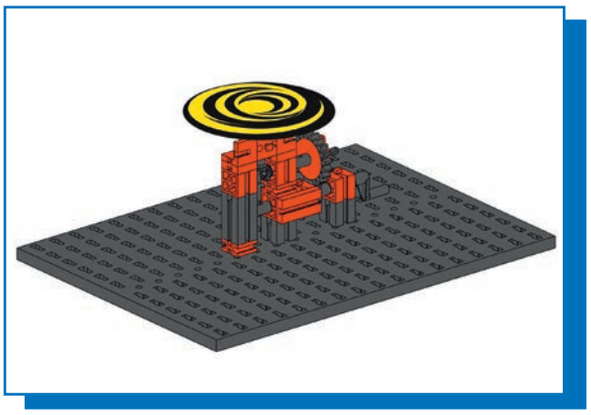

Optische Täuschung
Optical illusion
Illusion optique

Gezichtsbedrog
Ilusión óptica
Ilusão de ótica

Illusione ottica
Оптический обман
视错觉

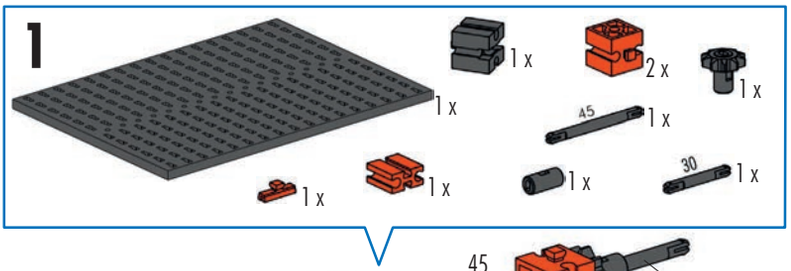

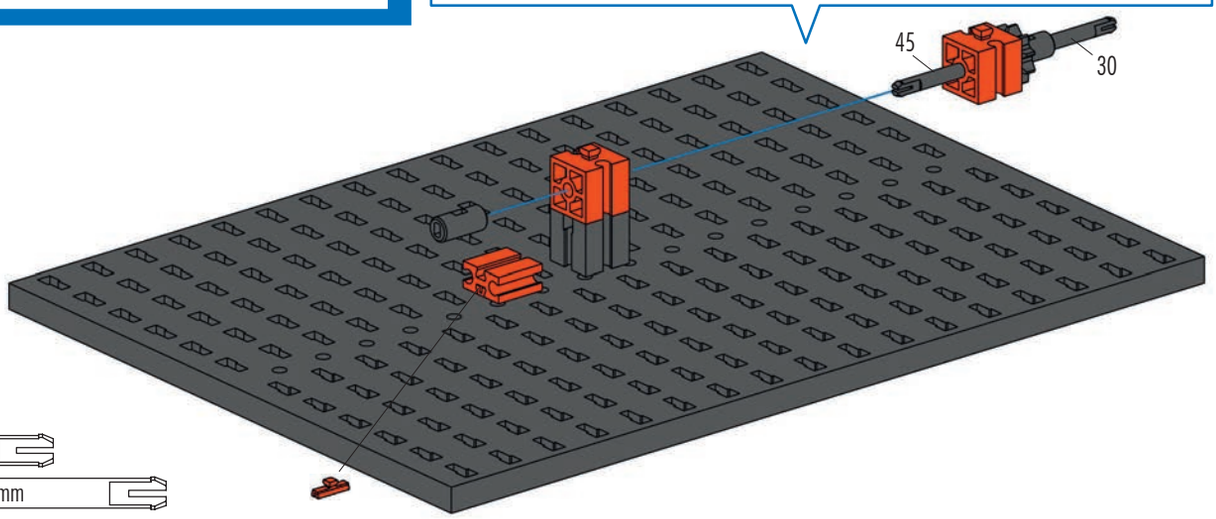

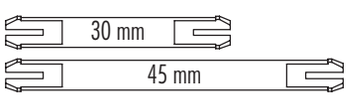

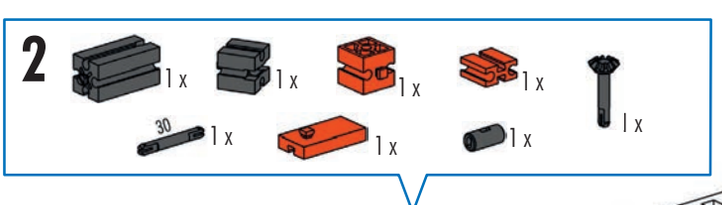

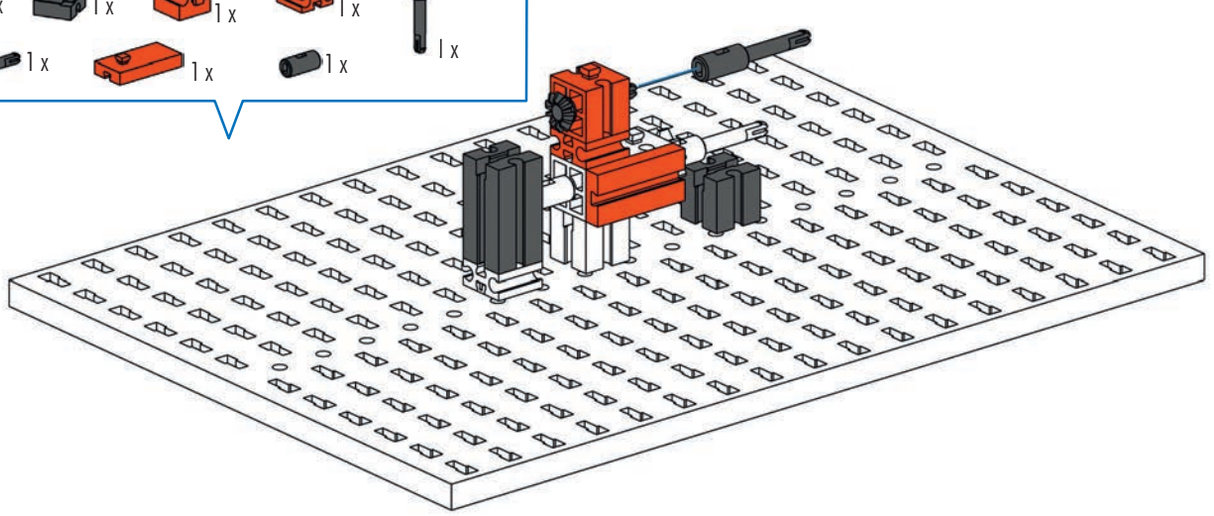

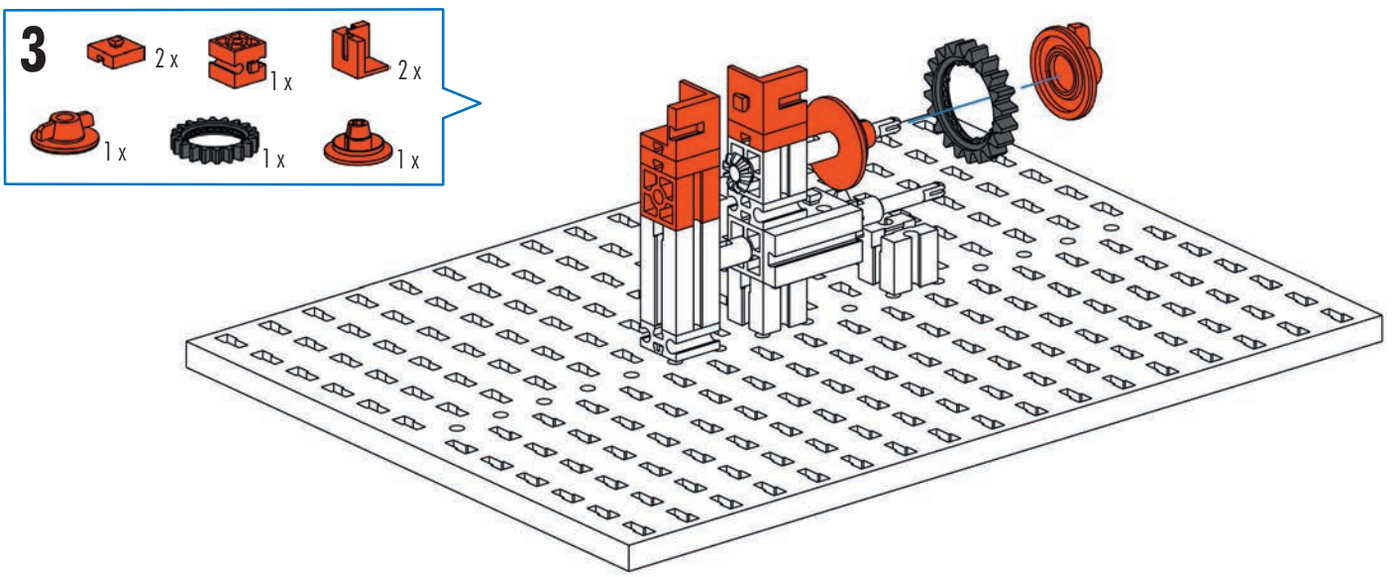
3
2 x
1 x
2 x
1 x
1 x
1 x

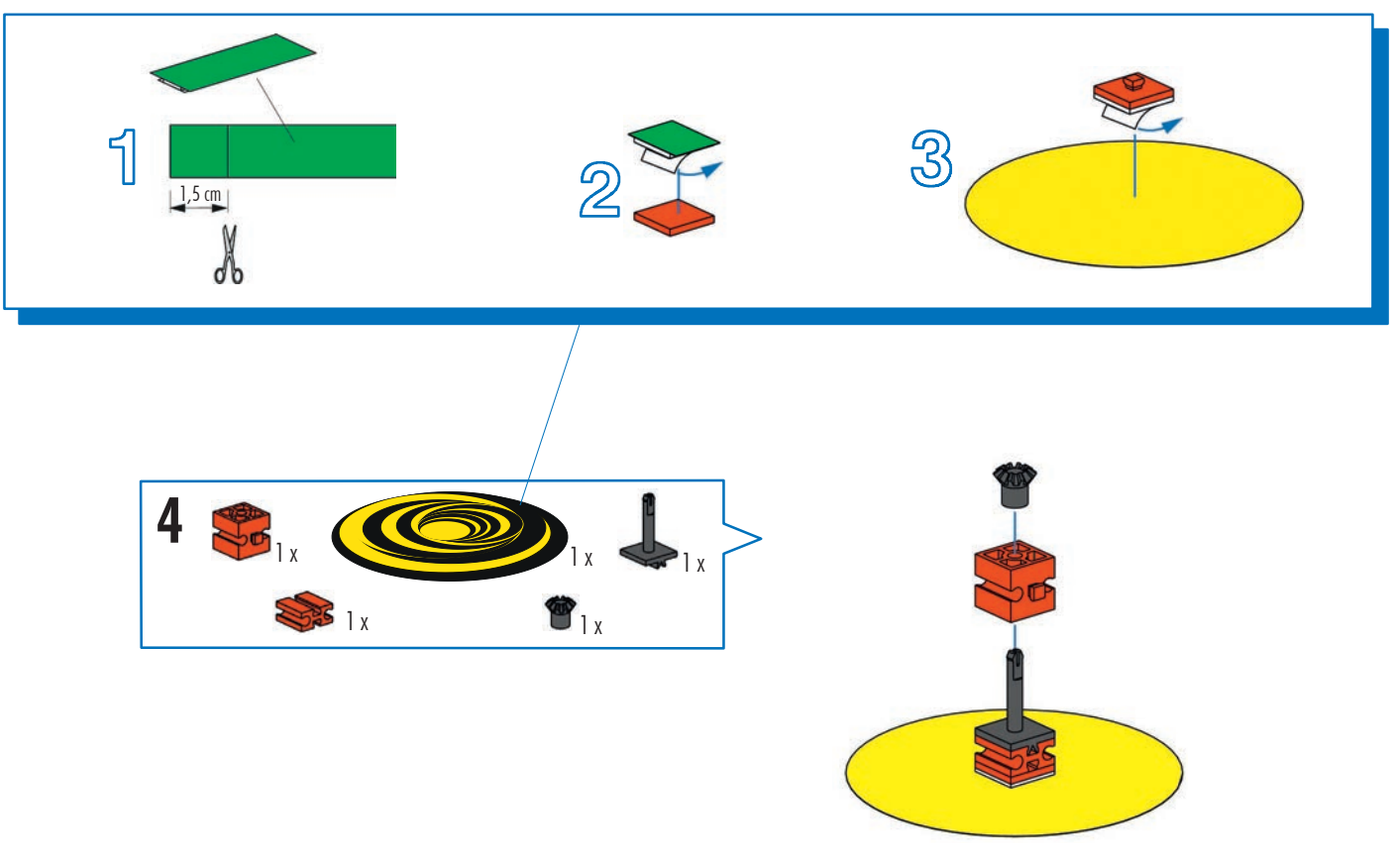
1
1,5 cm
2
3

4
1 x
1 x
1 x
1 x
1 x

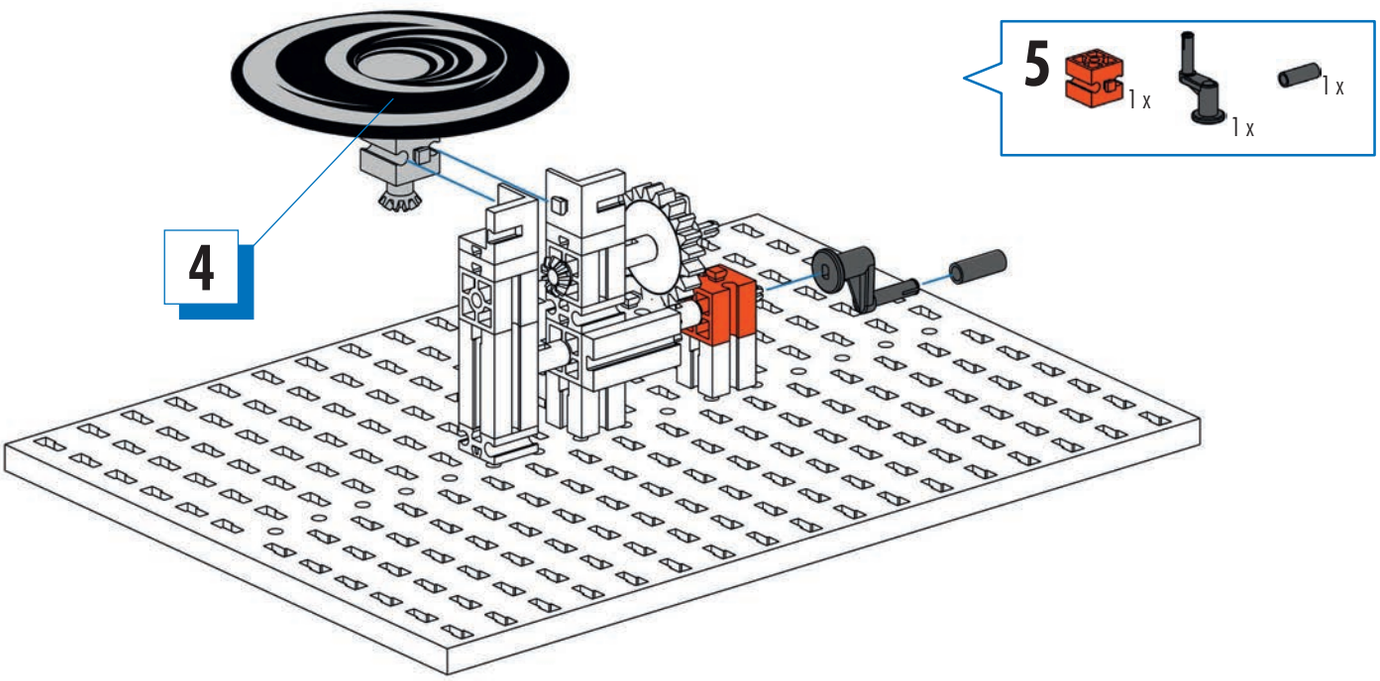
4
5
1 x
1 x
1 x

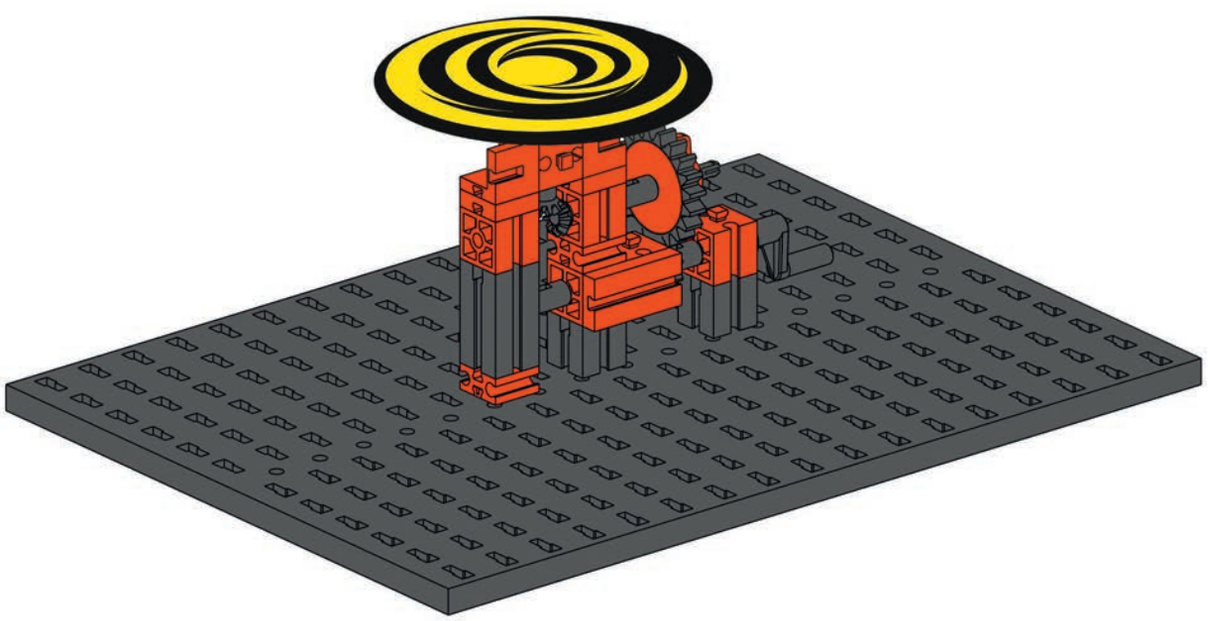

Fantastische Kreise
Fantastic circles
Cercles fantastiques

Fantastische cirkels
Círculos fantásticos
Círculo fantástico

Illusione ottica
Оптический обман
视错觉

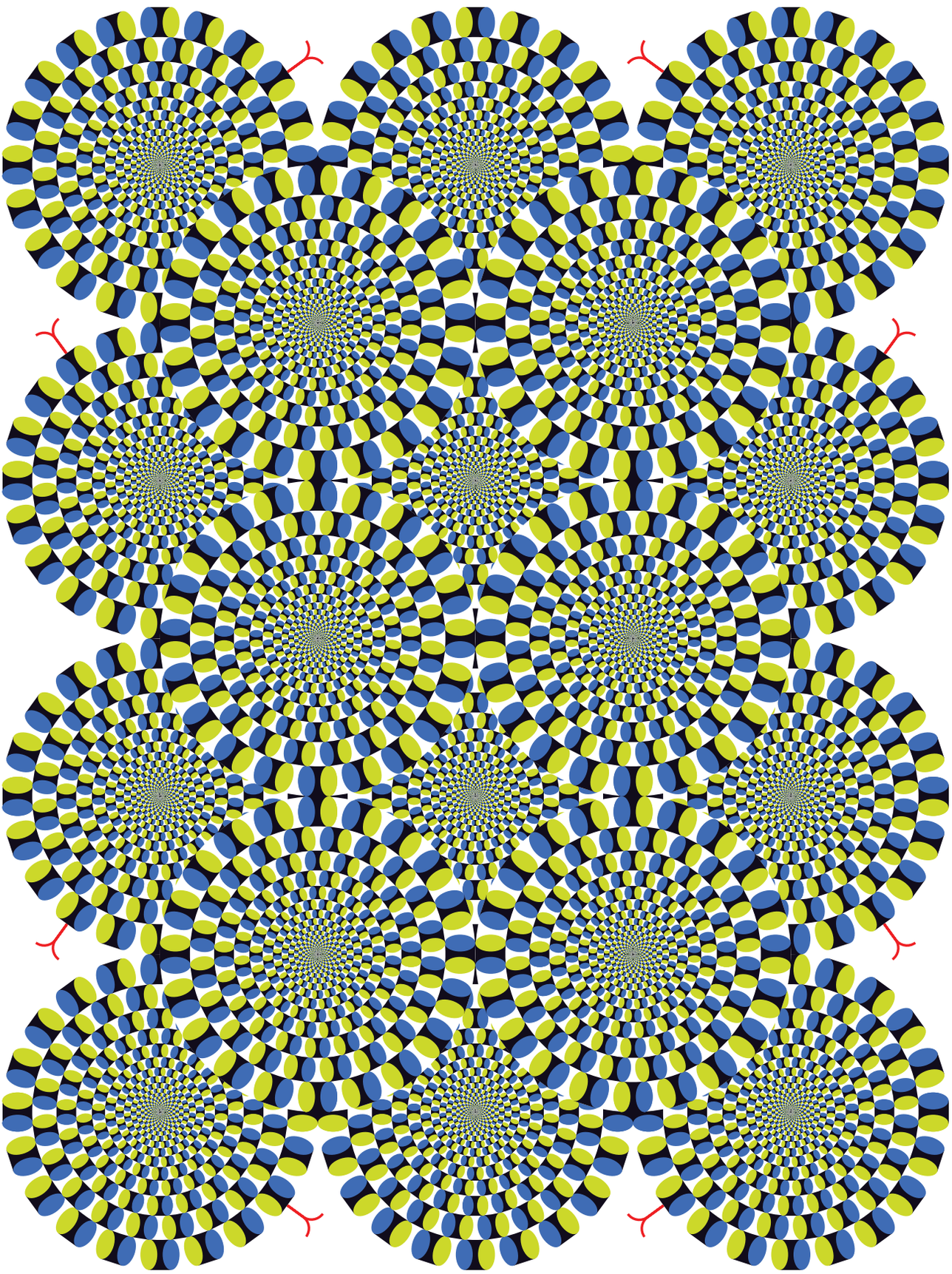

875

fischertechnik

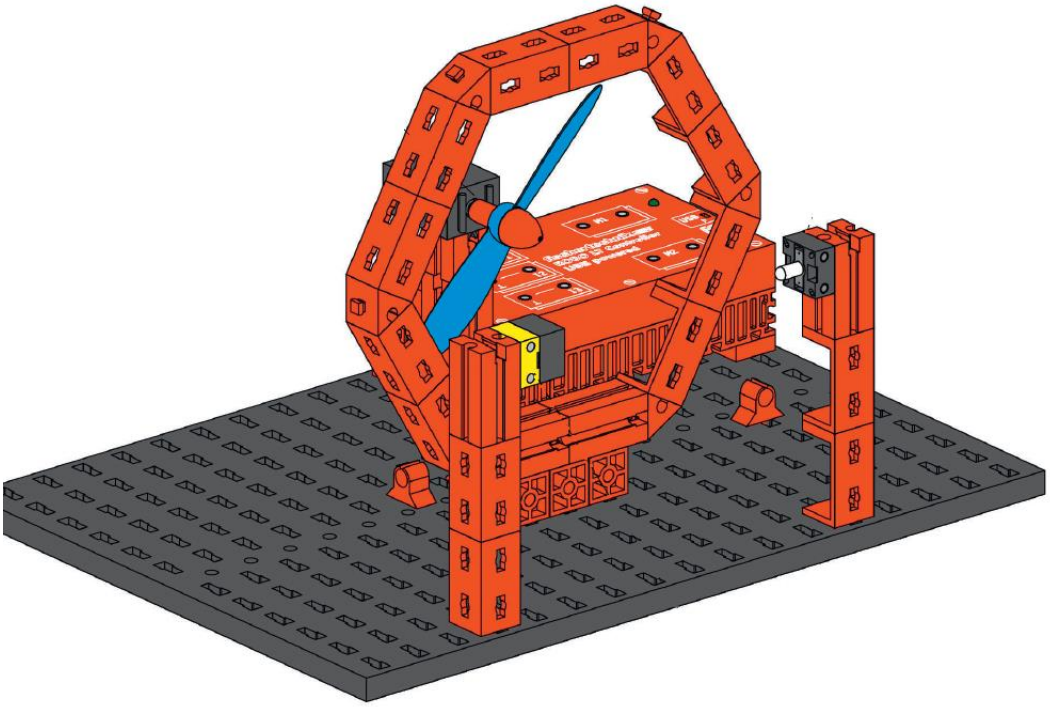

Introduction to Robotics Programming

Inhalt
Contents
Contenu

Inhoud
Contenido
Conteúdo

Contenuto
Содержание
目录

Einzelteilübersicht / Spare parts list / Liste des pièces détachées / Onderdelenoverzicht / Lista da piezas / Resumo de peça individual / Singoli componenti / Перечень деталей / 零件概览 3

Montagetipps / Tips for assembly / Tuyaux pour le montage / Montagetips / Consejos para el montaje / "Dicas" para montagem / Consigli per il montaggio / Советы по сборке / 装配建议 4

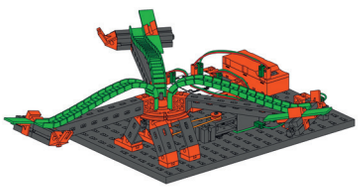

Karussell / Merry-go-round / Manège / Draaimolen / Tiovivo / Carrossel / Giostra / Карусель / 旋转木马 7

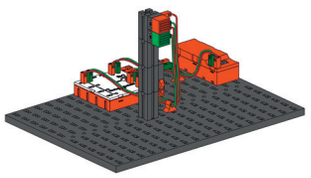

Fußgängerampel / Pedestrian light / Feu de signalisation pour piétons / Voetgangersstoplicht / Semáforo para peatones / Semáforo para pedestres / Semaforo pedonale / Светофор для пешеходов / 行人交通信号灯 12

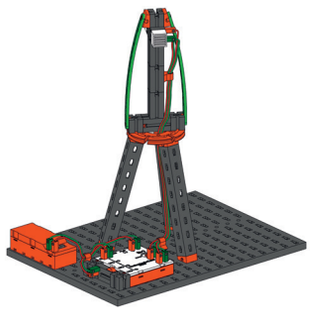

Leuchtturm mit Blinklicht / Lighthouse with blinking light / Phare à feu clignotant / Vuurtoren met knipperlicht / Faro con luz intermitente / Torre de iluminação com luz intermitente / Faro con luce lampeggiante / Маяк с мигающим светом / 带闪光信号灯的灯塔 15

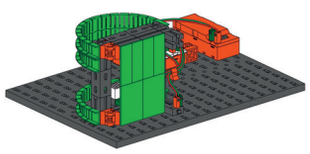

Kühlschrank / Refrigerator / Réfrigérateur / Koelkast / Nevera / Refrigerador / Frigorifero / Холодильник / 冰箱 19

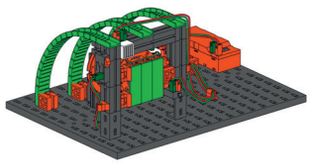

Waschmaschine / Washing machine / Lave-linge / Wasmachine/ Lavadora / Máquina de lavar roupa / Lavatrice / Стиральная машина / 洗衣机.....23

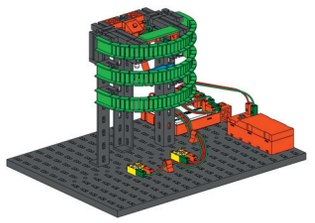

Händetrockner / Hand dryer / Sèche-mains / Handendroger / Secador de manos / Secador de mãos / Apparecchio asciugamani / Сушилка для рук / 干手机.....28

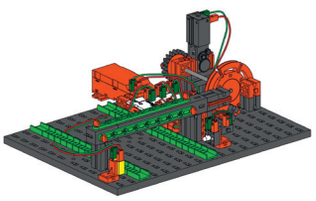

Schranke / Barrier / Barrière / Kasten / Barrera / Barreira / Barriera / Шлагбаум / 道口栏杆 32

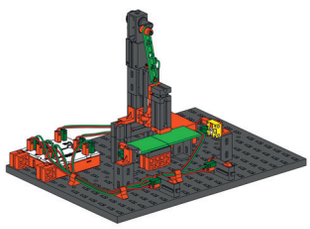

Stanze mit Sicherheitsschalter / Punch with safety switch / Poinçon avec interrupteur de sécurité / Stans met veiligheidsschakelaar / Punzonadora con interruptor de seguridad / Punção com interruptor de segurança / Punzonatrice con interruttore di sicurezza / Штамповочный пресс с защитным выключателем / 带安全开关的冲压机.....36

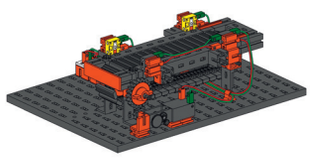

Förderband / Conveyor belt / Bande transporteuse / Transportband / Cinta transportadora / Correia transportadora / Nastro trasportatore / Ленточный транспортер / 输送带.....40

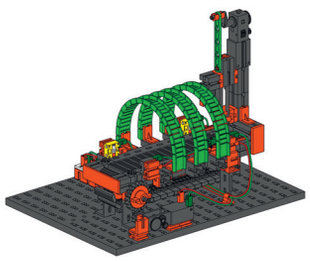

Förderband mit Stanze / Conveyor belt with punch / Bande transporteuse avec poinçon / Transportband met stans / Cinta transportadora con punzonadora / Correia transportadora com punção / Nastro trasportatore con punzonatrice / Ленточный транспортер со штамповочным прессом / 带冲压机的输送带.....45

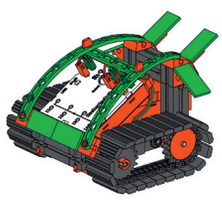

Fahrroboter / Mobile robot / Véhicule robot / Rijrobot / Robot desplazable / Robô condutor / Robot mobile / Робот-автомобиль / 机器人车.....49

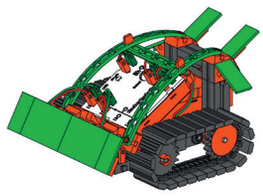

Hinderniserkenner /Hindrance detector / Détecteur d'obstacles / Obstakeldetector / Detector de obstáculos / Identificador de obstáculos / Rilevatore di ostacoli / Обнаружитель препятствий / 障碍物识别车.....53

Einzelteilübersicht
Spare parts list
Liste des pièces détachées

	31 010 7 x
	31 011 7 x
	31 019 2 x
	31 021 2 x
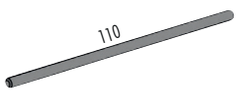	31 031 1 x
	31 058 2 x
	31 060 2 x
	31 061 2 x
	31 064 2 x
	31 078 2 x
	31 082 2 x
	31 336 16 x
	31 337 16 x
	31 360 1 x
	31 426 2 x
	31 436 2 x
	31 597 2 x
	31 779 2 x

Onderdelenoverzicht
Lista da piezas
Resumo de peça individual

	31 790 44 x
	31 848 4 x
	31 981 8 x
	31 982 20 x
	31 983 2 x
	32 064 7 x
	32 330 2 x
	32 850 7 x
	32 879 7 x
	32 881 8 x
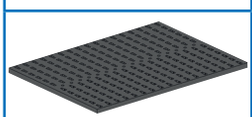	32 985 1 x
	35 031 2 x
	35 049 8 x
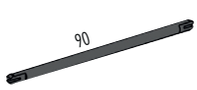	35 066 1 x
	35 073 1 x
	35 079 1 x
	35 084 1 x
	35 086 2 x

	35 087 1 x
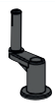	35 088 1 x
	35 945 1 x
	35 969 5 x
	36 134 2 x
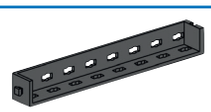	36 293 3 x
	36 323 4 x
	36 334 2 x
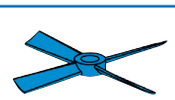	36 337 1 x
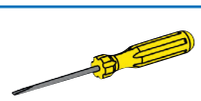	36 443 1 x
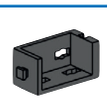	36 920 5 x
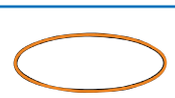	36 981 1 x
	37 237 4 x
	37 468 7 x
	37 636 1 x
	37 679 9 x
	37 681 1 x
	37 783 2 x

Singoli componenti
Перечень деталей
零件概览

	38 240 3 x
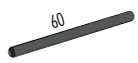	38 416 2 x
	38 423 10 x
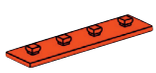	38 464 1 x
	128 659 90 x
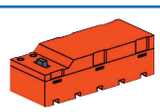	135 719 1 x
	136 775 1 x
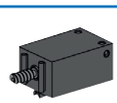	137 096 2 x
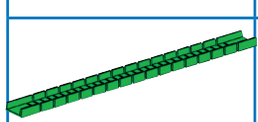	143 234 3 x
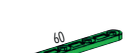	146 532 1 x
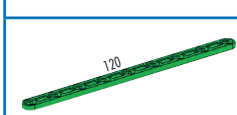	146 533 2 x
	156 504 7 x
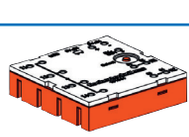	161 944 1 x
	162 135 2 x
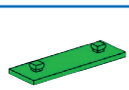	163 041 5 x
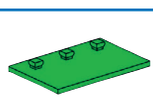	163 042 2 x

Montagetipps
Tips for assembly
Tuyaux pour le montage
Montagetips
Consejos para el montaje
"Dicas" para montagem
Consigli per il montaggio
Советы по сборке
装配建议

Kabel und Stecker
Plugs and cables
Fiches et des câbles
Stekkers en cables
Enchufes en cables
Cabos e contatos
Cavi e connettori
Провода и штекеры
电缆和插头

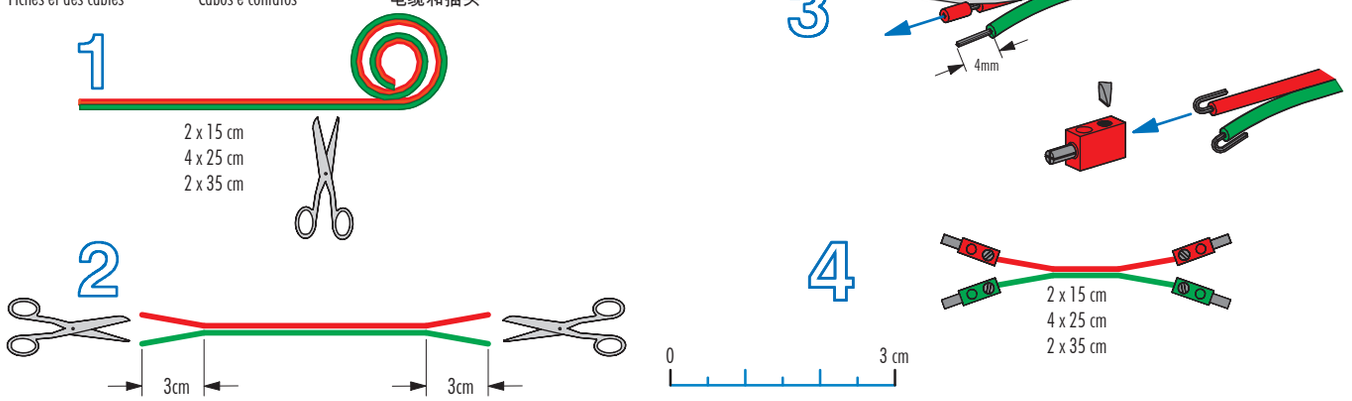

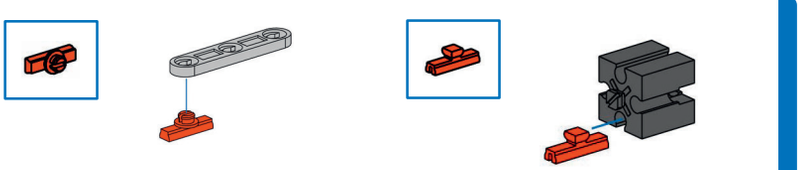

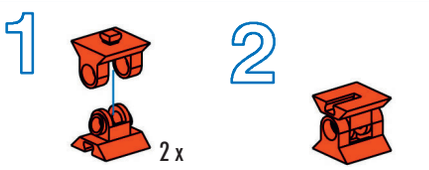

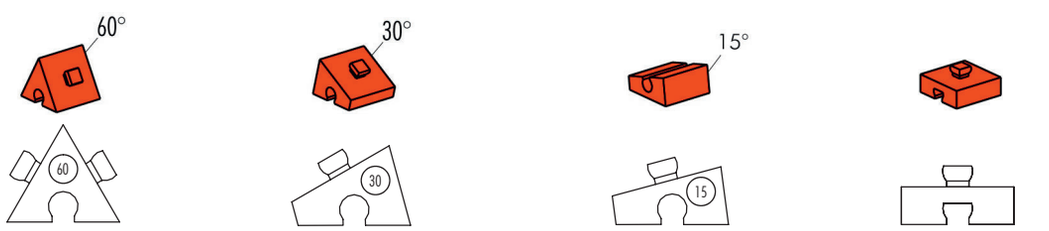

Fototransistor
Phototransistor
Photodétecteur
Fototransistor
Fototransistores
Fototransistor
Fototransistor
Фототранзистор
光电晶体管

9V ⎓

Achtung: Beim Anschluß auf richtige Polung achten. Rot = +
Caution: Make sure the terminals are connected correctly. Red = +
Attention: lors du raccordement, veiller à ce que la polarisation soit exacte, rouge = +
Pas op: let bij het aansluiten op de juiste polariteit, rood = +
Atencioón: al conectar, procurar que los polos estén correctamente colocados, roja = +
Atenção: Por ocasião da conexão atentar para a polaridade correta. Vermelho = +
Attenzione: nel collegamento osservare la corretta polarità. Rosso = +
Внимание: при подключении соблюдать полярность. Красный = +
注意：连接时应注意极性正确。红色 = +

Lichtschranken LED
Light barriers LED
LED barrières photoélectriques
Lichtsluis-LED
Barreras de luz LED
Células fotoelétricas de LED
Barriere fotoelettriche LED
Световой барьер LED
光电LED

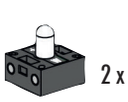

9 V ⎓ / 0,01 A

Achtung: Beim Anschluß auf richtige Polung achten.
Caution: Make sure the terminals are connected correctly.
Attention: lors du raccordement, veiller à ce que la polarisation soit exacte.
Pas op: let bij het aansluiten op de juiste polariteit.
Atencioón: al conectar, procurar que los polos estén correctamente colocados.
Atenção: Por ocasião da conexão atentar para a polaridade correta.
Attenzione: nel collegamento osservare la corretta polarità.
Внимание: при подключении соблюдать полярность.
注意：连接时应注意极性正确。

- Alle Einzelteile, insbesondere bewegliche Teile sind falls notwendig zu warten und zu reinigen.
- All components, especially moving parts, should be maintained and cleaned as necessary.
- Toutes les pièces détachées et en particulier les pièces mobiles, sont, si nécessaire, à entretenir et à nettoyer.
- Alle onderdelen, vooral de bewegende delen, kunnen, indien noodzakelijk, onderhouden en gereinigd worden.
- Es necesario limpiar y mantener en buen estado todas las diferentes piezas - especialmente las piezas móviles.
- Caso necessário, todas as peças individuais, especialmente peças móveis, tem que ser submetidas à manutenção e ser limpadas.
- Se necessario, tutti i singoli componenti, soprattutto le parti mobili, si devono eventualmente sottoporre a manutenzione e pulizia.
- Все детали, особенно подвижные, требуют ухода и чистки.
- 必要时应保养和清洁所有零件，尤指运动部件。

Sicherheitshinweise
Safety Information
Consignes de sécurité
Veiligheidsrichtlijnen
Indicaciones de seguridad
Observações sobre segurança
Informazioni per la sicurezza
Указания по технике безопасности
安全指南

- Das Spielzeug darf nur mit einer der folgenden fischertechnik Energiequellen benutzt werden: Art-Nr.: 135719 Batteriehalter 9V oder Art.-Nr.: 35537 Accu Pack 8,4V.
- The toy may only be used with one of the following fischertechnik energy sources: Art No.: 135719 battery tray 9V or Art No.: 35537 Accu Pack 8.4V.
- L'utilisation de ce jouet n'est permis qu'avec l'une des sources d'énergie fischertechnik suivantes: Art. n° : 135719 support de pile 9 volts ou Art. n° : 35537 pack d'accumulateurs 8,4 volts.
- Het speelgoed mag uitsluitend met een van de volgende fischertechnik energiebronnen worden gebruikt: art.nr.: 135719 batterijhouder 9V of art.nr.: 35537 accupack 8,4V
- El juguete se debe utilizar únicamente con una de las siguientes fuentes de energía: Art. No. 135719 soporte de pila de 9V o Art. No. 35537 paquete acumulador de 8,4V.
- O brinquedo somente pode ser utilizado com uma das seguintes fontes de energia da fischertechnik: art. nº: 135719 Suporte de bateria de 9 V ou art. nº: 35537 Bloco de bateria de 8,4V.
- Questo giocattolo può essere utilizzato solo con le seguenti fonti di energia fischertechnik: cod. prod.: 135719 portabatteria da 9V oppure cod. prod.: 35537 confezione batterie da 8,4V.
- Игрушку можно использовать только с одним из следующих источников энергии от fischertechnik: арт. №: 135719 держатель батарейки 9В или арт. №: 35537 Accu Pack 8,4В
- 该玩具只允许使用如下的慧鱼 (fischertechnik) 能量源：商品号：135719，9V 电池夹，或者商品号：35537，8.4V 电池套件 (Accu Pack)

- Die Modelle dürfen nur an Geräte der Schutzklasse II angeschlossen werden, die mit dem entsprechenden Symbol gekennzeichnet sind.
- Ensure that the models are connected only to equipment rated in protection category II and marked with the appropriate symbol.
- Le raccordement des maquettes est uniquement permis à des appareils dotés de la catégorie de protection II qui portent le pictogramme respectif.
- De modellen mogen alleen op apparaten uit beschermingsklasse II worden aangesloten, die zijn voorzien van het bijbehorende symbool.
- Los modelos sólo pueden ser conectados a aparatos de clase de protección II que están identificados con el símbolo correspondiente.
- Os modelos somente devem ser conectados nos aparelhos da classe de proteção II, que são identificados com o símbolo correspondente.
- I modelli devono essere collegati solo ad apparecchi della classe di protezione II, contrassegnati con il relativo simbolo.
- Модели можно подключать только к приборам класса защиты II, обозначенным соответствующим знаком.
- 这些模型只允许连接到具有防护等级 II 的装置上，这类装置被用相应的符号进行了标识。

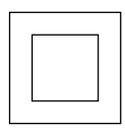

- **Elektromagnetische Störungen**
  Sollte der Controller durch externe elektromagnetische Einflüsse gestört werden, kann er nach Ende der Störung bestimmungsgemäß weiter benutzt werden. Eventuell muss die Stromversorgung kurz unterbrochen und der Controller neu gestartet werden.
- **Electromagnetic Interference**
  If the Controller is affected by external electromagnetic influences, it can still be used for the purpose intended after the end of the interference. It is possible that the power supply will have to be interrupted for a short time and the Controller restarted.
- **Interférences électromagnétiques**
  L'emploi conforme à l'usage prévu du Controller perturbé par des interférences électromagnétiques externes est possible après l'élimination de l'origine de la perturbation. Il se pourrait cependant qu'il soit requis d'interrompre l'alimentation en courant brièvement et de redémarrer le Controller.
- **Elektromagnetische storingen**
  Als de Controller door externe elektromagnetische invloeden wordt gestoord, kan deze na het verdwijnen van de storing volgens voorschrift verder worden gebruikt. Eventueel moet de voedingsspanning kort worden onderbroken en de Controller opnieuw worden gestart.
- **Interferencias electromagnéticas**
  En caso que el Controller sea interferido por influencias electromagnéticas externas, tras finalizar la interferencia puede continuar siendo utilizado para los fines previstos. Eventualmente se debe interrumpir brevemente la alimentación de corriente y el Controller ser reiniciado.
- **Perturbações eletromagnéticas**
  Se o Controller for perturbado devido a influências externas eletromagnéticas, ele pode continuar a ser utilizado para o fim especificado depois do final da perturbação. Eventualmente, a alimentação de corrente deve ser interrompida brevemente e o Controller iniciado novamente.
- **Disturbi elettromagnetici**
  Se il Controller viene disturbato da influssi elettromagnetici esterni, al termine del disturbo si può continuare a utilizzarlo senza problemi. Eventualmente si deve interrompere brevemente l'alimentazione elettrica e riavviare il Controller.
- **Электромагнитные помехи**
  Если внешние электромагнитные воздействия создают помехи для работы контроллера, то после окончания действия этих помех он может работать по назначению дальше. Возможно потребуется на короткое время прервать подачу электропитания и перезапустить контроллер.
- **电磁干扰**
  如果该控制器受到外部电磁影响的干扰，则可在干扰结束后按照规定继续使用。也有可能必须短时切断电源，然后重新启动控制器。

- Achtung! Verletzungsgefahr an Bauteilen mit funktionsbedingten scharfen Kanten und Spitzen!
- Caution! Be careful not to hurt yourself on components with sharp or pointed edges!
- Attention! Risque de blessure sur les élements comportant des arêtes et o pointes vives indispensables au bon fonctionnement!
- Let op! U kunt zich bezeren aan bouwstenen met sherpe randen of punten!
- Attenzione! Esiste il pericolo di lesione con i pezzi di costruzione che hanno bordi e punte spigolosi necessari per la funzionalita del pezzo!
- Atenção! Perigo de ferimentos em peças componentes com cantos vivos e pontas obrigatórios para o funcionamento !
- Attenzione! Pericolo di lesioni dovute a componenti con spigoli vivi e punte per motivi funzionali!
- Будьте осторожны! Об острые края деталей и и наконечники можно порезаться!
- 注意！
  因功能需要而带有锋利的棱边和尖角的部件可能会带来受伤危险！

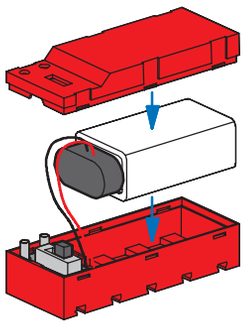

Batterie ist nicht Inhalt der Packung
Battery not included
Batterie non comprise
De batterij wordt niet meegeleverd
La bateria no está incluida en el suministro
A bateria não é o conteúdo da embalagem
La batteria non è inclusa nella confezione
Батарея в комплект не входит
包装中不含电池

1 Batterie 9Volt-Block Alkaline oder 1 NiMH-Akku 9V

- Nicht wiederaufladbare Batterien dürfen nicht geladen werden
- Aufladbare Batterien dürfen nur von Erwachsenen geladen werden
- Aufladbare Batterien sind aus dem Batteriehalter herauszunehmen, bevor sie geladen werden.
- Batterien müssen mit der richtigen Polarität eingelegt werden.
- Leere Batterien müssen aus dem Spielzeug herausgenommen werden
- Die Anschlussklemmen dürfen nicht kurzgeschlossen werden.
- Verbrauchte Batterien dem Sondermüll zuführen.
- Drähte nicht in Steckdose einführen!
- Ladegerät regelmäßig auf Schäden überprüfen.Bei einen Schaden darf das
- Ladegerät bis zur vollständigen Reparatur nicht mehr verwendet werden.

9V rechargeable battery or 9 V alkaline dry cell

- Do not attempt to charge NON-rechargeable batteries.
- Rechargeable batteries are only to be charged by adults.
- Take rechargeable batteries out of the battery tray before charging them.
- Insert batteries with the correct polarity.
- Remove dead batteries from the toy.
- Do not short circuit the connecting terminals!
- Discard spent dry cells at special waste disposal centre.
- Do not insert the wires into an outlet!
- Regularly inspect battery charger for damage.If the battery charger has been damaged, it should not be used further until fully repaired.

pile 9V où accu 9V

- Il est interdit de recharger des piles qui ne sont pas des accumulateurs
- Le chargement des accumulateurs doit toujours se faire par des adultes
- Retirer les accumulateurs du support de pile avant de les recharger.
- Veiller à la polarité correcte lors de la mise en place des piles.
- Retirer impérativement les piles ou accumulateurs vides du jouet.
- Il est interdit de court-circuiter les bornes de raccordement.
- Jeter les piles usagées dans un conteneur spécial réservé à cet effet.
- Ne pas introduire les fils dans une prise !
- Contrôlez régulièrement le chargeur en vue d'éventuelles détériorations
- En cas de détérioration, il est interdit d'utiliser le chargeur jusqu'à ce qu'il ait été intégralement réparé

alkaline batterije of oplaadbare batterije (9Volt)

- Niet-oplaadbare batterijen mogen niet worden opgeladen.
- Oplaadbare batterijen mogen uitsluitend door volwassenen worden opgeladen.
- Oplaadbare batterijen moeten uit de batterijhouder worden verwijderd, voordat deze worden opgeladen.
- De batterijen moeten met de juiste polariteit worden geplaatst.
- Lege batterijen moeten uit het speelgoed worden verwijderd.
- De aansluitklemmen mogen niet worden kortgesloten.
- Afleveren gebruikte batterijen bij het klein chemisch afval (KCA).
- Geen draden in de contactdoos steken!
- Laadtoestel regelmatig controleren op schade.Bij schade mag het laadtoestel niet meer gebruikt worden tot het volledig hersteld is.

pila alcalina bloque de 9 Voltios o acumulador NiMH- de 9 Voltios

- Las pilas no recargables no pueden ser cargadas
- Las pilas recargables sólo pueden ser cargadas por un adulto
- Las pilas recargables deben ser extraídas del compartimiento de pilas antes de que sean cargadas.
- Las pilas deben ser colocadas con la polaridad correcta.
- Las pilas descargadas deben ser extraídas del juguete
- Los bornes de conexión no pueden ser puestos en cortocircuito.
- Retirar las baterias viejas, desechándolas en un depósito de basuras especiales.
- No introducir hilos en la toma de corriente!
- Comprobar con regularidad si el cargador presenta daños.En caso de presentar daños, el cargador no debe volver a ser utilizado hasta que esté completamente reparado.

Bateria alcalina de bloco de 9 V ou acumulador NiMH- de 9 V

- Pilhas não recarregáveis não devem ser novamente carregadas.
- Pilhas recarregáveis somente devem ser recarregadas por adultos.
- Pilhas recarregáveis devem ser retiradas do compartimento de pilhas antes de serem carregadas.
- As pilhas devem ser colocadas com a polaridade correta.
- As pilhas descarregadas devem ser retiradas do brinquedo.
- Os terminais de conexão não devem ser curto-circuitados.
- Eliminar as baterias esgotadas como desperdício perigoso
- Nunca introduzir fios na tomada!
- Verificar regularmente se o carregador apresenta danos.Em caso de dano, o carregador não deverá ser utilizado enquanto não estiver plenamente consertado.

1 batteria alcalina da 9 V o 1 batteria NiMH- ricaricabile da 9V

- Le batterie non ricaricabili non devono essere ricaricate
- Le batterie ricaricabili devono essere ricaricate da persone adulte
- Le batterie ricaricabili si devono estrarre dal supporto prima di ricaricarle.
- Le batterie si devono inserire rispettando la polarità.
- Togliere le batterie dal giocattolo quando sono scariche
- I morsetti di allacciamento non devono essere cortocircuitati.
- Smaltire le batterie usate negli appositi contenitori per la raccolta differenziata.
- Non inserire i fili nella presa elettrica.
- Controllare periodicamente se il caricabatterie presenta dei danni.In caso di danni, il caricabatterie non deve più essere utilizzato fino alla riparazione.

1 алкалиновая батарейка на 9 В или 1 никель-кадмиевый аккумулятор, 9 В

- Не пытайтесь заряжать неперезаряжаемые батарейки.
- Зарядку перезаряжаемых аккумуляторов разрешается выполнять только взрослым.
- Перед зарядкой перезаряжаемых аккумуляторов извлеките их из аккумуляторного отсека.
- При установке аккумуляторов на место соблюдайте полярность.
- Разряженные батарейки необходимо извлечь из игрушки.
- Не замыкайте накоротко соединительные клеммы.
- Использованные батареи утилизовать как спецотходы.
- Не вставляйте в розетку провода!
- Регулярно проверяйте зарядное устройство на отсутствие повреждений.При налиРии повреждений использовать зарядное устройство до выполнения его полного ремонта не разрешается.

1 个 9V 的碱性方电池或 1 个 9V 的 NiMH- 蓄电池

- 不得给非充电电池充电
- 只允许由成年人给充电电池充电
- 在充电前必须将充电电池从电池夹中取出。
- 必须按照正负极正确放入电池。
- 必须从玩具中取出没有电的电池
- 接线柱不允许被短路。
- 用完了的电池应作为特种垃圾处理。
- 禁止将金属丝插入插座！
- 经常检查充电器是否有损坏情况。如果充电器有损，直到完全修好为止不 可以再使用。

EU-Konformitätserklärung:
Hiermit erklärt die fischertechnik GmbH, dass der „**BT Smart Controller, Art.-Nr. 161944**" der Richtlinie 2014/53/EU entspricht. Der vollständige Text der EU-Konformitätserklärung ist unter der folgenden Internetadresse verfügbar: www.fischertechnik.de/BT-Smart-Controller

EU Declaration of Conformity:
fischertechnik GmbH hereby declares that the „**BT Smart Controller, item no.161944**" complies with Directive 2014/53/EU. The complete text for the EU Declaration of Conformity can be found at the following Internet address: www.fischertechnik.de/BT-Smart-Controller

Déclaration de conformité européenne :
La société fischertechnik GmbH déclare par la présente que le « **BT Smart Controller, art. n° 161944** » est conforme à la directive 2014/53/CEE. Vous trouverez le texte intégral de la déclaration de conformité européenne sur Internet à l'adresse suivante : www.fischertechnik.de/BT-Smart-Controller

EU-conformiteitsverklaring:
Hiermee verklaart de fischertechnik GmbH, dat de „**BT Smart Controller, art.-nr. 161944**" aan de richtlijn 2014/53/EU voldoet. De volledige tekst van de EU-conformiteitsverklaring is op het volgende internetadres beschikbaar: www.fischertechnik.de/BT-Smart-Controller

Declaración UE de conformidad:
Por la presente, fischertechnik GmbH declara que el „**BT Smart Controller, núm. de art. 161944**" cumple la directiva 2014/53/UE. El texto integral de la declaración UE de conformidad está disponible en la dirección de Internet siguiente: www.fischertechnik.de/BT-Smart-Controller

Declaração de conformidade da CE:
Por essa, a fischertechnik GmbH declara que o „**BT Smart Controller, art.no. 161944**" corresponde à Diretiva 2014/53/CE. O texto completo da declaração de conformidade da CE está disponível no seguinte endereço da Internet: www.fischertechnik.de/BT-Smart-Controller

Dichiarazione di conformità UE:
con la presente la fischertechnik GmbH dichiara che il „**BT Smart Controller, num. art. 161944**" è conforme alla direttiva 2014/53/UE. Il testo completo della dichiarazione di conformità è disponibile al seguente indirizzo Internet: www.fischertechnik.de/BT-Smart-Controller

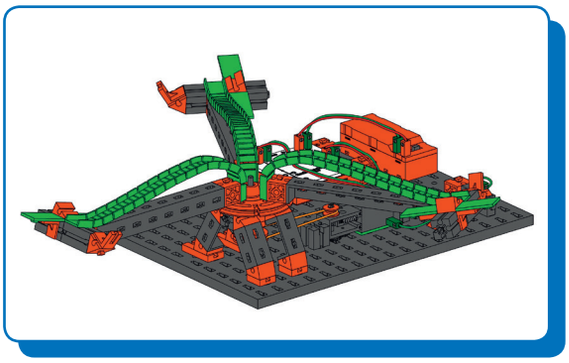

Karussell
Merry-go-round
Manège
Draaimolen
Tiovivo
Carrossel
Giostra
Карусель
旋转木马

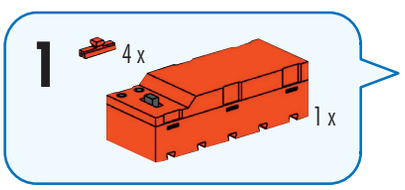

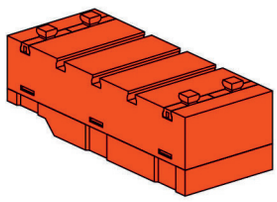

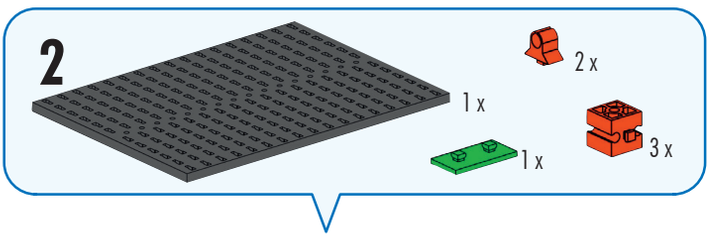

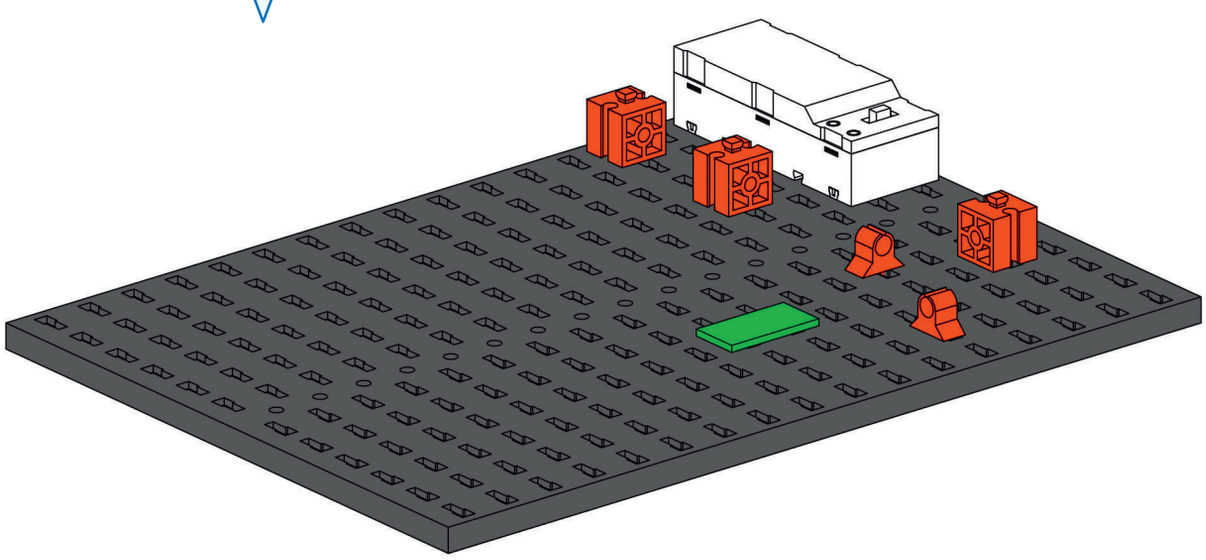

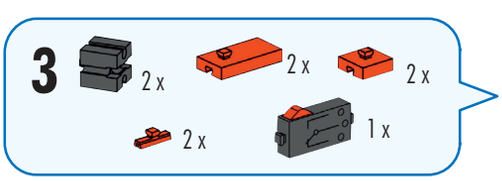

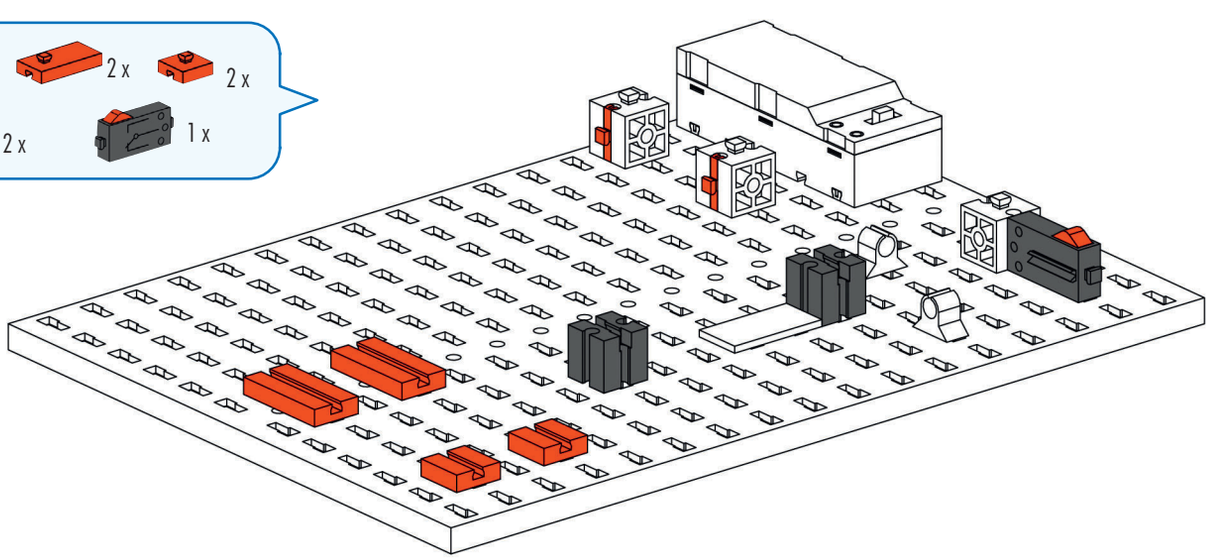

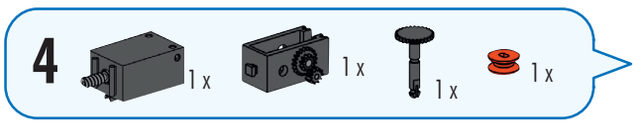
4
1 x
1 x
1 x
1 x

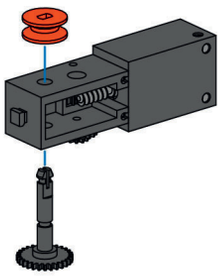

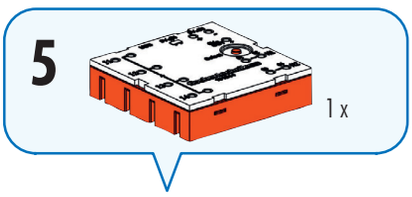
5
1 x

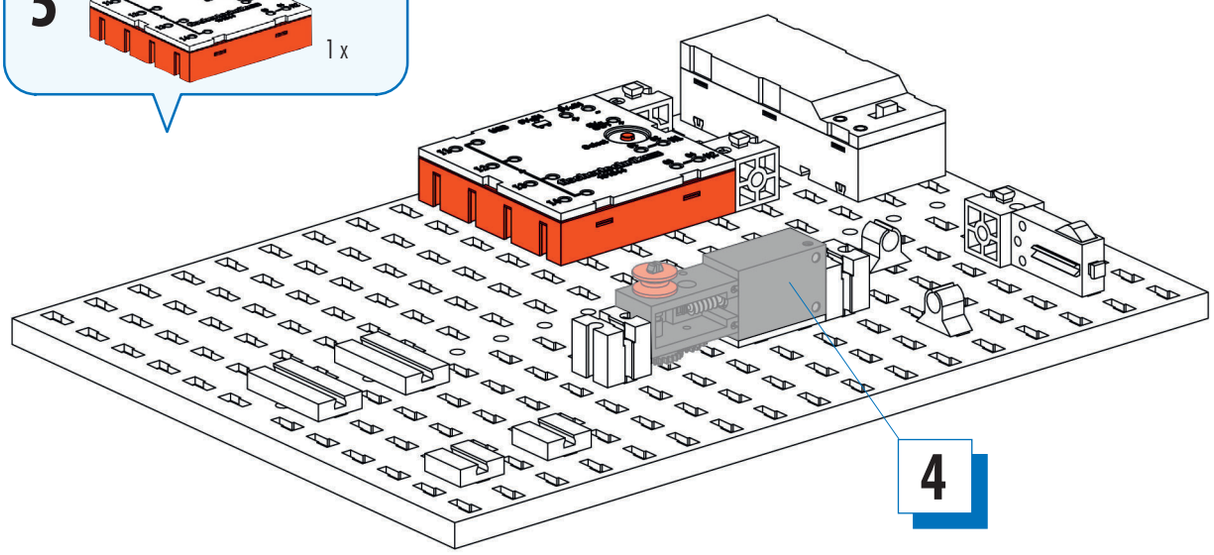
4

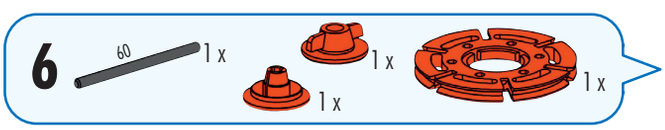
6
60
1 x
1 x
1 x
1 x
60 mm

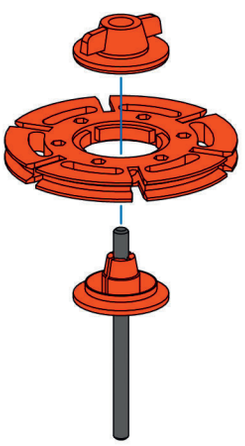

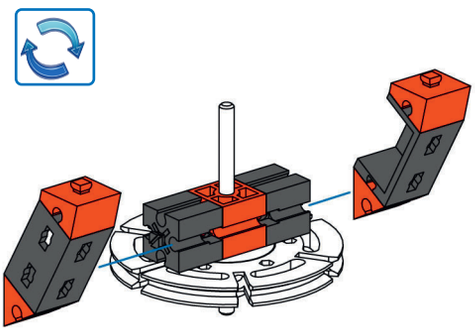

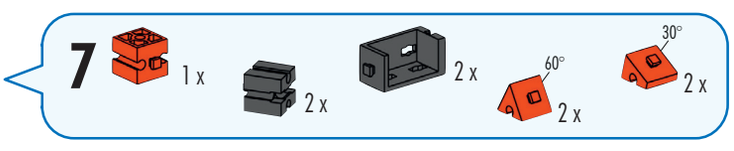
7
1 x
2 x
2 x
60°
2 x
30°
2 x

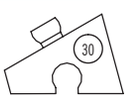
30

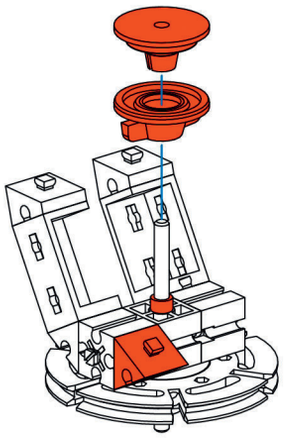

8

1 x

1 x

1 x

60°

1 x

9

2 x

1 x

30°

2 x

60°

1 x

30

8

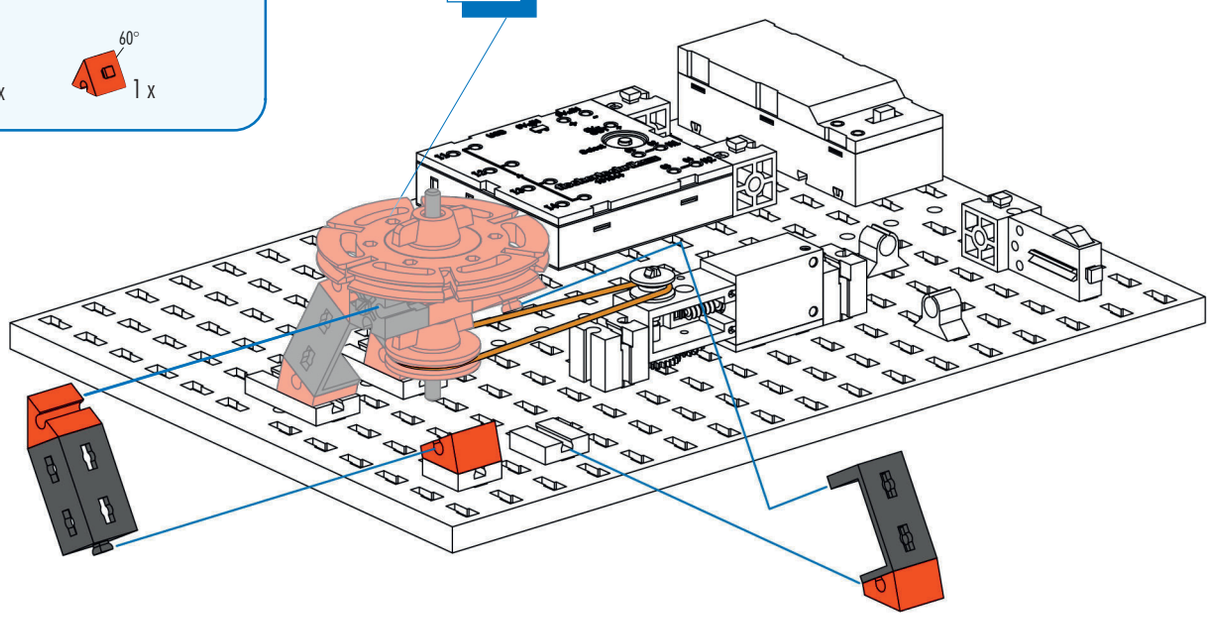

3 x

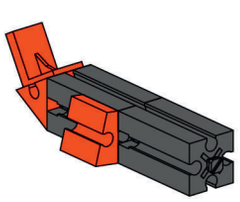

10

6 x

3 x

60°

3 x

15°

3 x

15

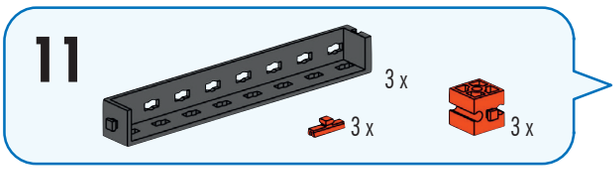
11
3 x
3 x
3 x

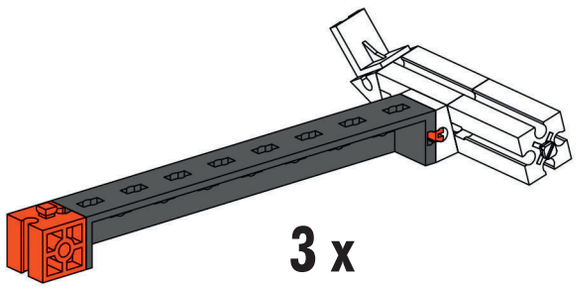
3 x

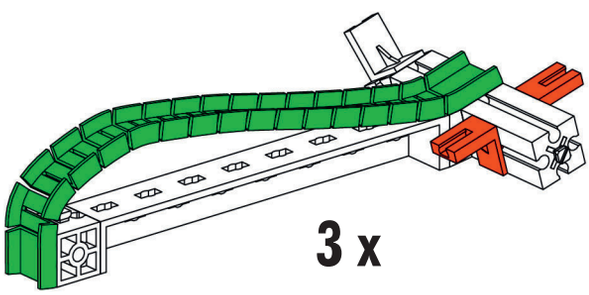
3 x

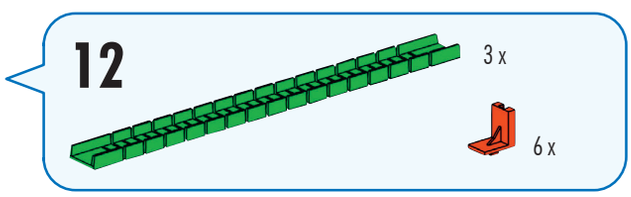
12
3 x
6 x

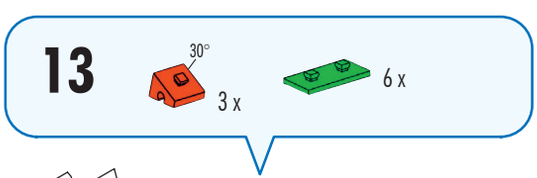
13
30°
3 x
6 x

30

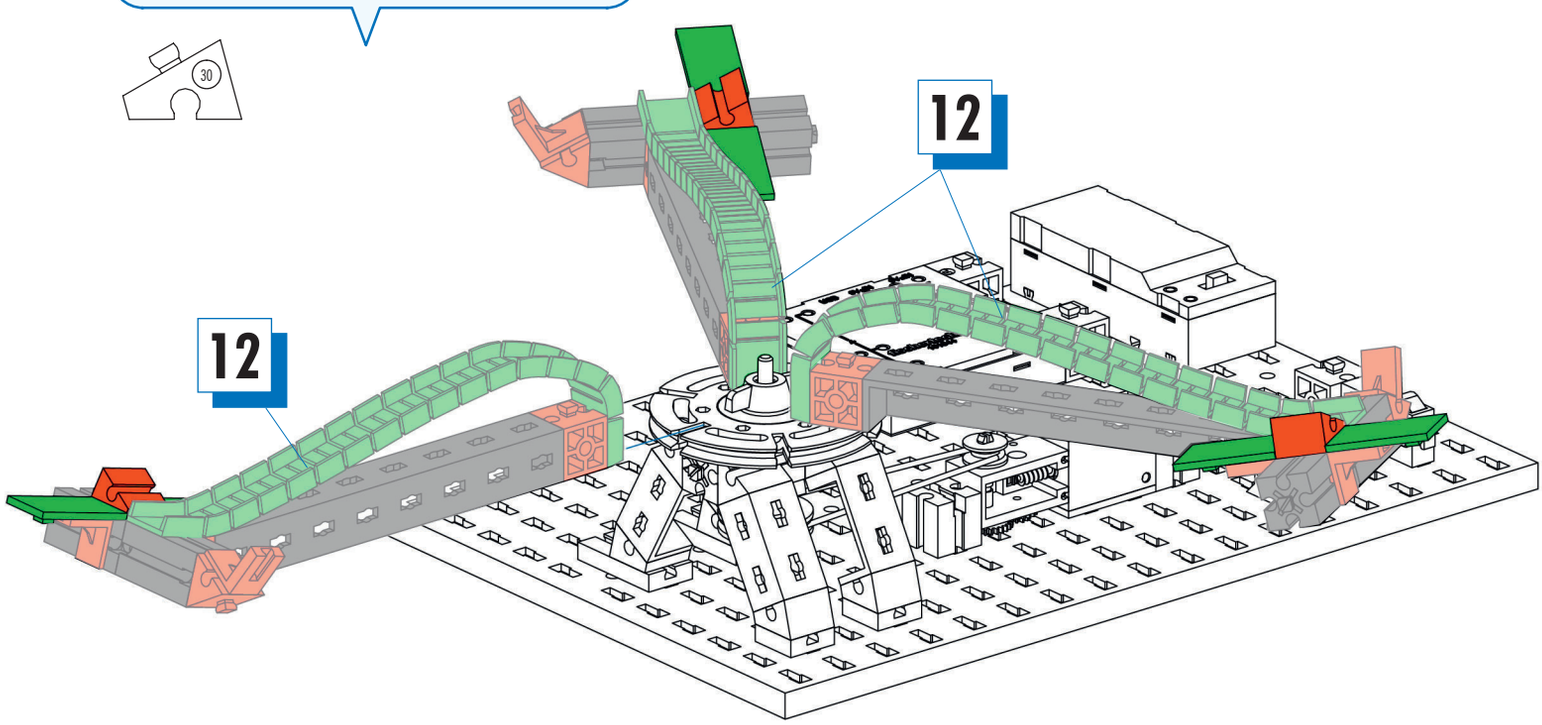
12
12

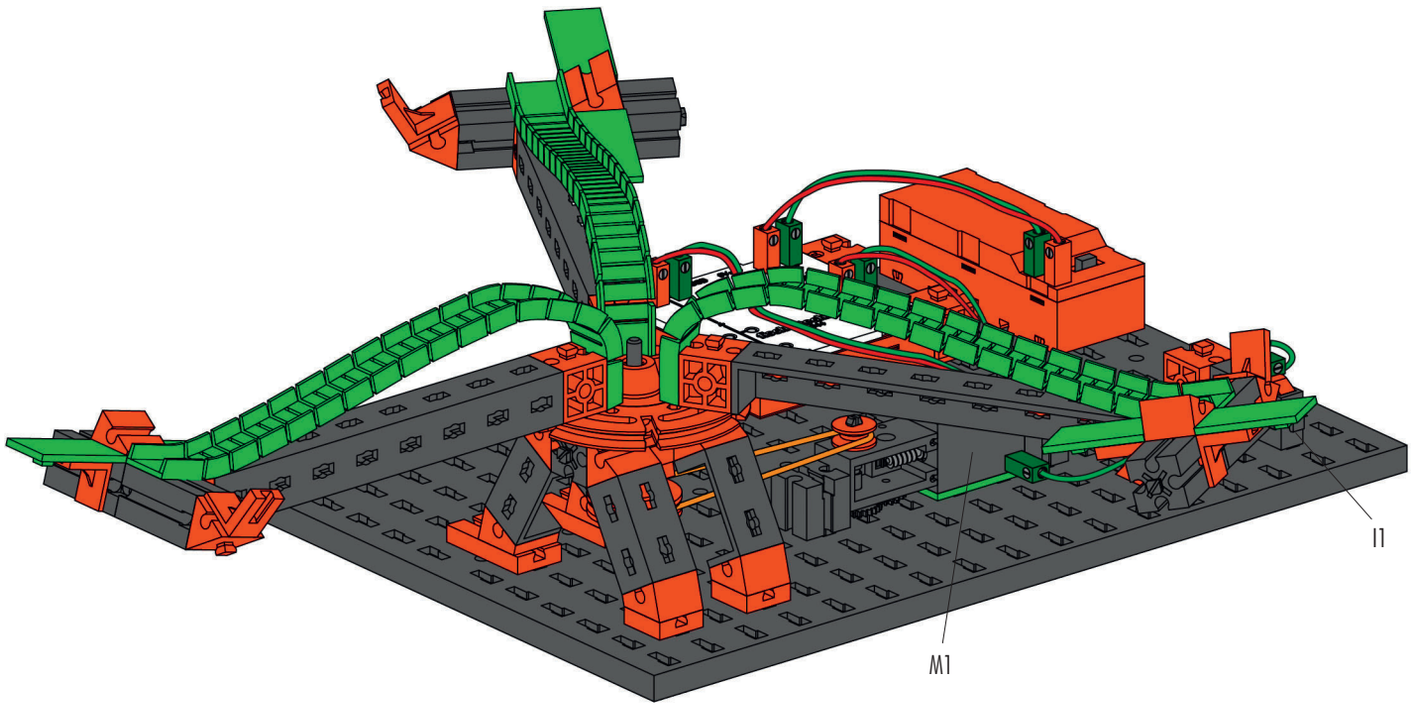

Schaltplan
Circuit diagram
Plan électrique

Schakelschema
Diagrama de circuitos
Plano elétrico de ligação

Schema elettrico
Схема подключения
电路图

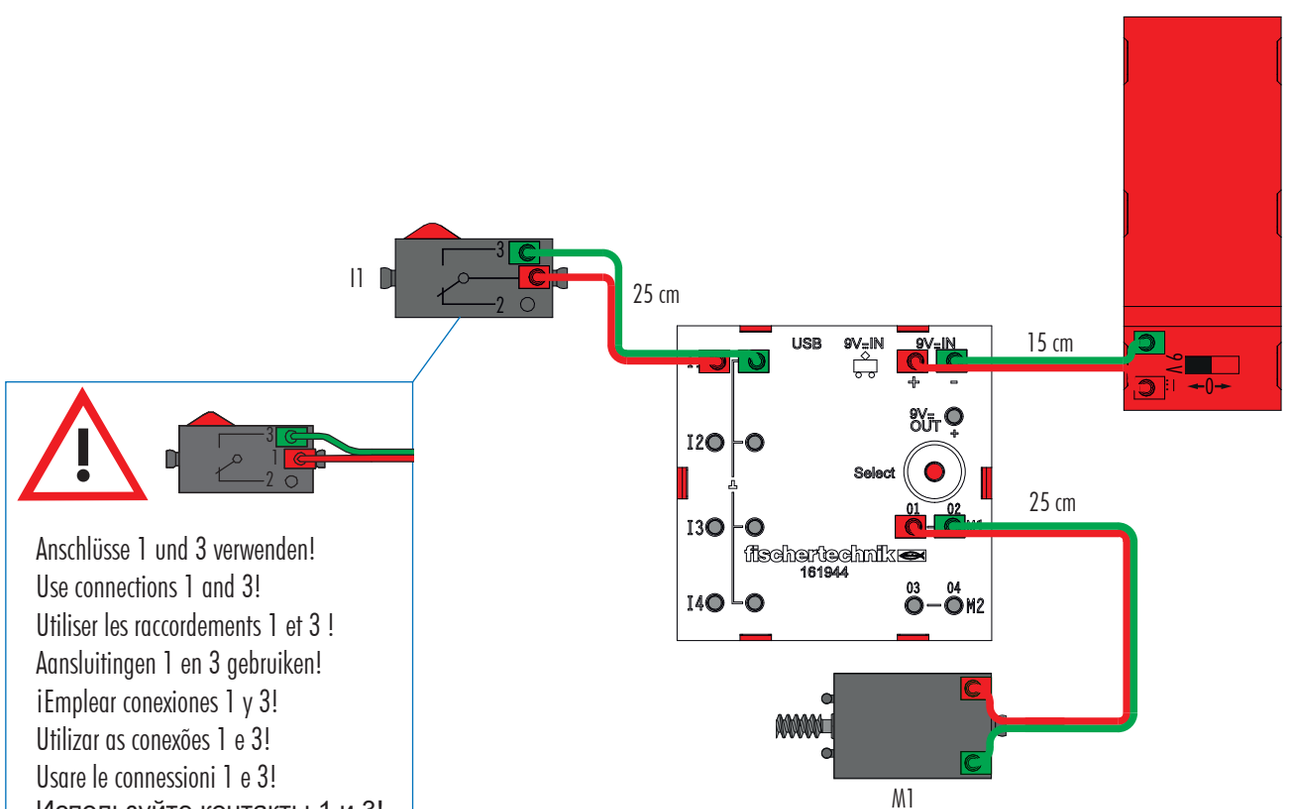

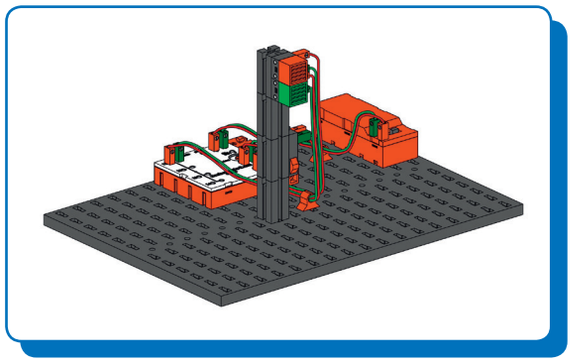

Fußgängerampel
Pedestrian light
Feu de signalisation pour piétons
Voetgangersstoplicht
Semáforo para peatones
Semáforo para pedestres
Semaforo pedonale
Светофор для пешеходов
行人交通信号灯

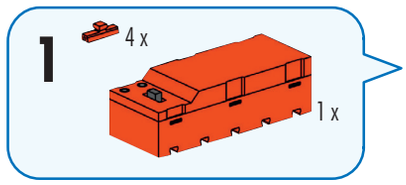

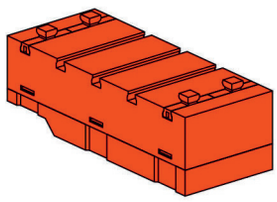

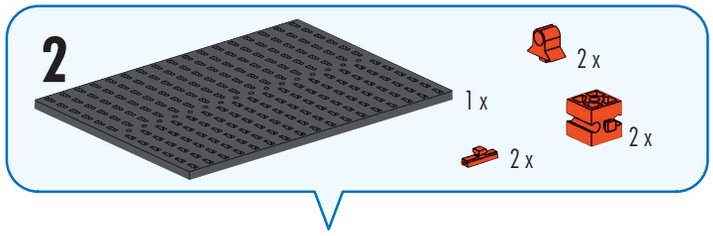

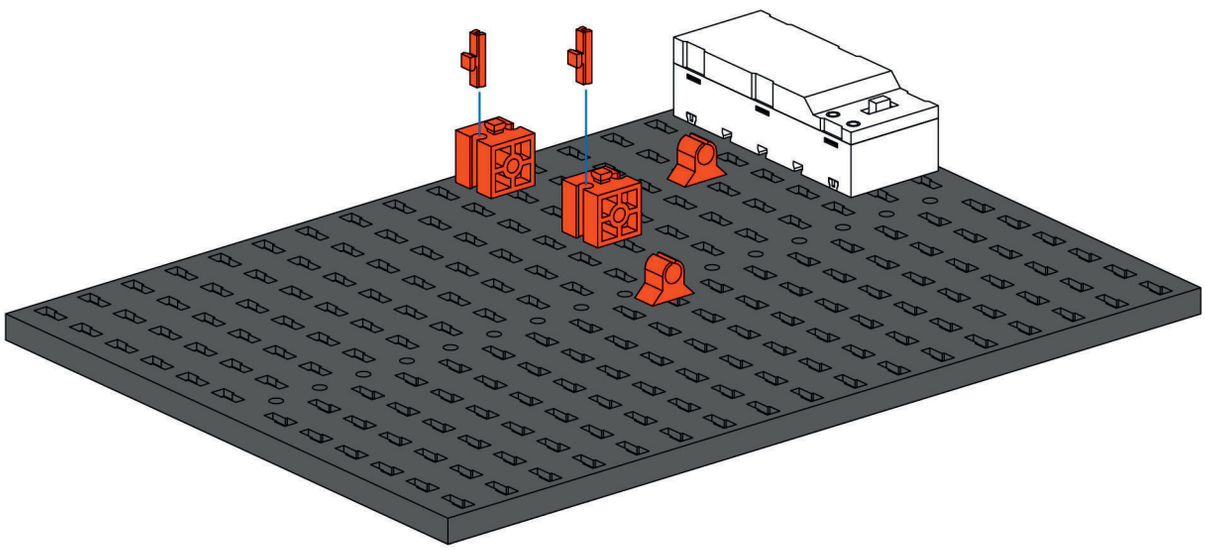

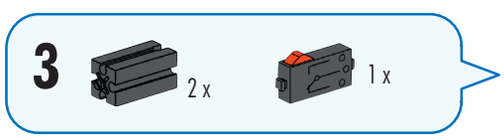

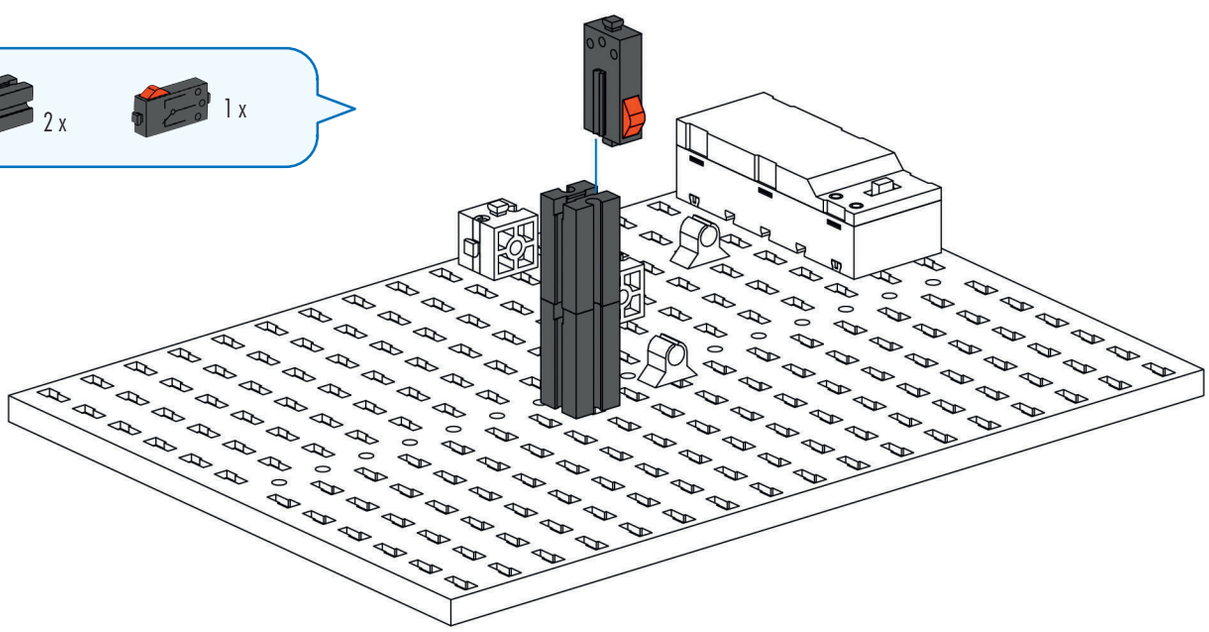

887

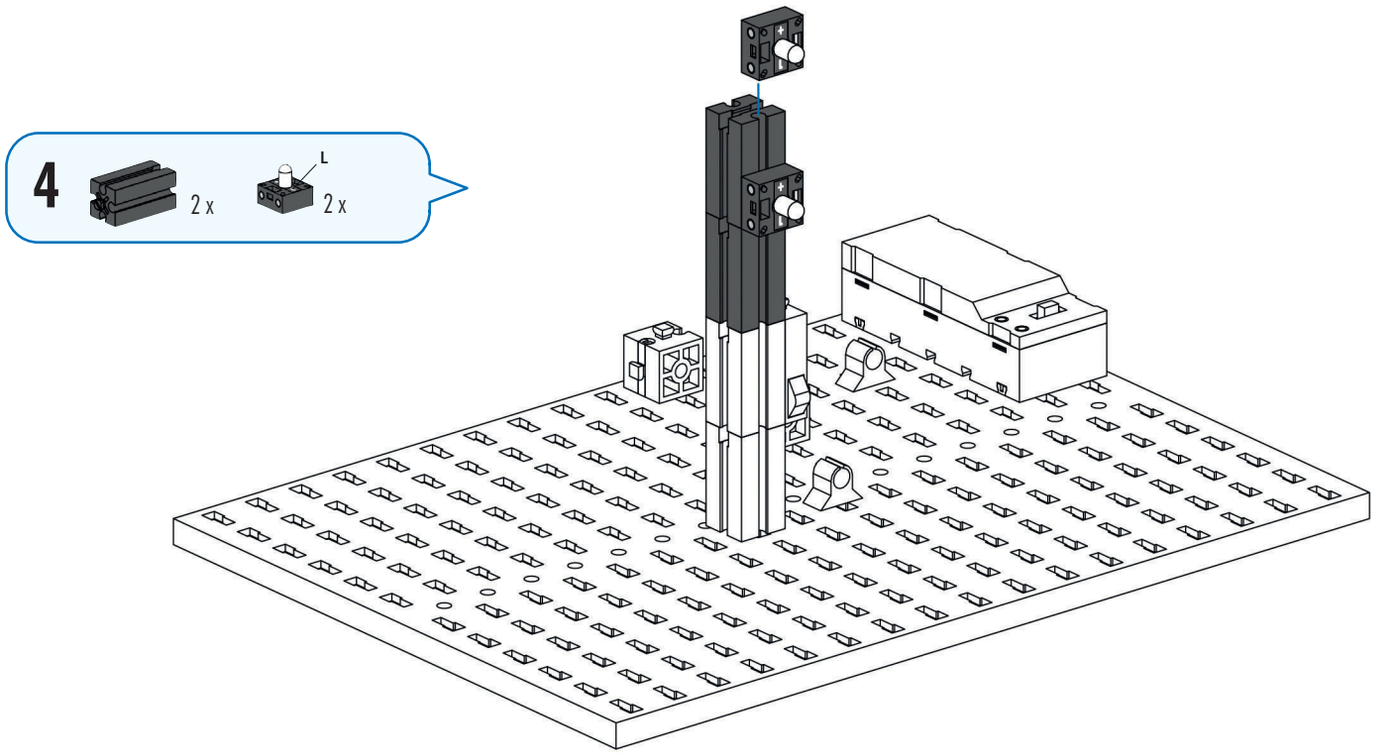
4
2 x
L
2 x

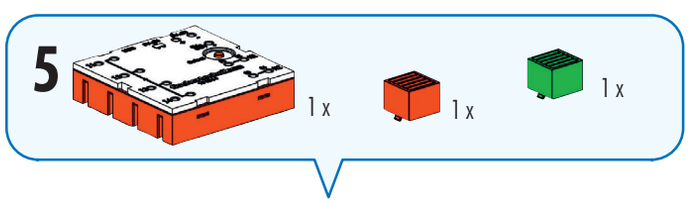
5
1 x
1 x
1 x

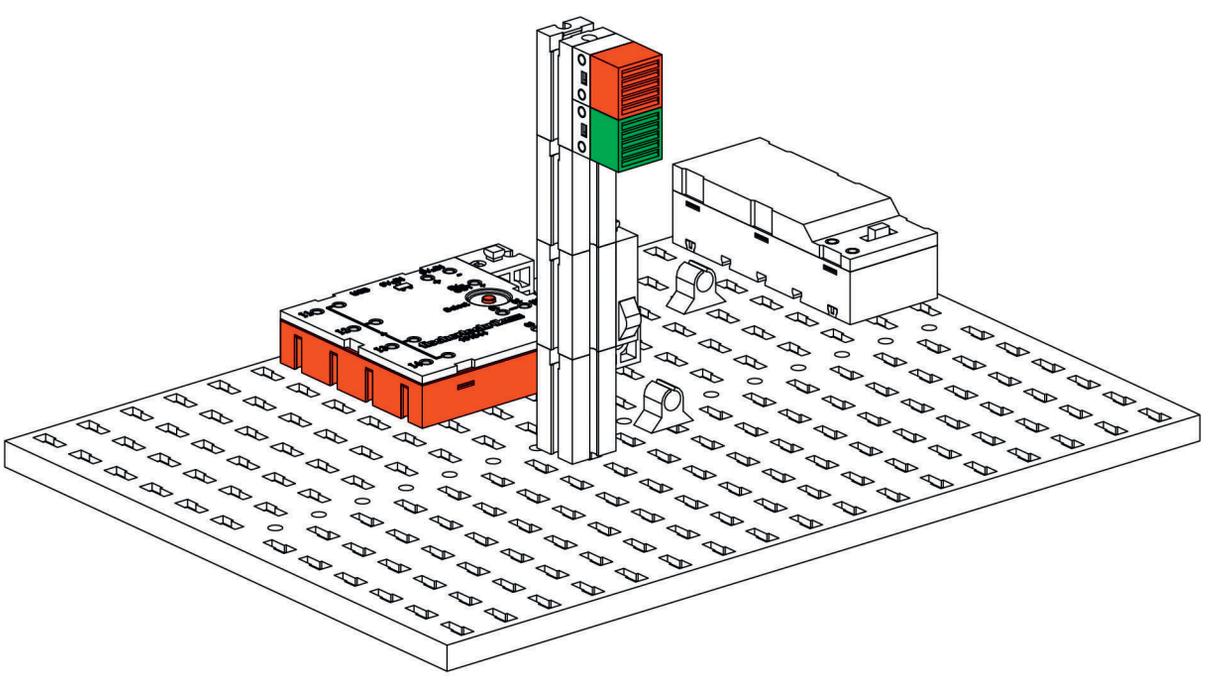

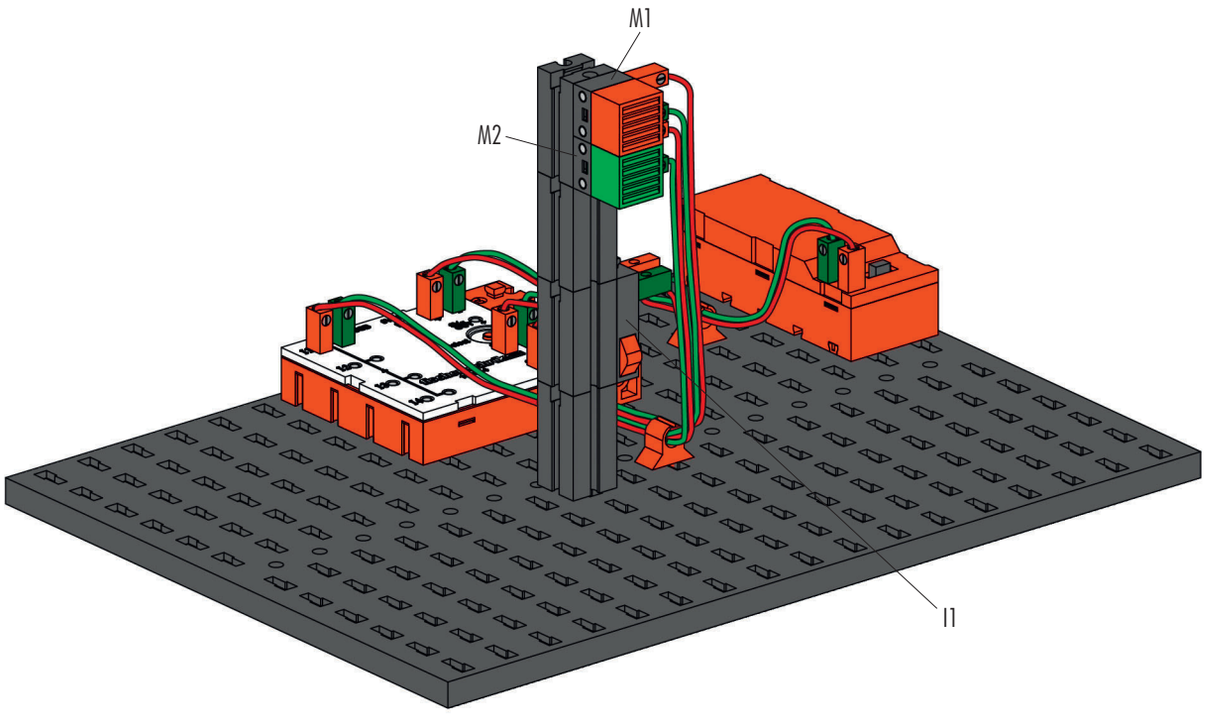

Schaltplan
Circuit diagram
Plan électrique

Schakelschema
Diagrama de circuitos
Plano elétrico de ligação

Schema elettrico
Схема подключения
电路图

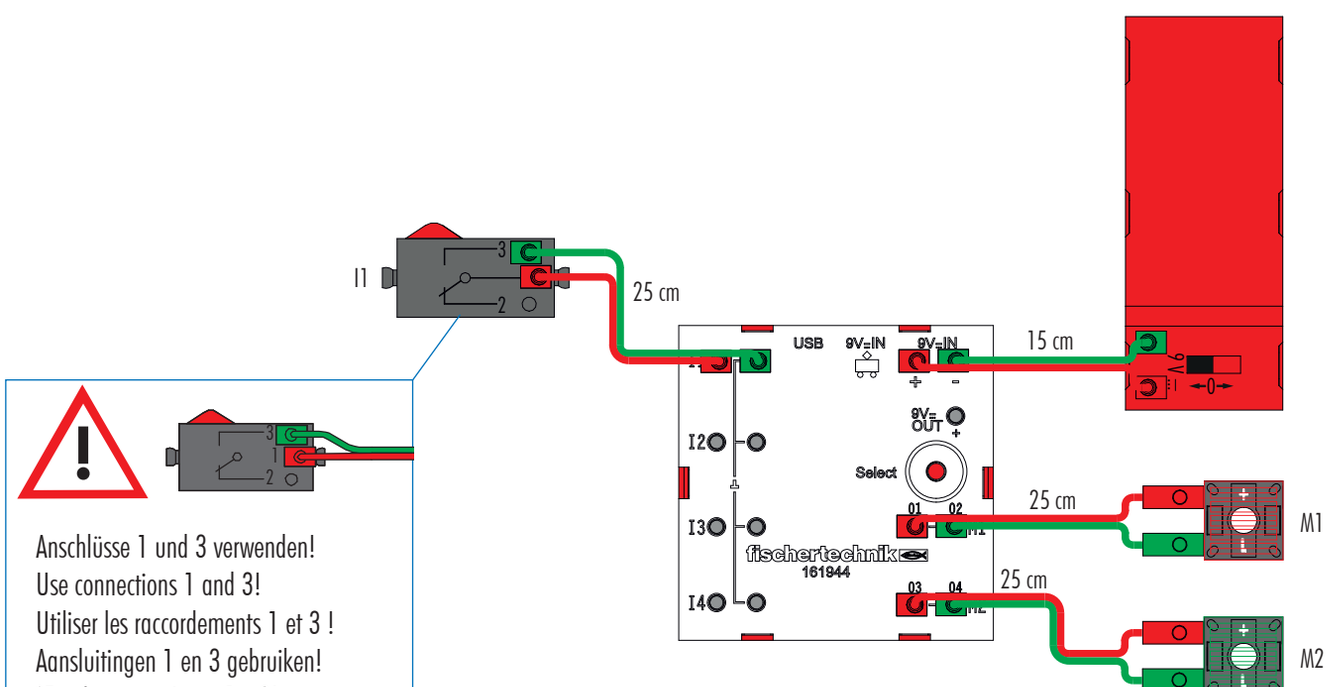

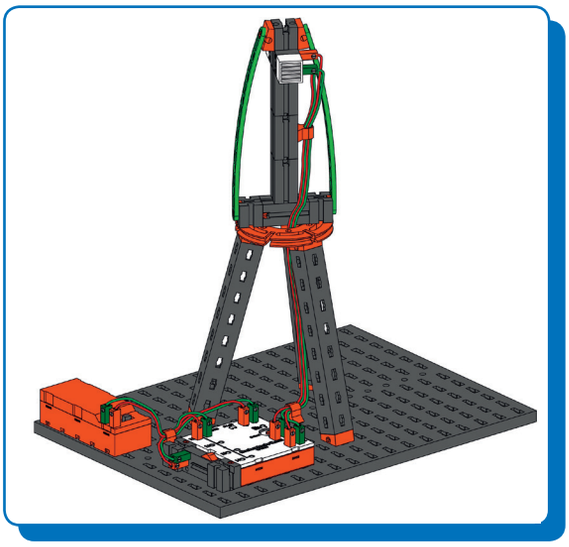

Leuchtturm mit Blinklicht
Lighthouse with blinking light
Phare à feu clignotant
Vuurtoren met knipperlicht
Faro con luz intermitente
Torre de iluminação com luz intermitente
Faro con luce lampeggiante
Маяк с мигающим светом
带闪光信号灯的灯塔

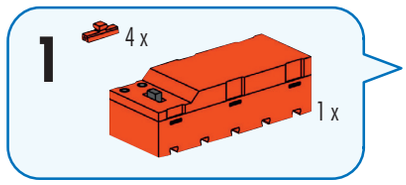

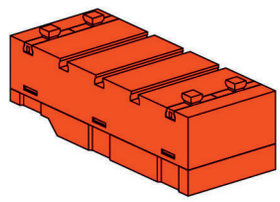

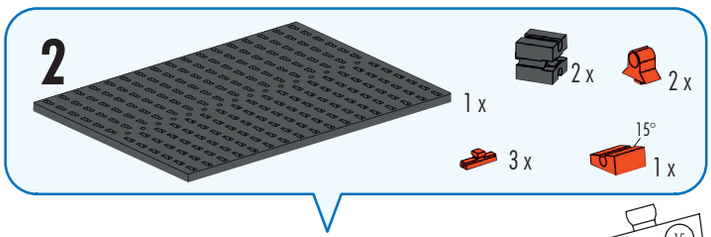

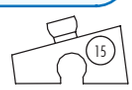

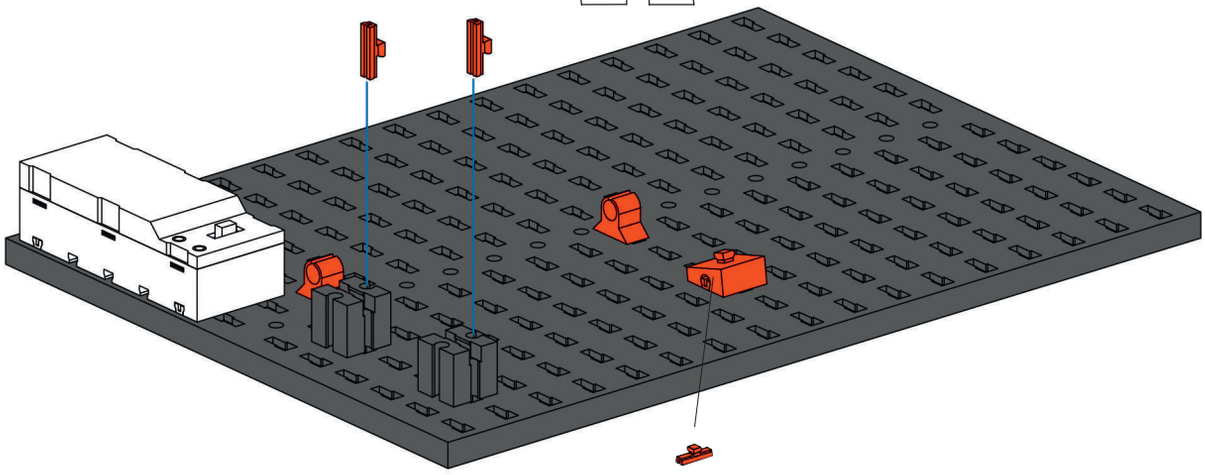

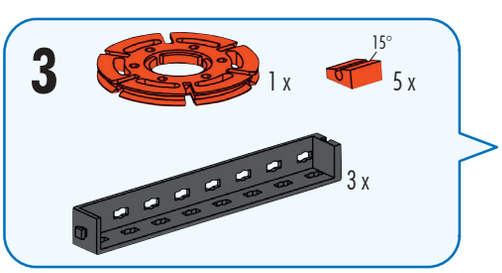

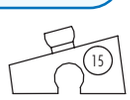

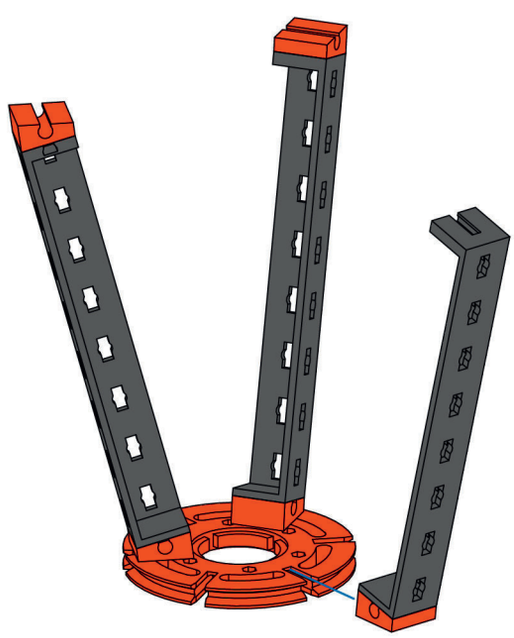

4
2 x
1 x
1 x
1 x

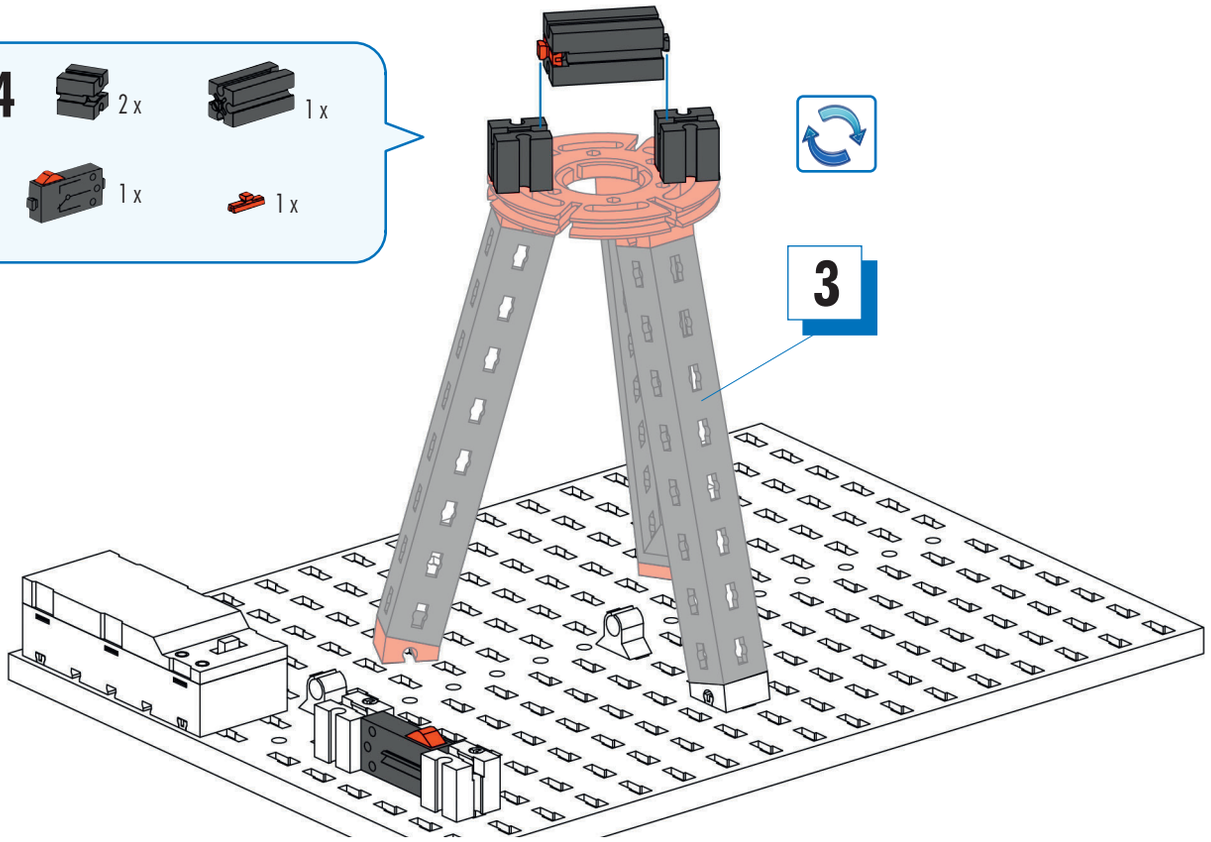
3

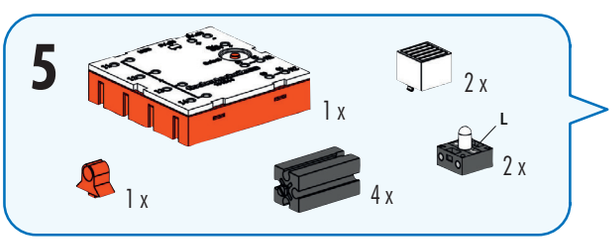
5
1 x
2 x
L
2 x
1 x
4 x

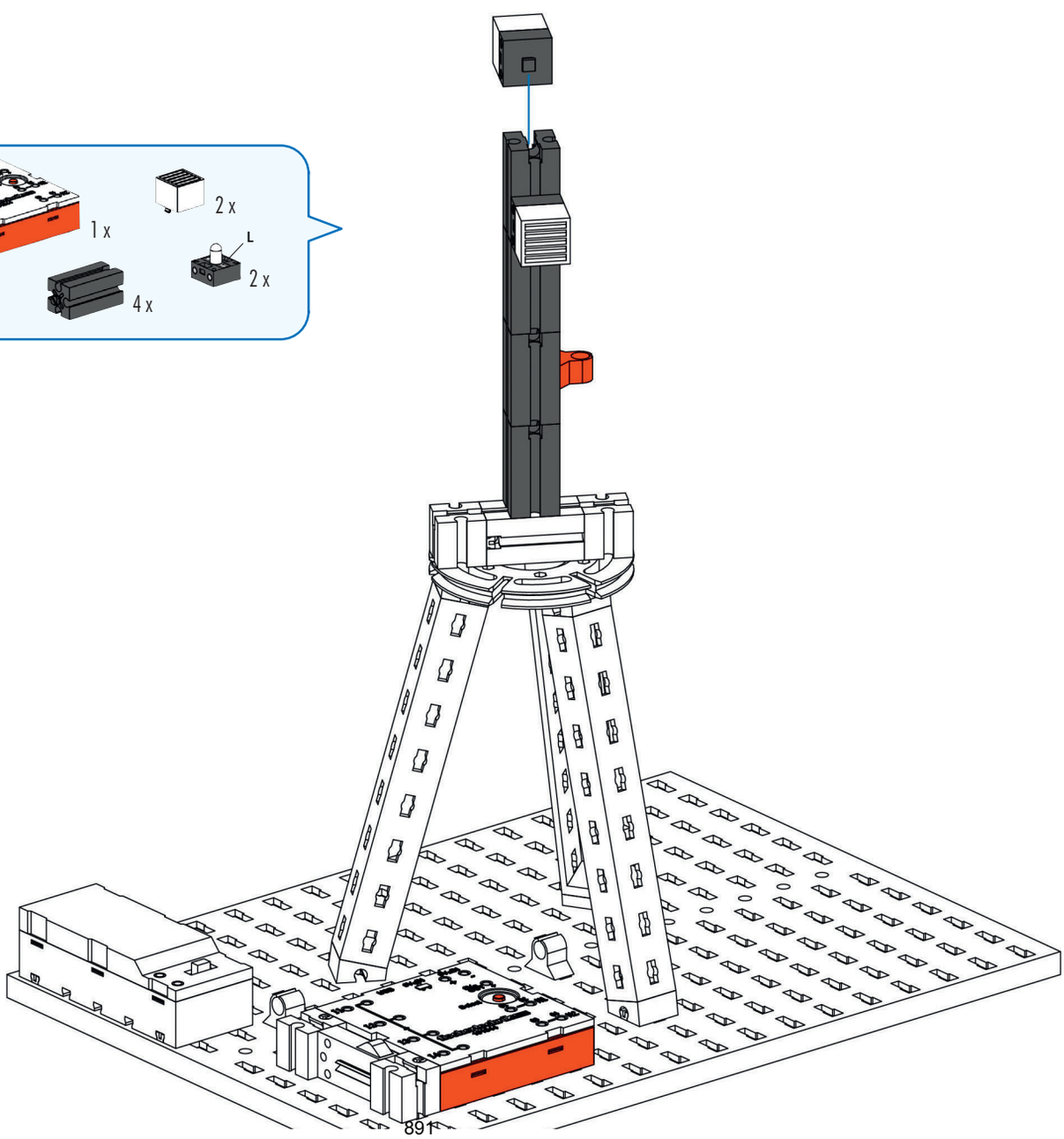
891

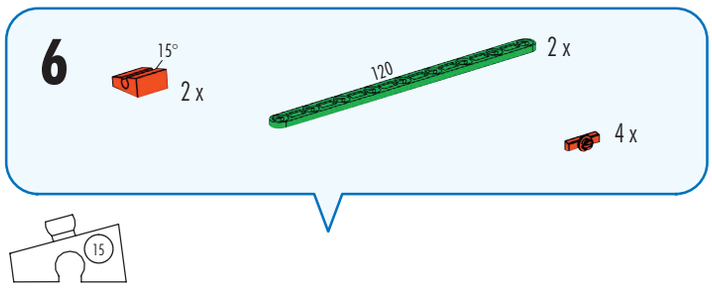
6
15°
2 x
120
2 x
4 x
15

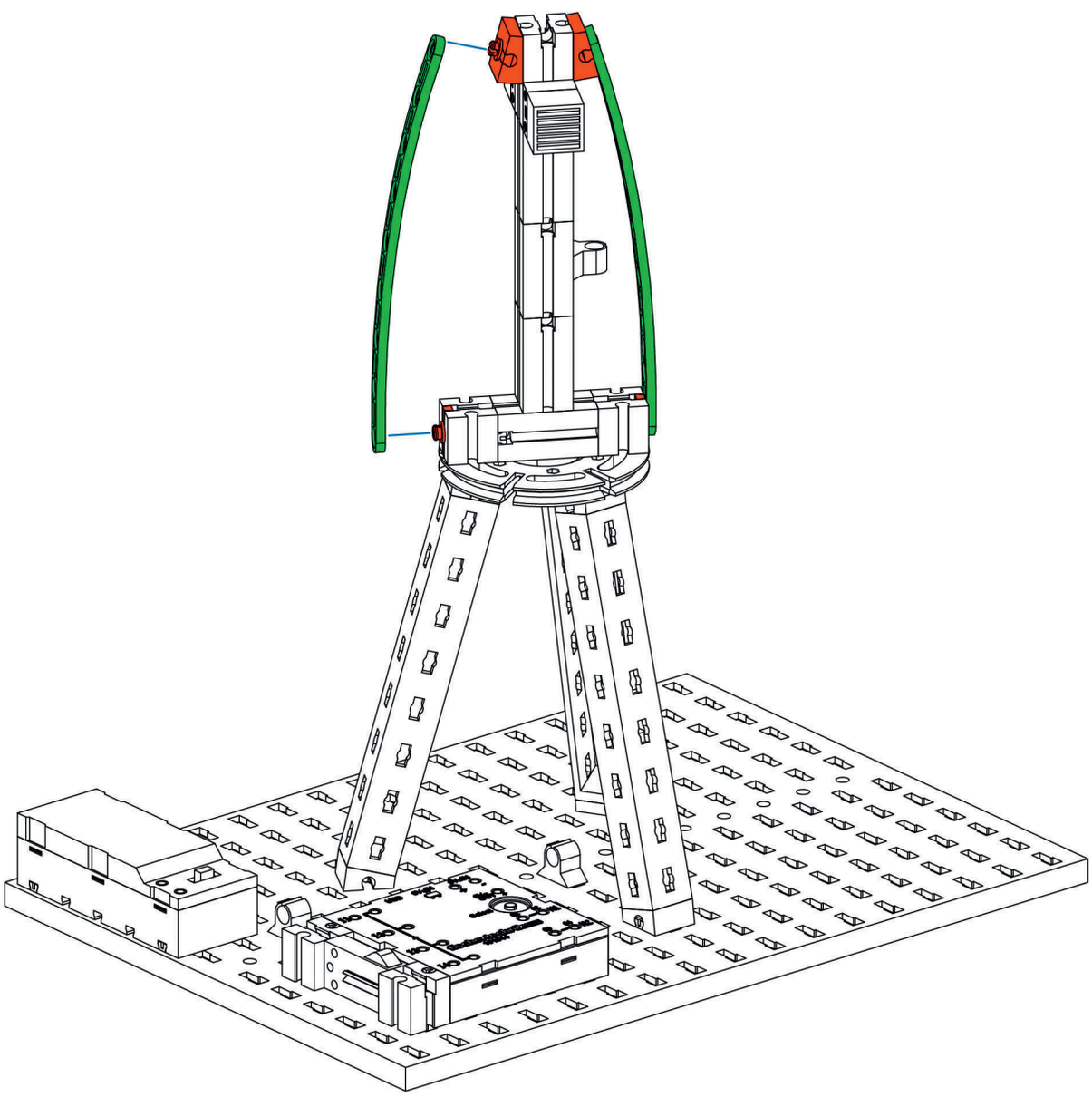

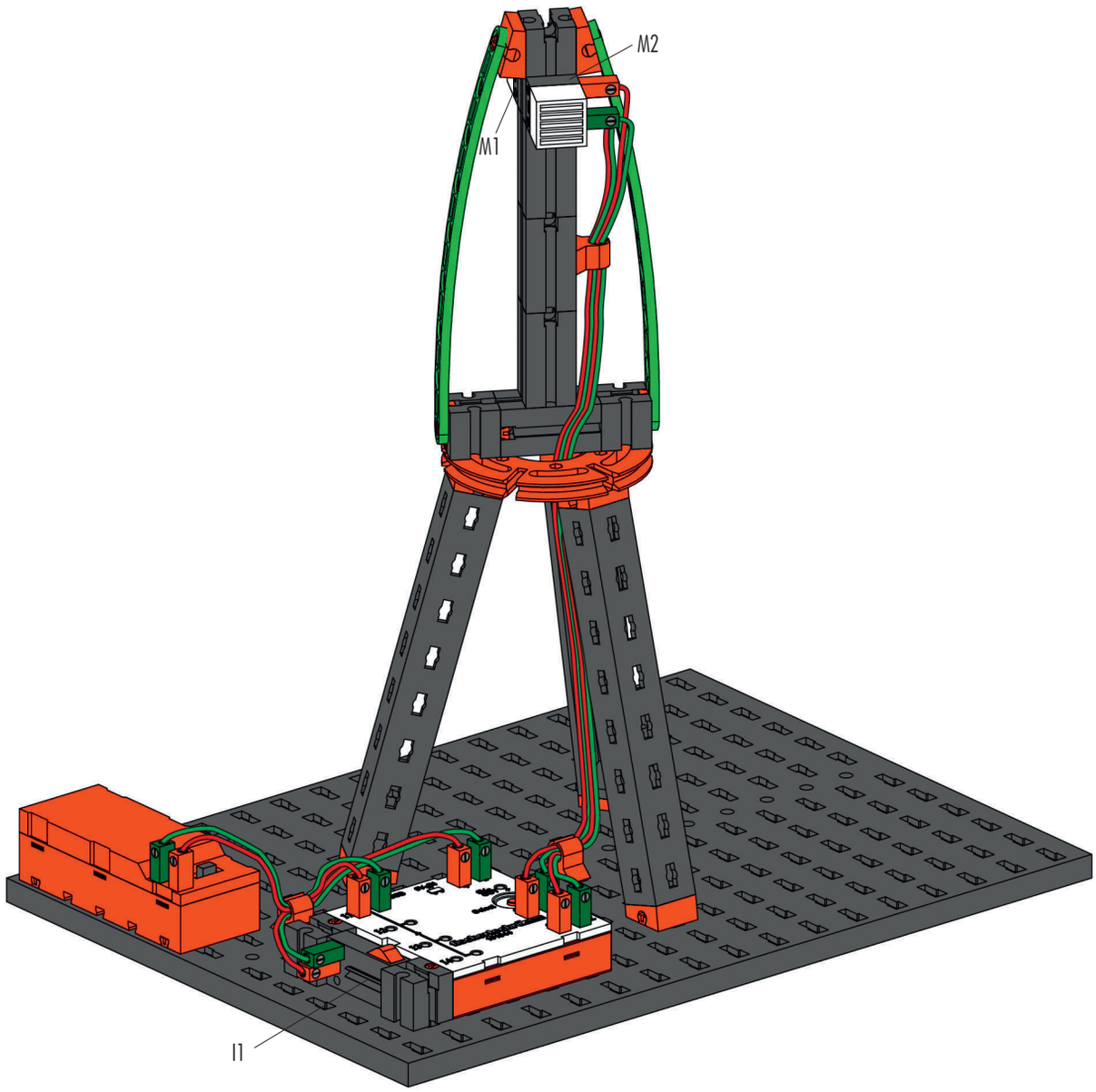

Schaltplan
Circuit diagram
Plan électrique

Schakelschema
Diagrama de circuitos
Plano elétrico de ligação

Schema elettrico
Схема подключения
电路图

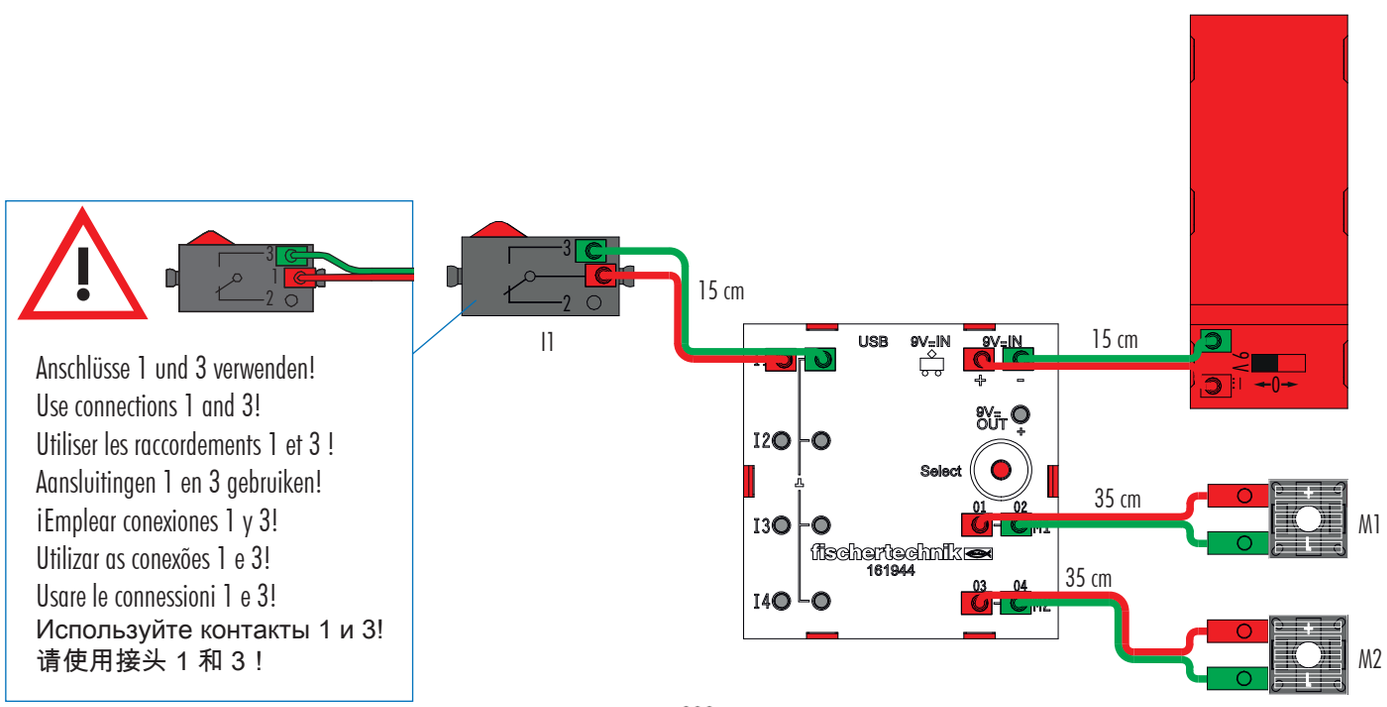

893

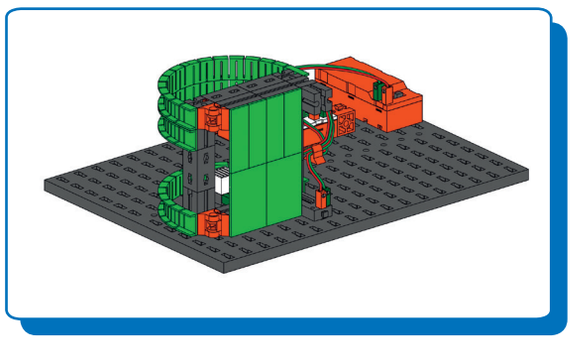

Kühlschrank
Refrigerator
Réfrigérateur

Koelkast
Nevera
Refrigerador

Frigorifero
Холодильник
冰箱

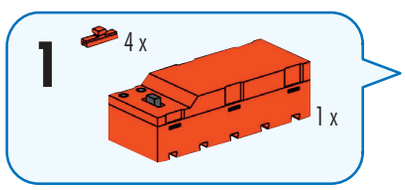

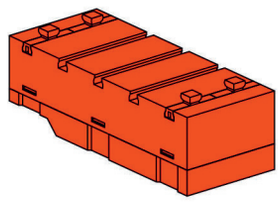

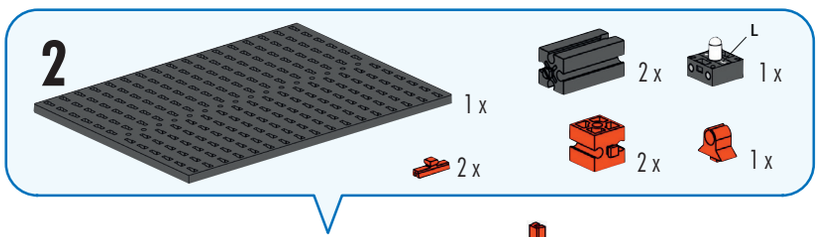

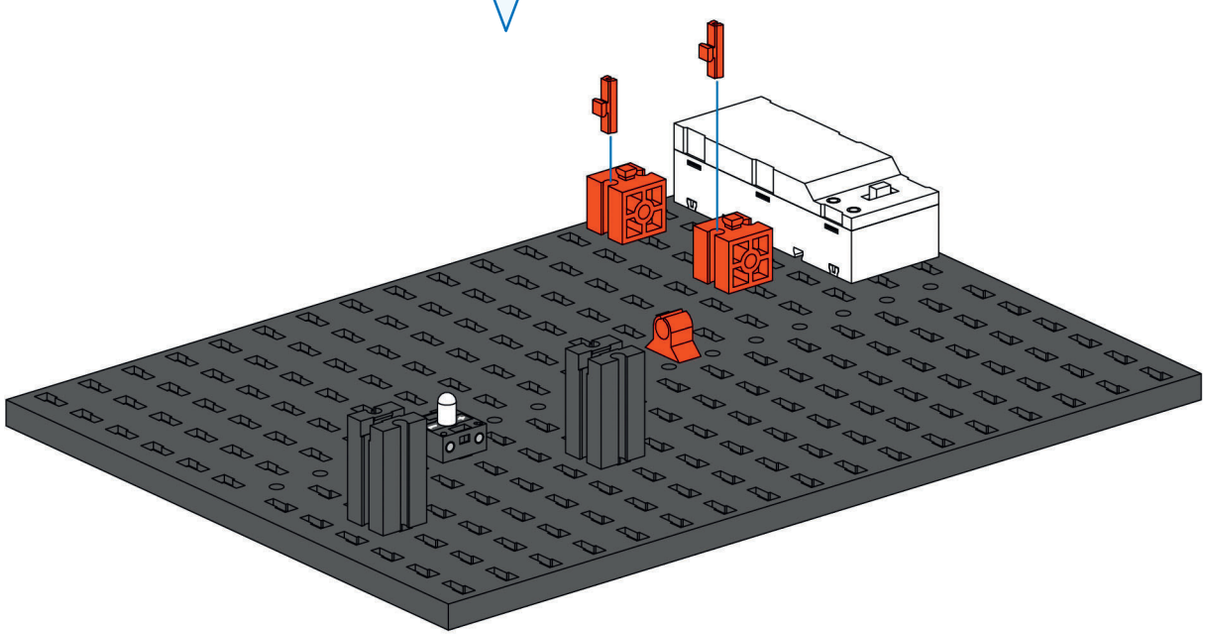

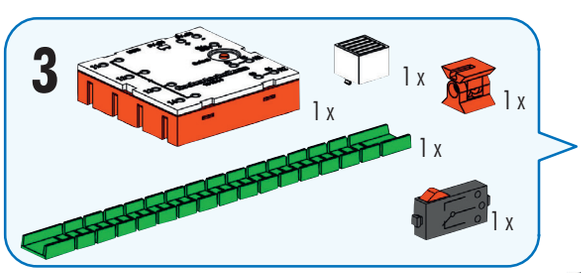

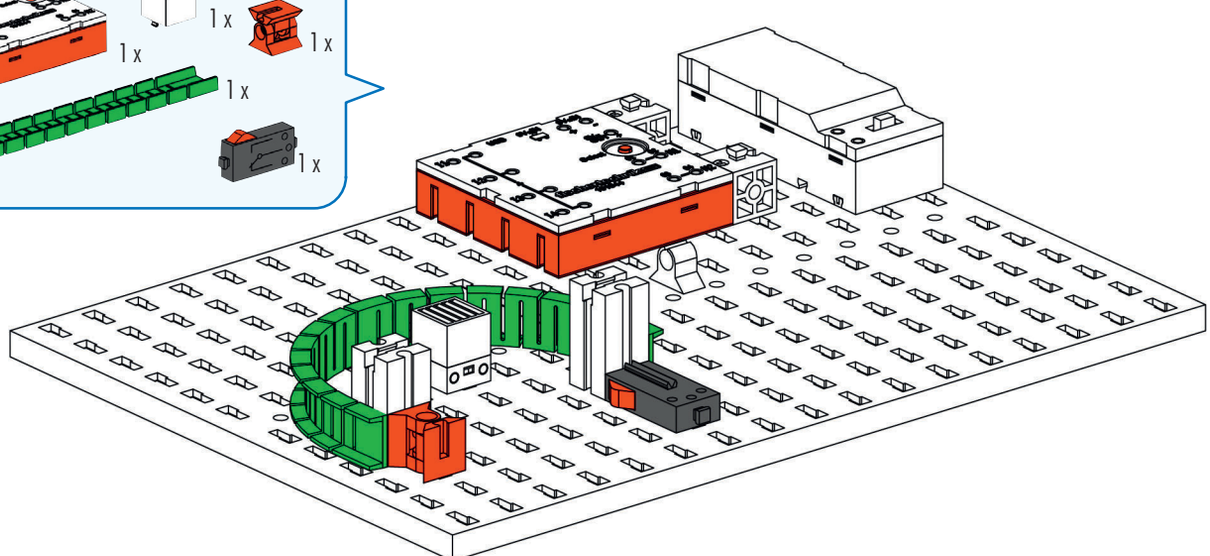

894

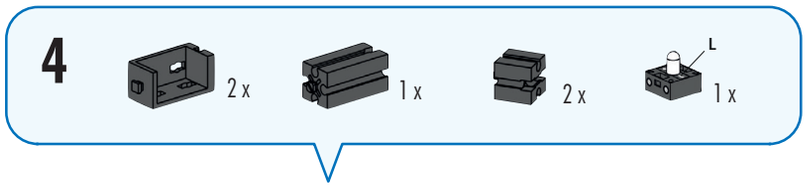
4
2 x
1 x
2 x
L
1 x

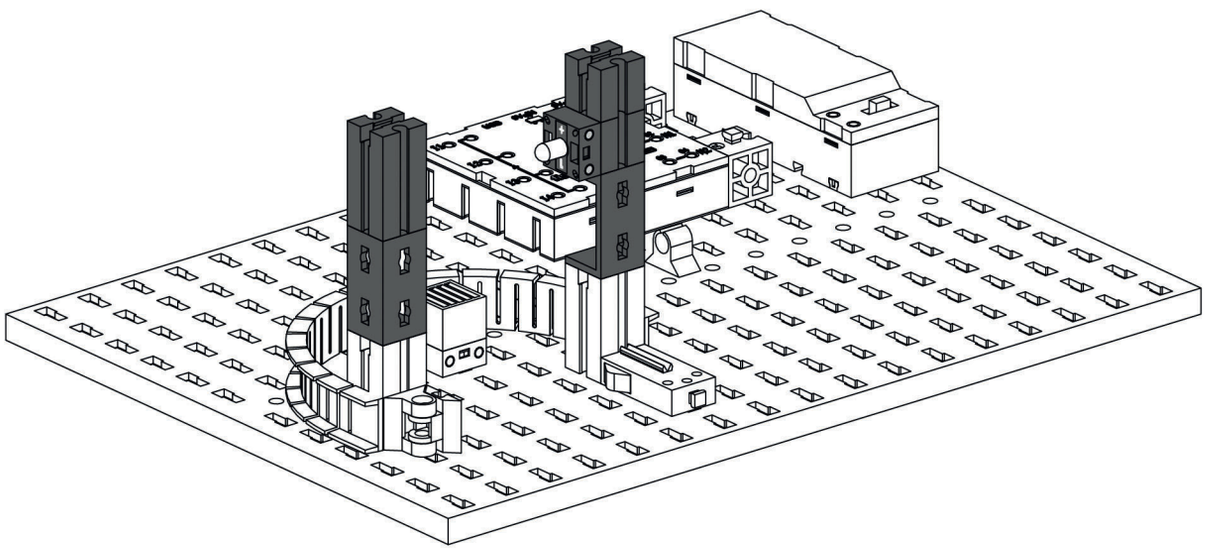

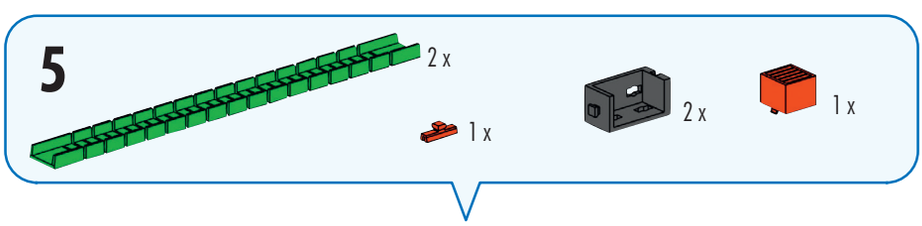
5
2 x
1 x
2 x
1 x

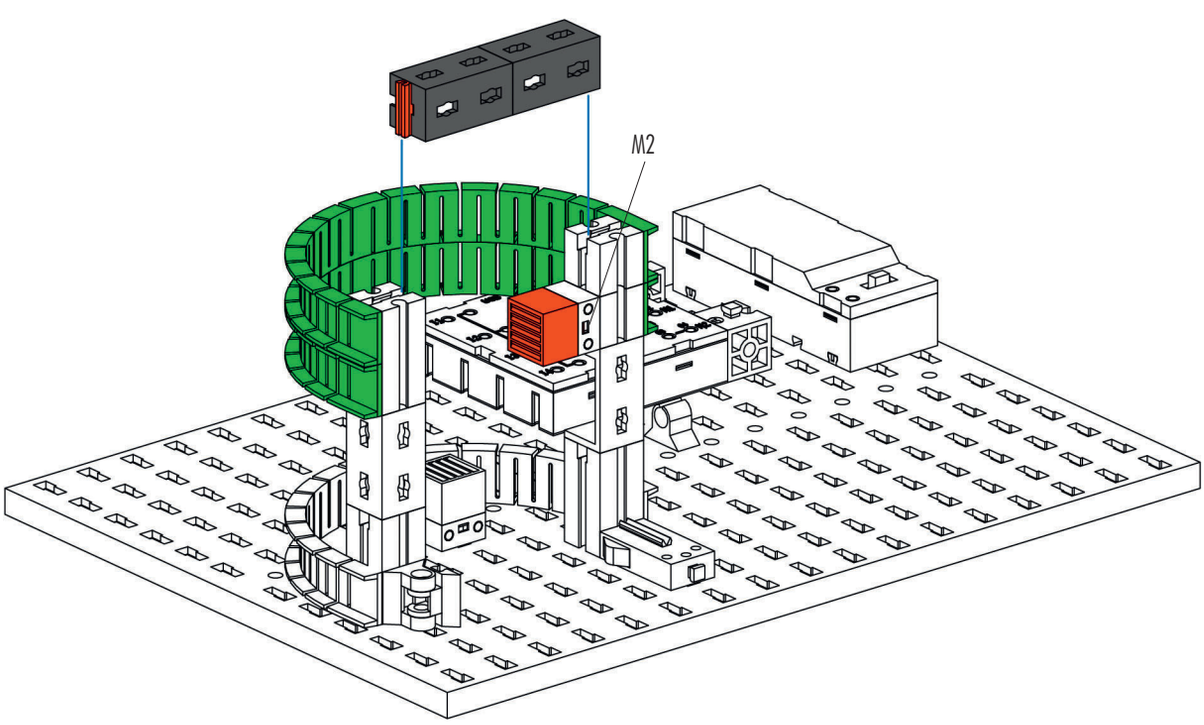
M2

6

2 x

4 x

2 x

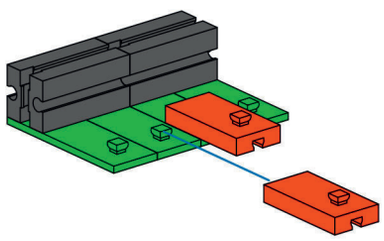

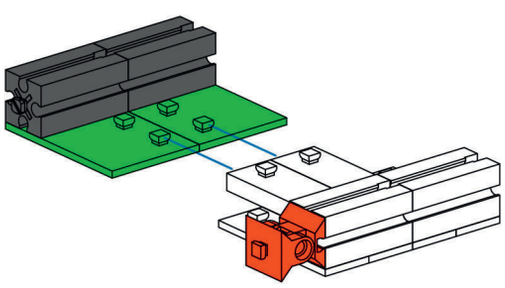

7

2 x

2 x

1 x

8

2 x

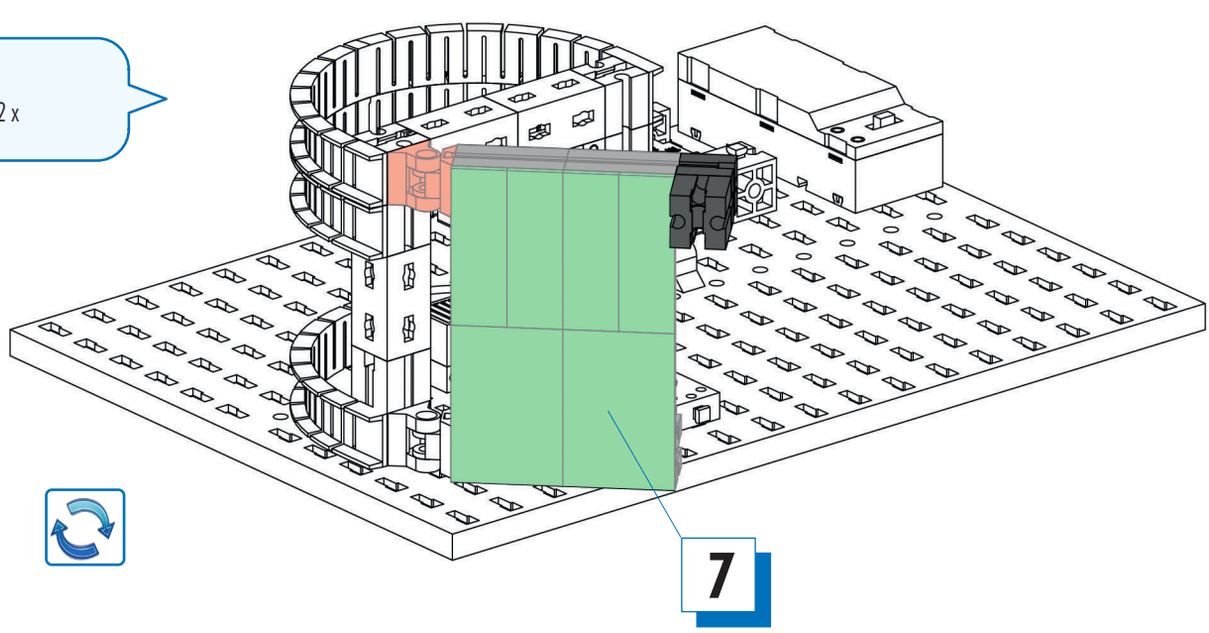

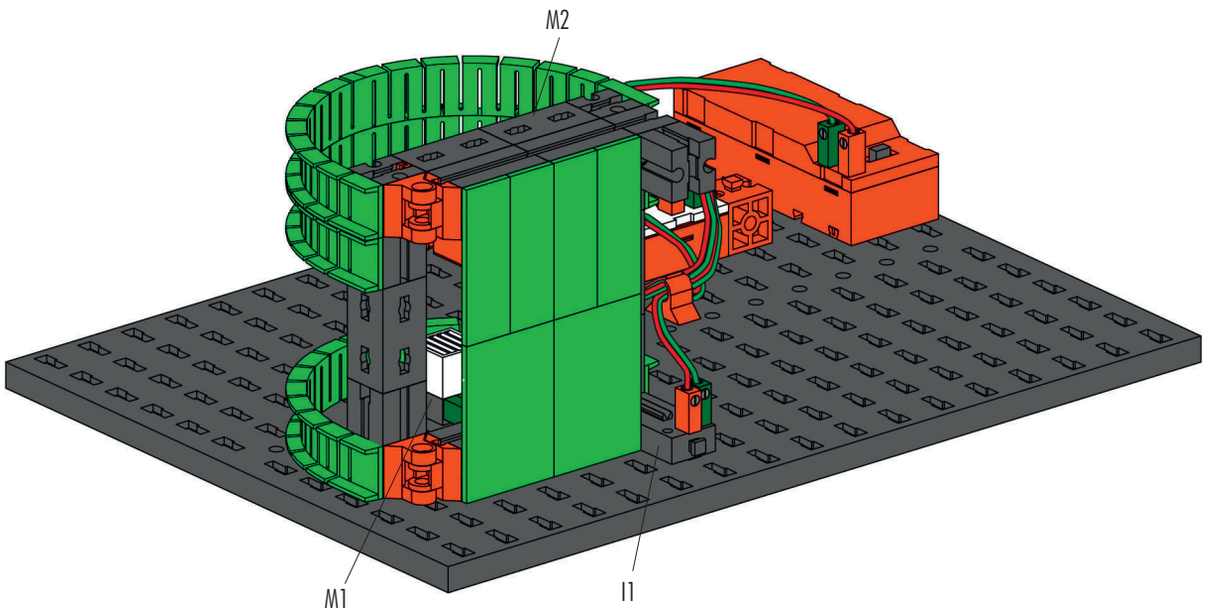

Schaltplan
Circuit diagram
Plan électrique

Schakelschema
Diagrama de circuitos
Plano elétrico de ligação

Schema elettrico
Схема подключения
电路图

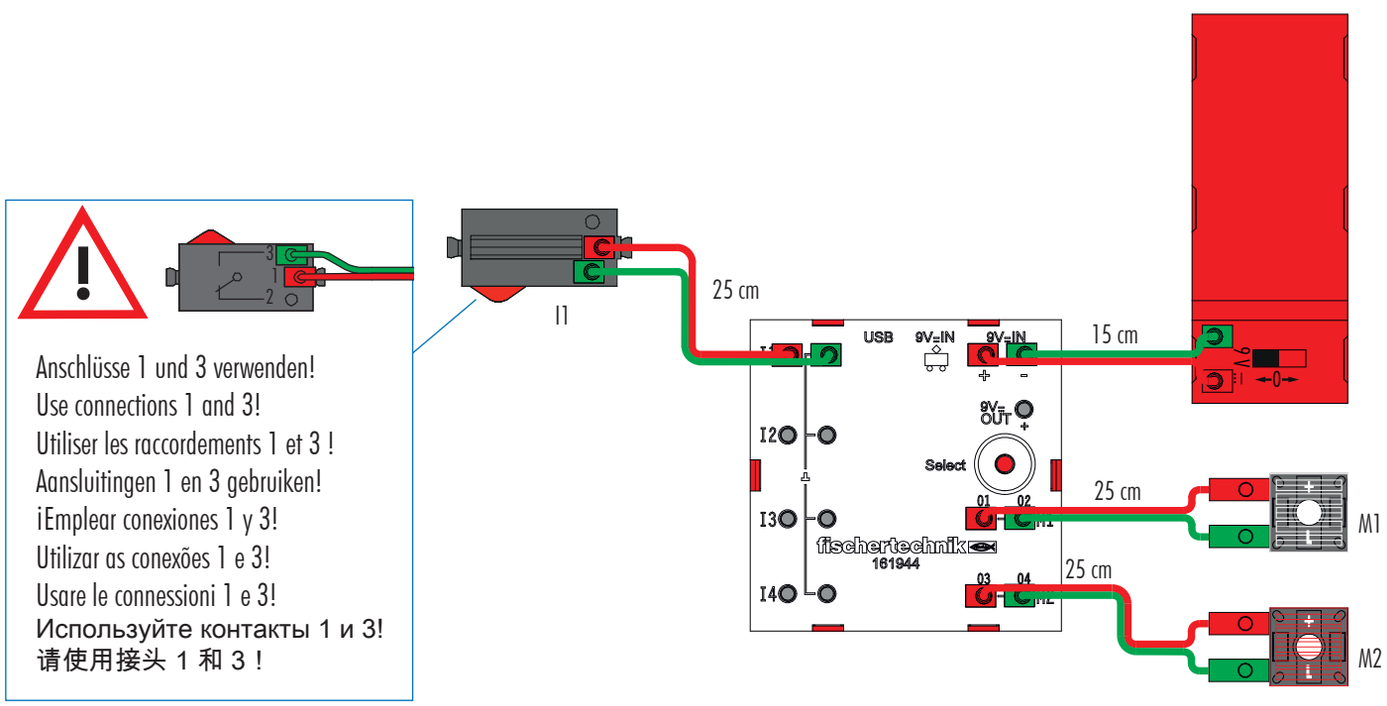

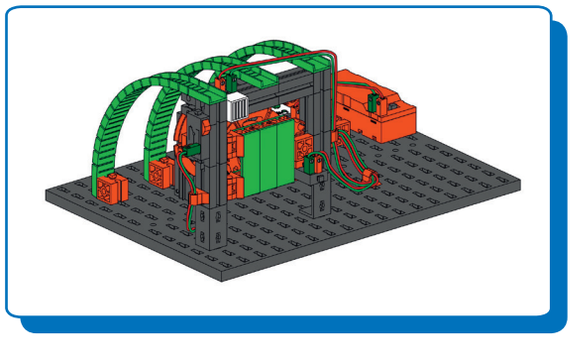

Waschmaschine
Washing machine
Lave-linge
Wasmachine
Lavadora
Máquina de lavar roupa
Lavatrice
Стиральная машина
洗衣机

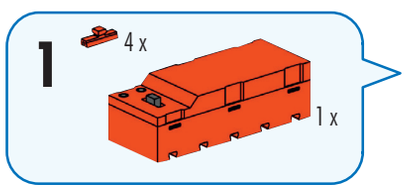

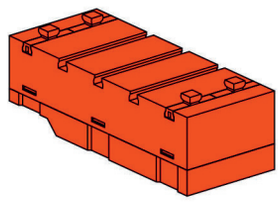

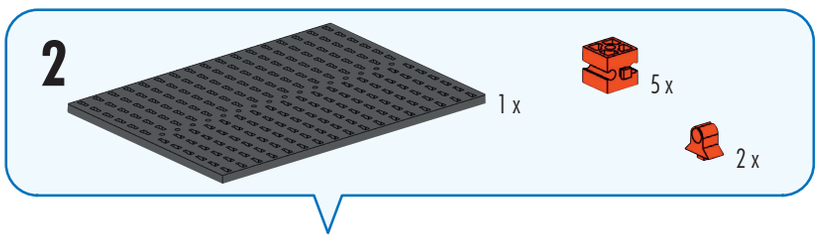

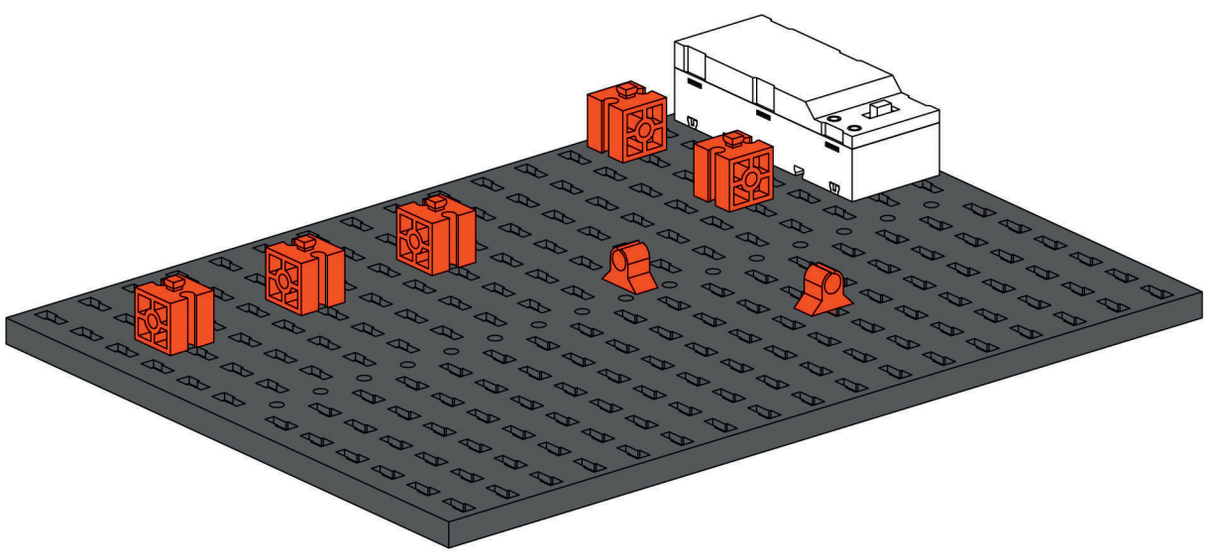

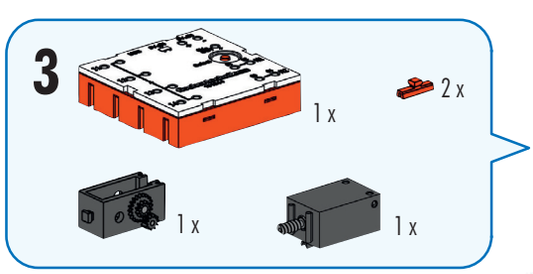

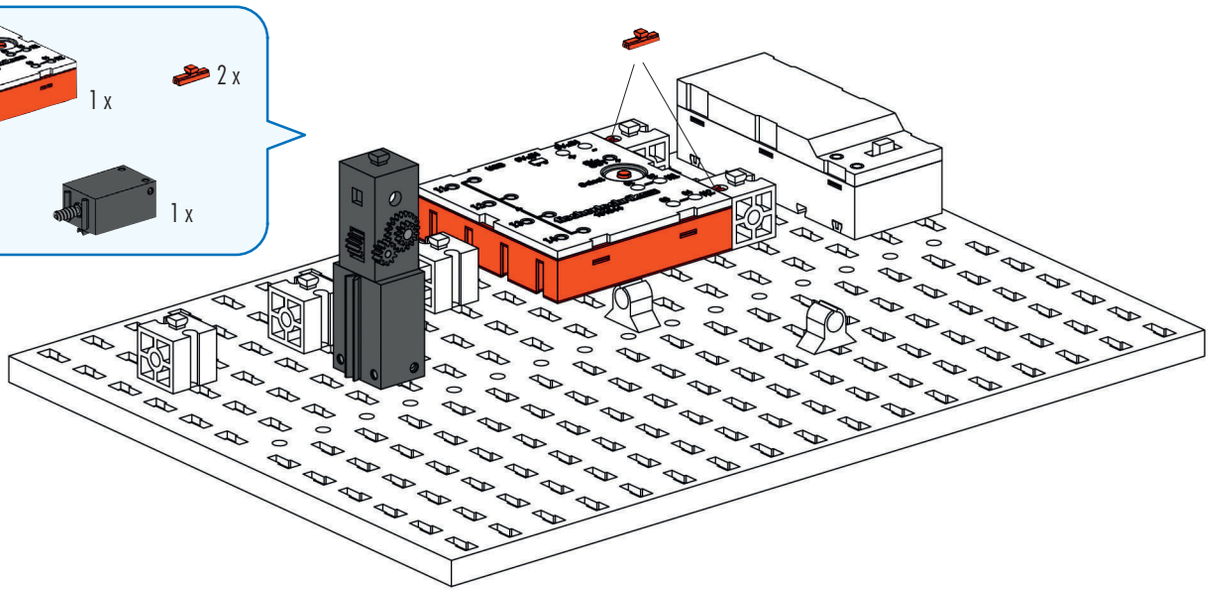

898

4 1 x 1 x 1 x 1 x

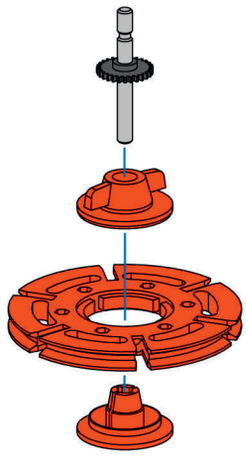

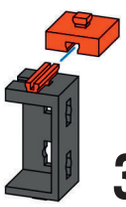

3 x

5 3 x 3 x 3 x

6 1 x

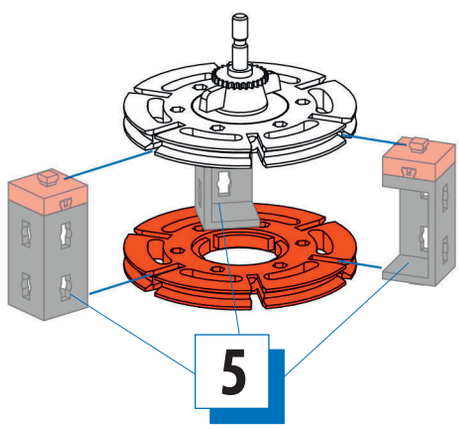

7 2 x 2 x 2 x

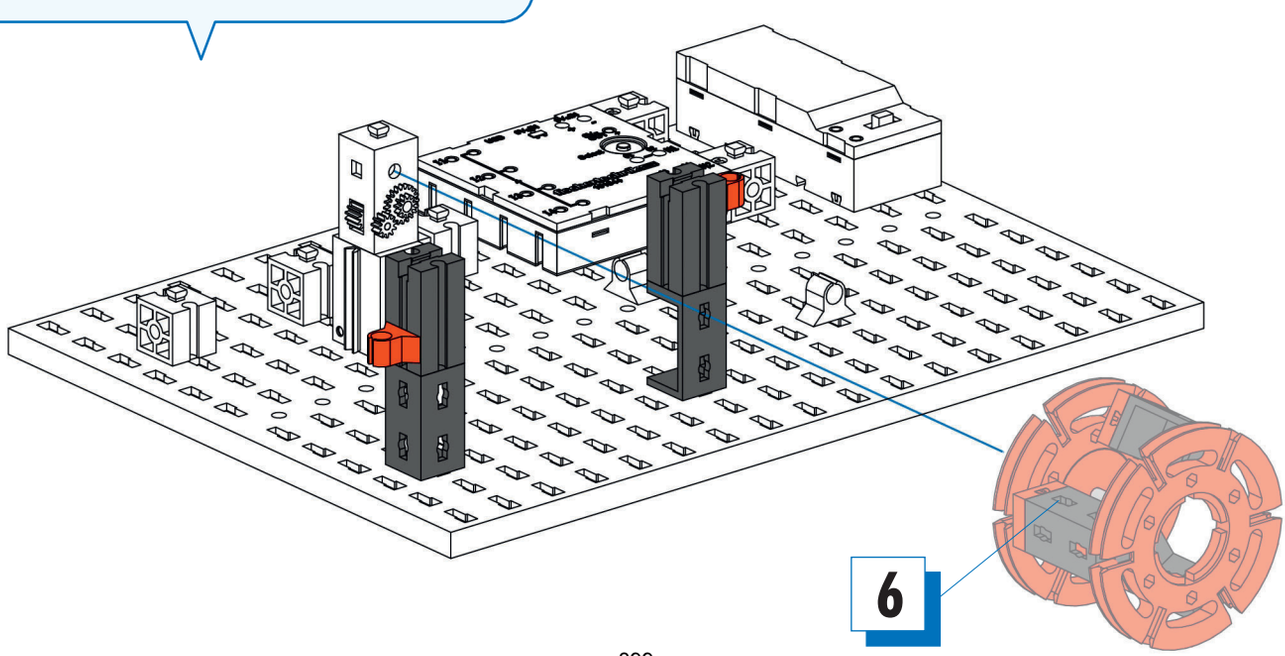

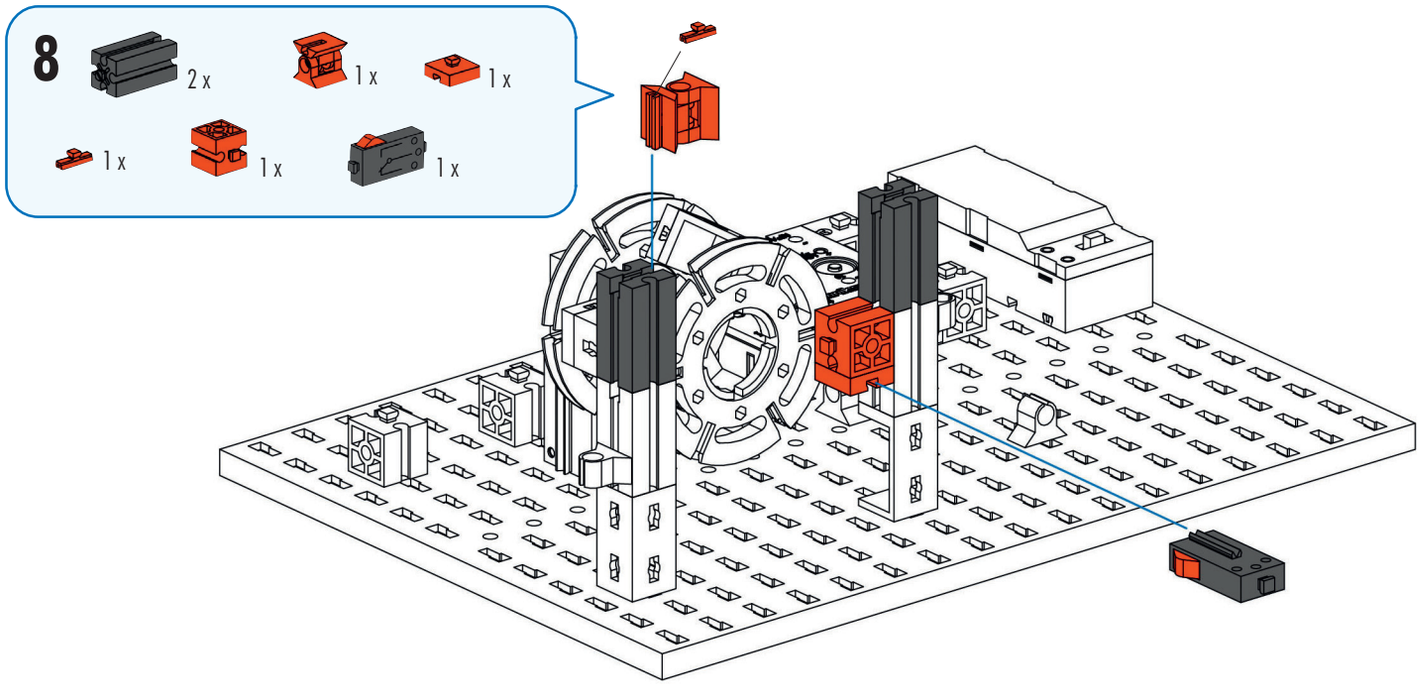
8
2 x
1 x
1 x
1 x
1 x
1 x

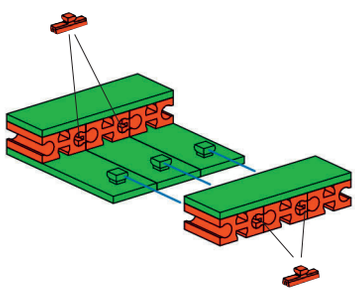

9
6 x
4 x
5 x

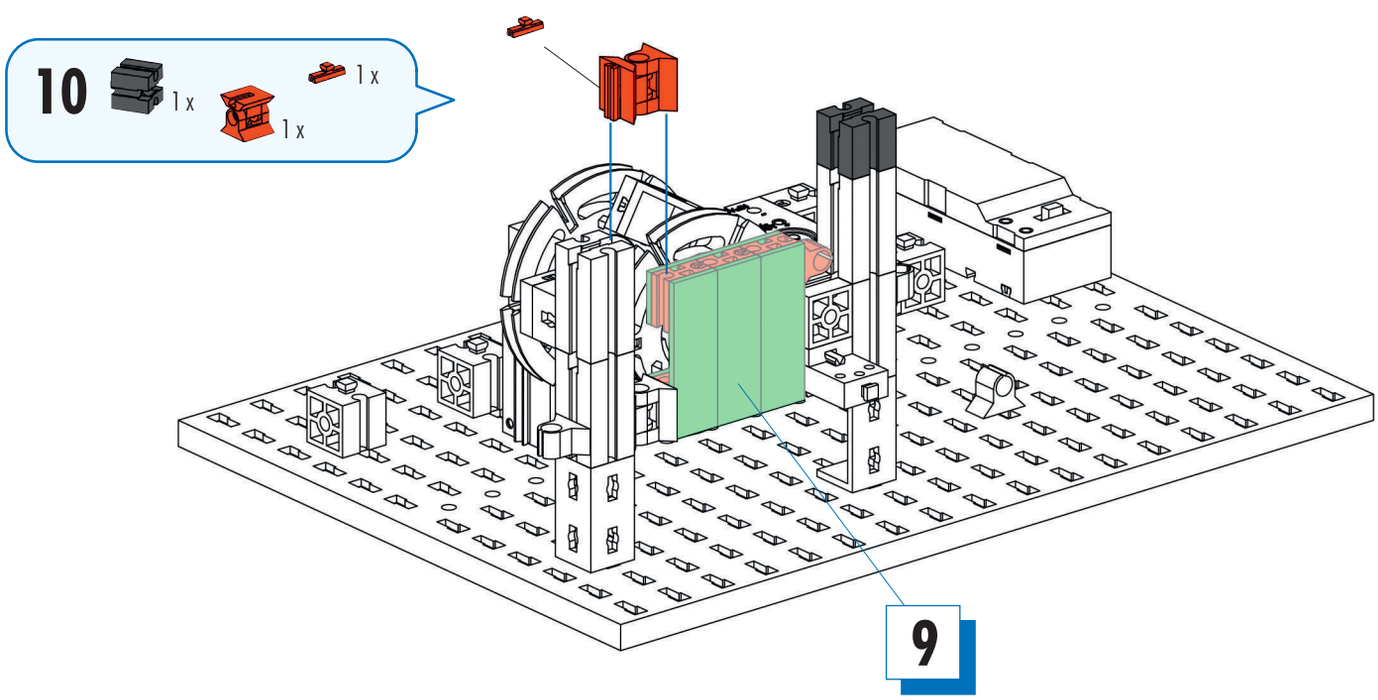
10
1 x
1 x
1 x
9

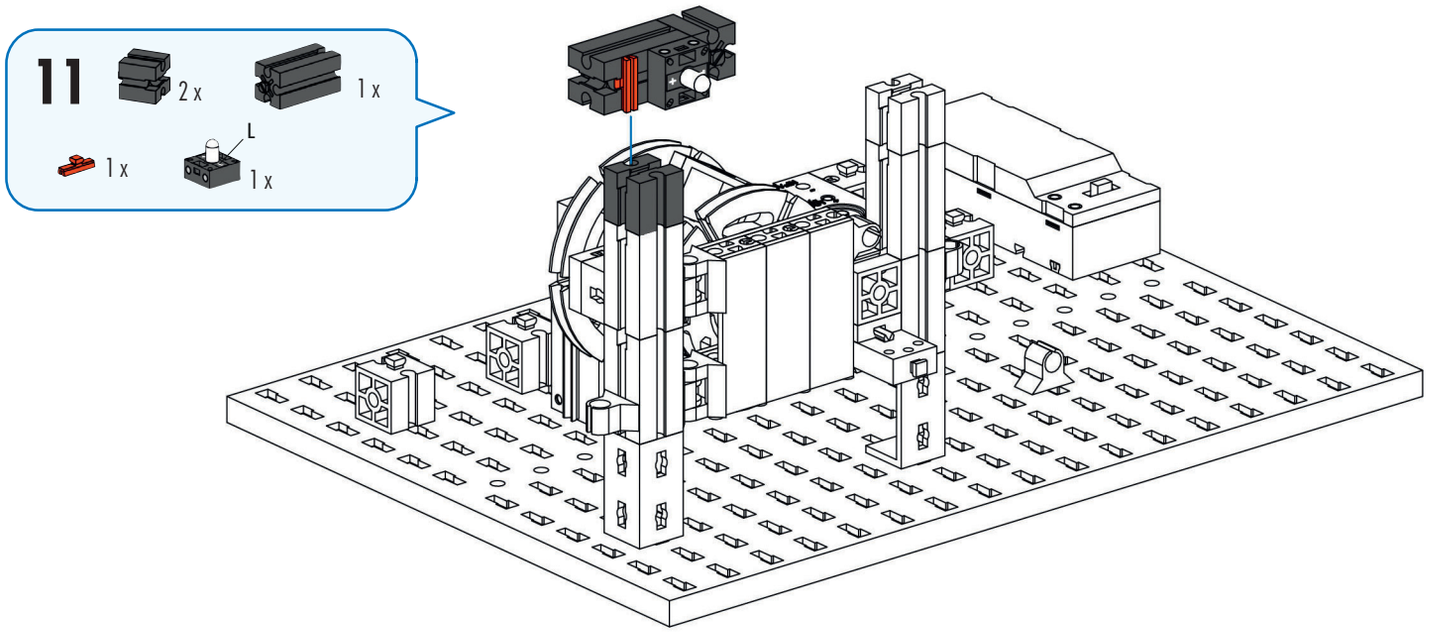
11
2 x
1 x
1 x
L
1 x

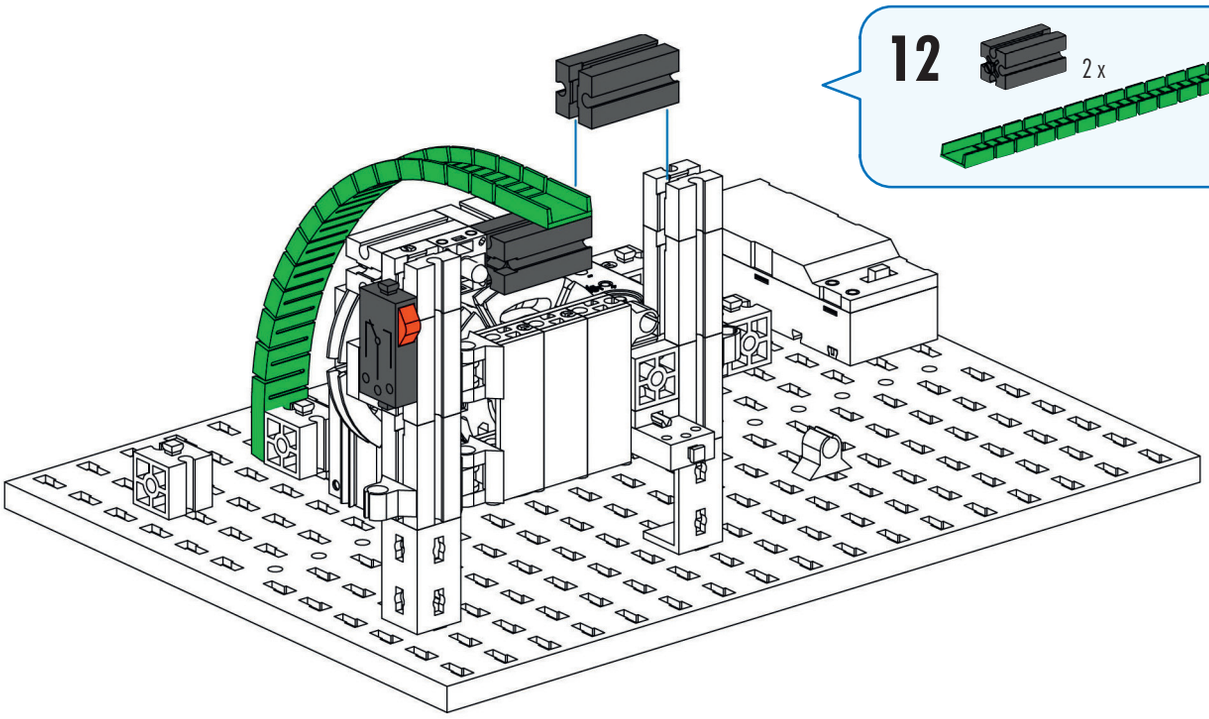
12
2 x
1 x
1 x

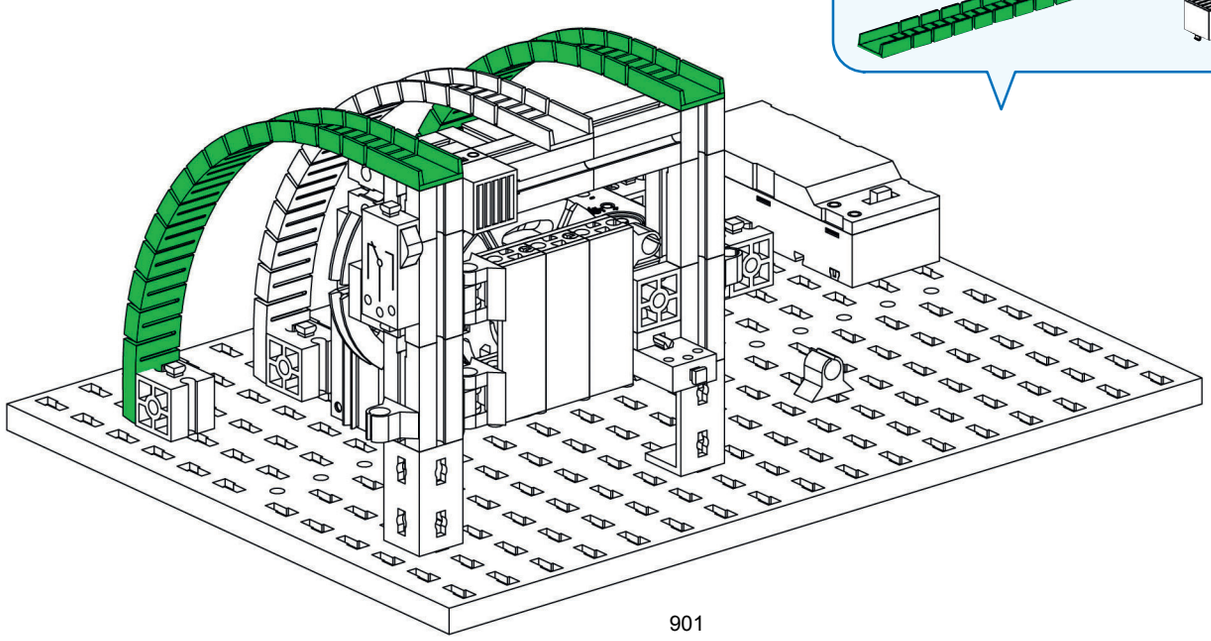
13
2 x
1 x

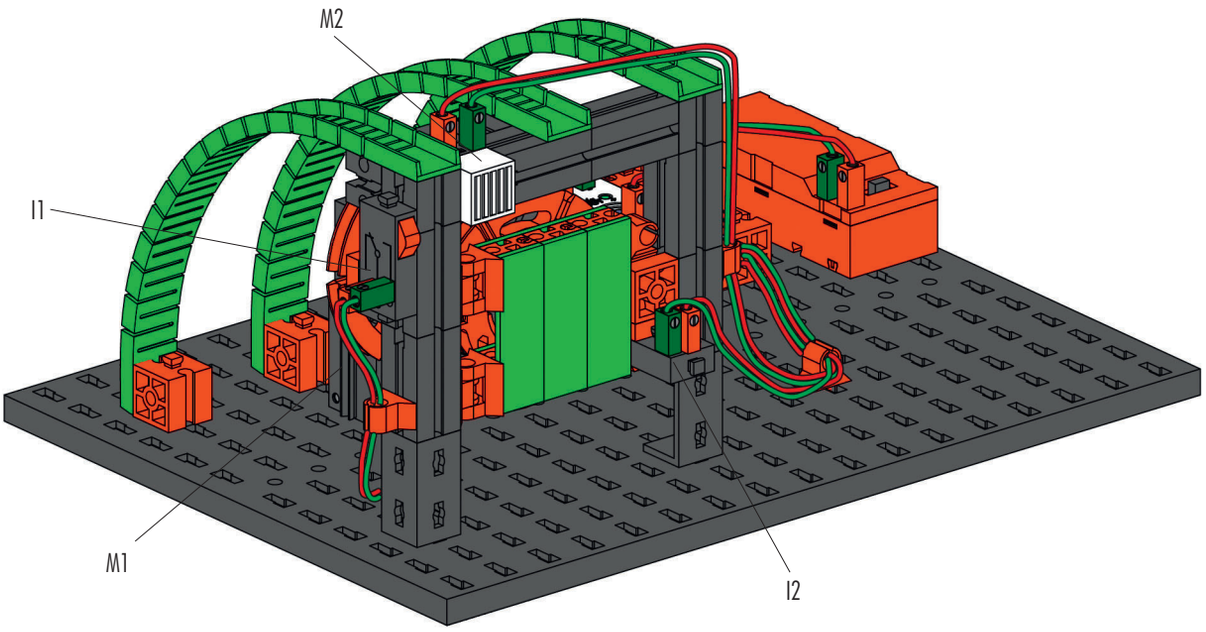

Schaltplan
Circuit diagram
Plan électrique

Schakelschema
Diagrama de circuitos
Plano elétrico de ligação

Schema elettrico
Схема подключения
电路图

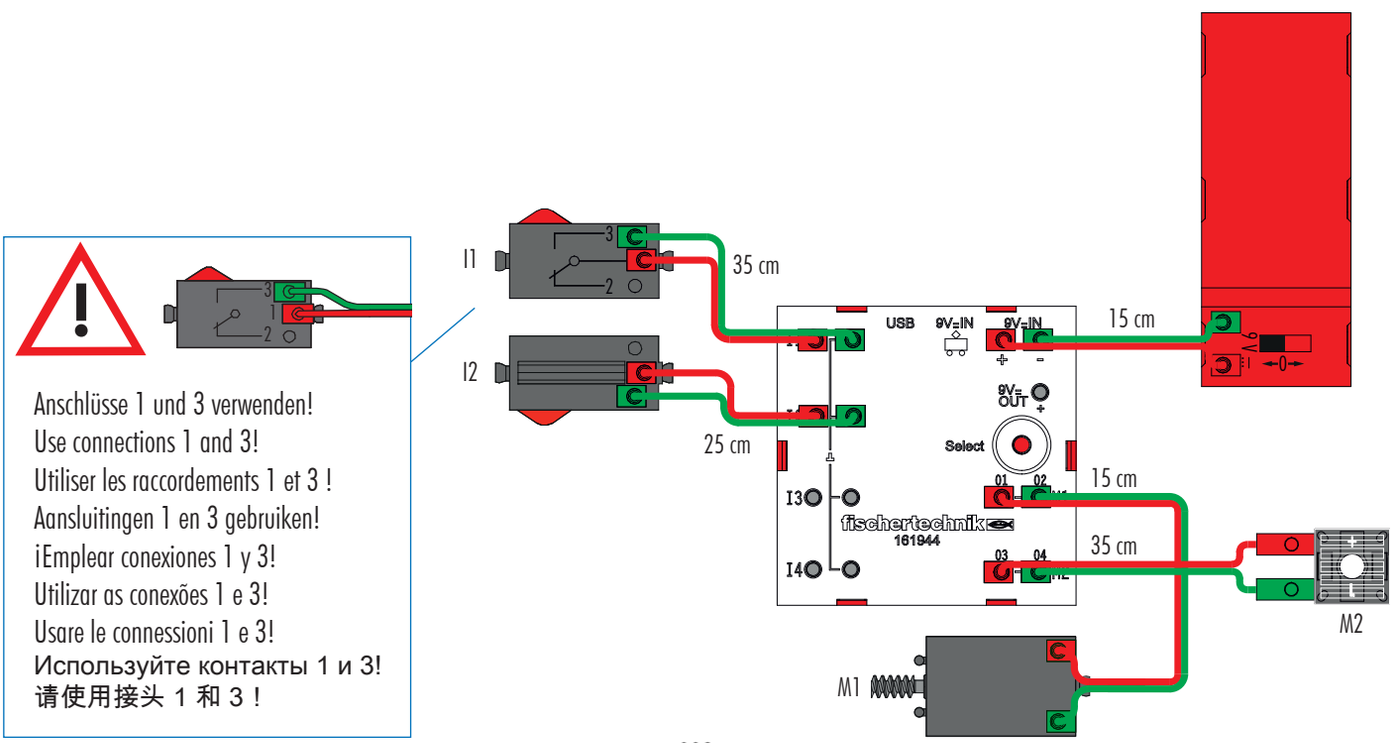

902

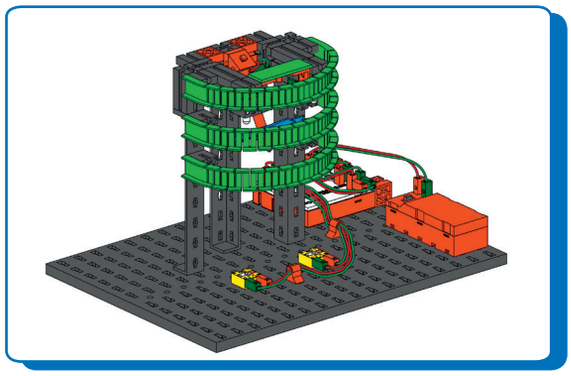

Händetrockner
Hand dryer
Sèche-mains

Handendroger
Secador de manos
Secador de mãos

Apparecchio asciugamani
Сушилка для рук
干手机

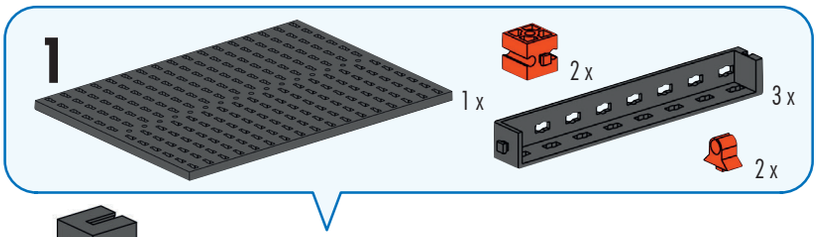

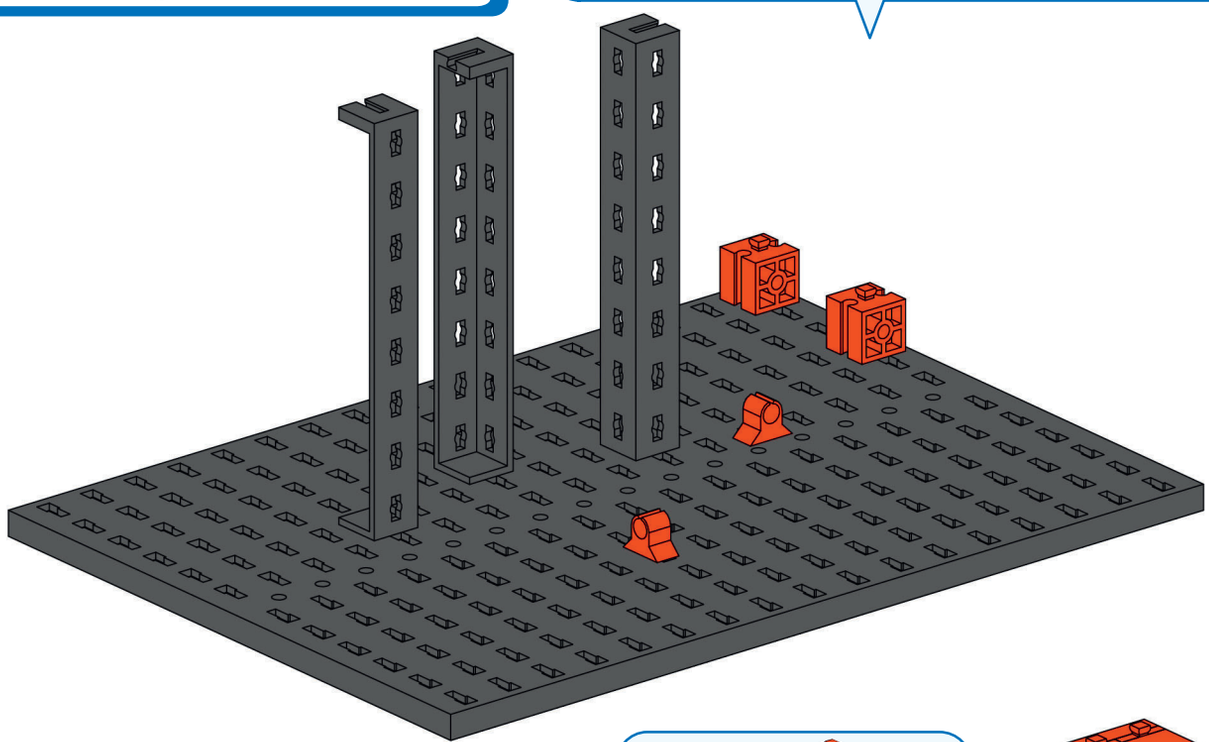

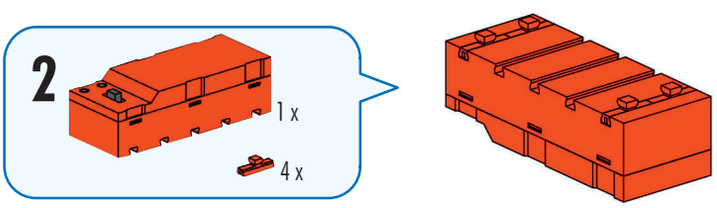

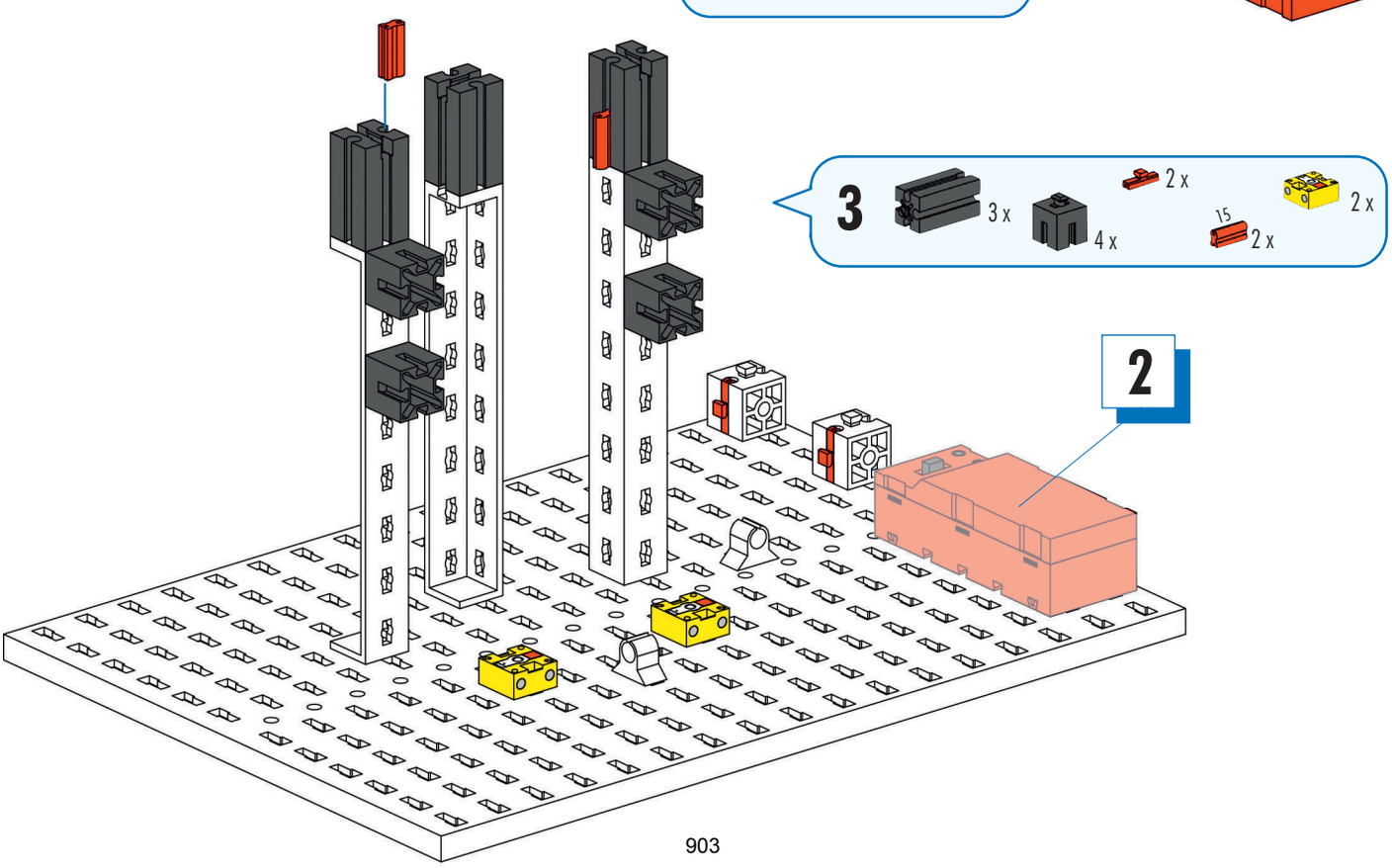

903

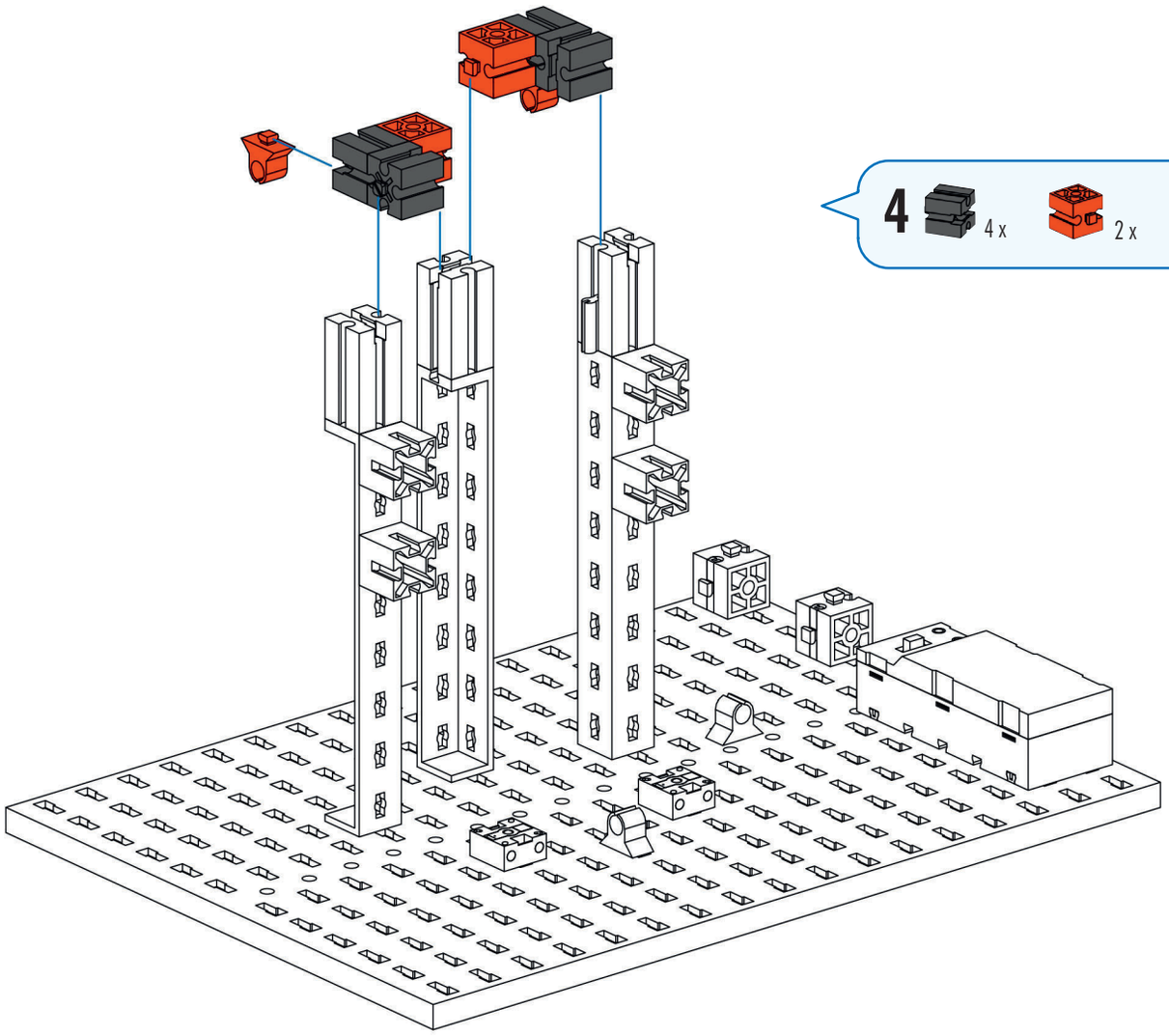

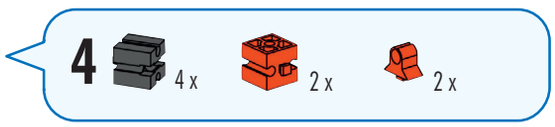
4
4 x
2 x
2 x

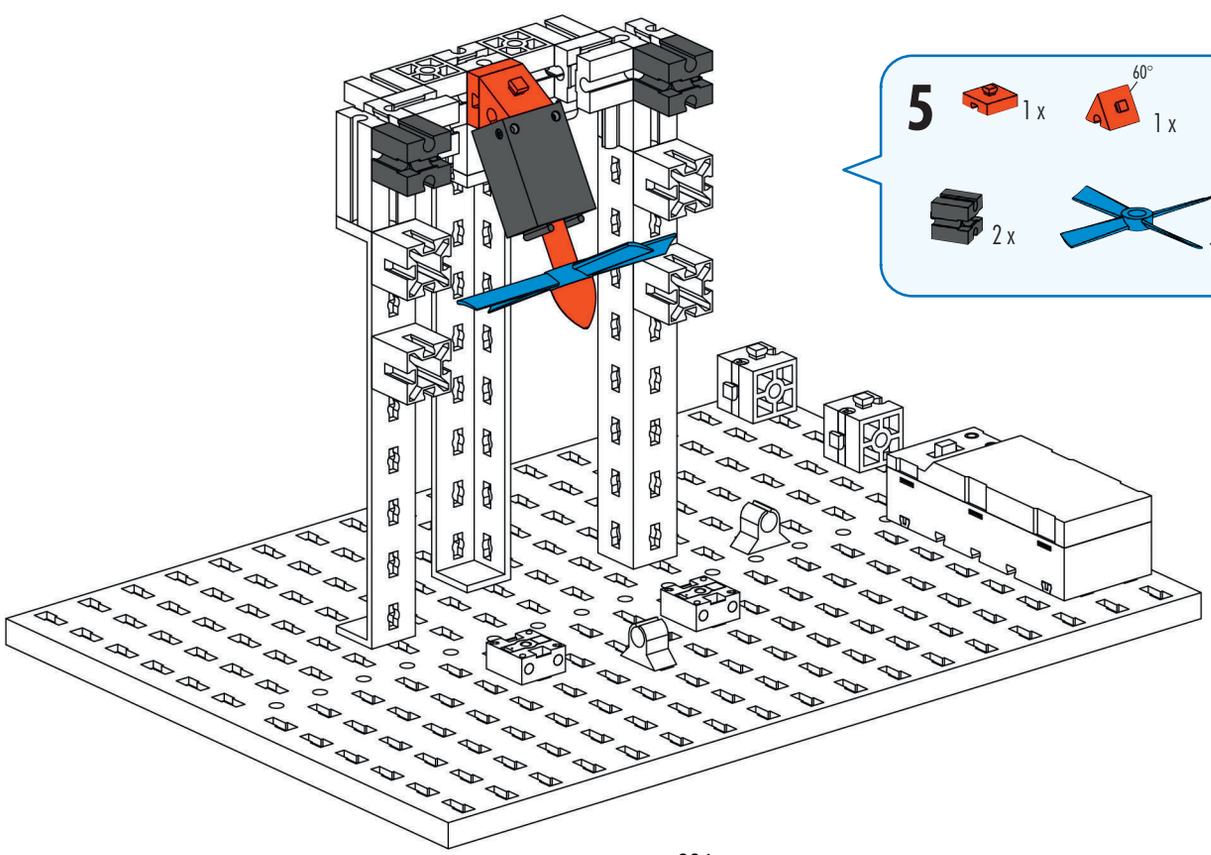

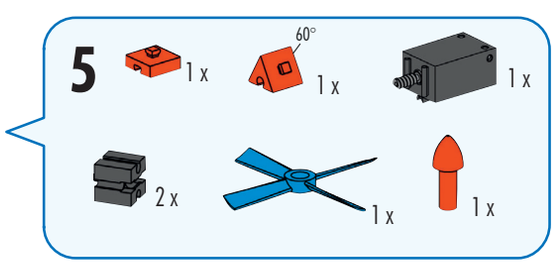
5
1 x
60°
1 x
1 x
2 x
1 x
1 x

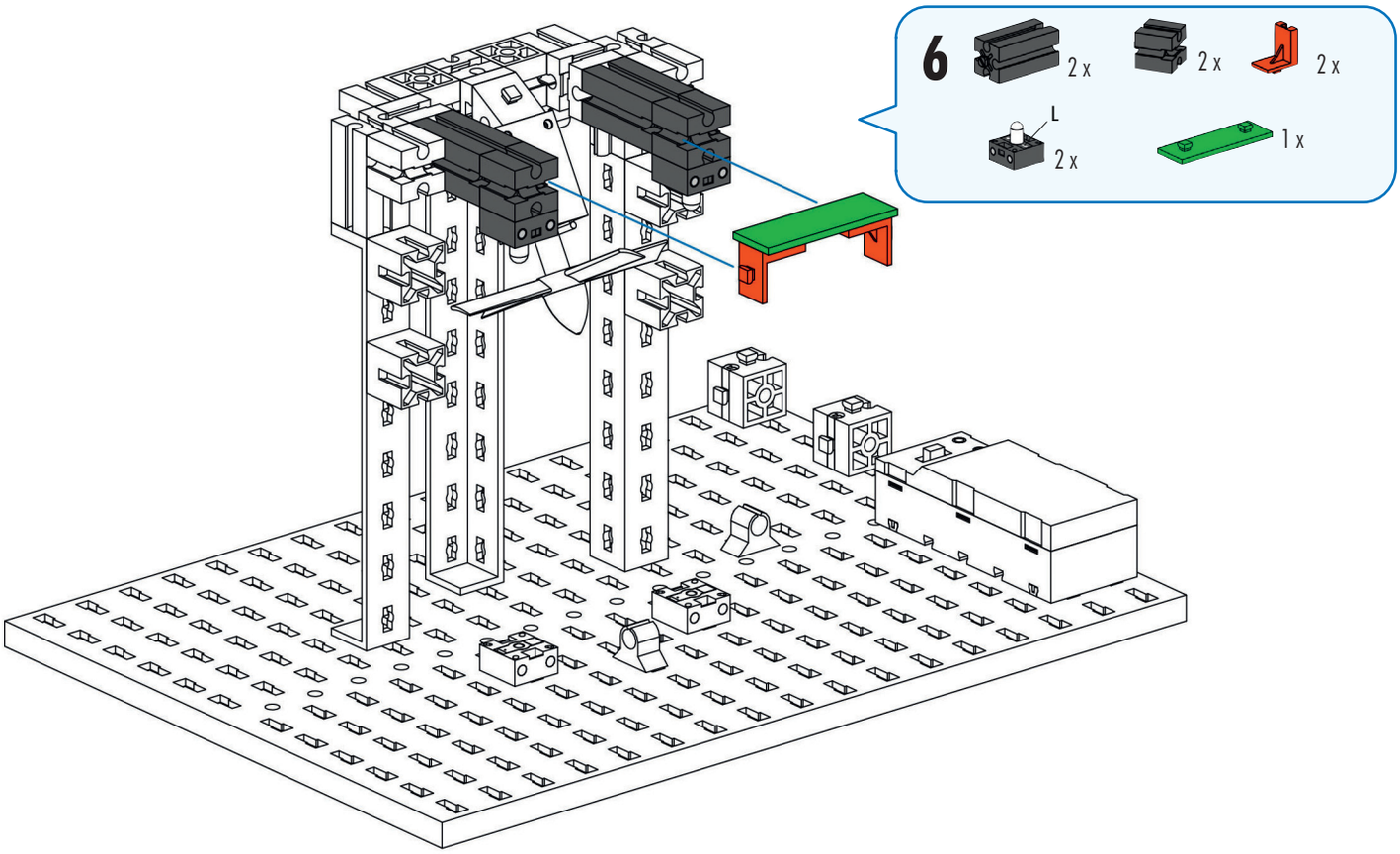

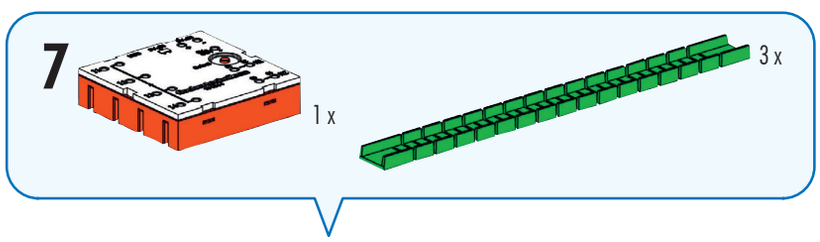

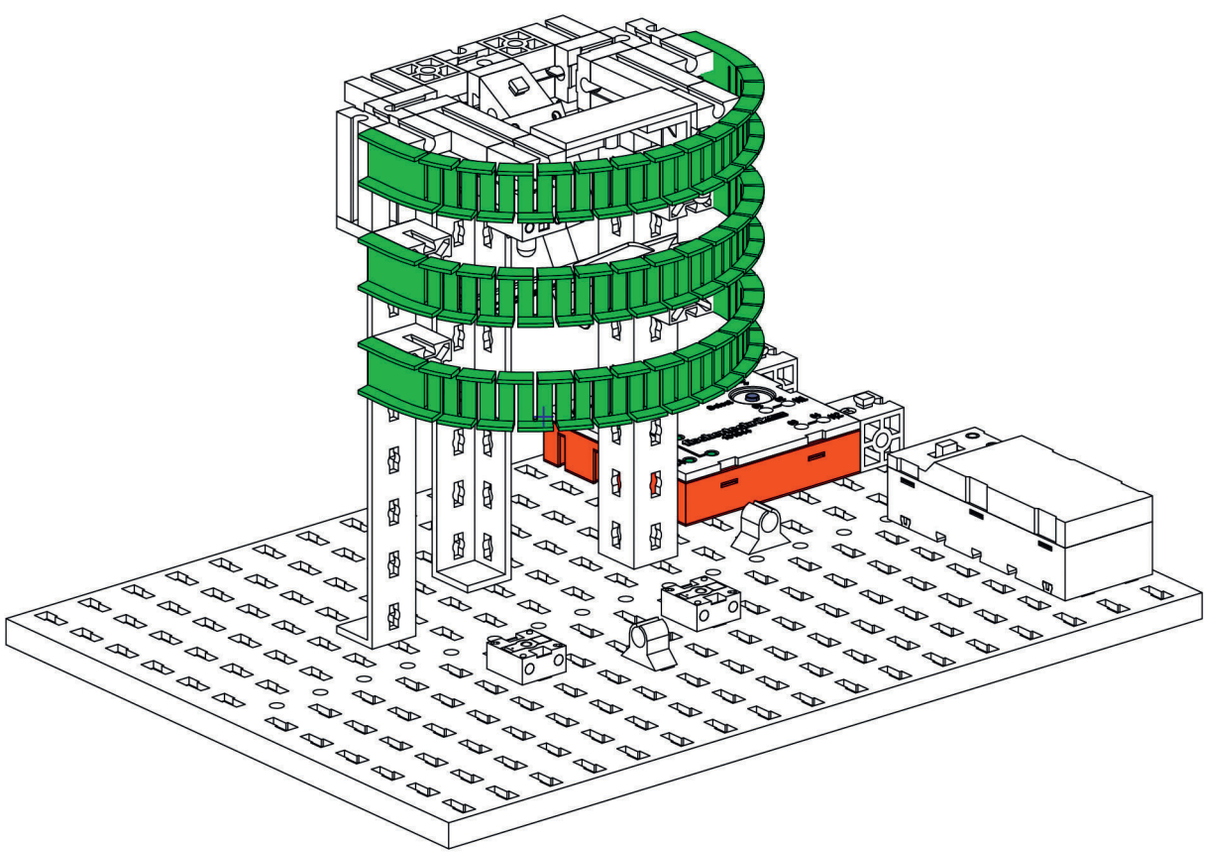

905

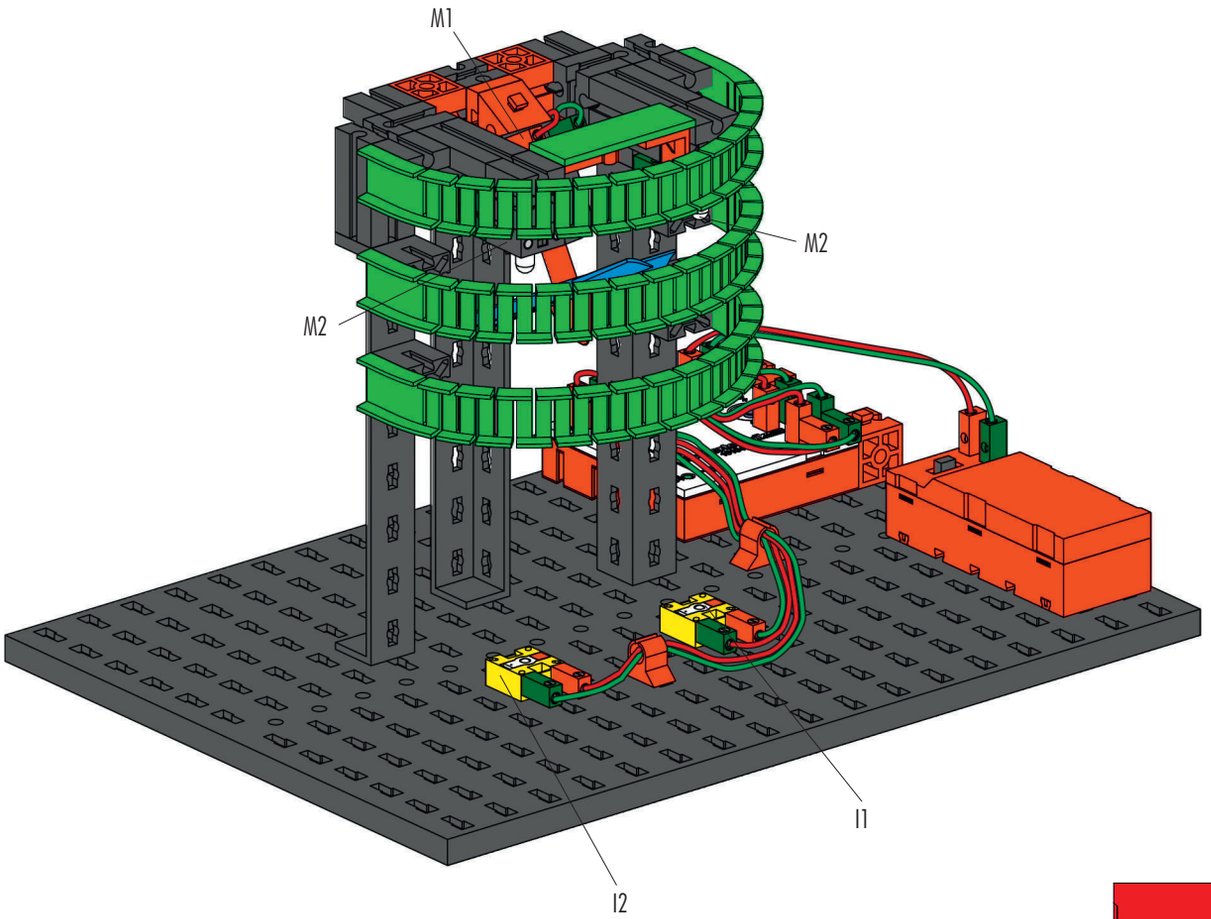

Schaltplan
Circuit diagram
Plan électrique

Schakelschema
Diagrama de circuitos
Plano elétrico de ligação

Schema elettrico
Схема подключения
电路图

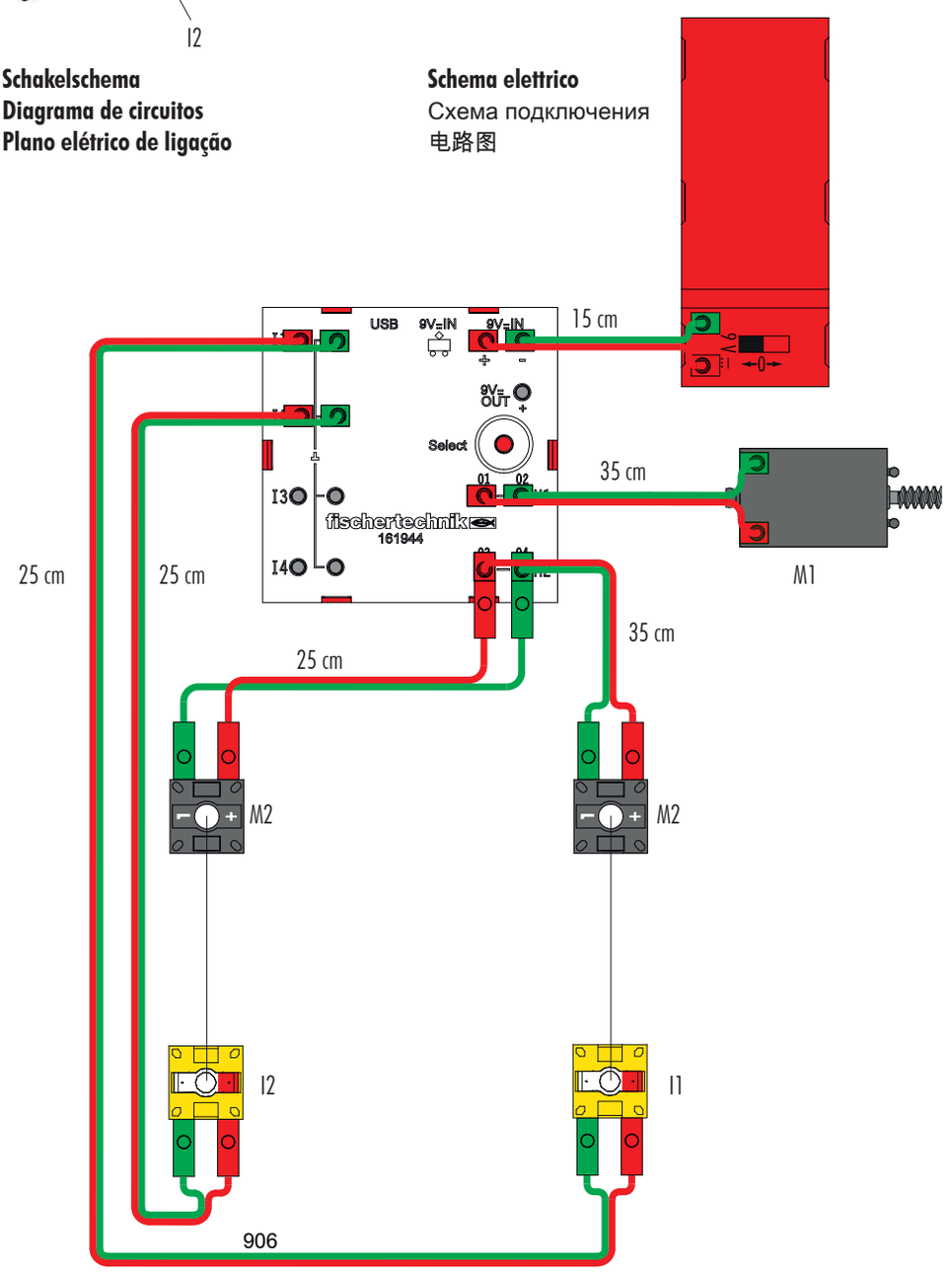

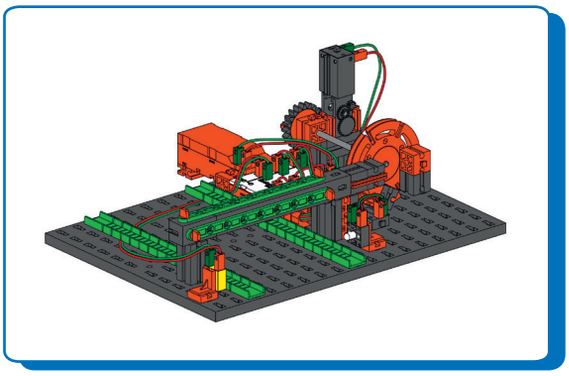

Schranke **Kasten** **Barriera**
Barrier **Barrera** Шлагбаум
Barrière **Barreira** 道口栏杆

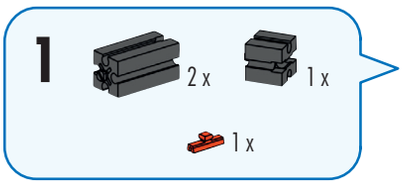

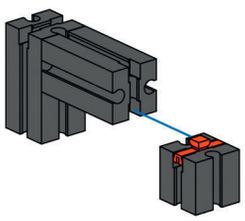

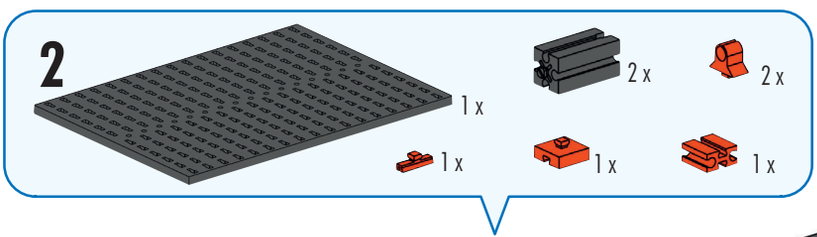

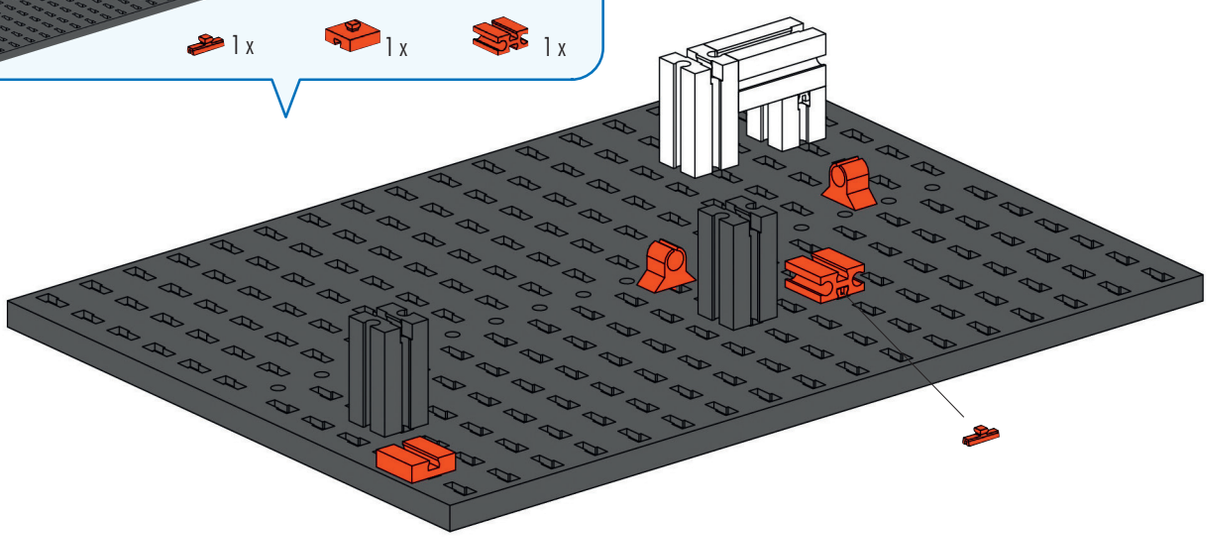

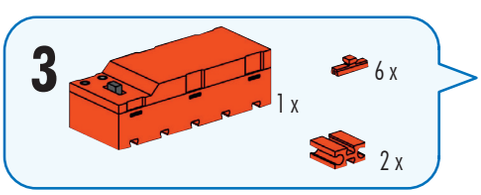

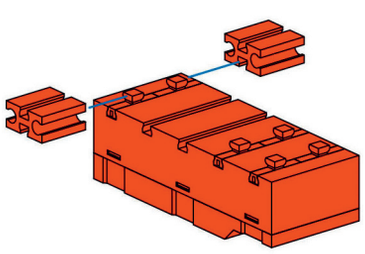

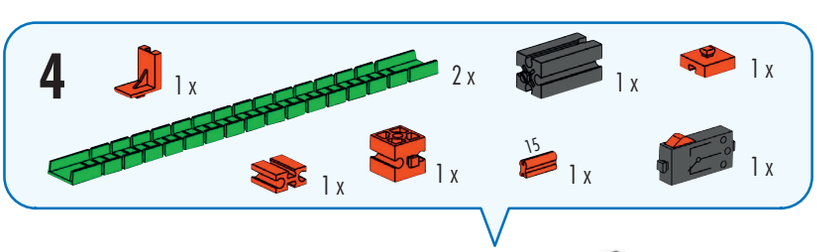

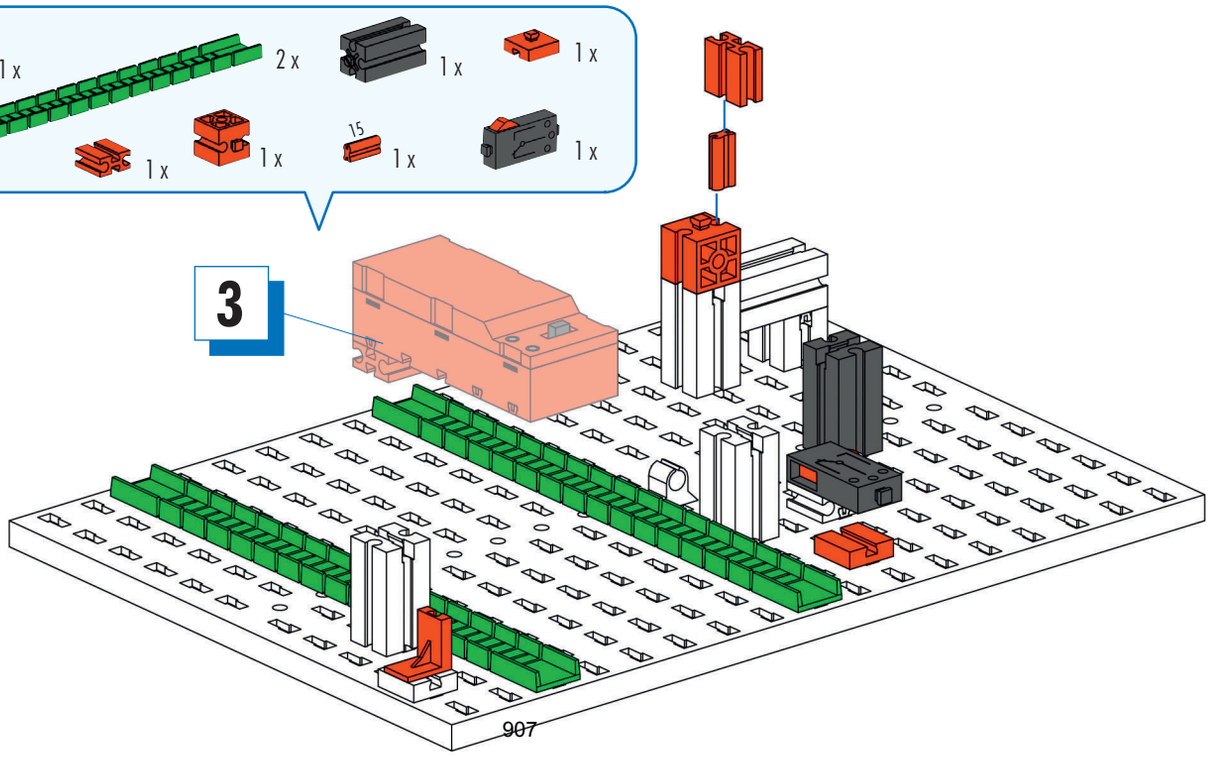

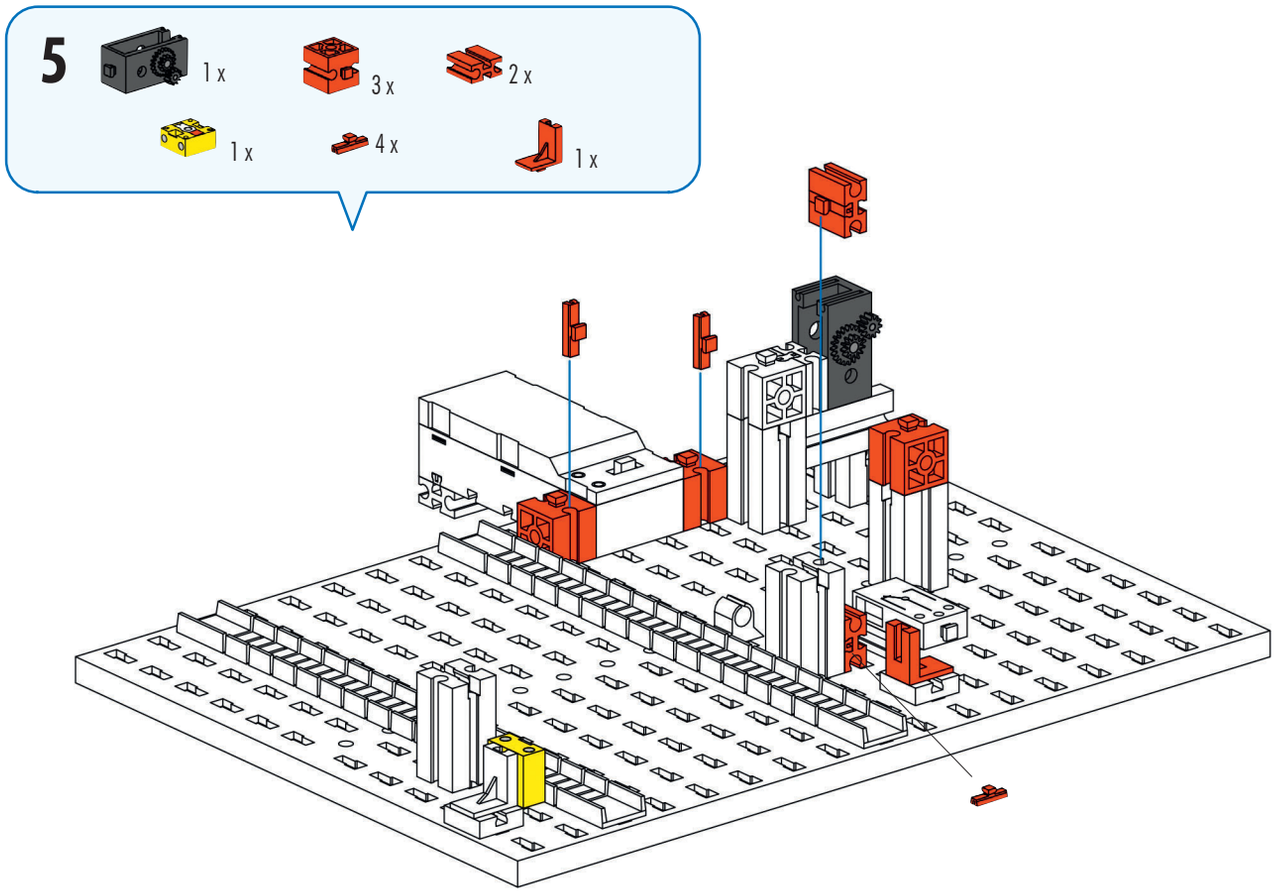
5
1 x
3 x
2 x
1 x
4 x
1 x

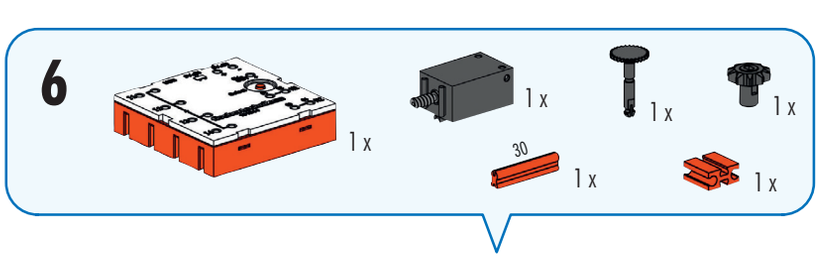
6
1 x
1 x
1 x
1 x
30
1 x
1 x

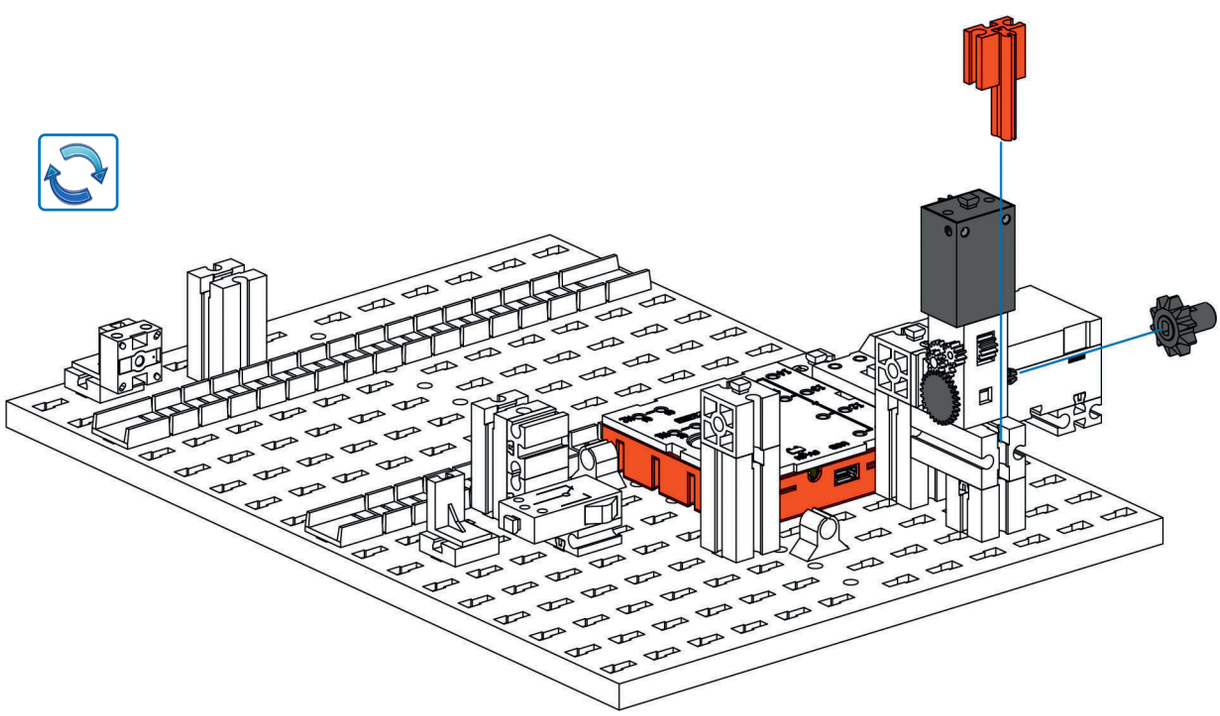

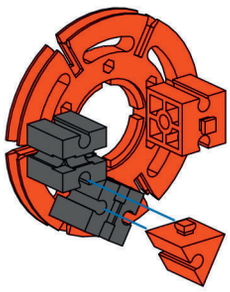

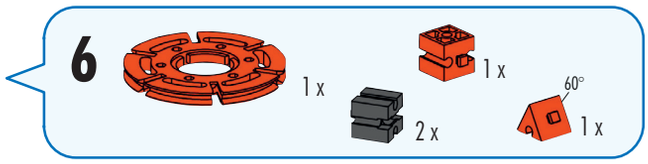
6
1 x
1 x
2 x
60°
1 x

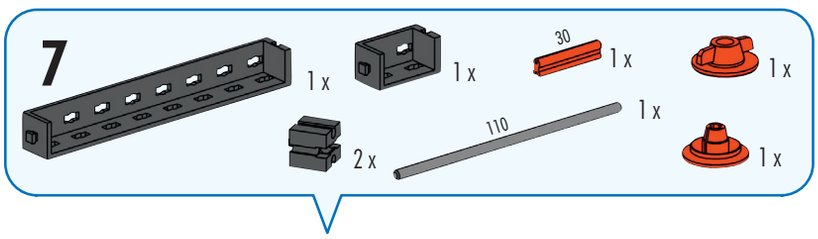
7
1 x
1 x
30
1 x
1 x
2 x
110
1 x
1 x

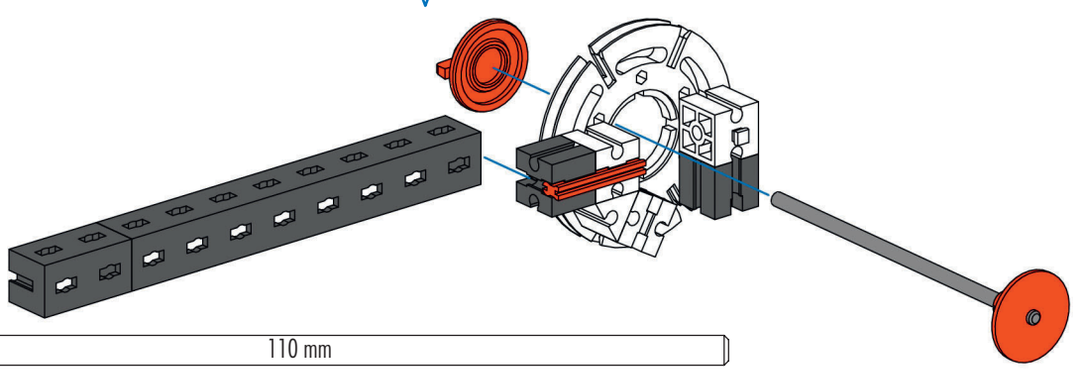
110 mm

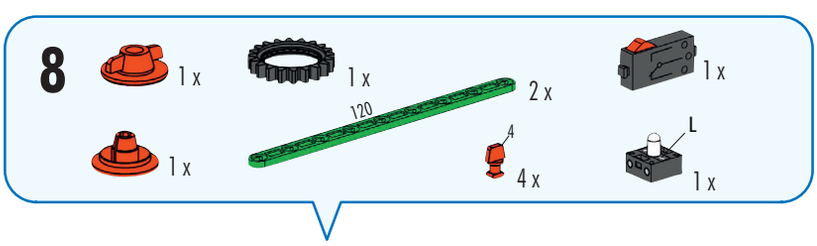
8
1 x
1 x
2 x
120
1 x
1 x
4
4 x
L
1 x

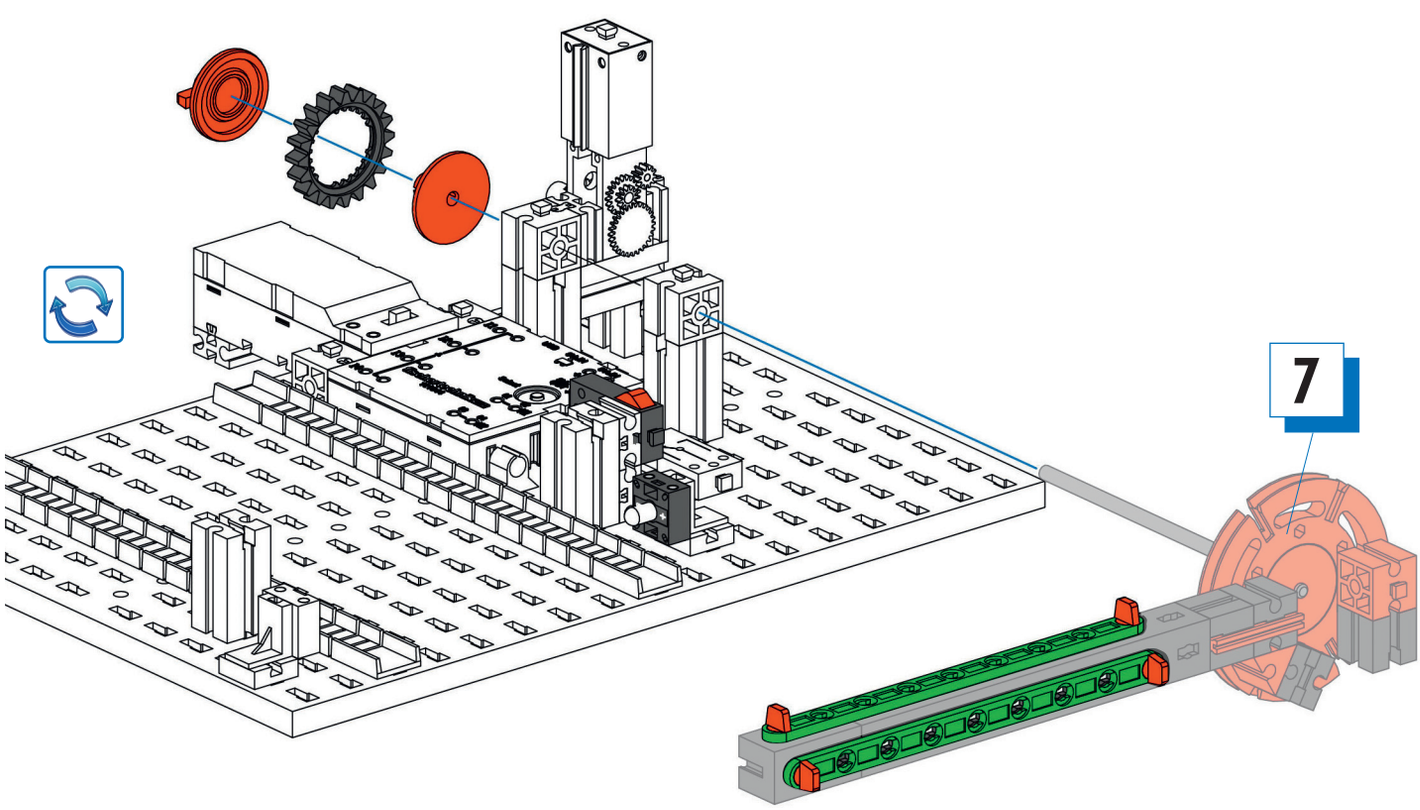
7

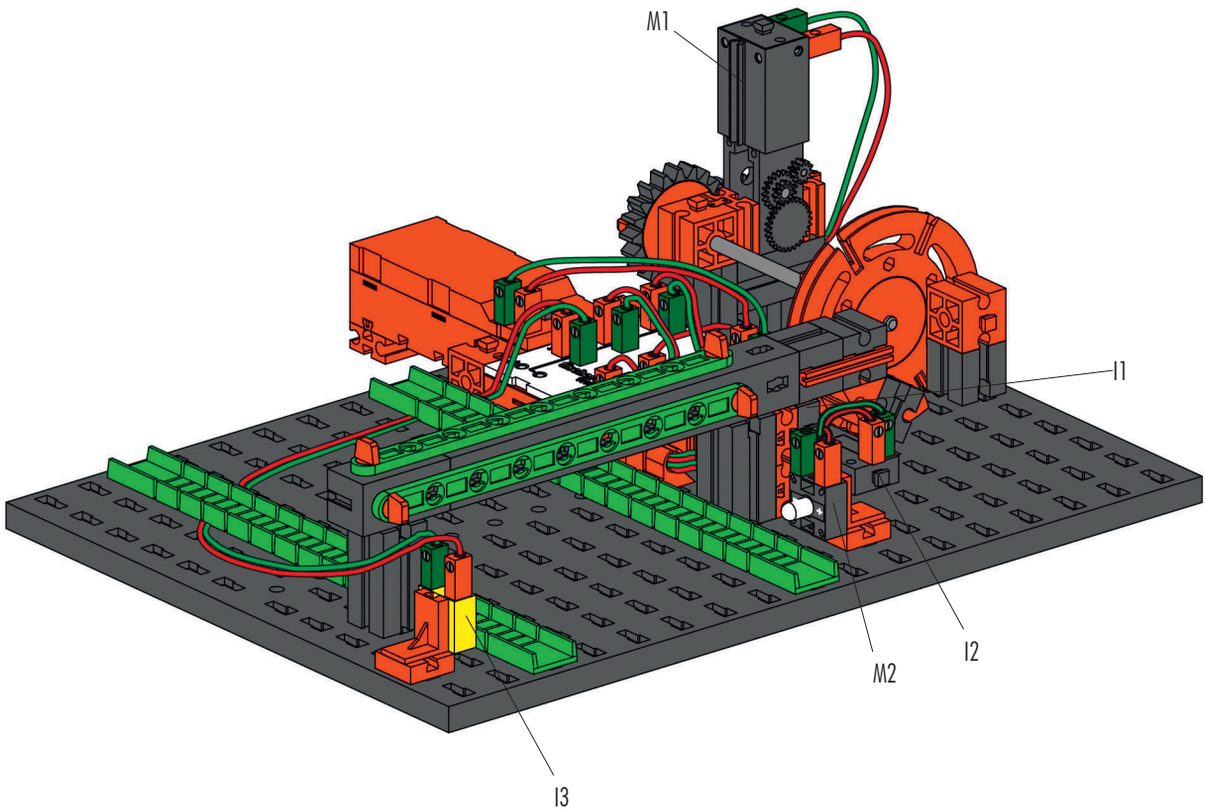

Schaltplan
Circuit diagram
Plan électrique

Schakelschema
Diagrama de circuitos
Plano elétrico de ligação

Schema elettrico
Схема подключения
电路图

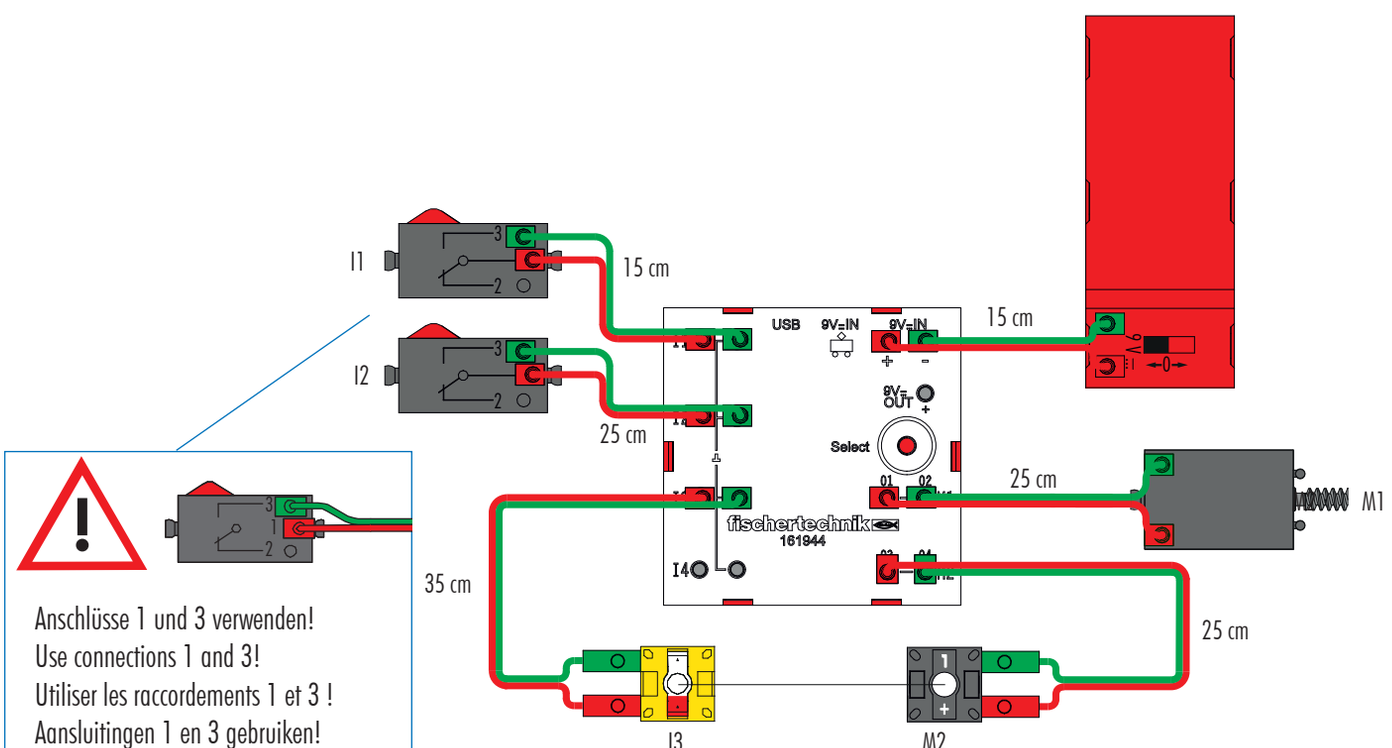

Anschlüsse 1 und 3 verwenden!
Use connections 1 and 3!
Utiliser les raccordements 1 et 3 !
Aansluitingen 1 en 3 gebruiken!
¡Emplear conexiones 1 y 3!
Utilizar as conexões 1 e 3!
Usare le connessioni 1 e 3!
Используйте контакты 1 и 3!
请使用接头 1 和 3 !

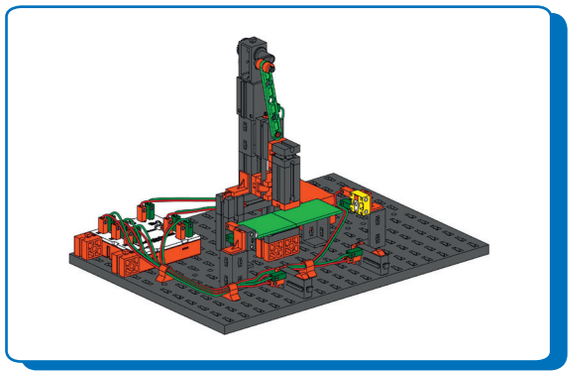

Stanze mit Sicherheitsschalter
Punch with safety switch
Poinçon avec interrupteur de sécurité

Stans met veiligheidsschakelaar
Punzonadora con interruptor de seguridad
Punção com interruptor de segurança

Punzonatrice con interruttore di sicurezza
Штамповочный пресс с защитным выключателем
带安全开关的冲压机

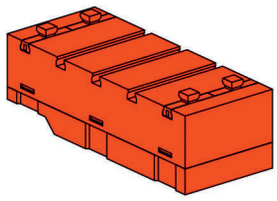

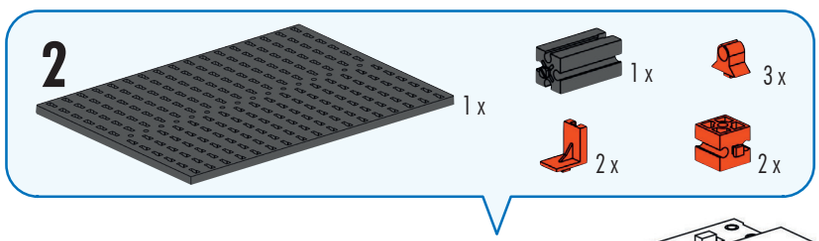

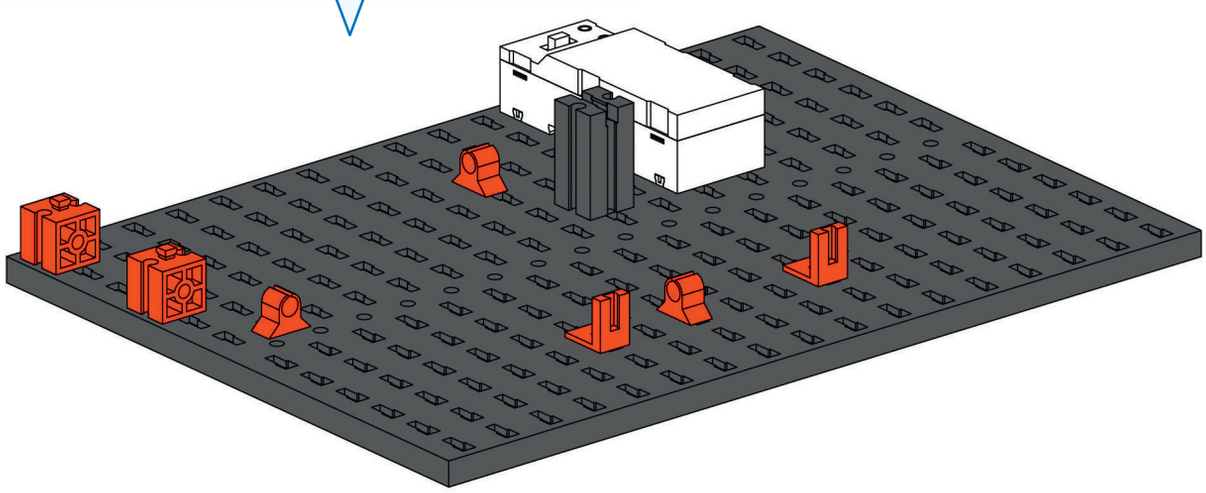

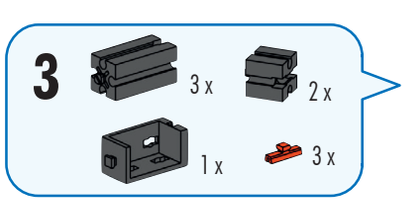

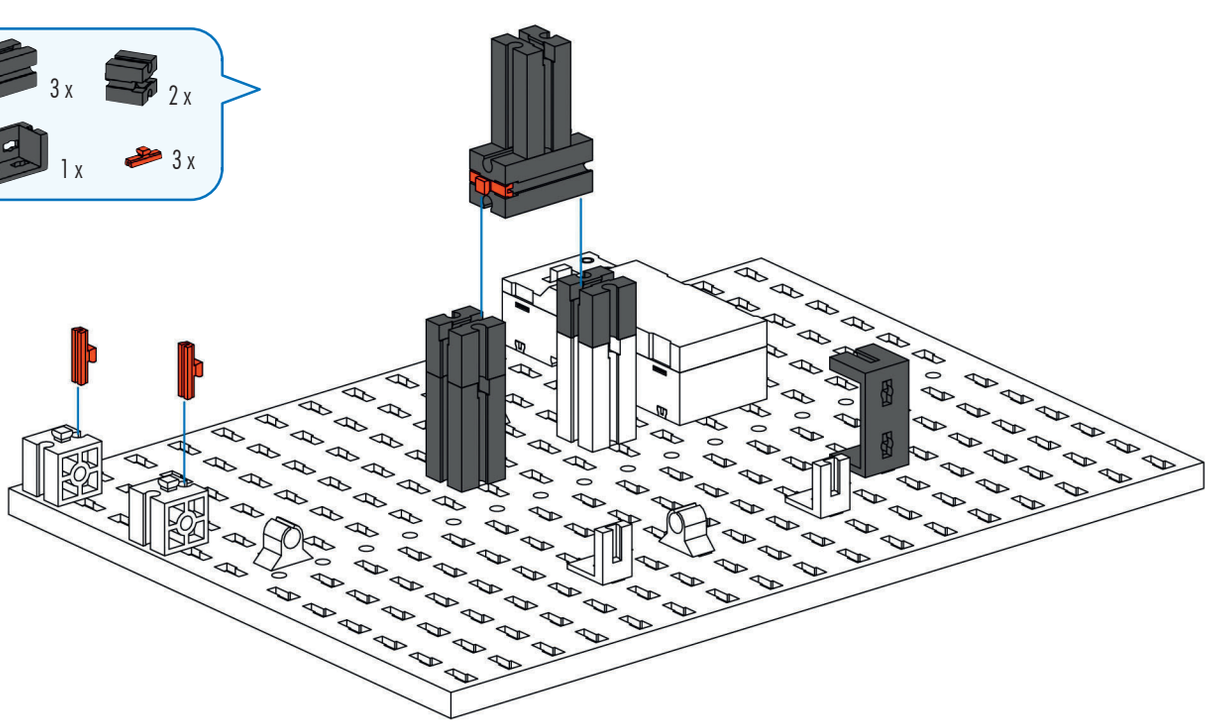

4 1 x 2 x 2 x 2 x

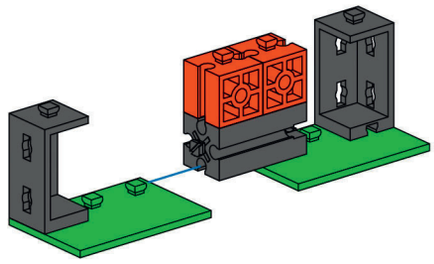

5 3 x 1 x 2 x

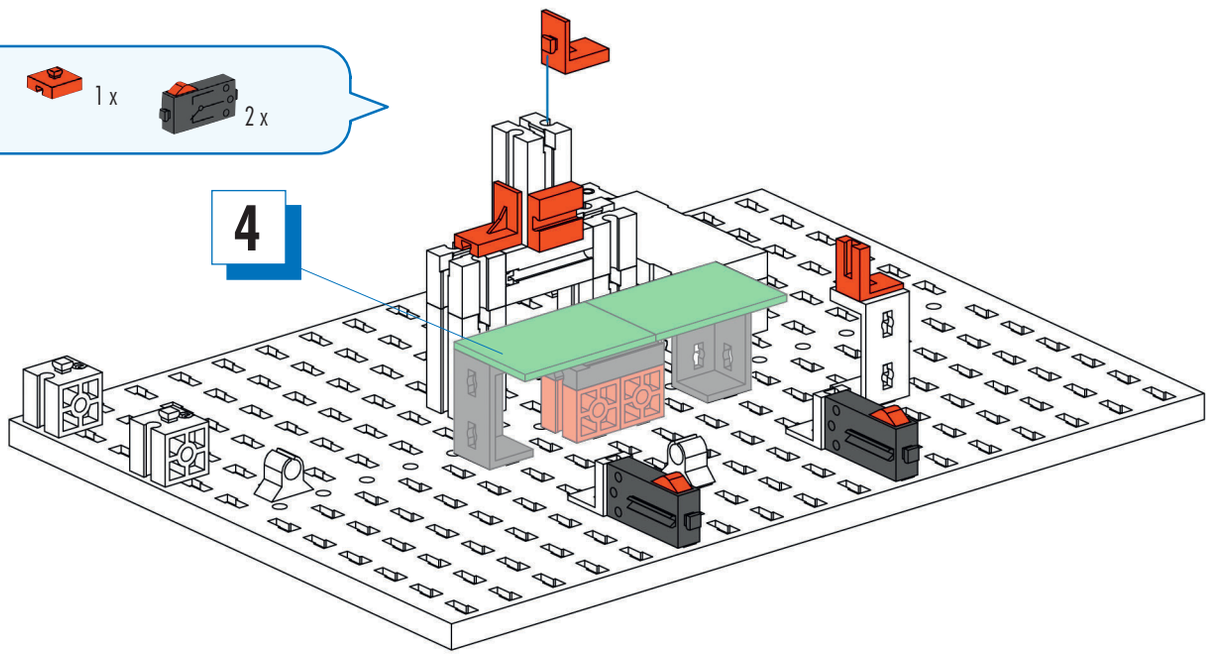

6 2 x 1 x 1 x 15 2 x 1 x

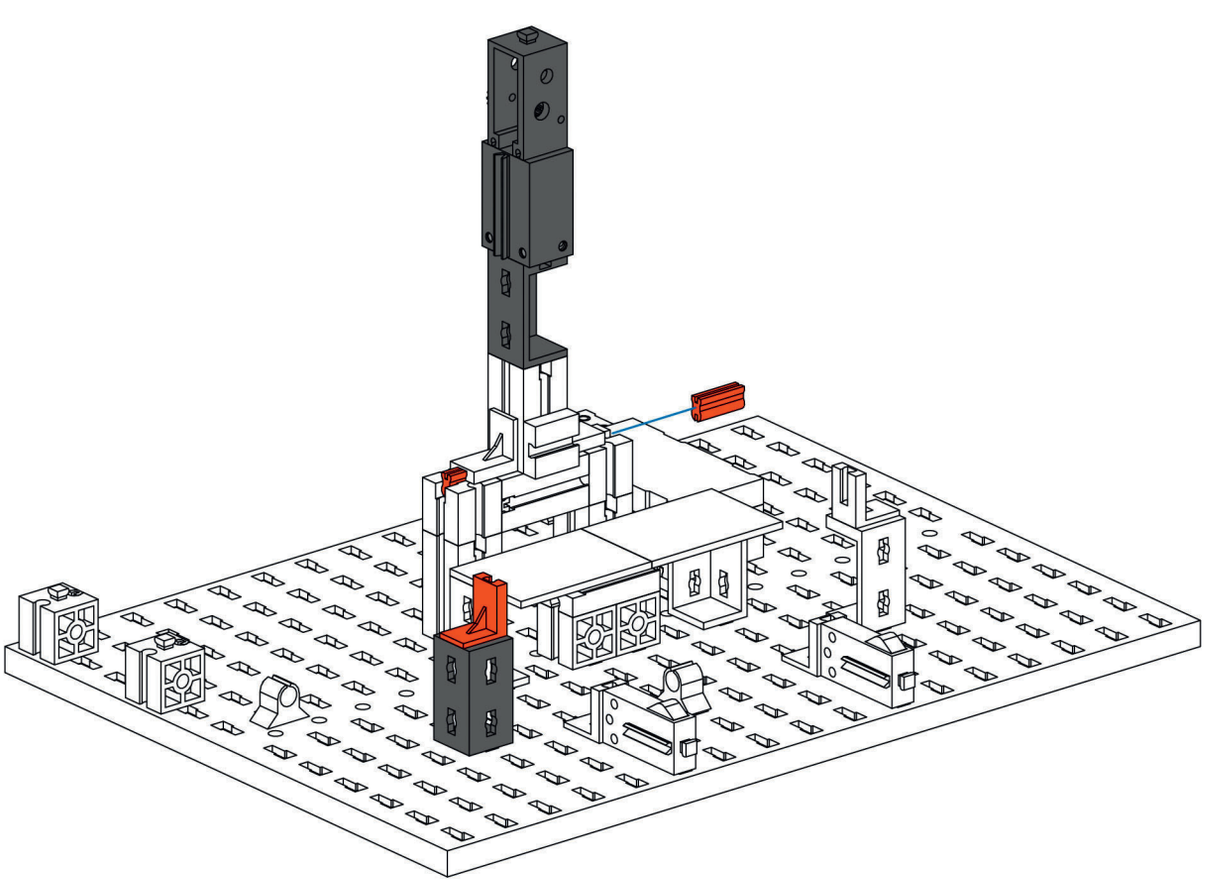

912

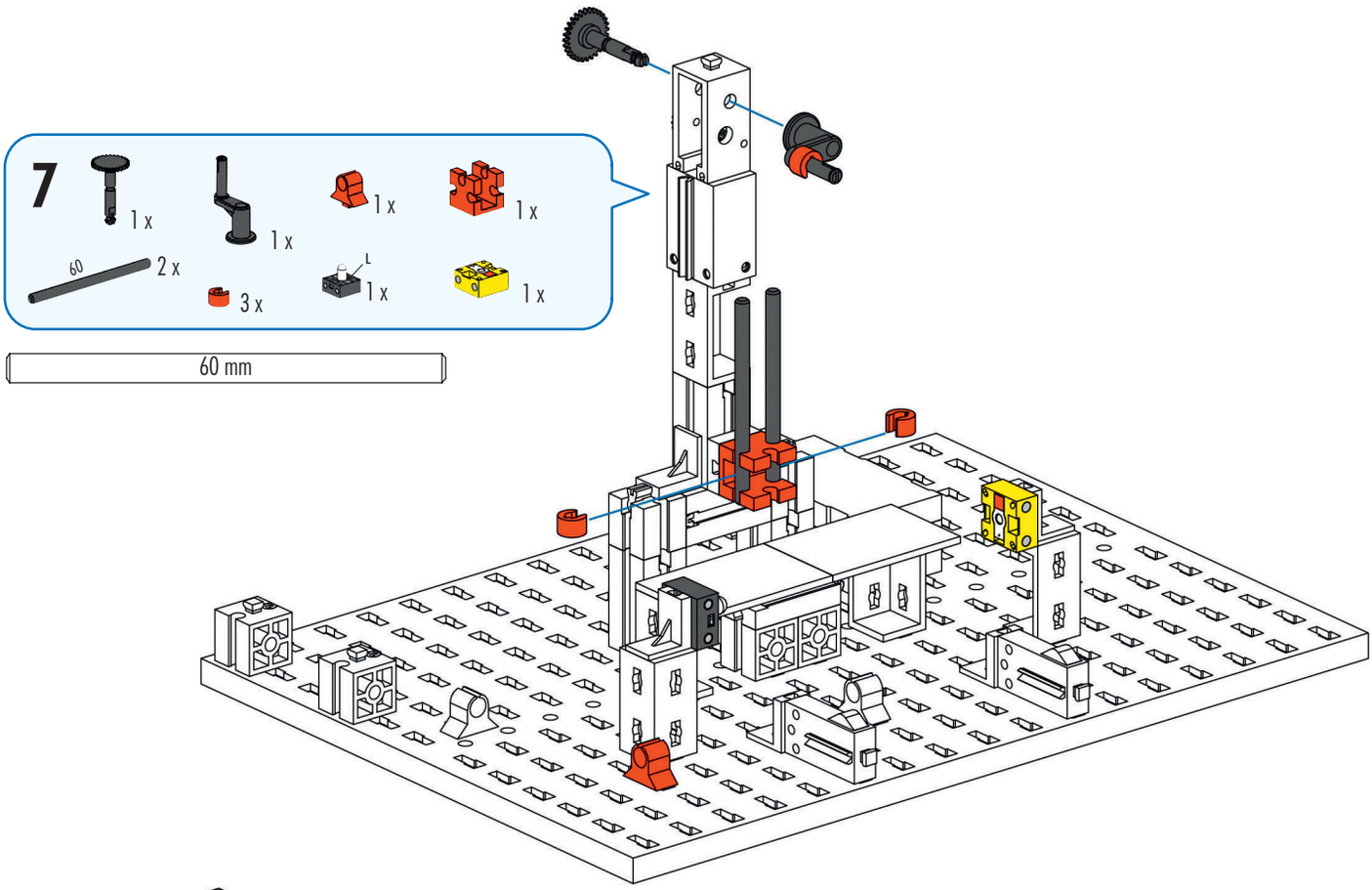

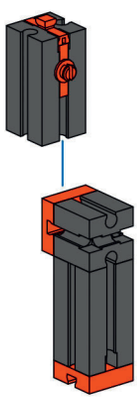

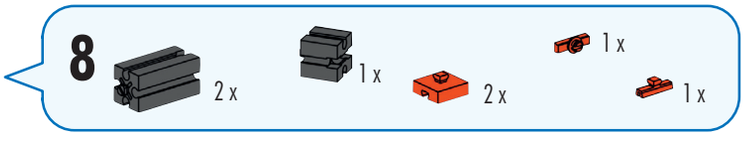

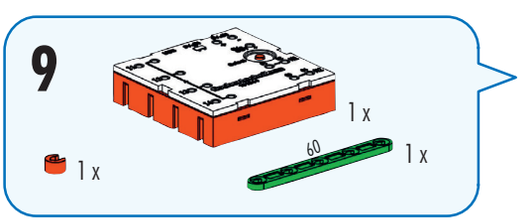

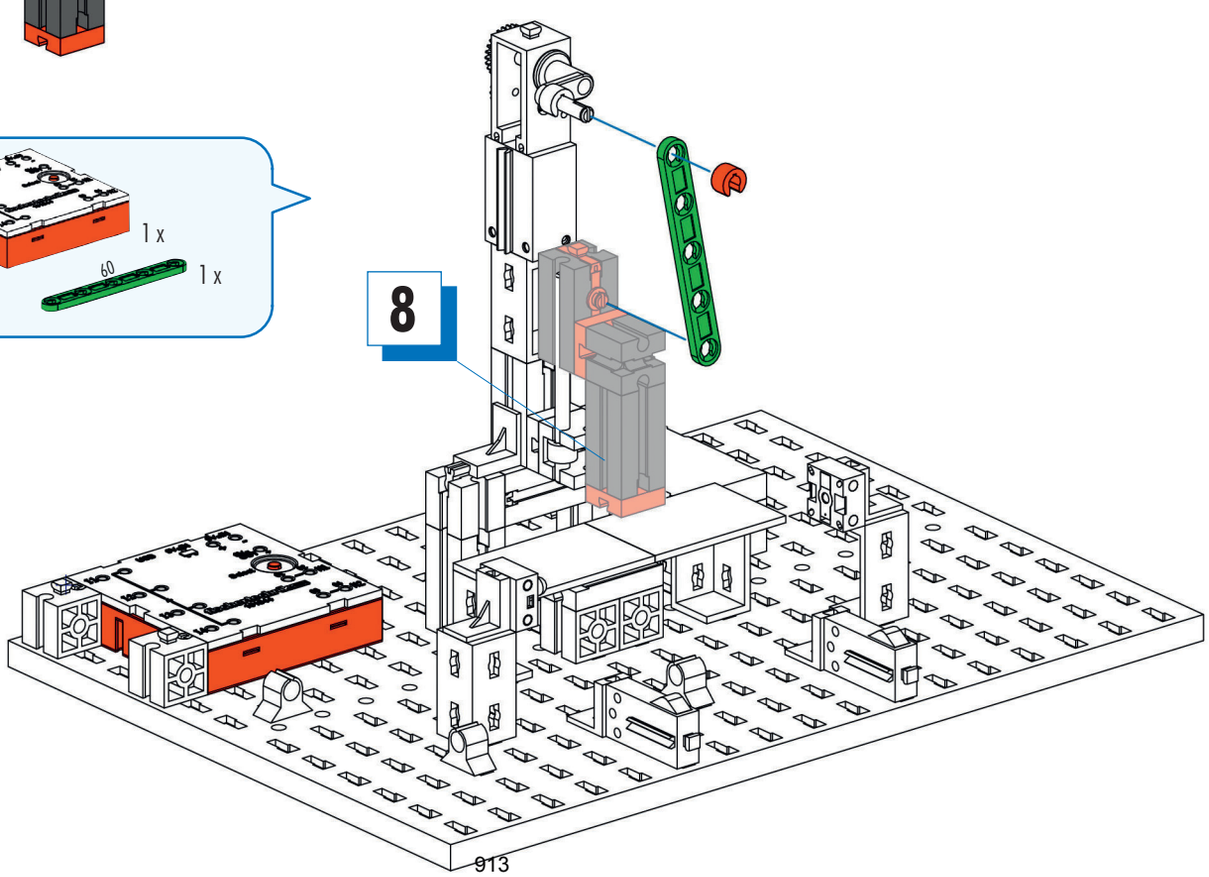

913

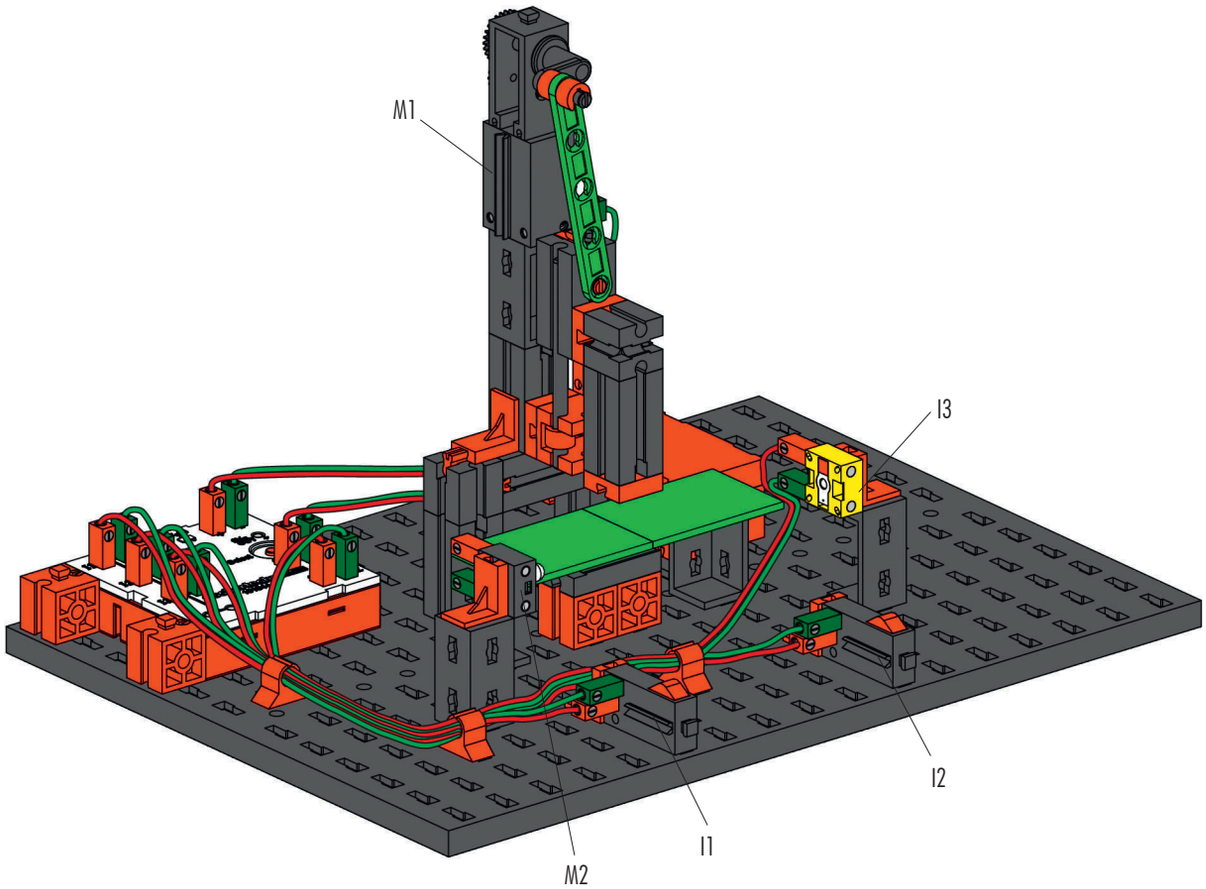

Schaltplan
Circuit diagram
Plan électrique

Schakelschema
Diagrama de circuitos
Plano elétrico de ligação

Schema elettrico
Схема подключения
电路图

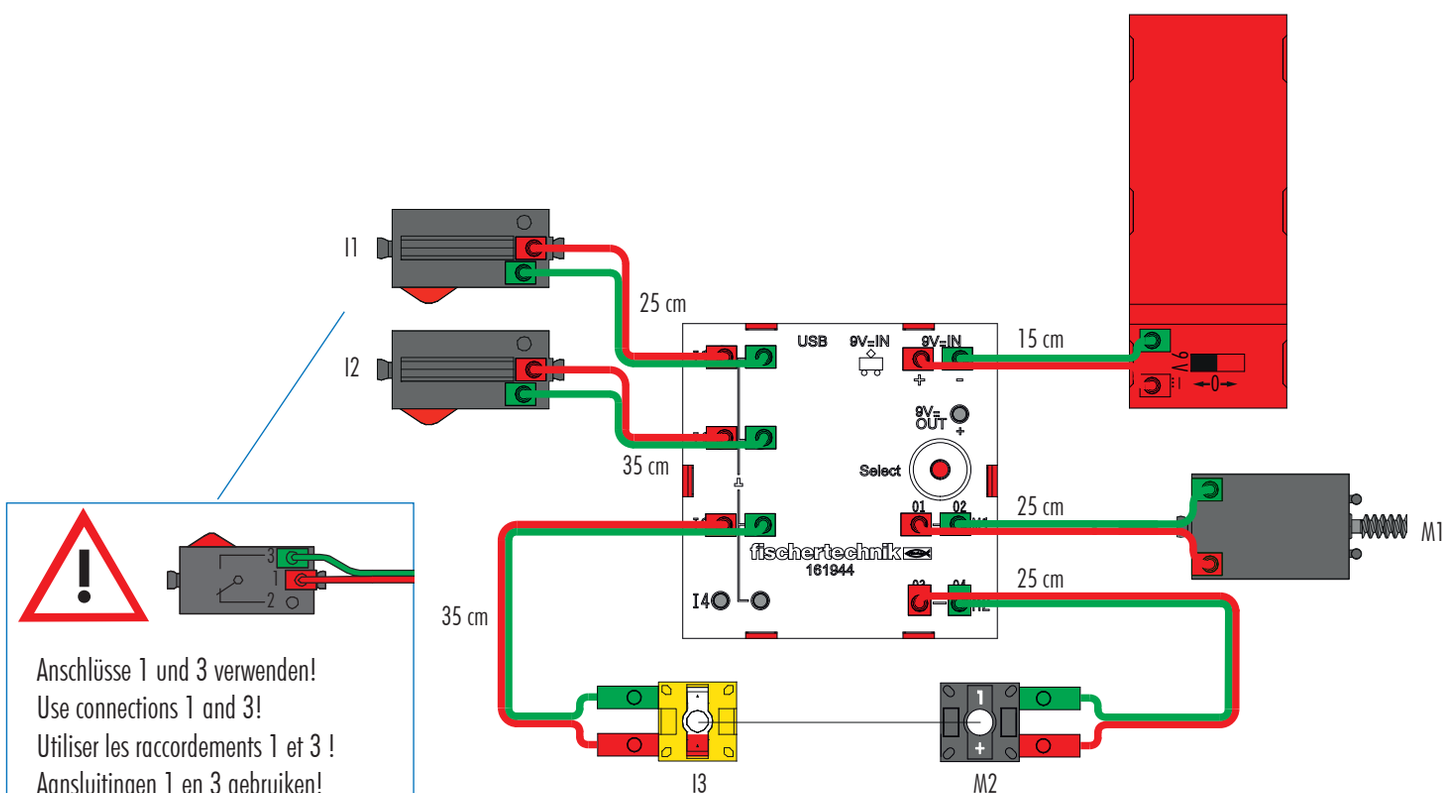

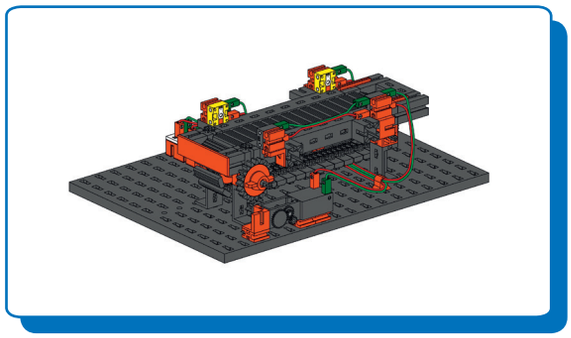

Förderband
Conveyor belt
Bande transporteuse
Transportband
Cinta transportadora
Correia transportadora
Nastro trasportatore
Ленточный транспортер
输送带

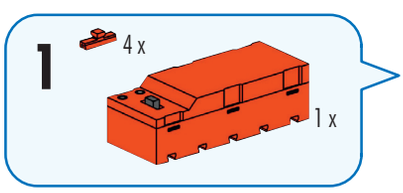

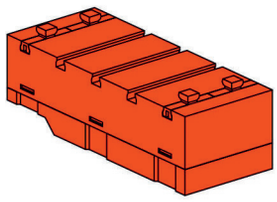

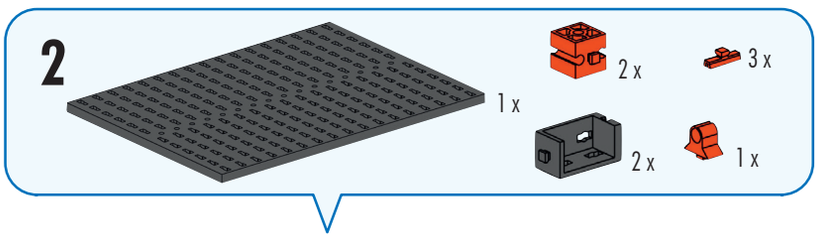

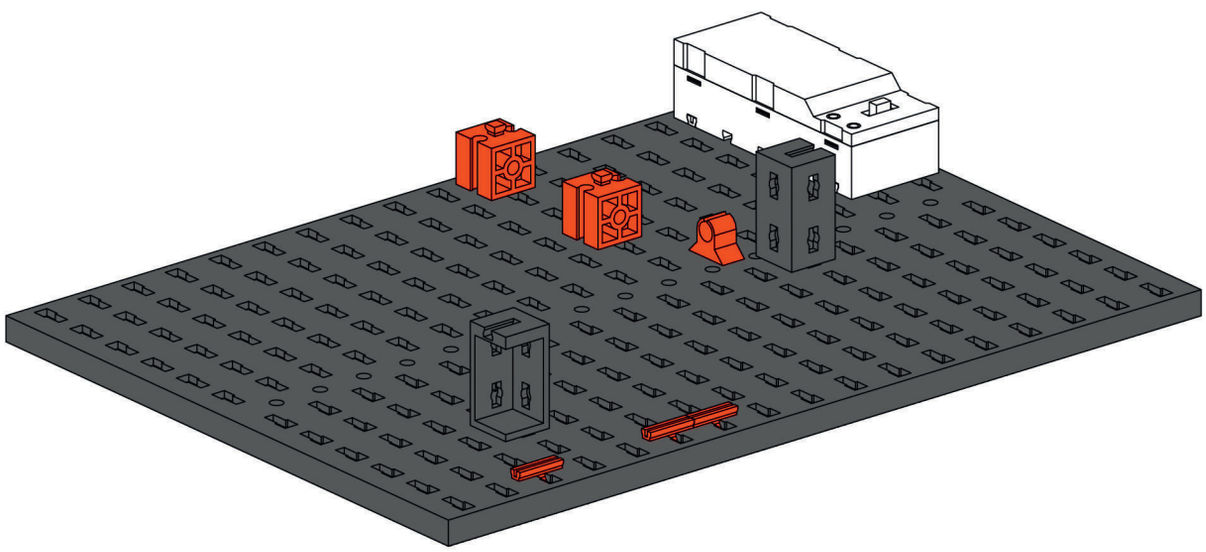

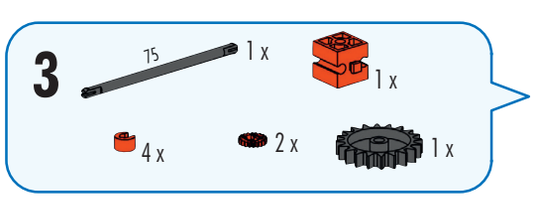

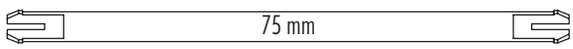

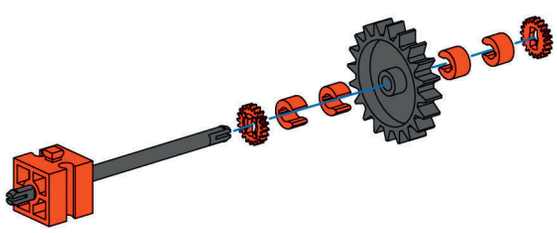

915

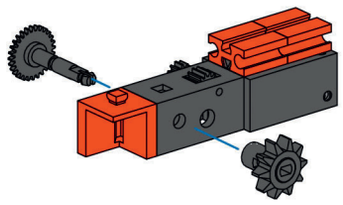

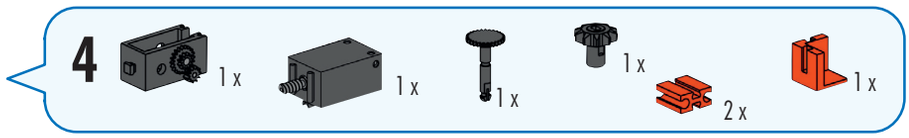
4
1 x
1 x
1 x
1 x
2 x
1 x

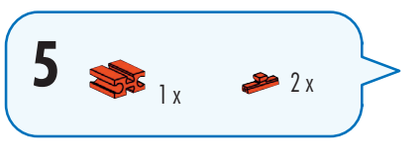
5
1 x
2 x

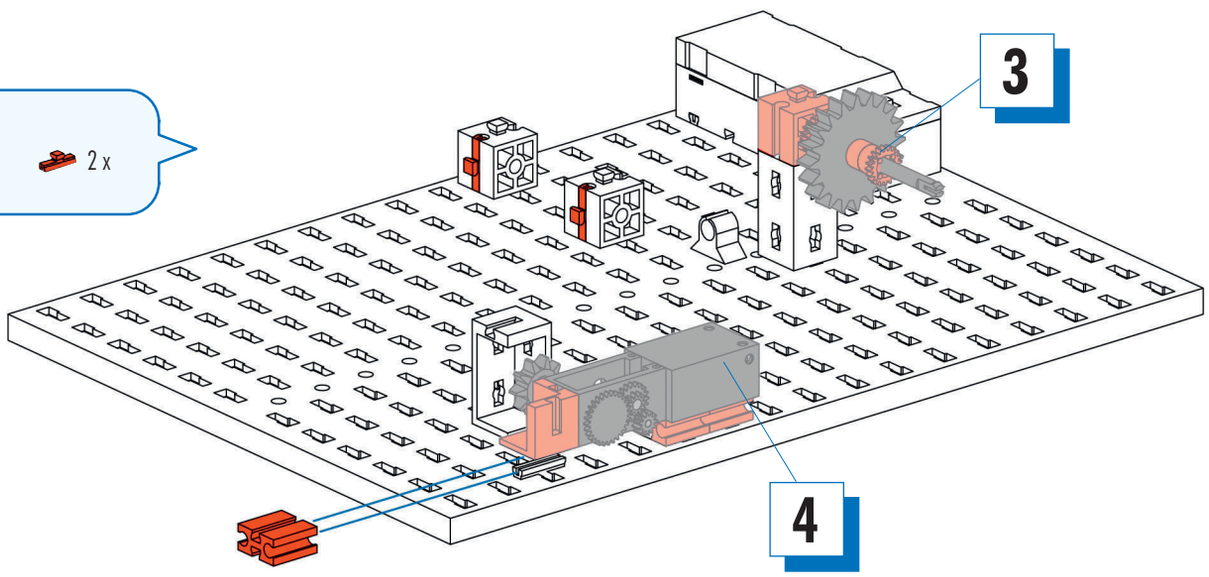
3
4

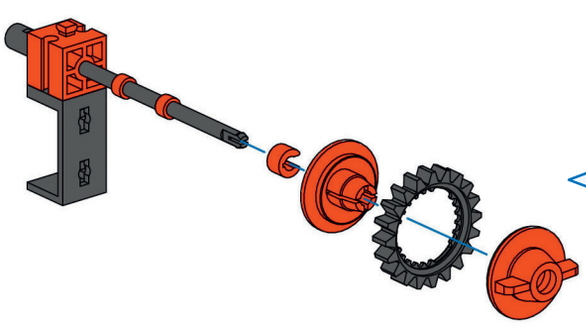

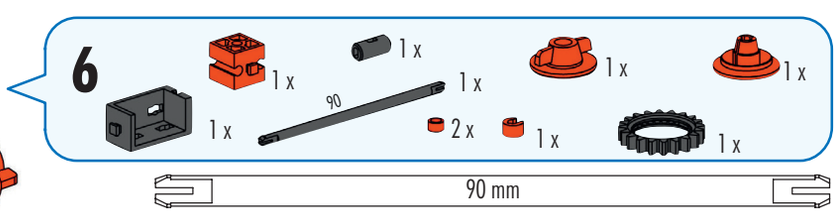
6
1 x
1 x
1 x
1 x
1 x
90
2 x
1 x
1 x
90 mm

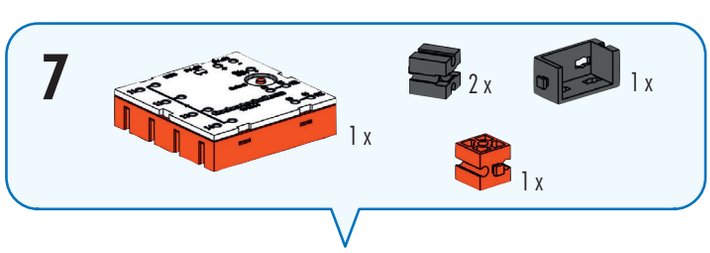
7
1 x
2 x
1 x
1 x

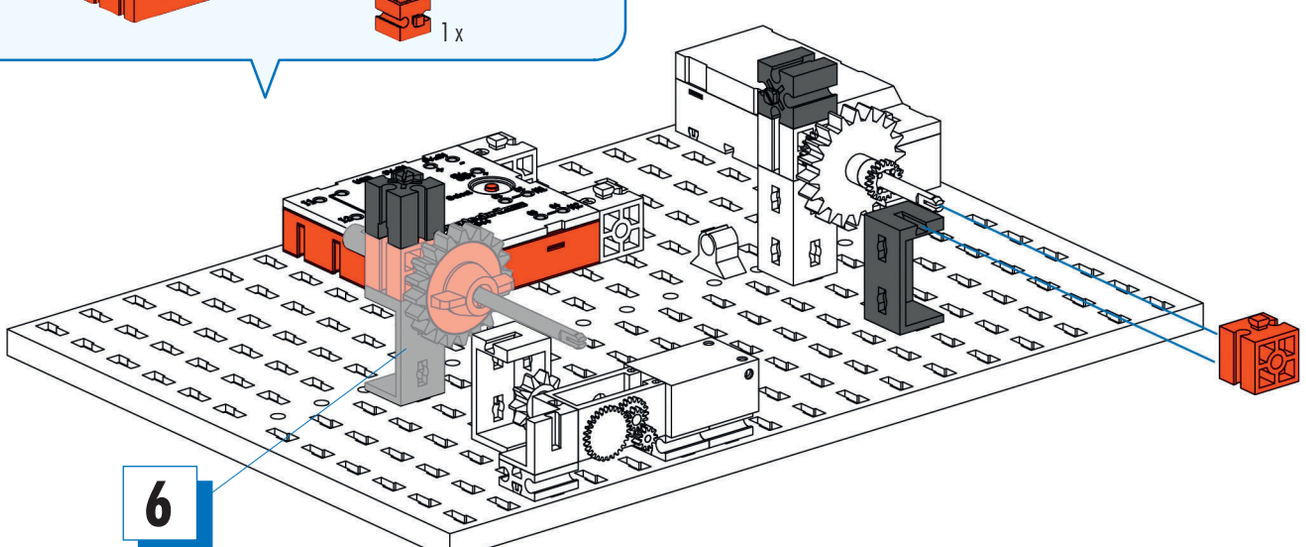
6

916

8 76 x 38 x

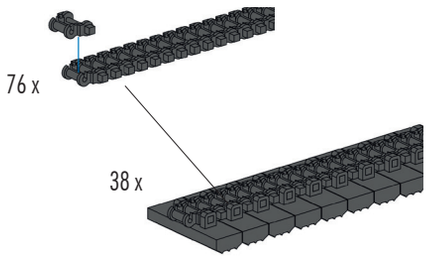

9 1 x 1 x

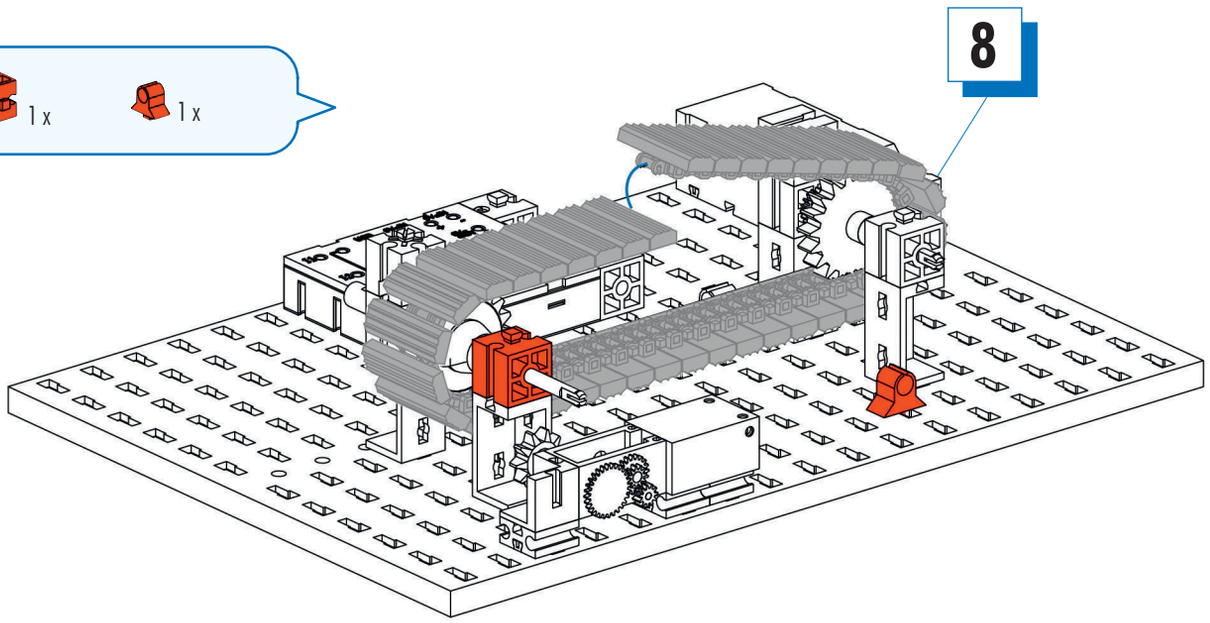

10 2 x 4 x 2 x

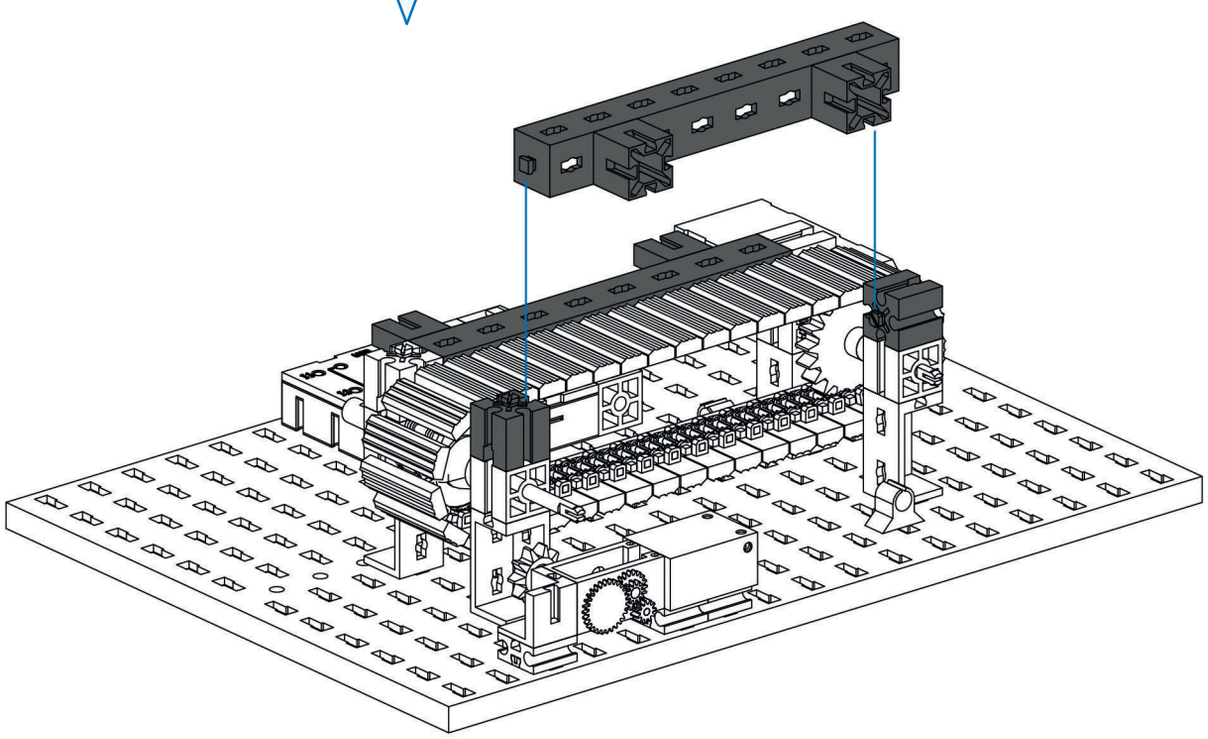

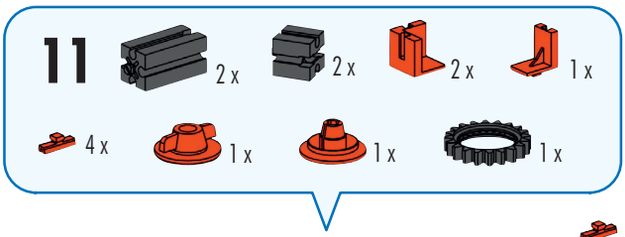
11
2 x
2 x
2 x
1 x
4 x
1 x
1 x
1 x

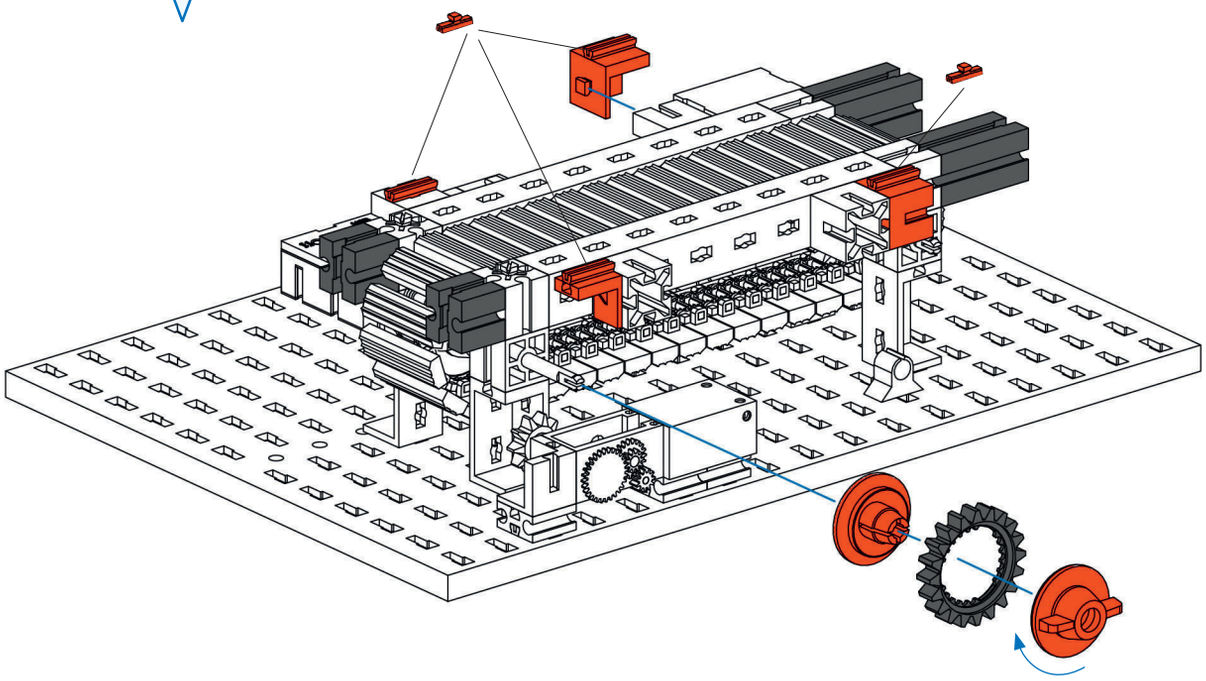

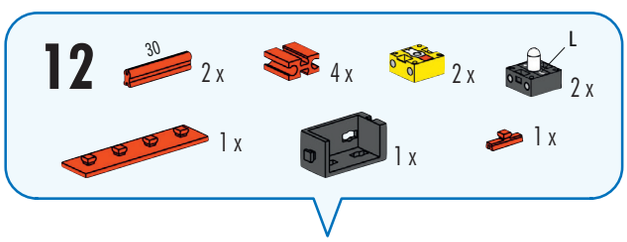
12
30
2 x
4 x
2 x
L
2 x
1 x
1 x
1 x

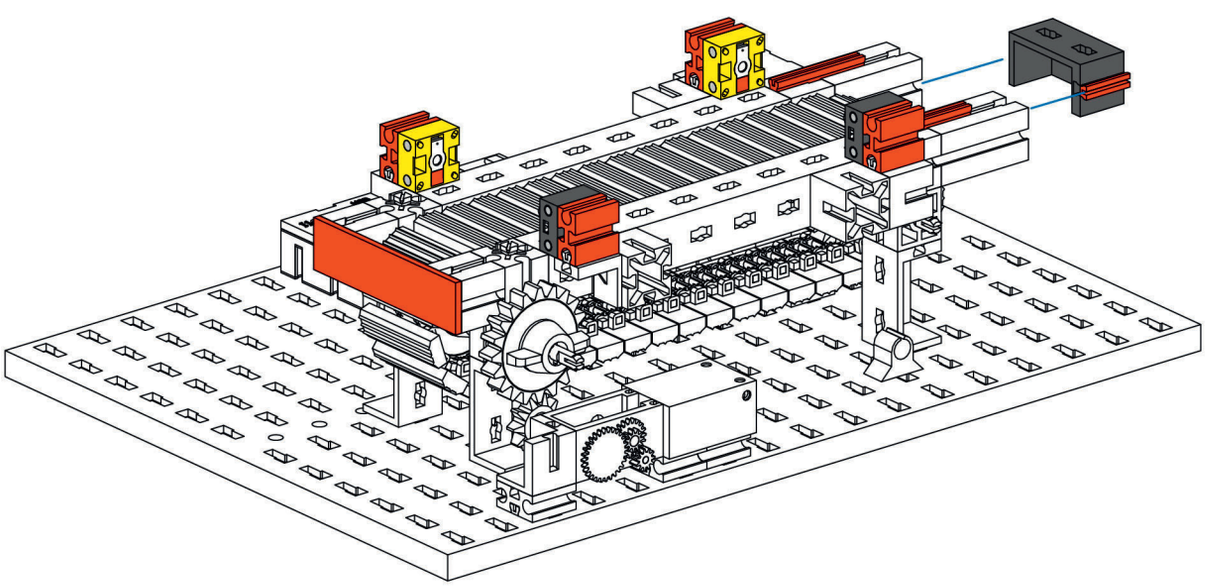

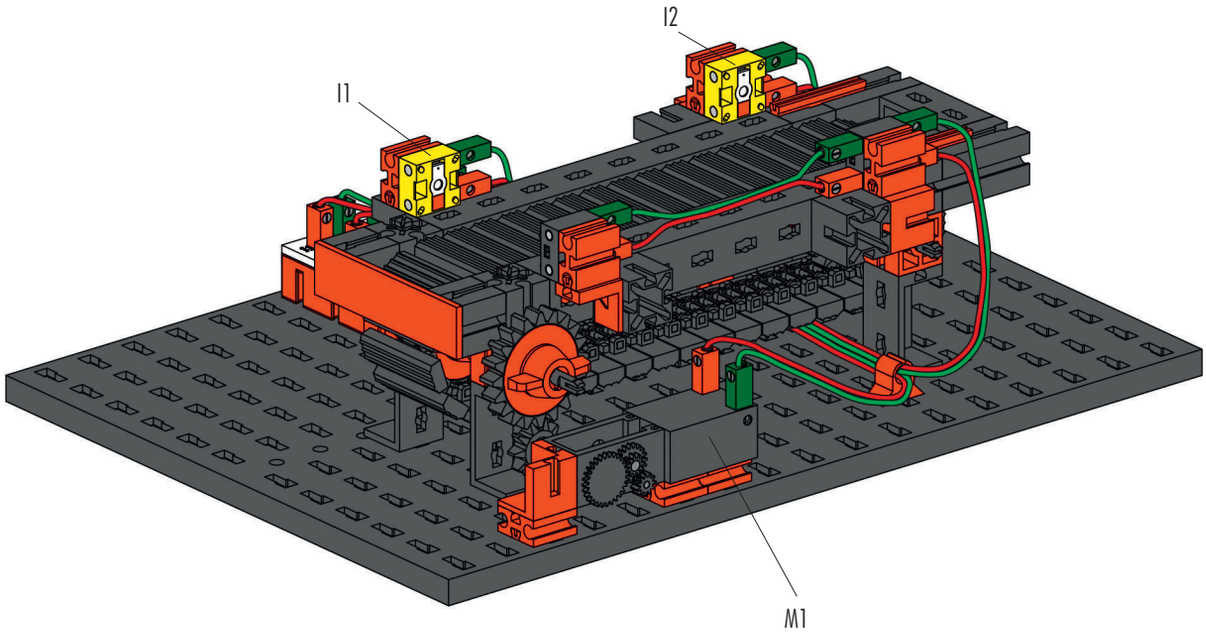

Schaltplan
Circuit diagram
Plan électrique

Schakelschema
Diagrama de circuitos
Plano elétrico de ligação

Schema elettrico
Схема подключения
电路图

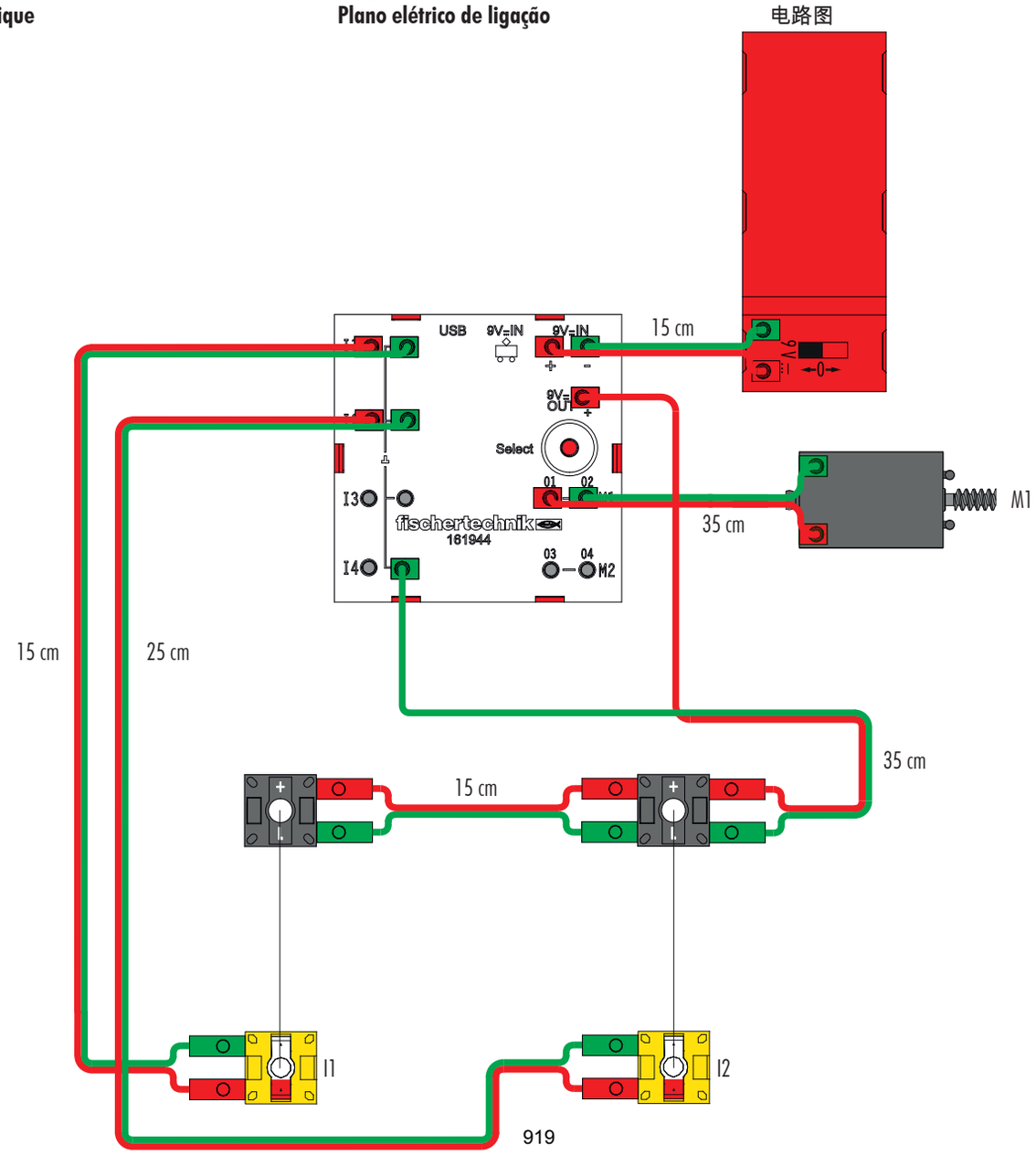

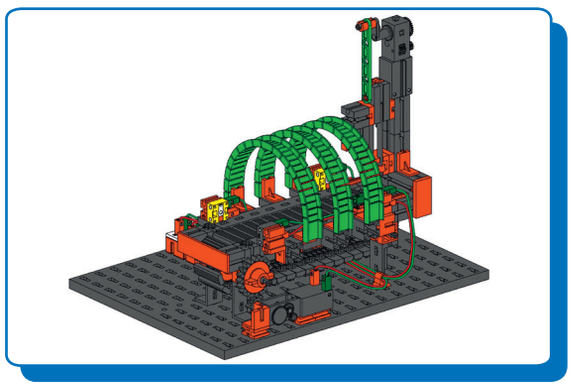

Förderband mit Stanze
Conveyor belt with punch
Bande transporteuse avec poinçon
Transportband met stans
Cinta transportadora con punzonadora
Correia transportadora com punção
Nastro trasportatore con punzonatrice
Ленточный транспортер со штамповочным прессом
带冲压机的输送带

1-13

Seite 40
Page 40
Page 40
Bladzijde 40
Página 40
Pagina 40
Pagina 40
Страница 40
页次 40

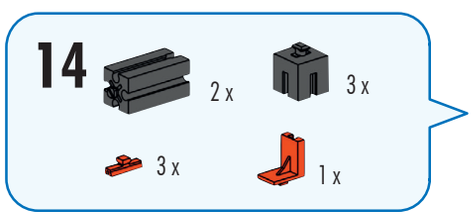

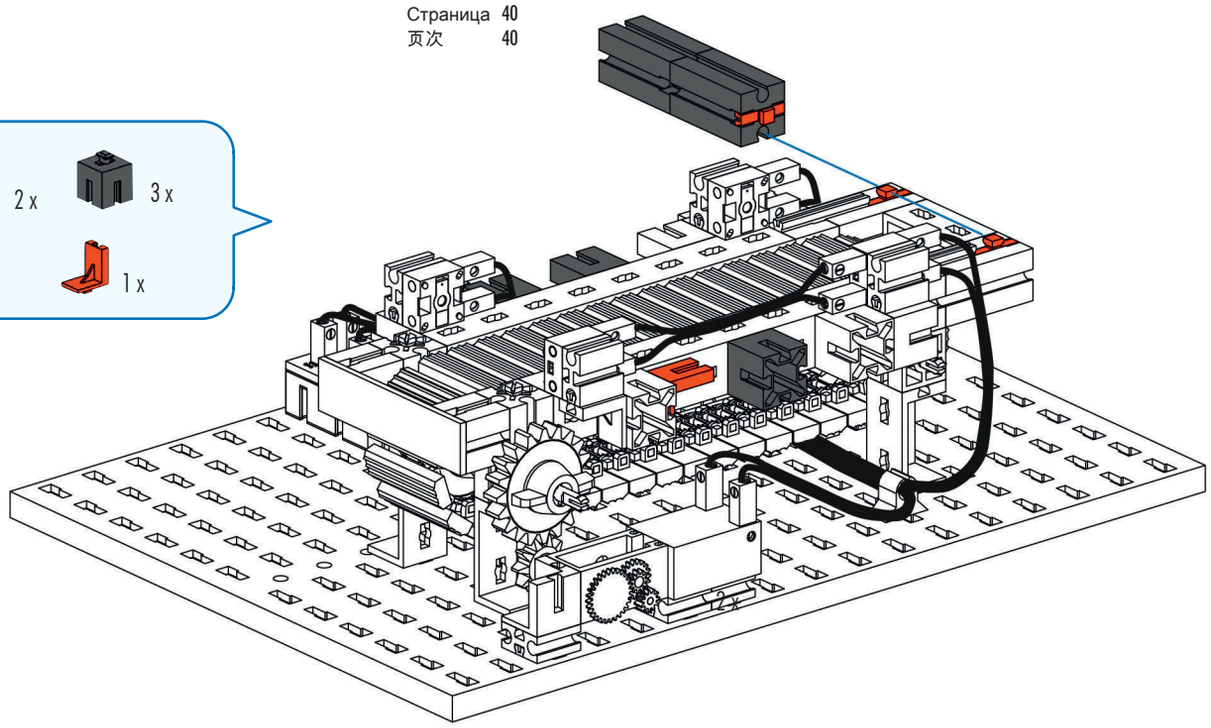

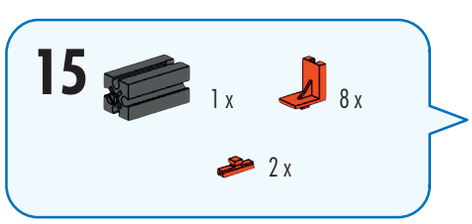

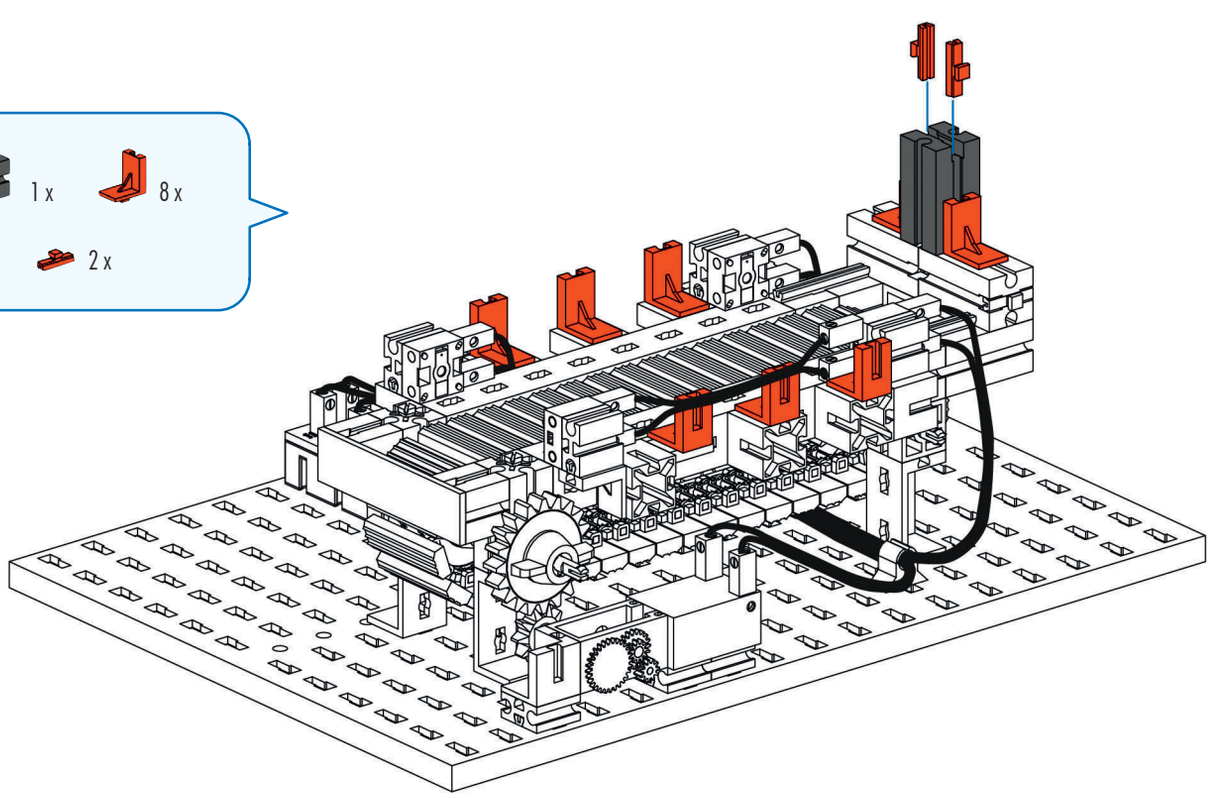

920

16

1 x 1 x 1 x 1 x 1 x 1 x 1 x 2 x

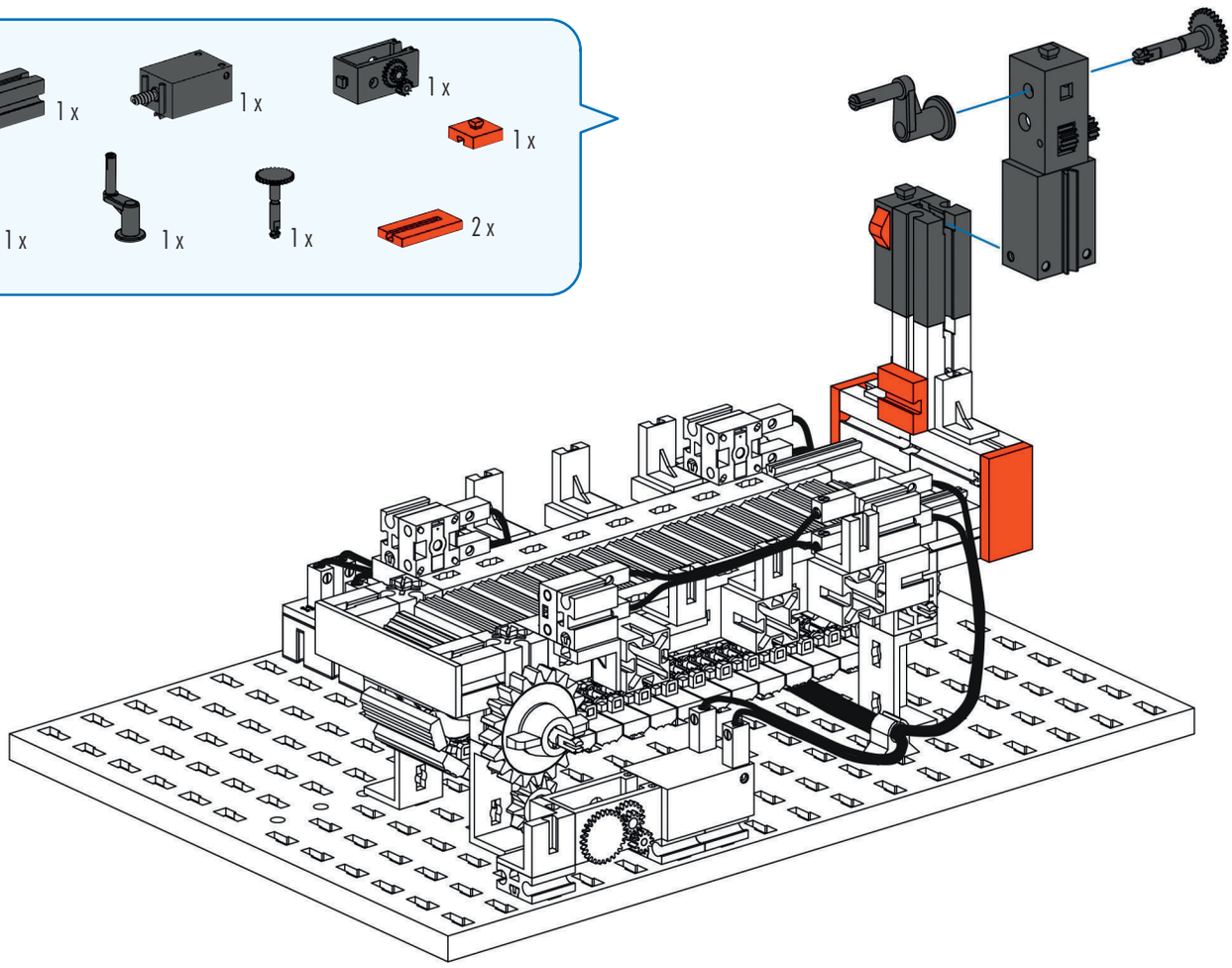

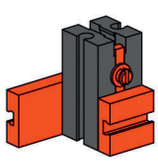

17

1 x 1 x 1 x 1 x

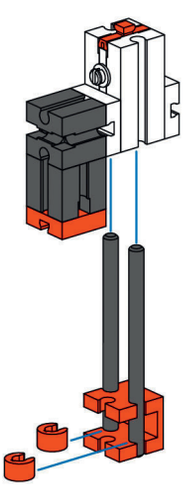

18

2 x 2 x 1 x 60 2 x 1 x 1 x

60 mm

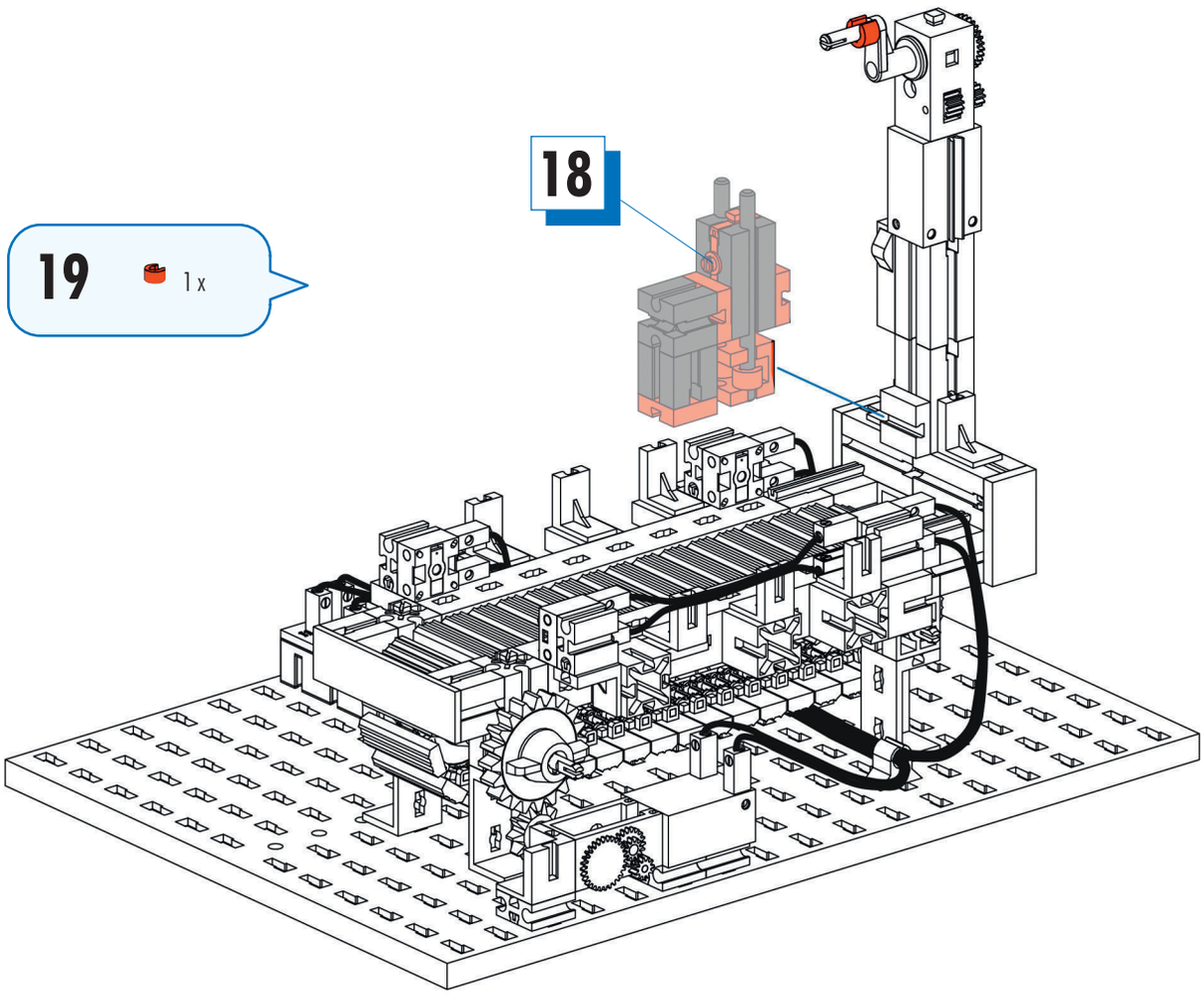
18
19
1 x

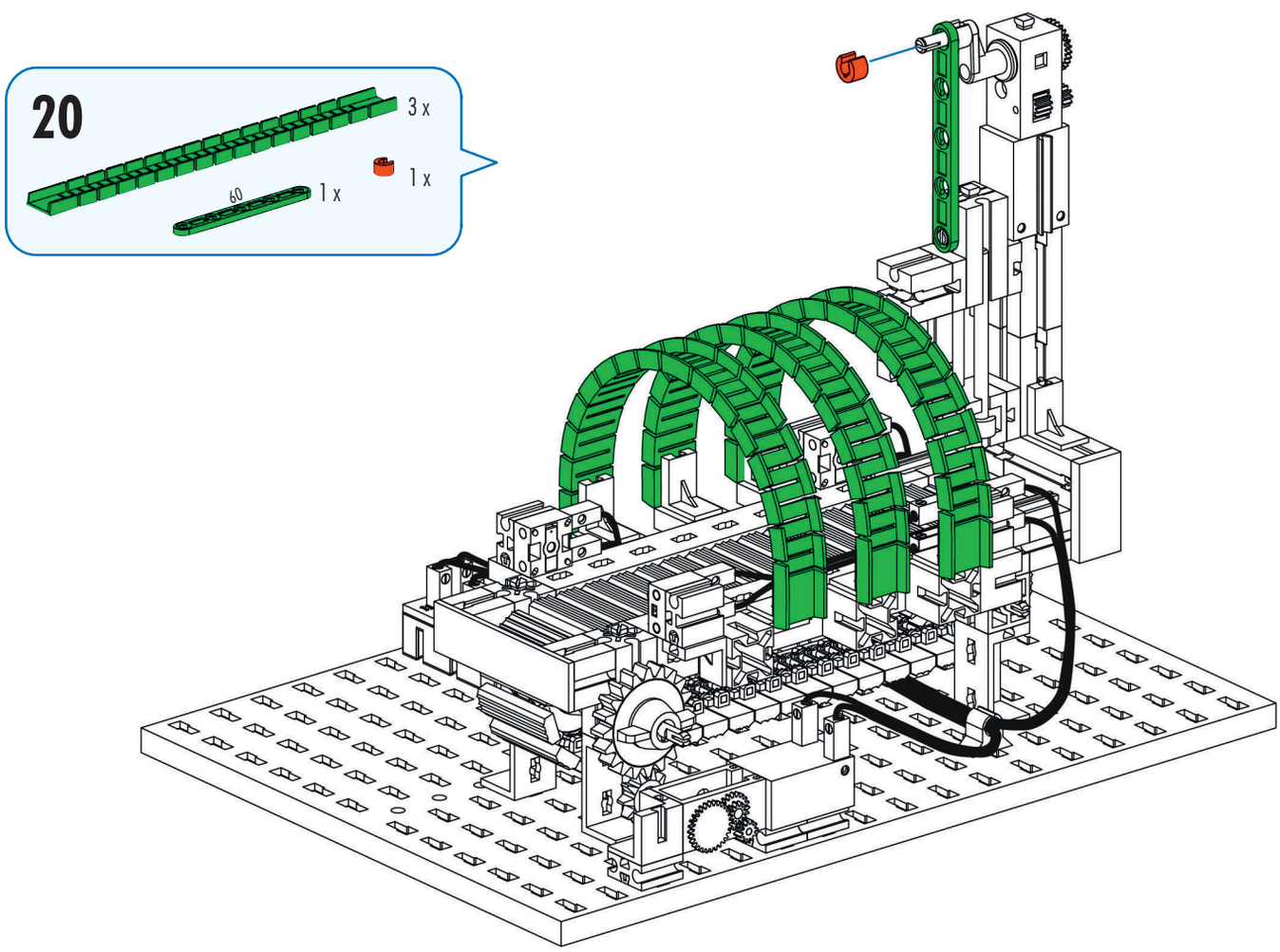
20
3 x
1 x
60
1 x

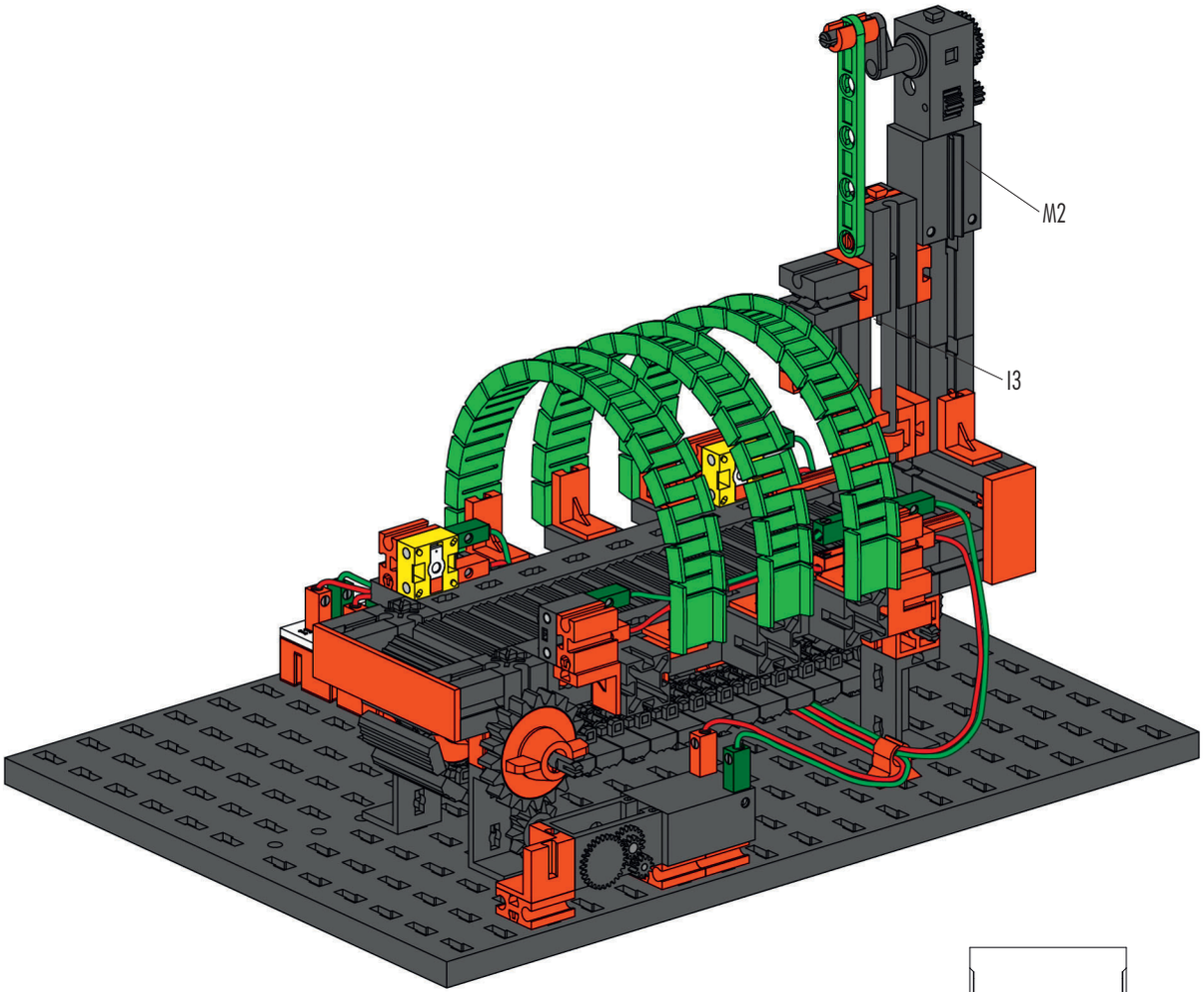

Schaltplan
Circuit diagram
Plan électrique

Schakelschema
Diagrama de circuitos
Plano elétrico de ligação

Schema elettrico
Схема подключения
电路图

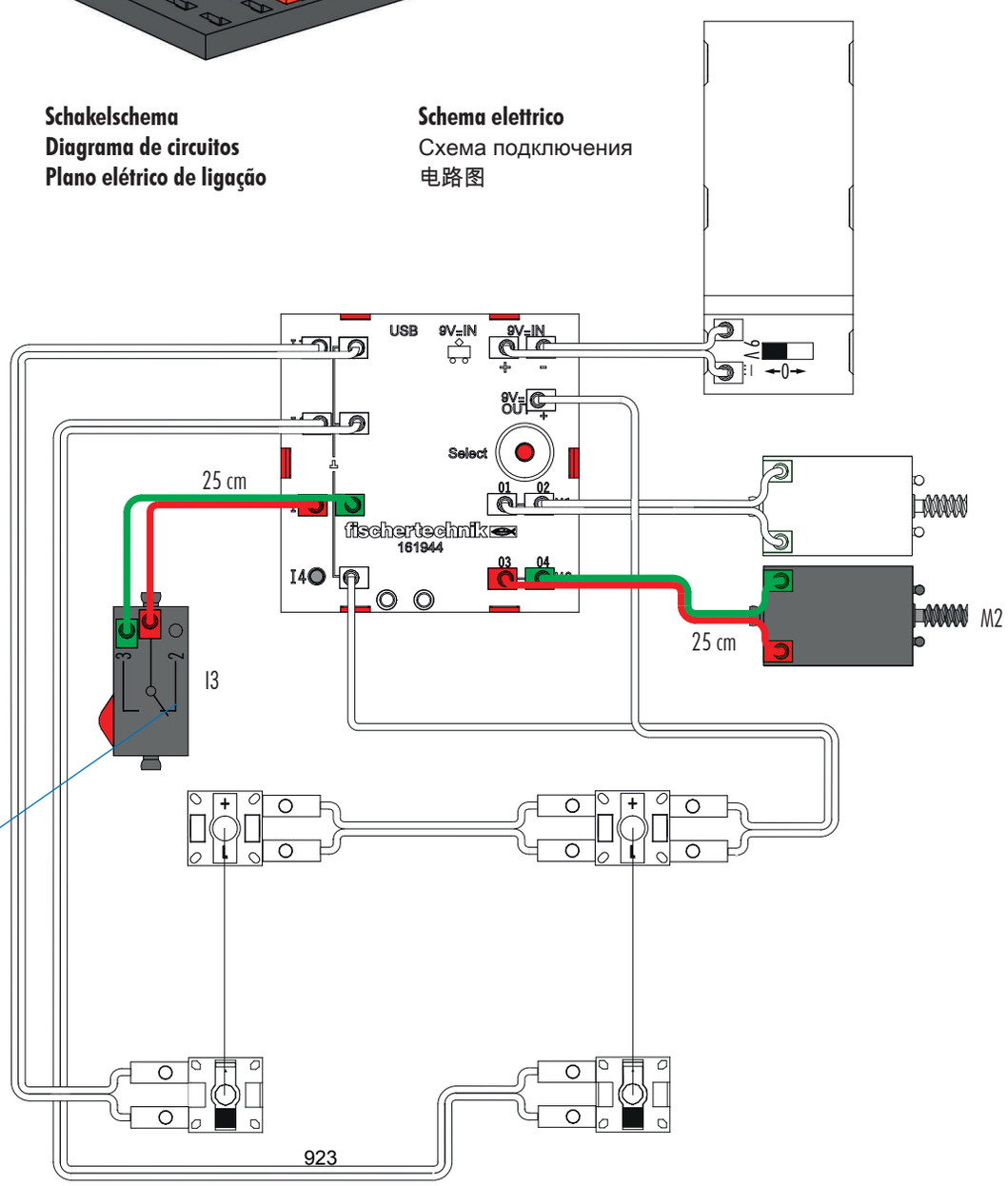

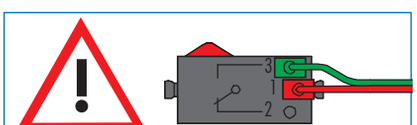

Anschlüsse 1 und 3 verwenden!
Use connections 1 and 3!
Utiliser les raccordements 1 et 3 !
Aansluitingen 1 en 3 gebruiken!
¡Emplear conexiones 1 y 3!
Utilizar as conexões 1 e 3!
Usare le connessioni 1 e 3!
Используйте контакты 1 и 3!
请使用接头 1 和 3 !

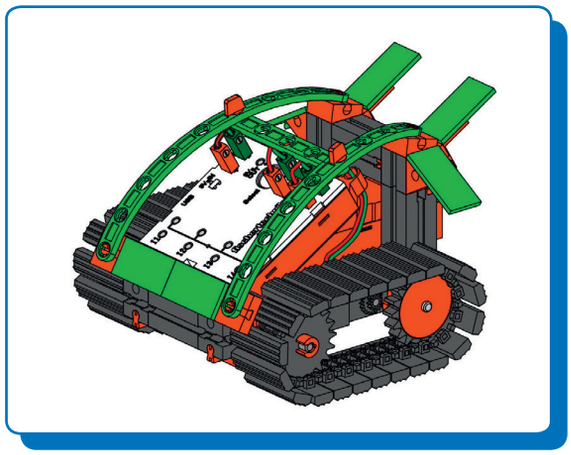

Fahrroboter
Mobile robot
Véhicule robot

Rijrobot
Robot desplazable
Robô condutor

Robot mobile
Робот-автомобиль
机器人车

1

1 x 1 x 1 x 1 x

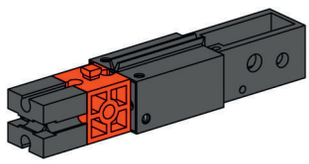

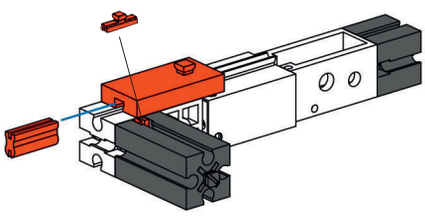

2

1 x 1 x 1 x 15 1 x 1 x

3

1 x 1 x 1 x 1 x

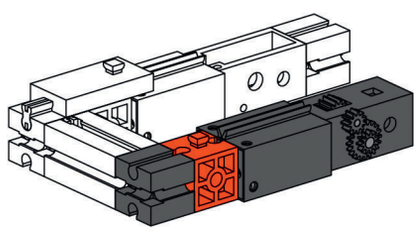

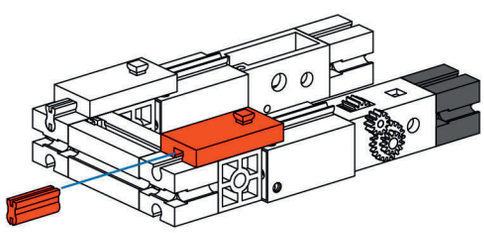

4

1 x 1 x 15 1 x

5 3 x 2 x 1 x 2 x

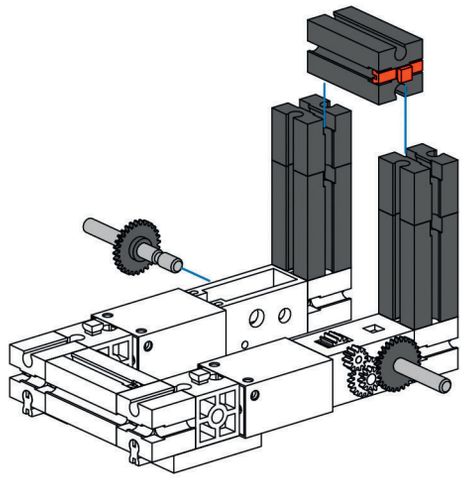

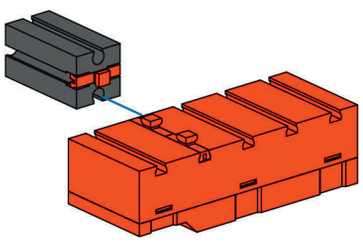

6 1 x 1 x 3 x

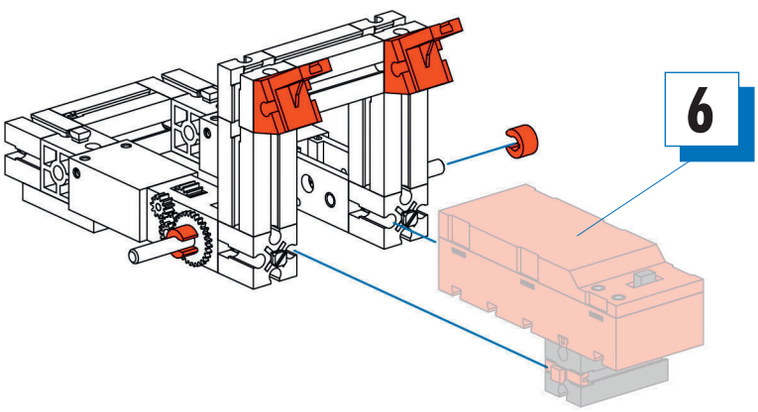

7 30° 2 x 2 x 2 x

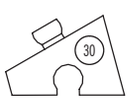

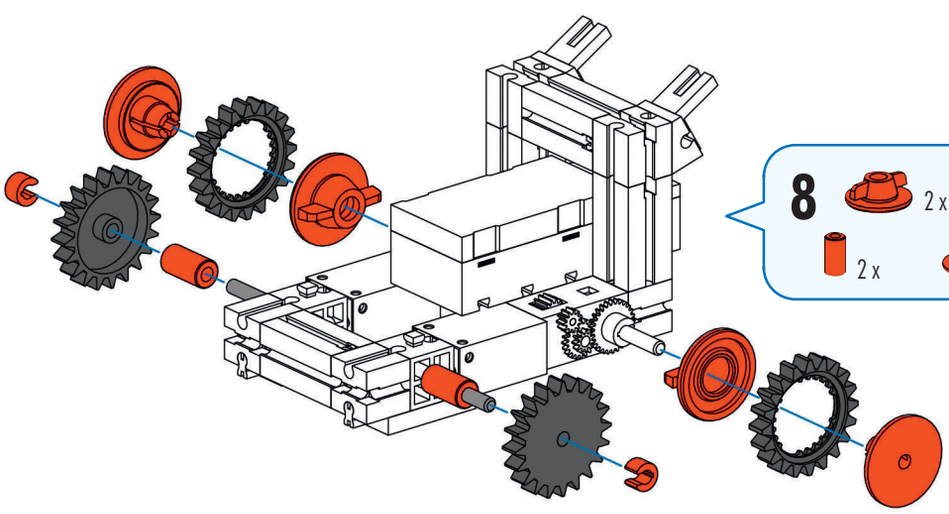

8 2 x 2 x 2 x 1 x 2 x 2 x 2 x 110 2 x

110 mm

925

9 90 x 44 x

45 x 2 x

22 x

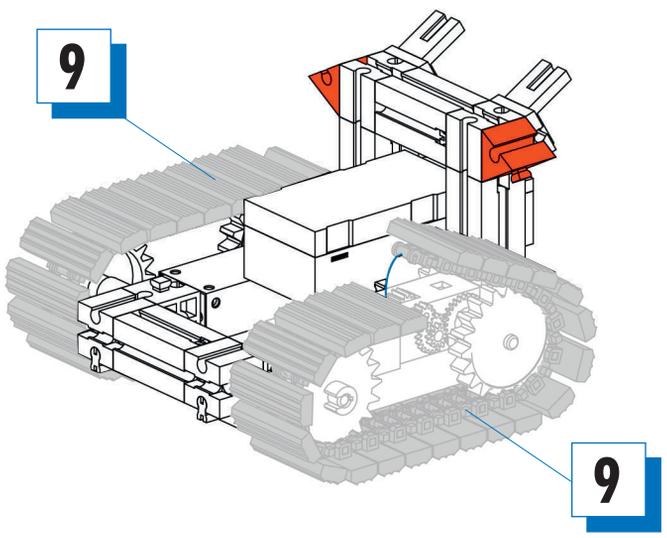

10 60° 2 x

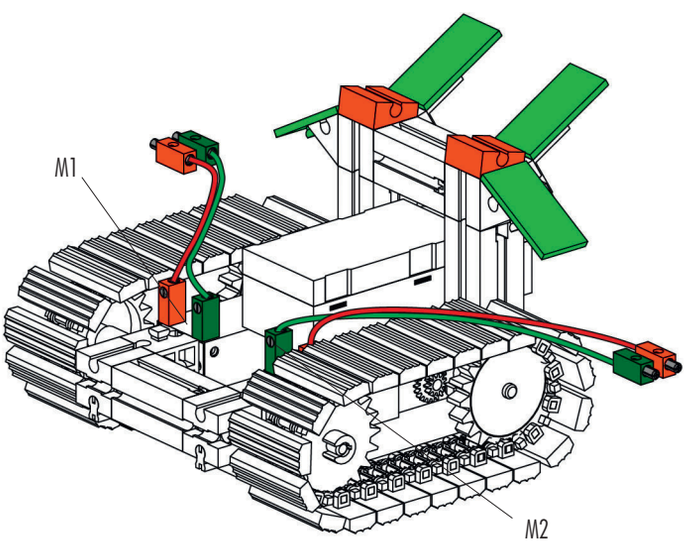

11 4 x 15° 2 x

15 cm 2 x

15

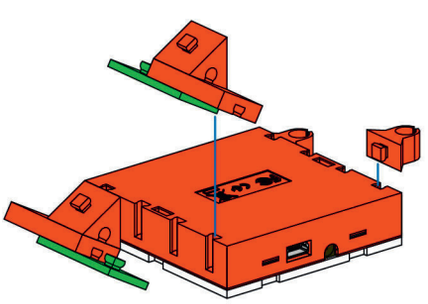

12 1 x 2 x 2 x 60° 2 x 2 x

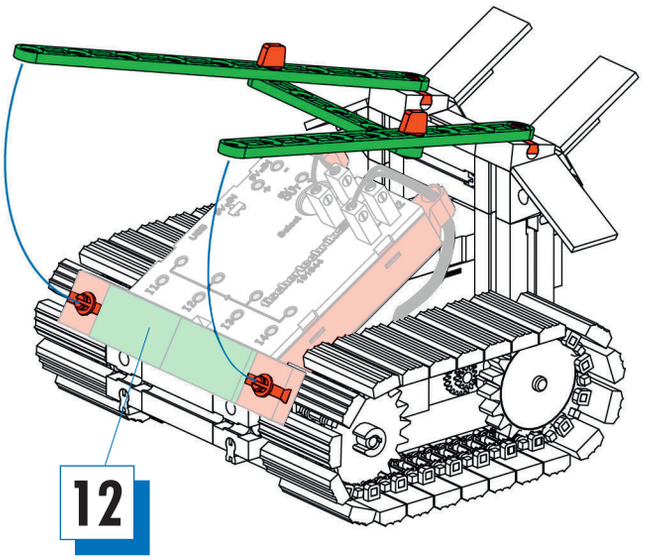

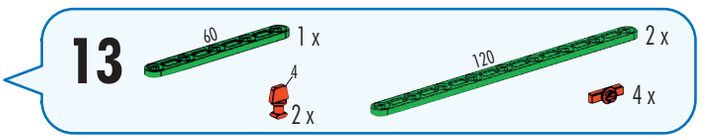

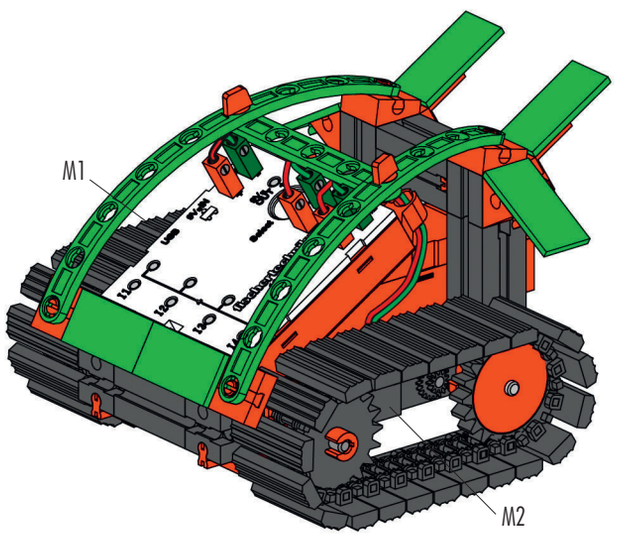

Schaltplan
Circuit diagram
Plan électrique

Schakelschema
Diagrama de circuitos
Plano elétrico de ligação

Schema elettrico
Схема подключения
电路图

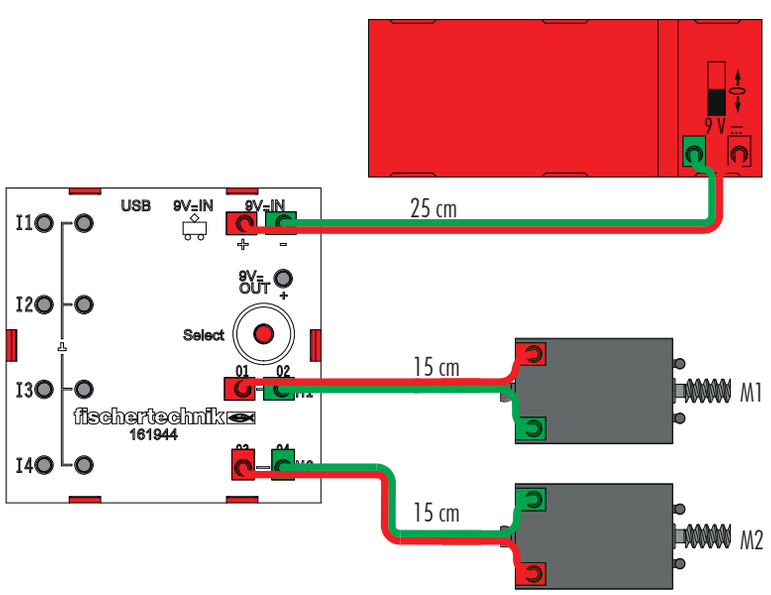

927

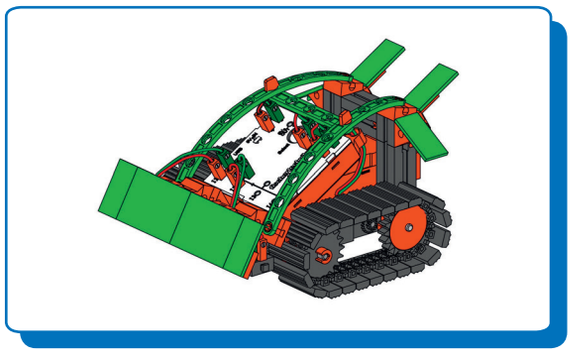

Hinderniserkenner
Hindrance detector
Détecteur d'obstacles
Obstakeldetector
Detector de obstáculos
Identificador de obstáculos
Rilevatore di ostacoli
Обнаружитель препятствий
障碍物识别车

1-11

Seite	49
Page	49
Page	49
Bladzijde	49
Página	49
Pagina	49
Pagina	49
Страница	49
页次	49

12

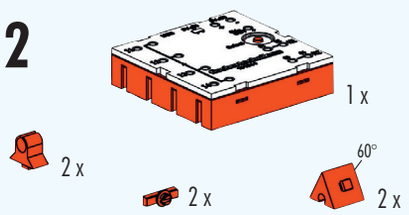

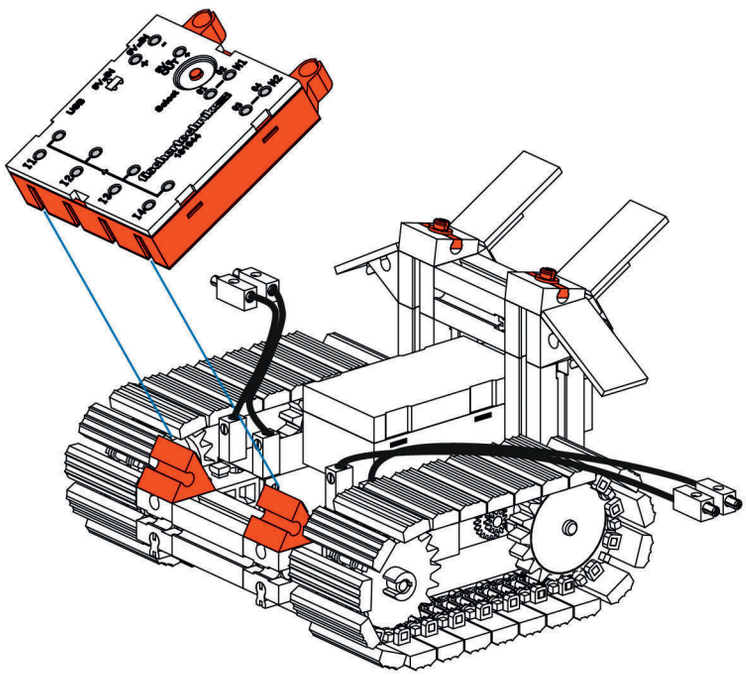

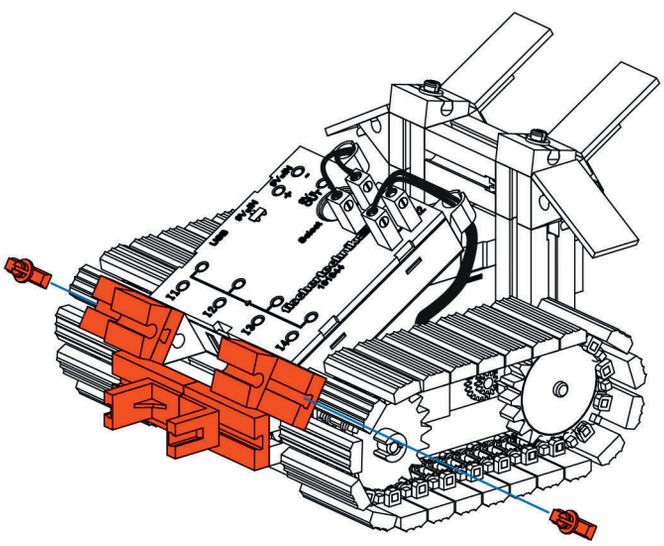

13

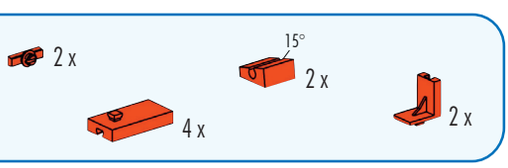

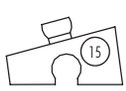

Schaltplan
Circuit diagram
Plan électrique
Schakelschema
Diagrama de circuitos
Plano elétrico de ligação
Schema elettrico
Схема подключения
电路图

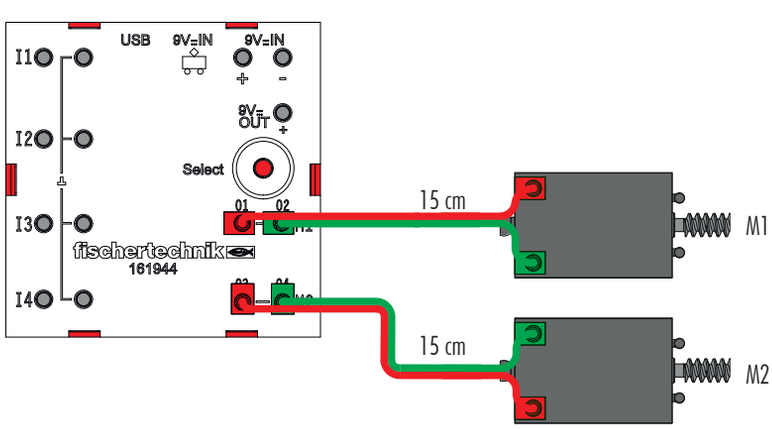

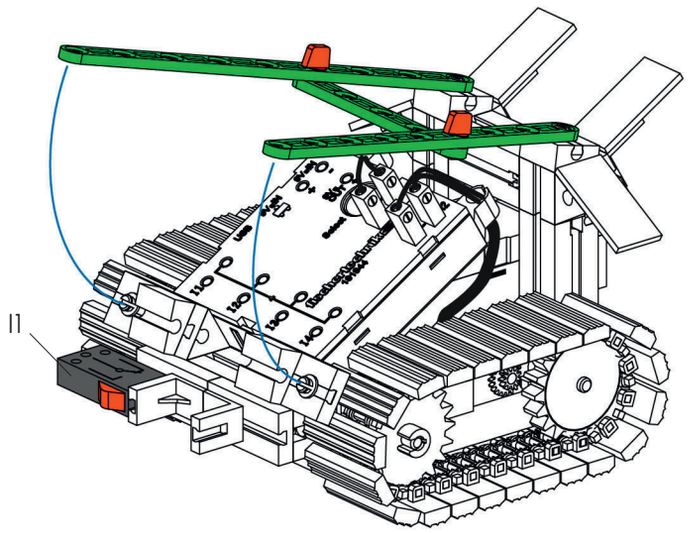
11

14

60
1 x
1 x
120
2 x
4
2 x

15

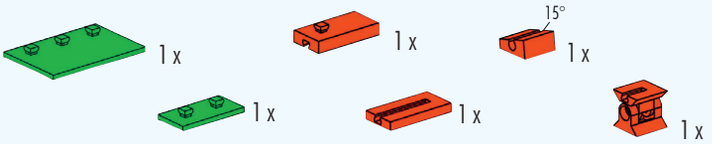
1 x
1 x
15°
1 x
1 x
1 x
1 x

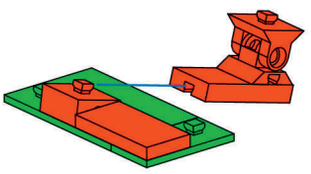

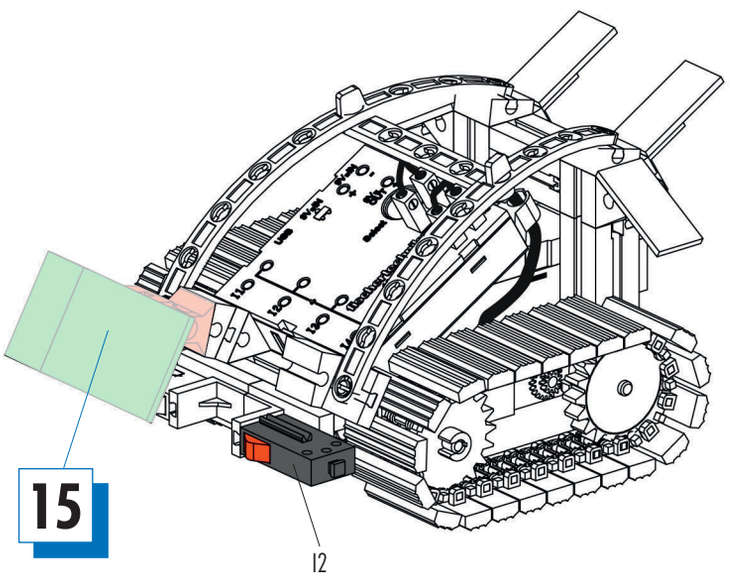
15
12

16

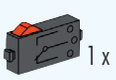
1 x

17

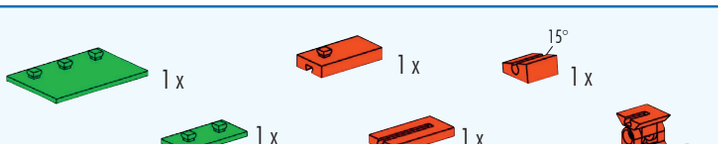
1 x
1 x
15°
1 x
1 x
1 x
1 x

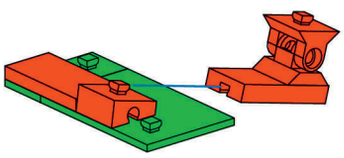

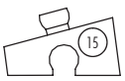
15

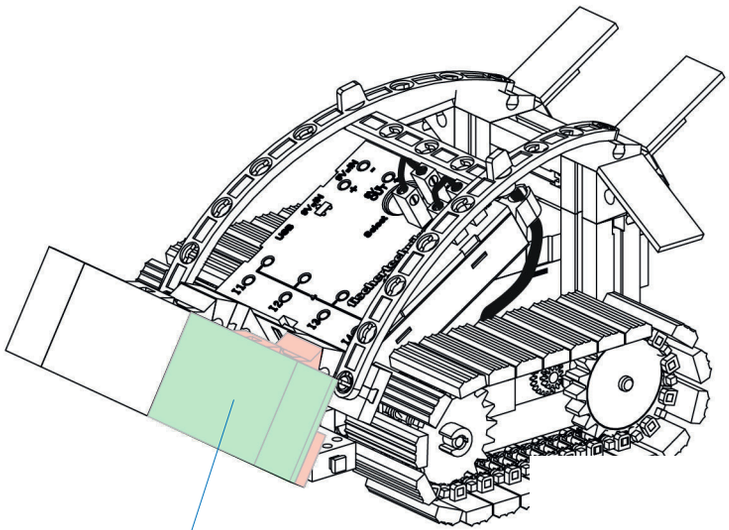

18

17

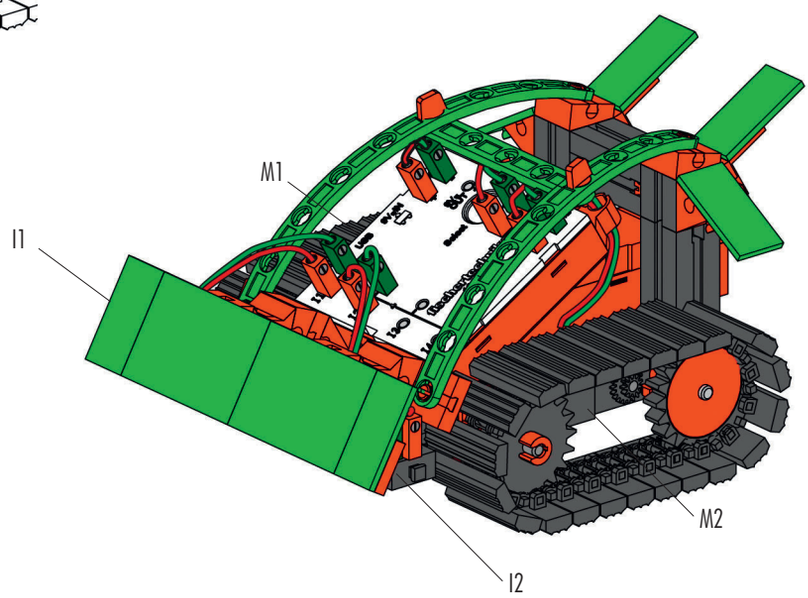

Schaltplan
Circuit diagram
Plan électrique

Schakelschema
Diagrama de circuitos
Plano elétrico de ligação

Schema elettrico
Схема подключения
电路图

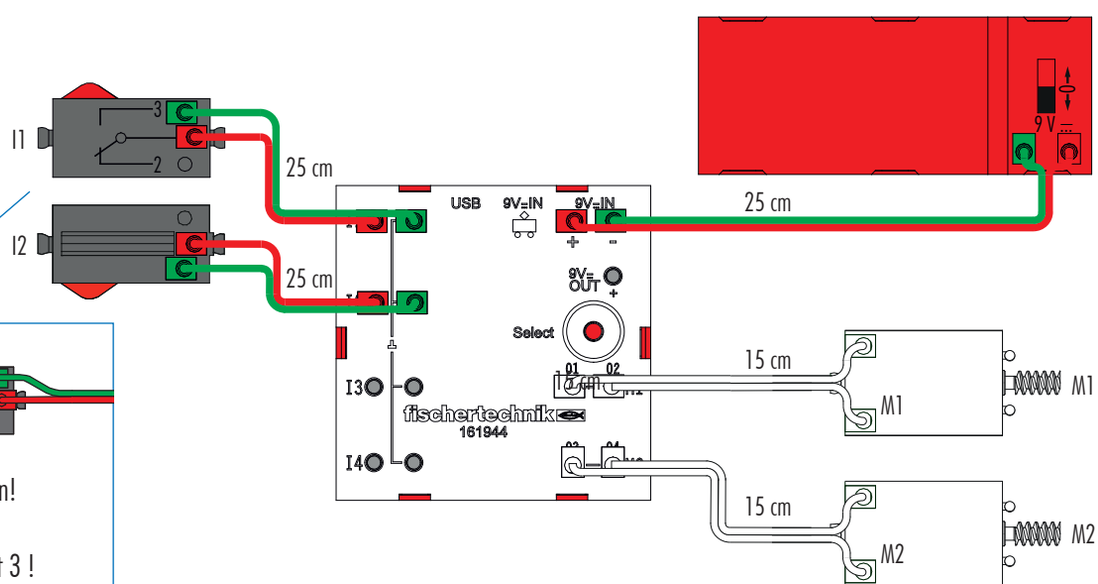

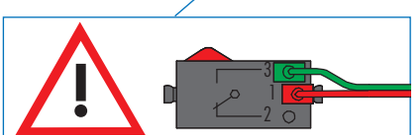

Anschlüsse 1 und 3 verwenden!
Use connections 1 and 3!
Utiliser les raccordements 1 et 3 !
Aansluitingen 1 en 3 gebruiken!
¡Emplear conexiones 1 y 3!
Utilizar as conexões 1 e 3!
Usare le connessioni 1 e 3!
Используйте контакты 1 и 3!
请使用接头 1 和 3 !

Stromversorgung
Power supply
Alimentation électrique

Stroomvoorziening
Alimentación de corriente
Alimentação elétrica

Alimentazione
Электропитание
电源供应装置
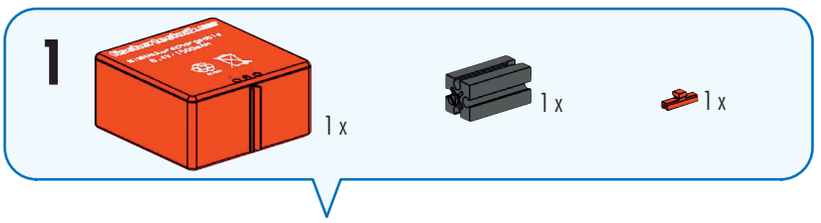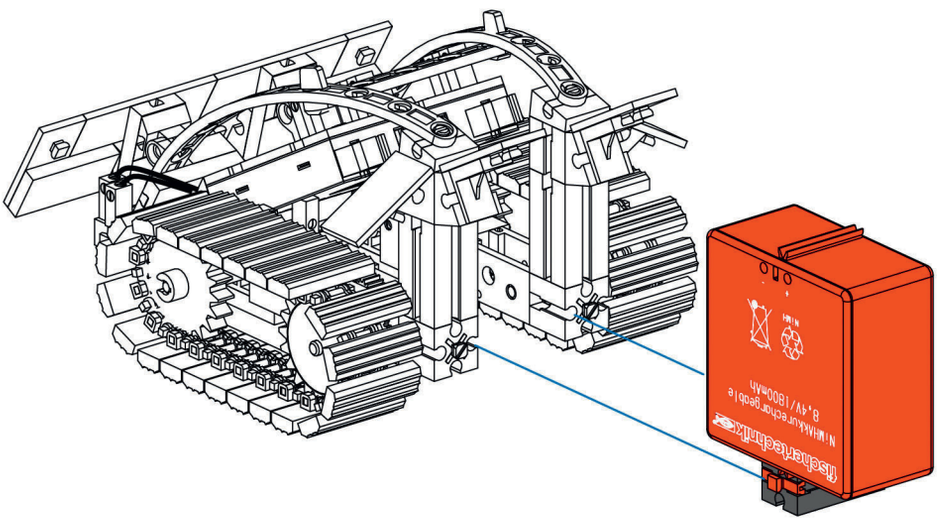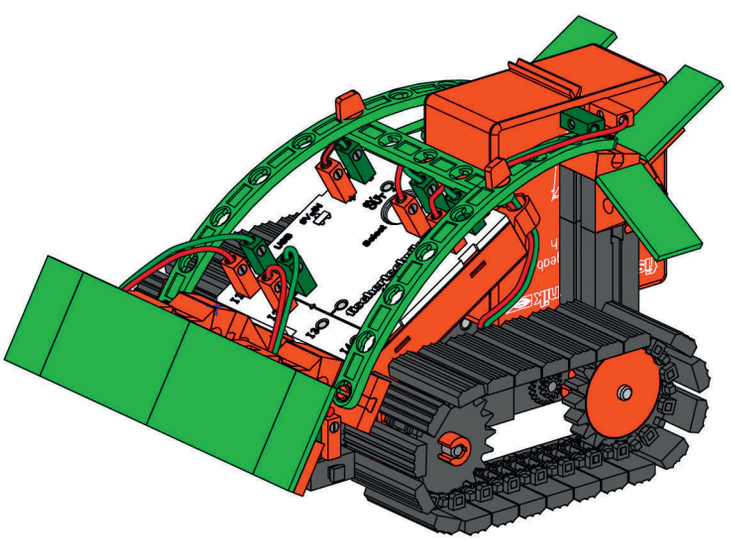
ACCU SET
34 969